US009839423B2

(12) United States Patent
Vendely et al.

(10) Patent No.: US 9,839,423 B2
(45) Date of Patent: Dec. 12, 2017

(54) **IMPLANTABLE LAYERS AND METHODS FOR MODIFYING THE SHAPE OF THE IMPLANTABLE LAYERS FOR USE WITH A SURGICAL FASTENING INSTRUMENT**

(71) Applicant: **Ethicon Endo-Surgery, Inc.**, Cincinnati, OH (US)

(72) Inventors: **Michael J. Vendely**, Lebanon, OH (US); **Mark D. Timmer**, Jersey City, NJ (US); **Jackie J. Donners**, Pennington, NJ (US); **Donald L. Reynolds, II**, West Chester, OH (US); **Taylor W. Aronhalt**, Loveland, OH (US); **Trevor J. Barton**, Cincinnati, OH (US)

(73) Assignee: **Ethicon LLC**, Guaynabo, PR (US)

(*) Notice: Subject to any disclaimer, the term of this patent is extended or adjusted under 35 U.S.C. 154(b) by 694 days.

(21) Appl. No.: **14/187,390**

(22) Filed: **Feb. 24, 2014**

(65) **Prior Publication Data**

US 2015/0238188 A1 Aug. 27, 2015

(51) **Int. Cl.**

A61B 17/04	(2006.01)
A61B 17/10	(2006.01)
A61B 17/068	(2006.01)
B29C 43/52	(2006.01)
B29C 55/00	(2006.01)

(Continued)

(52) **U.S. Cl.**

CPC ***A61B 17/068*** (2013.01); ***A61B 17/07207*** (2013.01); ***A61B 17/07292*** (2013.01); ***B29C 43/52*** (2013.01); ***B29C 55/00*** (2013.01); *A61B 17/0644* (2013.01); *A61B 2017/00004* (2013.01); *A61B 2017/00526* (2013.01);
(Continued)

(58) **Field of Classification Search**

CPC . A61L 31/146; A61L 31/04; A61B 17/07292; A61B 17/07207; A61B 2017/00004; A61B 17/068; A61B 17/105

USPC 227/175.1–182.1

See application file for complete search history.

(56) **References Cited**

U.S. PATENT DOCUMENTS

66,052	A	6/1867	Smith
662,587	A	11/1900	Blake

(Continued)

FOREIGN PATENT DOCUMENTS

AU	2008207624	A1	3/2009
AU	2010214687	A1	9/2010

(Continued)

OTHER PUBLICATIONS

U.S. Appl. No. 13/851,703, filed Mar. 27, 2013.

(Continued)

Primary Examiner — Robert Long

(57) **ABSTRACT**

A method is disclosed for altering an implantable layer for use with a surgical instrument which includes the steps of obtaining an implantable layer comprised at least partially from a material including a glass transition temperature and a melting temperature, wherein the implantable layer includes a first shape, heating the material to a temperature higher than the glass transition temperature and lower than the melting temperature, manipulating the implantable layer to a second shape different than the first shape, allowing the material to cool below the glass transition temperature, and releasing the implantable layer.

13 Claims, 39 Drawing Sheets

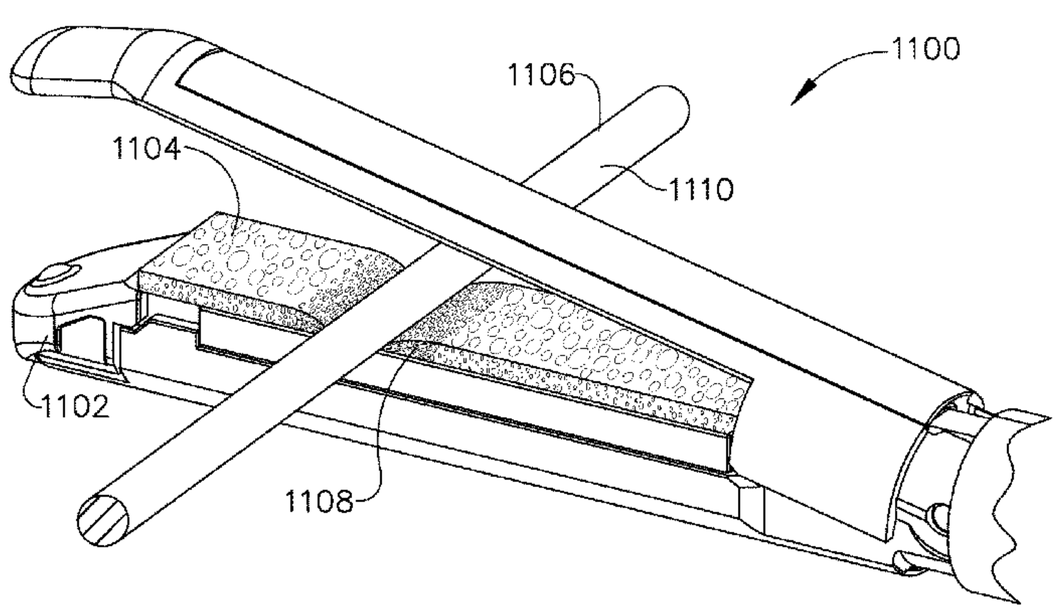

(51) **Int. Cl.**

A61B 17/072	(2006.01)
A61B 17/00	(2006.01)
A61B 17/064	(2006.01)

(52) **U.S. Cl.**

CPC *A61B 2017/07242* (2013.01); *A61B 2017/07278* (2013.01); *A61B 2017/07285* (2013.01)

(56) **References Cited**

U.S. PATENT DOCUMENTS

670,748	A	3/1901	Weddeler
951,393	A	3/1910	Hahn
1,306,107	A	6/1919	Elliott
1,314,601	A	9/1919	McCaskey
1,677,337	A	7/1928	Grove
1,794,907	A	3/1931	Kelly
2,037,727	A	4/1936	La Chapelle
2,132,295	A	10/1938	Hawkins
2,161,632	A	6/1939	Nattenheimer
2,211,117	A	8/1940	Hess
2,214,870	A	9/1940	West
2,318,379	A	5/1943	Davis et al.
2,329,440	A	9/1943	La Place
2,441,096	A	5/1948	Happe
2,448,741	A	9/1948	Scott et al.
2,450,527	A	10/1948	Smith et al.
2,526,902	A	10/1950	Rublee
2,527,256	A	10/1950	Jackson
2,578,686	A	12/1951	Fish
2,674,149	A	4/1954	Benson
2,711,461	A	6/1955	Happe
2,804,848	A	9/1957	O'Farrell et al.
2,808,482	A	10/1957	Zanichkowsky et al.
2,853,074	A	9/1958	Olson
2,887,004	A	5/1959	Stewart
2,959,974	A	11/1960	Emrick
3,032,769	A	5/1962	Palmer
3,075,062	A	1/1963	Iaccarino
3,078,465	A	2/1963	Bobrov
3,079,606	A	3/1963	Bobrov et al.
3,166,072	A	1/1965	Sullivan, Jr.
3,196,869	A	7/1965	Scholl
3,204,731	A	9/1965	Bent et al.
3,266,494	A	8/1966	Brownrigg et al.
3,269,630	A	8/1966	Fleischer
3,275,211	A	9/1966	Hirsch et al.
3,317,103	A	5/1967	Cullen et al.
3,317,105	A	5/1967	Astafjev et al.
3,357,296	A	12/1967	Lefever
3,490,675	A	1/1970	Green et al.
3,494,533	A	2/1970	Green et al.
3,499,591	A	3/1970	Green
3,503,396	A	3/1970	Pierie et al.
3,551,987	A	1/1971	Wilkinson
3,568,675	A	3/1971	Harvey
3,572,159	A	3/1971	Tschanz
3,583,393	A	6/1971	Takahashi
3,598,943	A	8/1971	Barrett
3,608,549	A	9/1971	Merrill
3,640,317	A	2/1972	Panfili
3,643,851	A	2/1972	Green et al.
3,661,666	A	5/1972	Foster et al.
3,662,939	A	5/1972	Bryan
3,695,646	A	10/1972	Mommsen
3,709,221	A	1/1973	Riely
3,717,294	A	2/1973	Green
3,734,207	A	5/1973	Fishbein
3,740,994	A	6/1973	DeCarlo, Jr.
3,744,495	A	7/1973	Johnson
3,746,002	A	7/1973	Haller
3,751,902	A	8/1973	Kingsbury et al.
3,799,151	A	3/1974	Fukaumi et al.
3,819,100	A	6/1974	Noiles et al.
3,821,919	A	7/1974	Knohl
3,841,474	A	10/1974	Maier
3,851,196	A	11/1974	Hinds
3,885,491	A	5/1975	Curtis
3,892,228	A	7/1975	Mitsui
3,894,174	A	7/1975	Cartun
3,940,844	A	3/1976	Colby et al.
3,950,686	A	4/1976	Randall
3,955,581	A	5/1976	Spasiano et al.
RE28,932	E	8/1976	Noiles et al.
3,981,051	A	9/1976	Brumlik
4,054,108	A	10/1977	Gill
4,060,089	A	11/1977	Noiles
4,106,446	A	8/1978	Yamada et al.
4,111,206	A	9/1978	Vishnevsky et al.
4,129,059	A	12/1978	Van Eck
4,169,990	A	10/1979	Lerdman
4,180,285	A	12/1979	Reneau
4,198,734	A	4/1980	Brumlik
4,198,982	A	4/1980	Fortner et al.
4,207,898	A	6/1980	Becht
4,213,562	A	7/1980	Garrett et al.
4,226,242	A	10/1980	Jarvik
4,244,372	A	1/1981	Kapitanov et al.
4,250,436	A	2/1981	Weissman
4,261,244	A	4/1981	Becht et al.
4,272,002	A	6/1981	Moshofsky
4,272,662	A	6/1981	Simpson
4,274,304	A	6/1981	Curtiss
4,275,813	A	6/1981	Noiles
4,289,133	A	9/1981	Rothfuss
4,296,654	A	10/1981	Mercer
4,304,236	A	12/1981	Conta et al.
4,305,539	A	12/1981	Korolkov et al.
4,312,685	A	1/1982	Riedl
4,317,451	A	3/1982	Cerwin et al.
4,321,002	A	3/1982	Froehlich
4,328,839	A	5/1982	Lyons et al.
4,331,277	A	5/1982	Green
4,340,331	A	7/1982	Savino
4,347,450	A	8/1982	Colligan
4,349,028	A	9/1982	Green
4,353,371	A	10/1982	Cosman
4,373,147	A	2/1983	Carlson, Jr.
4,379,457	A	4/1983	Gravener et al.
4,380,312	A	4/1983	Landrus
4,382,326	A	5/1983	Rabuse
4,383,634	A	5/1983	Green
4,393,728	A	7/1983	Larson et al.
4,396,139	A	8/1983	Hall et al.
4,397,311	A	8/1983	Kanshin et al.
4,402,445	A	9/1983	Green
4,408,692	A	10/1983	Sigel et al.
4,409,057	A	10/1983	Molenda et al.
4,415,112	A	11/1983	Green
4,416,276	A	11/1983	Newton et al.
4,428,376	A	1/1984	Mericle
4,429,695	A	2/1984	Green
4,434,796	A	3/1984	Karapetian et al.
4,438,659	A	3/1984	Desplats
4,442,964	A	4/1984	Becht
4,448,194	A	5/1984	DiGiovanni et al.
4,451,743	A	5/1984	Suzuki et al.
4,454,887	A	6/1984	Krüger
4,467,805	A	8/1984	Fukuda
4,470,414	A	9/1984	Imagawa et al.
4,473,077	A	9/1984	Noiles et al.
4,475,679	A	10/1984	Fleury, Jr.
4,485,816	A	12/1984	Krumme
4,485,817	A	12/1984	Swiggett
4,486,928	A	12/1984	Tucker et al.
4,488,523	A	12/1984	Shichman
4,489,875	A	12/1984	Crawford et al.
4,499,895	A	2/1985	Takayama
4,500,024	A	2/1985	DiGiovanni et al.
4,505,272	A	3/1985	Utyamyshev et al.
4,505,273	A	3/1985	Braun et al.
4,505,414	A	3/1985	Filipi
4,506,671	A	3/1985	Green
4,512,038	A	4/1985	Alexander et al.

(56) **References Cited**

U.S. PATENT DOCUMENTS

4,520,817 A 6/1985 Green
4,522,327 A 6/1985 Korthoff et al.
4,526,174 A 7/1985 Froehlich
4,527,724 A 7/1985 Chow et al.
4,530,453 A 7/1985 Green
4,531,522 A 7/1985 Bedi et al.
4,532,927 A 8/1985 Miksza, Jr.
4,548,202 A 10/1985 Duncan
4,565,109 A 1/1986 Tsay
4,565,189 A 1/1986 Mabuchi
4,566,620 A 1/1986 Green et al.
4,569,469 A 2/1986 Mongeon et al.
4,571,213 A 2/1986 Ishimoto
4,573,468 A 3/1986 Conta et al.
4,573,469 A 3/1986 Golden et al.
4,573,622 A 3/1986 Green et al.
4,576,167 A 3/1986 Noiles et al.
4,580,712 A 4/1986 Green
4,585,153 A 4/1986 Failla et al.
4,589,416 A 5/1986 Green
4,591,085 A 5/1986 Di Giovanni
4,597,753 A 7/1986 Turley
4,600,037 A 7/1986 Hatten
4,604,786 A 8/1986 Howie, Jr.
4,605,001 A 8/1986 Rothfuss et al.
4,605,004 A 8/1986 Di Giovanni et al.
4,606,343 A 8/1986 Conta et al.
4,607,638 A 8/1986 Crainich
4,608,981 A 9/1986 Rothfuss et al.
4,610,250 A 9/1986 Green
4,610,383 A 9/1986 Rothfuss et al.
4,619,262 A 10/1986 Taylor
4,619,391 A 10/1986 Sharkany et al.
4,628,459 A 12/1986 Shinohara et al.
4,629,107 A 12/1986 Fedotov et al.
4,632,290 A 12/1986 Green et al.
4,633,874 A 1/1987 Chow et al.
4,634,419 A 1/1987 Kreizman et al.
4,641,076 A 2/1987 Linden
4,643,731 A 2/1987 Eckenhoff
4,646,722 A 3/1987 Silverstein et al.
4,655,222 A 4/1987 Florez et al.
4,662,555 A 5/1987 Thornton
4,663,874 A 5/1987 Sano et al.
4,664,305 A 5/1987 Blake, III et al.
4,665,916 A 5/1987 Green
4,667,674 A 5/1987 Korthoff et al.
4,669,647 A 6/1987 Storace
4,671,445 A 6/1987 Barker et al.
4,676,245 A 6/1987 Fukuda
4,684,051 A 8/1987 Akopov et al.
4,691,703 A 9/1987 Auth et al.
4,693,248 A 9/1987 Failla
4,700,703 A 10/1987 Resnick et al.
4,708,141 A 11/1987 Inoue et al.
4,709,120 A 11/1987 Pearson
4,715,520 A 12/1987 Roehr, Jr. et al.
4,719,917 A 1/1988 Barrows et al.
4,727,308 A 2/1988 Huljak et al.
4,728,020 A 3/1988 Green et al.
4,728,876 A 3/1988 Mongeon et al.
4,729,260 A 3/1988 Dudden
4,730,726 A 3/1988 Holzwarth
4,741,336 A 5/1988 Failla et al.
4,743,214 A 5/1988 Tai-Cheng
4,747,820 A 5/1988 Hornlein et al.
4,750,902 A 6/1988 Wuchinich et al.
4,752,024 A 6/1988 Green et al.
4,754,909 A 7/1988 Barker et al.
4,767,044 A 8/1988 Green
4,773,420 A 9/1988 Green
4,777,780 A 10/1988 Holzwarth
4,787,387 A 11/1988 Burbank, III et al.
4,790,225 A 12/1988 Moody et al.
4,805,617 A 2/1989 Bedi et al.
4,805,823 A 2/1989 Rothfuss
4,809,695 A 3/1989 Gwathmey et al.
4,815,460 A 3/1989 Porat et al.
4,817,847 A 4/1989 Redtenbacher et al.
4,819,853 A 4/1989 Green
4,821,939 A 4/1989 Green
4,827,911 A 5/1989 Broadwin et al.
4,830,855 A 5/1989 Stewart
4,834,720 A 5/1989 Blinkhorn
4,844,068 A 7/1989 Arata et al.
4,848,637 A 7/1989 Pruitt
4,856,078 A 8/1989 Konopka
4,865,030 A 9/1989 Polyak
4,868,530 A 9/1989 Ahs
4,869,414 A 9/1989 Green et al.
4,869,415 A 9/1989 Fox
4,873,977 A 10/1989 Avant et al.
4,875,486 A 10/1989 Rapoport et al.
4,880,015 A 11/1989 Nierman
4,890,613 A 1/1990 Golden et al.
4,892,244 A 1/1990 Fox et al.
4,893,622 A 1/1990 Green et al.
4,896,678 A 1/1990 Ogawa
4,900,303 A 2/1990 Lemelson
4,903,697 A 2/1990 Resnick et al.
4,915,100 A 4/1990 Green
4,930,503 A 6/1990 Pruitt
4,930,674 A 6/1990 Barak
4,931,047 A 6/1990 Broadwin et al.
4,932,960 A 6/1990 Green et al.
4,933,843 A 6/1990 Scheller et al.
4,938,408 A 7/1990 Bedi et al.
4,941,623 A 7/1990 Pruitt
4,943,182 A 7/1990 Hoblingre
4,944,443 A 7/1990 Oddsen et al.
4,951,860 A 8/1990 Peters et al.
4,955,959 A 9/1990 Tompkins et al.
4,965,709 A 10/1990 Ngo
4,973,274 A 11/1990 Hirukawa
4,978,049 A 12/1990 Green
4,978,333 A 12/1990 Broadwin et al.
4,986,808 A 1/1991 Broadwin et al.
4,988,334 A 1/1991 Hornlein et al.
5,002,543 A 3/1991 Bradshaw et al.
5,002,553 A 3/1991 Shiber
5,005,754 A 4/1991 Van Overloop
5,009,661 A 4/1991 Michelson
5,014,899 A 5/1991 Presty et al.
5,015,227 A 5/1991 Broadwin et al.
5,018,515 A 5/1991 Gilman
5,018,657 A 5/1991 Pedlick et al.
5,024,671 A 6/1991 Tu et al.
5,027,834 A 7/1991 Pruitt
5,031,814 A 7/1991 Tompkins et al.
5,035,040 A 7/1991 Kerrigan et al.
5,038,109 A 8/1991 Goble et al.
5,040,715 A 8/1991 Green et al.
5,042,707 A 8/1991 Taheri
5,061,269 A 10/1991 Muller
5,062,563 A 11/1991 Green et al.
5,065,929 A 11/1991 Schulze et al.
5,071,052 A 12/1991 Rodak et al.
5,071,430 A 12/1991 de Salis et al.
5,074,454 A 12/1991 Peters
5,079,006 A 1/1992 Urquhart
5,080,556 A 1/1992 Carreno
5,083,695 A 1/1992 Foslien et al.
5,084,057 A 1/1992 Green et al.
5,088,979 A 2/1992 Filipi et al.
5,088,997 A 2/1992 Delahuerga et al.
5,094,247 A 3/1992 Hernandez et al.
5,100,420 A 3/1992 Green et al.
5,104,025 A 4/1992 Main et al.
5,104,397 A 4/1992 Vasconcelos et al.
5,106,008 A 4/1992 Tompkins et al.
5,108,368 A 4/1992 Hammerslag et al.
5,111,987 A 5/1992 Moeinzadeh et al.
5,116,349 A 5/1992 Aranyi
5,122,156 A 6/1992 Granger et al.

(56) **References Cited**

U.S. PATENT DOCUMENTS

5,124,990	A	6/1992	Williamson
5,129,570	A	7/1992	Schulze et al.
5,137,198	A	8/1992	Nobis et al.
5,139,513	A	8/1992	Segato
5,141,144	A	8/1992	Foslien et al.
5,142,932	A	9/1992	Moya et al.
5,155,941	A	10/1992	Takahashi et al.
5,156,315	A	10/1992	Green et al.
5,156,609	A	10/1992	Nakao et al.
5,156,614	A	10/1992	Green et al.
5,158,567	A	10/1992	Green
330,699	A	11/1992	Gill
5,163,598	A	11/1992	Peters et al.
5,171,247	A	12/1992	Hughett et al.
5,171,249	A	12/1992	Stefanchik et al.
5,171,253	A	12/1992	Klieman et al.
5,188,111	A	2/1993	Yates et al.
5,190,517	A	3/1993	Zieve et al.
5,190,544	A	3/1993	Chapman et al.
5,190,560	A	3/1993	Woods et al.
5,192,288	A	3/1993	Thompson et al.
5,195,968	A	3/1993	Lundquist et al.
5,197,648	A	3/1993	Gingold
5,197,649	A	3/1993	Bessler et al.
5,197,966	A	3/1993	Sommerkamp
5,200,280	A	4/1993	Karasa
5,205,459	A	4/1993	Brinkerhoff et al.
5,207,697	A	5/1993	Carusillo et al.
5,209,747	A	5/1993	Knoepfler
5,211,649	A	5/1993	Kohler et al.
5,211,655	A	5/1993	Hasson
5,217,457	A	6/1993	Delahuerga et al.
5,217,478	A	6/1993	Rexroth
5,219,111	A	6/1993	Bilotti et al.
5,221,036	A	6/1993	Takase
5,221,281	A	6/1993	Klicek
5,222,963	A	6/1993	Brinkerhoff et al.
5,222,975	A	6/1993	Crainich
5,222,976	A	6/1993	Yoon
5,223,675	A	6/1993	Taft
5,234,447	A	8/1993	Kaster et al.
5,236,440	A	8/1993	Hlavacek
5,239,981	A	8/1993	Anapliotis
5,240,163	A	8/1993	Stein et al.
5,242,457	A	9/1993	Akopov et al.
5,244,462	A	9/1993	Delahuerga et al.
5,246,156	A	9/1993	Rothfuss et al.
5,246,443	A	9/1993	Mai
5,253,793	A	10/1993	Green et al.
5,258,009	A	11/1993	Conners
5,258,012	A	11/1993	Luscombe et al.
5,259,366	A	11/1993	Reydel et al.
5,259,835	A	11/1993	Clark et al.
5,260,637	A	11/1993	Pizzi
5,263,629	A	11/1993	Trumbull et al.
5,263,973	A	11/1993	Cook
5,264,218	A	11/1993	Rogozinski
5,268,622	A	12/1993	Philipp
5,271,543	A	12/1993	Grant et al.
5,271,544	A	12/1993	Fox et al.
RE34,519	E	1/1994	Fox et al.
5,275,323	A	1/1994	Schulze et al.
5,275,608	A	1/1994	Forman et al.
5,279,416	A	1/1994	Malec et al.
5,281,216	A	1/1994	Klicek
5,282,806	A	2/1994	Haber et al.
5,282,829	A	2/1994	Hermes
5,284,128	A	2/1994	Hart
5,285,381	A	2/1994	Iskarous et al.
5,285,945	A	2/1994	Brinkerhoff et al.
5,289,963	A	3/1994	McGarry et al.
5,290,271	A	3/1994	Jernberg
5,292,053	A	3/1994	Bilotti et al.
5,297,714	A	3/1994	Kramer
5,304,204	A	4/1994	Bregen
5,307,976	A	5/1994	Olson et al.
5,309,387	A	5/1994	Mori et al.
5,309,927	A	5/1994	Welch
5,312,023	A	5/1994	Green et al.
5,312,024	A	5/1994	Grant et al.
5,312,329	A	5/1994	Beaty et al.
5,314,424	A	5/1994	Nicholas
5,314,445	A	5/1994	Heidmueller née Degwitz et al.
5,314,466	A	5/1994	Stern et al.
5,318,221	A	6/1994	Green et al.
5,330,487	A	7/1994	Thornton et al.
5,330,502	A	7/1994	Hassler et al.
5,332,142	A	7/1994	Robinson et al.
5,333,422	A	8/1994	Warren et al.
5,333,772	A	8/1994	Rothfuss et al.
5,333,773	A	8/1994	Main et al.
5,334,183	A	8/1994	Wuchinich
5,336,232	A	8/1994	Green et al.
5,339,799	A	8/1994	Kami et al.
5,341,724	A	8/1994	Vatel
5,341,810	A	8/1994	Dardel
5,342,381	A	8/1994	Tidemand
5,342,395	A	8/1994	Jarrett et al.
5,342,396	A	8/1994	Cook
5,343,391	A	8/1994	Mushabac
5,344,060	A	9/1994	Gravener et al.
5,344,454	A	9/1994	Clarke et al.
5,346,504	A	9/1994	Ortiz et al.
5,348,259	A	9/1994	Blanco et al.
5,350,388	A	9/1994	Epstein
5,350,391	A	9/1994	Iacovelli
5,350,400	A	9/1994	Esposito et al.
5,352,229	A	10/1994	Goble et al.
5,352,235	A	10/1994	Koros et al.
5,352,238	A	10/1994	Green et al.
5,354,303	A	10/1994	Spaeth et al.
5,356,006	A	10/1994	Alpern et al.
5,358,506	A	10/1994	Green et al.
5,358,510	A	10/1994	Luscombe et al.
5,359,231	A	10/1994	Flowers et al.
D352,780	S	11/1994	Glaeser et al.
5,360,305	A	11/1994	Kerrigan
5,360,428	A	11/1994	Hutchinson, Jr.
5,364,001	A	11/1994	Bryan
5,364,003	A	11/1994	Williamson, IV
5,366,133	A	11/1994	Geiste
5,366,134	A	11/1994	Green et al.
5,366,479	A	11/1994	McGarry et al.
5,368,015	A	11/1994	Wilk
5,368,592	A	11/1994	Stern et al.
5,370,645	A	12/1994	Klicek et al.
5,372,124	A	12/1994	Takayama et al.
5,372,596	A	12/1994	Klicek et al.
5,372,602	A	12/1994	Burke
5,374,277	A	12/1994	Hassler
5,376,095	A	12/1994	Ortiz
5,379,933	A	1/1995	Green et al.
5,381,649	A	1/1995	Webb
5,381,782	A	1/1995	DeLaRama et al.
5,382,247	A	1/1995	Cimino et al.
5,383,880	A	1/1995	Hooven
5,383,881	A	1/1995	Green et al.
5,383,888	A	1/1995	Zvenyatsky et al.
5,383,895	A	1/1995	Holmes et al.
5,389,098	A	2/1995	Tsuruta et al.
5,389,104	A	2/1995	Hahnen et al.
5,391,180	A	2/1995	Tovey et al.
5,392,979	A	2/1995	Green et al.
5,395,030	A	3/1995	Kuramoto et al.
5,395,033	A	3/1995	Byrne et al.
5,395,034	A	3/1995	Allen et al.
5,395,312	A	3/1995	Desai
5,395,384	A	3/1995	Duthoit
5,397,046	A	3/1995	Savage et al.
5,397,324	A	3/1995	Carroll et al.
5,403,312	A	4/1995	Yates et al.
5,405,072	A	4/1995	Zlock et al.
5,405,073	A	4/1995	Porter
5,405,344	A	4/1995	Williamson et al.

(56) **References Cited**

U.S. PATENT DOCUMENTS

5,405,360	A	4/1995	Tovey
5,407,293	A	4/1995	Crainich
5,408,409	A	4/1995	Glassman et al.
5,409,498	A	4/1995	Braddock et al.
5,411,481	A	5/1995	Allen et al.
5,411,508	A	5/1995	Bessler et al.
5,413,107	A	5/1995	Oakley et al.
5,413,267	A	5/1995	Solyntjes et al.
5,413,268	A	5/1995	Green et al.
5,413,272	A	5/1995	Green et al.
5,413,573	A	5/1995	Koivukangas
5,415,334	A	5/1995	Williamson, IV et al.
5,415,335	A	5/1995	Knodell, Jr.
5,417,203	A	5/1995	Tovey et al.
5,417,361	A	5/1995	Williamson, IV
5,421,829	A	6/1995	Olichney et al.
5,422,567	A	6/1995	Matsunaga
5,423,471	A	6/1995	Mastri et al.
5,423,809	A	6/1995	Klicek
5,425,745	A	6/1995	Green et al.
5,431,322	A	7/1995	Green et al.
5,431,654	A	7/1995	Nic
5,431,668	A	7/1995	Burbank, III et al.
5,433,721	A	7/1995	Hooven et al.
5,437,681	A	8/1995	Meade et al.
5,438,302	A	8/1995	Goble
5,439,155	A	8/1995	Viola
5,439,156	A	8/1995	Grant et al.
5,439,479	A	8/1995	Shichman et al.
5,441,191	A	8/1995	Linden
5,441,193	A	8/1995	Gravener
5,441,483	A	8/1995	Avitall
5,441,494	A	8/1995	Ortiz
5,444,113	A	8/1995	Sinclair et al.
5,445,155	A	8/1995	Sieben
5,445,304	A	8/1995	Plyley et al.
5,445,644	A	8/1995	Pietrafitta et al.
5,447,265	A	9/1995	Vidal et al.
5,447,417	A	9/1995	Kuhl et al.
5,447,513	A	9/1995	Davison et al.
5,449,355	A	9/1995	Rhum et al.
5,449,365	A	9/1995	Green et al.
5,449,370	A	9/1995	Vaitekunas
5,452,836	A	9/1995	Huitema et al.
5,452,837	A	9/1995	Williamson, IV et al.
5,454,378	A	10/1995	Palmer et al.
5,454,827	A	10/1995	Aust et al.
5,456,401	A	10/1995	Green et al.
5,458,579	A	10/1995	Chodorow et al.
5,462,215	A	10/1995	Viola et al.
5,464,013	A	11/1995	Lemelson
5,464,144	A	11/1995	Guy et al.
5,464,300	A	11/1995	Crainich
5,465,894	A	11/1995	Clark et al.
5,465,895	A	11/1995	Knodel et al.
5,465,896	A	11/1995	Allen et al.
5,466,020	A	11/1995	Page et al.
5,467,911	A	11/1995	Tsuruta et al.
5,468,253	A	11/1995	Bezwada et al.
5,470,006	A	11/1995	Rodak
5,470,007	A	11/1995	Plyley et al.
5,470,009	A	11/1995	Rodak
5,470,010	A	11/1995	Rothfuss et al.
5,472,132	A	12/1995	Savage et al.
5,472,442	A	12/1995	Klicek
5,473,204	A	12/1995	Temple
5,474,057	A	12/1995	Makower et al.
5,474,223	A	12/1995	Viola et al.
5,474,566	A	12/1995	Alesi et al.
5,476,206	A	12/1995	Green et al.
5,476,479	A	12/1995	Green et al.
5,478,003	A	12/1995	Green et al.
5,478,354	A	12/1995	Tovey et al.
5,480,089	A	1/1996	Blewett
5,480,409	A	1/1996	Riza
5,482,197	A	1/1996	Green et al.
5,484,095	A	1/1996	Green et al.
5,484,398	A	1/1996	Stoddard
5,484,451	A	1/1996	Akopov et al.
5,485,947	A	1/1996	Olson et al.
5,485,952	A	1/1996	Fontayne
5,487,499	A	1/1996	Sorrentino et al.
5,487,500	A	1/1996	Knodel et al.
5,489,058	A	2/1996	Plyley et al.
5,489,256	A	2/1996	Adair
5,496,312	A	3/1996	Klicek
5,496,317	A	3/1996	Goble et al.
5,497,933	A	3/1996	DeFonzo et al.
5,501,654	A	3/1996	Failla et al.
5,503,320	A	4/1996	Webster et al.
5,503,635	A	4/1996	Sauer et al.
5,503,638	A	4/1996	Cooper et al.
5,505,363	A	4/1996	Green et al.
5,507,426	A	4/1996	Young et al.
5,509,596	A	4/1996	Green et al.
5,509,916	A	4/1996	Taylor
5,511,564	A	4/1996	Wilk
5,514,129	A	5/1996	Smith
5,514,157	A	5/1996	Nicholas et al.
5,518,163	A	5/1996	Hooven
5,518,164	A	5/1996	Hooven
5,520,678	A	5/1996	Heckele et al.
5,520,700	A	5/1996	Beyar et al.
5,522,817	A	6/1996	Sander et al.
5,522,831	A	6/1996	Sleister et al.
5,527,320	A	6/1996	Carruthers et al.
5,529,235	A	6/1996	Boiarski et al.
D372,086	S	7/1996	Grasso et al.
5,531,305	A	7/1996	Roberts et al.
5,531,744	A	7/1996	Nardella et al.
5,533,521	A	7/1996	Granger
5,533,581	A	7/1996	Barth et al.
5,533,661	A	7/1996	Main et al.
5,535,934	A	7/1996	Boiarski et al.
5,535,935	A	7/1996	Vidal et al.
5,535,937	A	7/1996	Boiarski et al.
5,540,375	A	7/1996	Bolanos et al.
5,541,376	A	7/1996	Ladtkow et al.
5,542,594	A	8/1996	McKean et al.
5,542,949	A	8/1996	Yoon
5,543,119	A	8/1996	Sutter et al.
5,547,117	A	8/1996	Hamblin et al.
5,549,583	A	8/1996	Sanford et al.
5,549,621	A	8/1996	Bessler et al.
5,549,627	A	8/1996	Kieturakis
5,549,628	A	8/1996	Cooper et al.
5,549,637	A	8/1996	Crainich
5,551,622	A	9/1996	Yoon
5,553,675	A	9/1996	Pitzen et al.
5,553,765	A	9/1996	Knodel et al.
5,554,148	A	9/1996	Aebischer et al.
5,554,169	A	9/1996	Green et al.
5,556,416	A	9/1996	Clark et al.
5,558,665	A	9/1996	Kieturakis
5,558,671	A	9/1996	Yates
5,560,530	A	10/1996	Bolanos et al.
5,560,532	A	10/1996	DeFonzo et al.
5,562,239	A	10/1996	Boiarski et al.
5,562,241	A	10/1996	Knodel et al.
5,562,682	A	10/1996	Oberlin et al.
5,562,690	A	10/1996	Green et al.
5,562,701	A	10/1996	Huitema et al.
5,562,702	A	10/1996	Huitema et al.
5,563,481	A	10/1996	Krause
5,564,615	A	10/1996	Bishop et al.
5,569,161	A	10/1996	Ebling et al.
5,569,270	A	10/1996	Weng
5,569,284	A	10/1996	Young et al.
5,571,090	A	11/1996	Sherts
5,571,100	A	11/1996	Goble et al.
5,571,116	A	11/1996	Bolanos et al.
5,571,285	A	11/1996	Chow et al.
5,573,543	A	11/1996	Akopov et al.
5,574,431	A	11/1996	McKeown et al.

(56) **References Cited**

U.S. PATENT DOCUMENTS

5,575,054 A 11/1996 Klinzing et al.
5,575,789 A 11/1996 Bell et al.
5,575,799 A 11/1996 Bolanos et al.
5,575,803 A 11/1996 Cooper et al.
5,575,805 A 11/1996 Li
5,577,654 A 11/1996 Bishop
5,579,978 A 12/1996 Green et al.
5,580,067 A 12/1996 Hamblin et al.
5,582,611 A 12/1996 Tsuruta et al.
5,582,617 A 12/1996 Klieman et al.
5,584,425 A 12/1996 Savage et al.
5,586,711 A 12/1996 Plyley et al.
5,588,579 A 12/1996 Schnut et al.
5,588,580 A 12/1996 Paul et al.
5,588,581 A 12/1996 Conlon et al.
5,591,170 A 1/1997 Spievack et al.
5,591,187 A 1/1997 Dekel
5,597,107 A 1/1997 Knodel et al.
5,599,151 A 2/1997 Daum et al.
5,599,279 A 2/1997 Slotman et al.
5,599,344 A 2/1997 Paterson
5,599,350 A 2/1997 Schulze et al.
5,599,852 A 2/1997 Scopelianos et al.
5,601,224 A 2/1997 Bishop et al.
5,601,573 A 2/1997 Fogelberg et al.
5,603,443 A 2/1997 Clark et al.
5,605,272 A 2/1997 Witt et al.
5,605,273 A 2/1997 Hamblin et al.
5,607,094 A 3/1997 Clark et al.
5,607,095 A 3/1997 Smith et al.
5,607,433 A 3/1997 Polla et al.
5,607,450 A 3/1997 Zvenyatsky et al.
5,609,285 A 3/1997 Grant et al.
5,609,601 A 3/1997 Kolesa et al.
5,611,709 A 3/1997 McAnulty
5,613,966 A 3/1997 Makower et al.
5,615,820 A 4/1997 Viola
5,618,294 A 4/1997 Aust et al.
5,618,303 A 4/1997 Marlow et al.
5,618,307 A 4/1997 Donlon et al.
5,619,992 A 4/1997 Guthrie et al.
5,620,289 A 4/1997 Curry
5,620,452 A 4/1997 Yoon
5,624,398 A 4/1997 Smith et al.
5,624,452 A 4/1997 Yates
5,626,587 A 5/1997 Bishop et al.
5,626,595 A 5/1997 Sklar et al.
5,628,446 A 5/1997 Geiste et al.
5,628,743 A 5/1997 Cimino
5,628,745 A 5/1997 Bek
5,630,539 A 5/1997 Plyley et al.
5,630,540 A 5/1997 Blewett
5,630,541 A 5/1997 Williamson, IV et al.
5,630,782 A 5/1997 Adair
5,632,432 A 5/1997 Schulze et al.
5,632,433 A 5/1997 Grant et al.
5,634,584 A 6/1997 Okorocha et al.
5,636,779 A 6/1997 Palmer
5,636,780 A 6/1997 Green et al.
5,639,008 A 6/1997 Gallagher et al.
5,643,291 A 7/1997 Pier et al.
5,645,209 A 7/1997 Green et al.
5,647,526 A 7/1997 Green et al.
5,647,869 A 7/1997 Goble et al.
5,649,937 A * 7/1997 Bito A61B 17/1285
606/139
5,649,956 A 7/1997 Jensen et al.
5,651,491 A 7/1997 Heaton et al.
5,653,373 A 8/1997 Green et al.
5,653,374 A 8/1997 Young et al.
5,653,677 A 8/1997 Okada et al.
5,653,721 A 8/1997 Knodel et al.
5,655,698 A 8/1997 Yoon
5,657,429 A 8/1997 Wang et al.
5,657,921 A 8/1997 Young et al.
5,658,238 A 8/1997 Suzuki et al.
5,658,281 A 8/1997 Heard
5,658,300 A 8/1997 Bito et al.
5,658,307 A 8/1997 Exconde
5,662,258 A 9/1997 Knodel et al.
5,662,260 A 9/1997 Yoon
5,662,662 A 9/1997 Bishop et al.
5,665,085 A 9/1997 Nardella
5,667,517 A 9/1997 Hooven
5,667,526 A 9/1997 Levin
5,667,527 A 9/1997 Cook
5,669,544 A 9/1997 Schulze et al.
5,669,904 A 9/1997 Platt, Jr. et al.
5,669,907 A 9/1997 Platt, Jr. et al.
5,669,918 A 9/1997 Balazs et al.
5,673,840 A 10/1997 Schulze et al.
5,673,841 A 10/1997 Schulze et al.
5,673,842 A 10/1997 Bittner et al.
5,674,286 A 10/1997 D'Alessio et al.
5,678,748 A 10/1997 Plyley et al.
5,680,981 A 10/1997 Mililli et al.
5,680,982 A 10/1997 Schulze et al.
5,680,983 A 10/1997 Plyley et al.
5,683,349 A 11/1997 Makower et al.
5,685,474 A 11/1997 Seeber
5,686,090 A 11/1997 Schilder et al.
5,688,270 A 11/1997 Yates et al.
5,690,269 A 11/1997 Bolanos et al.
5,692,668 A 12/1997 Schulze et al.
5,693,020 A 12/1997 Rauh
5,693,042 A 12/1997 Boiarski et al.
5,693,051 A 12/1997 Schulze et al.
5,695,494 A 12/1997 Becker
5,695,502 A 12/1997 Pier et al.
5,695,504 A 12/1997 Gifford, III et al.
5,695,524 A 12/1997 Kelley et al.
5,697,542 A 12/1997 Knodel et al.
5,697,543 A 12/1997 Burdorff
5,697,909 A 12/1997 Eggers et al.
5,697,943 A 12/1997 Sauer et al.
5,700,270 A 12/1997 Peyser et al.
5,702,387 A 12/1997 Arts et al.
5,702,408 A 12/1997 Wales et al.
5,702,409 A 12/1997 Rayburn et al.
5,704,087 A 1/1998 Strub
5,704,534 A 1/1998 Huitema et al.
5,706,997 A 1/1998 Green et al.
5,706,998 A 1/1998 Plyley et al.
5,707,392 A 1/1998 Kortenbach
5,709,334 A 1/1998 Sorrentino et al.
5,709,680 A 1/1998 Yates et al.
5,709,706 A 1/1998 Kienzle et al.
5,711,472 A 1/1998 Bryan
5,712,460 A 1/1998 Carr et al.
5,713,128 A 2/1998 Schrenk et al.
5,713,505 A 2/1998 Huitema
5,713,895 A 2/1998 Lontine et al.
5,713,896 A 2/1998 Nardella
5,713,920 A 2/1998 Bezwada et al.
5,715,987 A 2/1998 Kelley et al.
5,715,988 A 2/1998 Palmer
5,716,366 A 2/1998 Yates
5,718,359 A 2/1998 Palmer et al.
5,718,360 A 2/1998 Green et al.
5,718,548 A 2/1998 Cotellessa
5,718,714 A 2/1998 Livneh
5,720,744 A 2/1998 Eggleston et al.
D393,067 S 3/1998 Geary et al.
5,725,536 A 3/1998 Oberlin et al.
5,725,554 A 3/1998 Simon et al.
5,728,110 A 3/1998 Vidal et al.
5,728,121 A 3/1998 Bimbo et al.
5,730,758 A 3/1998 Allgeyer
5,732,821 A 3/1998 Stone et al.
5,732,871 A 3/1998 Clark et al.
5,732,872 A 3/1998 Bolduc et al.
5,733,308 A 3/1998 Daugherty et al.
5,735,445 A 4/1998 Vidal et al.
5,735,848 A 4/1998 Yates et al.

(56) **References Cited**

U.S. PATENT DOCUMENTS

5,735,874	A	4/1998	Measamer et al.
5,738,474	A	4/1998	Blewett
5,738,648	A	4/1998	Lands et al.
5,743,456	A	4/1998	Jones et al.
5,747,953	A	5/1998	Philipp
5,749,889	A	5/1998	Bacich et al.
5,749,893	A	5/1998	Vidal et al.
5,752,644	A	5/1998	Bolanos et al.
5,752,965	A	5/1998	Francis et al.
5,755,717	A	5/1998	Yates et al.
5,758,814	A	6/1998	Gallagher et al.
5,762,255	A	6/1998	Chrisman et al.
5,762,256	A	6/1998	Mastri et al.
5,766,188	A	6/1998	Igaki
5,766,205	A	6/1998	Zvenyatsky et al.
5,769,748	A	6/1998	Eyerly et al.
5,769,892	A	6/1998	Kingwell
5,772,379	A	6/1998	Evensen
5,772,578	A	6/1998	Heimberger et al.
5,772,659	A	6/1998	Becker et al.
5,776,130	A	7/1998	Buysse et al.
5,778,939	A	7/1998	Hok-Yin
5,779,130	A	7/1998	Alesi et al.
5,779,131	A	7/1998	Knodel et al.
5,779,132	A	7/1998	Knodel et al.
5,782,396	A	7/1998	Mastri et al.
5,782,397	A	7/1998	Koukline
5,782,749	A	7/1998	Riza
5,782,859	A	7/1998	Nicholas et al.
5,784,934	A	7/1998	Izumisawa
5,785,232	A	7/1998	Vidal et al.
5,785,647	A	7/1998	Tompkins et al.
5,787,897	A	8/1998	Kieturakis
5,792,135	A	8/1998	Madhani et al.
5,792,165	A	8/1998	Klieman et al.
5,794,834	A	8/1998	Hamblin et al.
5,796,188	A	8/1998	Bays
5,797,536	A	8/1998	Smith et al.
5,797,537	A	8/1998	Oberlin et al.
5,797,538	A	8/1998	Heaton et al.
5,797,906	A	8/1998	Rhum et al.
5,797,959	A	8/1998	Castro et al.
5,799,857	A	9/1998	Robertson et al.
5,800,379	A	9/1998	Edwards
5,800,423	A	9/1998	Jensen
5,806,676	A	9/1998	Wasgien
5,807,376	A	9/1998	Viola et al.
5,807,378	A	9/1998	Jensen et al.
5,807,393	A	9/1998	Williamson, IV et al.
5,809,441	A	9/1998	McKee
5,810,721	A	9/1998	Mueller et al.
5,810,811	A	9/1998	Yates et al.
5,810,846	A	9/1998	Virnich et al.
5,810,855	A	9/1998	Rayburn et al.
5,813,813	A	9/1998	Daum et al.
5,814,055	A	9/1998	Knodel et al.
5,814,057	A	9/1998	Oi et al.
5,816,471	A	10/1998	Plyley et al.
5,817,084	A	10/1998	Jensen
5,817,091	A	10/1998	Nardella et al.
5,817,093	A	10/1998	Williamson, IV et al.
5,817,109	A	10/1998	McGarry et al.
5,817,119	A	10/1998	Klieman et al.
5,820,009	A	10/1998	Melling et al.
5,823,066	A	10/1998	Huitema et al.
5,824,333	A	10/1998	Scopelianos et al.
5,826,776	A	10/1998	Schulze et al.
5,827,271	A	10/1998	Buysse et al.
5,827,298	A	10/1998	Hart et al.
5,829,662	A	11/1998	Allen et al.
5,833,690	A	11/1998	Yates et al.
5,833,695	A	11/1998	Yoon
5,833,696	A	11/1998	Whitfield et al.
5,836,503	A	11/1998	Ehrenfels et al.
5,836,960	A	11/1998	Kolesa et al.
5,839,639	A	11/1998	Sauer et al.
5,843,021	A	12/1998	Edwards et al.
5,843,096	A	12/1998	Igaki et al.
5,843,097	A	12/1998	Mayenberger et al.
5,843,122	A	12/1998	Riza
5,843,132	A	12/1998	Ilvento
5,843,169	A	12/1998	Taheri
5,846,254	A	12/1998	Schulze et al.
5,849,011	A	12/1998	Jones et al.
5,849,023	A	12/1998	Mericle
5,855,311	A	1/1999	Hamblin et al.
5,855,583	A	1/1999	Wang et al.
5,860,581	A	1/1999	Robertson et al.
5,860,975	A	1/1999	Goble et al.
5,865,361	A	2/1999	Milliman et al.
5,868,760	A	2/1999	McGuckin, Jr.
5,871,135	A	2/1999	Williamson IV et al.
5,873,885	A	2/1999	Weidenbenner
5,876,401	A	3/1999	Schulze et al.
5,878,193	A	3/1999	Wang et al.
5,878,607	A	3/1999	Nunes et al.
5,878,937	A	3/1999	Green et al.
5,878,938	A	3/1999	Bittner et al.
5,891,160	A	4/1999	Williamson, IV et al.
5,893,506	A	4/1999	Powell
5,893,835	A	4/1999	Witt et al.
5,893,878	A	4/1999	Pierce
5,894,979	A	4/1999	Powell
5,897,552	A	4/1999	Edwards et al.
5,897,562	A	4/1999	Bolanos et al.
5,899,914	A	5/1999	Zirps et al.
5,901,895	A	5/1999	Heaton et al.
5,902,312	A	5/1999	Frater et al.
5,903,117	A	5/1999	Gregory
5,904,647	A	5/1999	Ouchi
5,904,693	A	5/1999	Dicesare et al.
5,904,702	A	5/1999	Ek et al.
5,906,625	A	5/1999	Bito et al.
5,908,402	A	6/1999	Blythe
5,908,427	A	6/1999	McKean et al.
5,911,353	A	6/1999	Bolanos et al.
5,915,616	A	6/1999	Viola et al.
5,916,225	A	6/1999	Kugel
5,918,791	A	7/1999	Sorrentino et al.
5,919,198	A	7/1999	Graves, Jr. et al.
5,921,956	A	7/1999	Grinberg et al.
5,928,256	A	7/1999	Riza
5,931,847	A	8/1999	Bittner et al.
5,931,853	A	8/1999	McEwen et al.
5,937,951	A	8/1999	Izuchukwu et al.
5,938,667	A	8/1999	Peyser et al.
5,941,442	A	8/1999	Geiste et al.
5,941,890	A	8/1999	Voegele et al.
5,944,172	A	8/1999	Hannula
5,944,715	A	8/1999	Goble et al.
5,947,984	A	9/1999	Whipple
5,948,030	A	9/1999	Miller et al.
5,951,516	A	9/1999	Bunyan
5,951,552	A	9/1999	Long et al.
5,951,574	A	9/1999	Stefanchik et al.
5,951,581	A	9/1999	Saadat et al.
5,954,259	A	9/1999	Viola et al.
5,964,394	A	10/1999	Robertson
5,964,774	A	10/1999	McKean et al.
5,971,916	A	10/1999	Koren
5,973,221	A	10/1999	Collyer et al.
5,977,746	A	11/1999	Hershberger et al.
5,984,949	A	11/1999	Levin
5,988,479	A	11/1999	Palmer
5,997,528	A	12/1999	Bisch et al.
5,997,552	A	12/1999	Person et al.
6,001,108	A	12/1999	Wang et al.
6,003,517	A	12/1999	Sheffield et al.
6,004,319	A	12/1999	Goble et al.
6,004,335	A	12/1999	Vaitekunas et al.
6,010,054	A	1/2000	Johnson et al.
6,010,513	A	1/2000	Törmälä et al.
6,012,494	A	1/2000	Balazs
6,013,076	A	1/2000	Goble et al.

(56) **References Cited**

U.S. PATENT DOCUMENTS

6,015,406	A		1/2000	Goble et al.
6,015,417	A		1/2000	Reynolds, Jr.
6,017,322	A		1/2000	Snoke et al.
6,017,354	A		1/2000	Culp et al.
6,017,356	A		1/2000	Frederick et al.
6,018,227	A		1/2000	Kumar et al.
6,022,352	A		2/2000	Vandewalle
6,024,741	A		2/2000	Williamson, IV et al.
6,024,748	A		2/2000	Manzo et al.
6,024,764	A	*	2/2000	Schroeppel A61F 2/04 264/296
6,027,501	A		2/2000	Goble et al.
6,032,849	A		3/2000	Mastri et al.
6,033,378	A		3/2000	Lundquist et al.
6,033,399	A		3/2000	Gines
6,033,427	A		3/2000	Lee
6,037,724	A		3/2000	Buss et al.
6,037,927	A		3/2000	Rosenberg
6,039,733	A		3/2000	Buysse et al.
6,039,734	A		3/2000	Goble
6,042,601	A		3/2000	Smith
6,045,560	A		4/2000	McKean et al.
6,047,861	A		4/2000	Vidal et al.
6,049,145	A		4/2000	Austin et al.
6,050,472	A		4/2000	Shibata
6,050,990	A		4/2000	Tankovich et al.
6,050,996	A		4/2000	Schmaltz et al.
6,053,390	A		4/2000	Green et al.
6,053,922	A		4/2000	Krause et al.
RE36,720	E		5/2000	Green et al.
6,056,735	A		5/2000	Okada et al.
6,056,746	A		5/2000	Goble et al.
6,062,360	A		5/2000	Shields
6,063,095	A		5/2000	Wang et al.
6,063,097	A		5/2000	Oi et al.
6,063,098	A		5/2000	Houser et al.
6,065,679	A		5/2000	Levie et al.
6,065,919	A		5/2000	Peck
6,066,132	A		5/2000	Chen et al.
6,068,627	A		5/2000	Orszulak et al.
6,071,233	A		6/2000	Ishikawa et al.
6,074,386	A		6/2000	Goble et al.
6,074,401	A		6/2000	Gardiner et al.
6,077,286	A		6/2000	Cuschieri et al.
6,079,606	A		6/2000	Milliman et al.
6,080,181	A		6/2000	Jensen et al.
6,082,577	A		7/2000	Coates et al.
6,083,191	A		7/2000	Rose
6,083,234	A		7/2000	Nicholas et al.
6,083,242	A		7/2000	Cook
6,086,544	A		7/2000	Hibner et al.
6,086,600	A		7/2000	Kortenbach
6,090,106	A		7/2000	Goble et al.
6,093,186	A		7/2000	Goble
6,099,537	A		8/2000	Sugai et al.
6,099,551	A		8/2000	Gabbay
6,102,271	A		8/2000	Longo et al.
6,104,304	A		8/2000	Clark et al.
6,106,511	A		8/2000	Jensen
6,109,500	A		8/2000	Alli et al.
6,117,148	A		9/2000	Ravo et al.
6,117,158	A		9/2000	Measamer et al.
6,119,913	A		9/2000	Adams et al.
6,120,433	A		9/2000	Mizuno et al.
6,120,462	A		9/2000	Hibner et al.
6,123,241	A		9/2000	Walter et al.
H1904	H		10/2000	Yates et al.
6,126,058	A		10/2000	Adams et al.
6,126,670	A		10/2000	Walker et al.
6,131,789	A		10/2000	Schulze et al.
6,131,790	A		10/2000	Piraka
6,132,368	A		10/2000	Cooper
6,139,546	A		10/2000	Koenig et al.
6,149,660	A		11/2000	Laufer et al.
6,152,935	A		11/2000	Kammerer et al.
6,155,473	A		12/2000	Tompkins et al.
6,156,056	A		12/2000	Kearns et al.
6,159,146	A		12/2000	El Gazayerli
6,159,200	A		12/2000	Verdura et al.
6,159,224	A		12/2000	Yoon
6,162,208	A		12/2000	Hipps
6,162,537	A		12/2000	Martin et al.
6,165,175	A		12/2000	Wampler et al.
6,165,184	A		12/2000	Verdura et al.
6,165,188	A		12/2000	Saadat et al.
6,168,605	B1		1/2001	Measamer et al.
6,171,305	B1		1/2001	Sherman
6,171,316	B1		1/2001	Kovac et al.
6,171,330	B1		1/2001	Benchetrit
6,174,308	B1		1/2001	Goble et al.
6,174,309	B1		1/2001	Wrublewski et al.
6,175,290	B1		1/2001	Forsythe et al.
6,179,195	B1		1/2001	Adams et al.
6,179,776	B1		1/2001	Adams et al.
6,181,105	B1		1/2001	Cutolo et al.
6,182,673	B1		2/2001	Kindermann et al.
6,187,003	B1		2/2001	Buysse et al.
6,190,386	B1		2/2001	Rydell
6,193,129	B1		2/2001	Bittner et al.
6,197,042	B1		3/2001	Ginn et al.
6,200,330	B1		3/2001	Benderev et al.
6,202,914	B1		3/2001	Geiste et al.
6,206,897	B1		3/2001	Jamiolkowski et al.
6,206,904	B1		3/2001	Ouchi
6,210,403	B1		4/2001	Klicek
6,213,999	B1		4/2001	Platt, Jr. et al.
6,214,028	B1		4/2001	Yoon et al.
6,220,368	B1		4/2001	Ark et al.
6,223,100	B1		4/2001	Green
6,223,835	B1		5/2001	Habedank et al.
6,224,617	B1		5/2001	Saadat et al.
6,228,081	B1		5/2001	Goble
6,228,083	B1		5/2001	Lands et al.
6,228,084	B1		5/2001	Kirwan, Jr.
6,231,565	B1		5/2001	Tovey et al.
6,234,178	B1		5/2001	Goble et al.
6,241,139	B1		6/2001	Milliman et al.
6,241,140	B1		6/2001	Adams et al.
6,241,723	B1		6/2001	Heim et al.
6,245,084	B1		6/2001	Mark et al.
6,248,116	B1		6/2001	Chevillon et al.
6,248,117	B1		6/2001	Blatter
6,249,076	B1		6/2001	Madden et al.
6,249,105	B1		6/2001	Andrews et al.
6,250,532	B1		6/2001	Green et al.
6,258,107	B1		7/2001	Balázs et al.
6,261,286	B1		7/2001	Goble et al.
6,264,086	B1		7/2001	McGuckin, Jr.
6,264,087	B1		7/2001	Whitman
6,270,508	B1		8/2001	Klieman et al.
6,273,876	B1		8/2001	Klima et al.
6,273,897	B1		8/2001	Dalessandro et al.
6,277,114	B1		8/2001	Bullivant et al.
6,293,942	B1		9/2001	Goble et al.
6,296,640	B1		10/2001	Wampler et al.
6,302,311	B1		10/2001	Adams et al.
6,305,891	B1		10/2001	Burlingame
6,306,134	B1		10/2001	Goble et al.
6,306,149	B1		10/2001	Meade
6,309,403	B1		10/2001	Minor et al.
6,315,184	B1		11/2001	Whitman
6,320,123	B1		11/2001	Reimers
6,322,494	B1		11/2001	Bullivant et al.
6,324,339	B1		11/2001	Hudson et al.
6,325,799	B1		12/2001	Goble
6,325,810	B1		12/2001	Hamilton et al.
6,330,965	B1		12/2001	Milliman et al.
6,331,181	B1		12/2001	Tierney et al.
6,331,761	B1		12/2001	Kumar et al.
6,333,029	B1		12/2001	Vyakarnam et al.
6,334,860	B1		1/2002	Dorn
6,334,861	B1		1/2002	Chandler et al.
6,336,926	B1		1/2002	Goble
6,338,737	B1		1/2002	Toledano

(56) **References Cited**

U.S. PATENT DOCUMENTS

6,343,731	B1	2/2002	Adams et al.
6,346,077	B1	2/2002	Taylor et al.
6,352,503	B1	3/2002	Matsui et al.
6,352,532	B1	3/2002	Kramer et al.
6,355,699	B1	3/2002	Vyakarnam et al.
6,356,072	B1	3/2002	Chass
6,358,224	B1	3/2002	Tims et al.
6,364,877	B1	4/2002	Goble et al.
6,364,888	B1	4/2002	Niemeyer et al.
6,370,981	B2	4/2002	Watarai
6,373,152	B1	4/2002	Wang et al.
6,383,201	B1	5/2002	Dong
6,387,113	B1	5/2002	Hawkins et al.
6,387,114	B2	5/2002	Adams
6,391,038	B2	5/2002	Vargas et al.
6,392,854	B1	5/2002	O'Gorman
6,398,781	B1	6/2002	Goble et al.
6,398,797	B2	6/2002	Bombard et al.
6,402,766	B2	6/2002	Bowman et al.
6,406,440	B1	6/2002	Stefanchik
6,406,472	B1	6/2002	Jensen
6,409,724	B1	6/2002	Penny et al.
H2037	H	7/2002	Yates et al.
6,413,274	B1	7/2002	Pedros
6,416,486	B1	7/2002	Wampler
6,416,509	B1	7/2002	Goble et al.
6,419,695	B1	7/2002	Gabbay
6,423,079	B1	7/2002	Blake, III
RE37,814	E	8/2002	Allgeyer
6,428,070	B1	8/2002	Takanashi et al.
6,429,611	B1	8/2002	Li
6,430,298	B1	8/2002	Kettl et al.
6,432,065	B1	8/2002	Burdorff et al.
6,436,097	B1	8/2002	Nardella
6,436,107	B1	8/2002	Wang et al.
6,436,110	B2	8/2002	Bowman et al.
6,436,122	B1	8/2002	Frank et al.
6,439,439	B1	8/2002	Rickard et al.
6,439,446	B1	8/2002	Perry et al.
6,440,146	B2	8/2002	Nicholas et al.
6,441,577	B2	8/2002	Blumenkranz et al.
6,443,973	B1	9/2002	Whitman
6,447,518	B1	9/2002	Krause et al.
6,447,864	B2	9/2002	Johnson et al.
6,450,391	B1	9/2002	Kayan et al.
6,450,989	B2	9/2002	Dubrul et al.
6,454,781	B1	9/2002	Witt et al.
6,468,275	B1	10/2002	Wampler et al.
6,471,106	B1	10/2002	Reining
6,471,659	B2	10/2002	Eggers et al.
6,478,210	B2	11/2002	Adams et al.
6,482,200	B2	11/2002	Shippert
6,485,490	B2	11/2002	Wampler et al.
6,485,667	B1	11/2002	Tan
6,488,196	B1	12/2002	Fenton, Jr.
6,488,197	B1	12/2002	Whitman
6,491,201	B1	12/2002	Whitman
6,491,690	B1	12/2002	Goble et al.
6,491,701	B2	12/2002	Tierney et al.
6,492,785	B1	12/2002	Kasten et al.
6,494,896	B1	12/2002	D'Alessio et al.
6,498,480	B1	12/2002	Manara
6,500,176	B1	12/2002	Truckai et al.
6,500,194	B2	12/2002	Benderev et al.
6,503,257	B2	1/2003	Grant et al.
6,503,259	B2	1/2003	Huxel et al.
6,505,768	B2	1/2003	Whitman
6,510,854	B2	1/2003	Goble
6,511,468	B1	1/2003	Cragg et al.
6,512,360	B1	1/2003	Goto et al.
6,517,528	B1	2/2003	Pantages et al.
6,517,535	B2	2/2003	Edwards
6,517,565	B1	2/2003	Whitman et al.
6,517,566	B1	2/2003	Hovland et al.
6,522,101	B2	2/2003	Malackowski
6,527,782	B2	3/2003	Hogg et al.
6,527,785	B2	3/2003	Sancoff et al.
6,533,157	B1	3/2003	Whitman
6,533,784	B2	3/2003	Truckai et al.
6,535,764	B2	3/2003	Imran et al.
6,543,456	B1	4/2003	Freeman
6,545,384	B1	4/2003	Pelrine et al.
6,547,786	B1	4/2003	Goble
6,550,546	B2	4/2003	Thurler et al.
6,551,333	B2	4/2003	Kuhns et al.
6,554,861	B2	4/2003	Knox et al.
6,555,770	B2	4/2003	Kawase
6,558,378	B2	5/2003	Sherman et al.
6,558,379	B1	5/2003	Batchelor et al.
6,565,560	B1	5/2003	Goble et al.
6,566,619	B2	5/2003	Gillman et al.
6,569,085	B2	5/2003	Kortenbach et al.
6,569,171	B2	5/2003	DeGuillebon et al.
6,578,751	B2	6/2003	Hartwick
6,582,427	B1	6/2003	Goble et al.
6,582,441	B1	6/2003	He et al.
6,583,533	B2	6/2003	Pelrine et al.
6,585,144	B2	7/2003	Adams et al.
6,587,750	B2	7/2003	Gerbi et al.
6,588,643	B2	7/2003	Bolduc et al.
6,588,931	B2	7/2003	Betzner et al.
6,589,164	B1	7/2003	Flaherty
6,592,538	B1	7/2003	Hotchkiss et al.
6,592,597	B2	7/2003	Grant et al.
6,596,296	B1	7/2003	Nelson et al.
6,596,304	B1	7/2003	Bayon et al.
6,596,432	B2	7/2003	Kawakami et al.
D478,665	S	8/2003	Isaacs et al.
D478,986	S	8/2003	Johnston et al.
6,601,749	B2	8/2003	Sullivan et al.
6,602,252	B2	8/2003	Mollenauer
6,602,262	B2	8/2003	Griego et al.
6,605,078	B2	8/2003	Adams
6,605,669	B2	8/2003	Awokola et al.
6,607,475	B2	8/2003	Doyle et al.
6,611,793	B1	8/2003	Burnside et al.
6,613,069	B2	9/2003	Boyd et al.
6,616,686	B2	9/2003	Coleman et al.
6,619,529	B2	9/2003	Green et al.
6,620,166	B1	9/2003	Wenstrom, Jr. et al.
6,626,834	B2	9/2003	Dunne et al.
6,629,630	B2	10/2003	Adams
6,629,974	B2	10/2003	Penny et al.
6,629,988	B2	10/2003	Weadock
6,635,838	B1	10/2003	Kornelson
6,636,412	B2	10/2003	Smith
6,638,108	B2	10/2003	Tachi
6,638,285	B2	10/2003	Gabbay
6,638,297	B1	10/2003	Huitema
RE38,335	E	11/2003	Aust et al.
6,641,528	B2	11/2003	Torii
6,644,532	B2	11/2003	Green et al.
6,645,201	B1	11/2003	Utley et al.
6,646,307	B1	11/2003	Yu et al.
6,648,816	B2	11/2003	Irion et al.
6,652,595	B1	11/2003	Nicolo
D484,243	S	12/2003	Ryan et al.
D484,595	S	12/2003	Ryan et al.
D484,596	S	12/2003	Ryan et al.
6,656,177	B2	12/2003	Truckai et al.
6,656,193	B2	12/2003	Grant et al.
6,663,623	B1	12/2003	Oyama et al.
6,663,641	B1	12/2003	Kovac et al.
6,666,854	B1	12/2003	Lange
6,666,875	B1	12/2003	Sakurai et al.
6,667,825	B2	12/2003	Lu et al.
6,669,073	B2	12/2003	Milliman et al.
6,671,185	B2	12/2003	Duval
D484,977	S	1/2004	Ryan et al.
6,676,660	B2	1/2004	Wampler et al.
6,679,269	B2	1/2004	Swanson
6,679,410	B2	1/2004	Würsch et al.
6,681,978	B2	1/2004	Geiste et al.
6,681,979	B2	1/2004	Whitman

(56) **References Cited**

U.S. PATENT DOCUMENTS

6,682,527	B2	1/2004	Strul
6,682,528	B2	1/2004	Frazier et al.
6,685,727	B2	2/2004	Fisher et al.
6,689,153	B1	2/2004	Skiba
6,692,507	B2	2/2004	Pugsley et al.
6,695,198	B2	2/2004	Adams et al.
6,695,199	B2	2/2004	Whitman
6,695,774	B2	2/2004	Hale et al.
6,697,048	B2	2/2004	Rosenberg et al.
6,698,643	B2	3/2004	Whitman
6,699,235	B2	3/2004	Wallace et al.
6,704,210	B1	3/2004	Myers
6,705,503	B1	3/2004	Pedicini et al.
6,709,445	B2	3/2004	Boebel et al.
6,712,773	B1	3/2004	Viola
6,716,223	B2	4/2004	Leopold et al.
6,716,232	B1	4/2004	Vidal et al.
6,716,233	B1	4/2004	Whitman
6,722,552	B2	4/2004	Fenton, Jr.
6,723,087	B2	4/2004	O'Neill et al.
6,723,091	B2	4/2004	Goble et al.
6,726,697	B2	4/2004	Nicholas et al.
6,726,706	B2	4/2004	Dominguez
6,729,119	B2	5/2004	Schnipke et al.
6,736,825	B2	5/2004	Blatter et al.
6,736,854	B2	5/2004	Vadurro et al.
6,740,030	B2	5/2004	Martone et al.
6,747,121	B2	6/2004	Gogolewski
6,749,560	B1	6/2004	Konstorum et al.
6,752,768	B2	6/2004	Burdorff et al.
6,752,816	B2	6/2004	Culp et al.
6,755,195	B1	6/2004	Lemke et al.
6,755,338	B2	6/2004	Hahnen et al.
6,758,846	B2	7/2004	Goble et al.
6,761,685	B2	7/2004	Adams et al.
6,762,339	B1	7/2004	Klun et al.
6,764,445	B2	7/2004	Ramans et al.
6,767,352	B2	7/2004	Field et al.
6,767,356	B2	7/2004	Kanner et al.
6,769,590	B2	8/2004	Vresh et al.
6,769,594	B2	8/2004	Orban, III
6,770,027	B2	8/2004	Banik et al.
6,770,070	B1	8/2004	Balbierz
6,770,072	B1	8/2004	Truckai et al.
6,773,409	B2	8/2004	Truckai et al.
6,773,438	B1	8/2004	Knodel et al.
6,775,575	B2	8/2004	Bommannan et al.
6,777,838	B2	8/2004	Miekka et al.
6,780,151	B2	8/2004	Grabover et al.
6,780,180	B1	8/2004	Goble et al.
6,783,524	B2	8/2004	Anderson et al.
6,786,382	B1	9/2004	Hoffman
6,786,864	B2	9/2004	Matsuura et al.
6,786,896	B1	9/2004	Madhani et al.
6,788,018	B1	9/2004	Blumenkranz
6,790,173	B2	9/2004	Saadat et al.
6,793,652	B1	9/2004	Whitman et al.
6,793,661	B2	9/2004	Hamilton et al.
6,793,663	B2	9/2004	Kneifel et al.
6,802,843	B2	10/2004	Truckai et al.
6,805,273	B2	10/2004	Bilotti et al.
6,806,808	B1	10/2004	Watters et al.
6,808,525	B2	10/2004	Latterell et al.
6,814,741	B2	11/2004	Bowman et al.
6,817,508	B1	11/2004	Racenet et al.
6,817,509	B2	11/2004	Geiste et al.
6,817,974	B2	11/2004	Cooper et al.
6,818,018	B1	11/2004	Sawhney
6,820,791	B2	11/2004	Adams
6,821,273	B2	11/2004	Mollenauer
6,821,282	B2	11/2004	Perry et al.
6,821,284	B2	11/2004	Sturtz et al.
6,827,246	B2	12/2004	Sullivan et al.
6,827,712	B2	12/2004	Tovey et al.
6,827,725	B2	12/2004	Batchelor et al.
6,828,902	B2	12/2004	Casden
6,830,174	B2	12/2004	Hillstead et al.
6,831,629	B2	12/2004	Nakamura et al.
6,832,998	B2	12/2004	Goble
6,834,001	B2	12/2004	Myono
6,835,173	B2	12/2004	Couvillon, Jr.
6,835,199	B2	12/2004	McGuckin, Jr. et al.
6,835,336	B2	12/2004	Watt
6,837,846	B2	1/2005	Jaffe et al.
6,837,883	B2	1/2005	Moll et al.
6,838,493	B2	1/2005	Williams et al.
6,840,423	B2	1/2005	Adams et al.
6,843,403	B2	1/2005	Whitman
6,843,789	B2	1/2005	Goble
6,843,793	B2	1/2005	Brock et al.
6,846,307	B2	1/2005	Whitman et al.
6,846,308	B2	1/2005	Whitman et al.
6,846,309	B2	1/2005	Whitman et al.
6,849,071	B2	2/2005	Whitman et al.
6,850,817	B1	2/2005	Green
6,853,879	B2	2/2005	Sunaoshi
6,858,005	B2	2/2005	Ohline et al.
RE38,708	E	3/2005	Bolanos et al.
6,861,142	B1	3/2005	Wilkie et al.
6,863,694	B1	3/2005	Boyce et al.
6,866,178	B2	3/2005	Adams et al.
6,866,671	B2	3/2005	Tierney et al.
6,867,248	B1	3/2005	Martin et al.
6,869,430	B2	3/2005	Balbierz et al.
6,869,435	B2	3/2005	Blake, III
6,872,214	B2	3/2005	Sonnenschein et al.
6,874,669	B2	4/2005	Adams et al.
6,877,647	B2	4/2005	Green et al.
6,878,106	B1	4/2005	Herrmann
6,889,116	B2	5/2005	Jinno
6,893,435	B2	5/2005	Goble
6,899,538	B2	5/2005	Matoba
6,905,057	B2	6/2005	Swayze et al.
6,905,497	B2	6/2005	Truckai et al.
6,905,498	B2	6/2005	Hooven
6,908,472	B2	6/2005	Wiener et al.
6,911,033	B2	6/2005	de Guillebon et al.
6,911,916	B1	6/2005	Wang et al.
6,913,579	B2	7/2005	Truckai et al.
6,913,608	B2	7/2005	Liddicoat et al.
6,913,613	B2	7/2005	Schwarz et al.
6,921,397	B2	7/2005	Corcoran et al.
6,921,412	B1	7/2005	Black et al.
6,923,093	B2	8/2005	Ullah
6,923,803	B2	8/2005	Goble
6,926,716	B2	8/2005	Baker et al.
6,929,641	B2	8/2005	Goble et al.
6,929,644	B2	8/2005	Truckai et al.
6,931,830	B2	8/2005	Liao
6,932,218	B2	8/2005	Kosann et al.
6,932,810	B2	8/2005	Ryan
6,936,042	B2	8/2005	Wallace et al.
6,936,948	B2	8/2005	Bell et al.
6,939,358	B2	9/2005	Palacios et al.
6,942,662	B2	9/2005	Goble et al.
6,945,444	B2	9/2005	Gresham et al.
6,945,981	B2	9/2005	Donofrio et al.
6,953,138	B1	10/2005	Dworak et al.
6,953,139	B2	10/2005	Milliman et al.
6,958,035	B2	10/2005	Friedman et al.
6,959,851	B2	11/2005	Heinrich
6,959,852	B2	11/2005	Shelton, IV et al.
6,960,107	B1	11/2005	Schaub et al.
6,960,163	B2	11/2005	Ewers et al.
6,960,220	B2	11/2005	Marino et al.
6,962,587	B2	11/2005	Johnson et al.
6,963,792	B1	11/2005	Green
6,964,363	B2	11/2005	Wales et al.
6,966,907	B2	11/2005	Goble
6,966,909	B2	11/2005	Marshall et al.
6,971,988	B2	12/2005	Orban, III
6,972,199	B2	12/2005	Lebouitz et al.
6,974,462	B2	12/2005	Sater
6,978,921	B2	12/2005	Shelton, IV et al.

(56) **References Cited**

U.S. PATENT DOCUMENTS

6,978,922	B2	12/2005	Bilotti et al.
6,981,628	B2	1/2006	Wales
6,981,941	B2	1/2006	Whitman et al.
6,981,978	B2	1/2006	Gannoe
6,984,203	B2	1/2006	Tartaglia et al.
6,984,231	B2	1/2006	Goble et al.
6,986,451	B1	1/2006	Mastri et al.
6,988,649	B2	1/2006	Shelton, IV et al.
6,988,650	B2	1/2006	Schwemberger et al.
6,990,796	B2	1/2006	Schnipke et al.
6,993,413	B2	1/2006	Sunaoshi
6,994,708	B2	2/2006	Manzo
6,995,729	B2	2/2006	Govari et al.
6,997,931	B2	2/2006	Sauer et al.
6,998,816	B2	2/2006	Wieck et al.
7,000,818	B2	2/2006	Shelton, IV et al.
7,000,819	B2	2/2006	Swayze et al.
7,001,380	B2	2/2006	Goble
7,001,408	B2	2/2006	Knodel et al.
7,008,435	B2	3/2006	Cummins
7,009,039	B2	3/2006	Yayon et al.
7,011,657	B2	3/2006	Truckai et al.
7,018,357	B2	3/2006	Emmons
7,018,390	B2	3/2006	Turovskiy et al.
7,021,669	B1	4/2006	Lindermeir et al.
7,025,743	B2	4/2006	Mann et al.
7,029,435	B2	4/2006	Nakao
7,029,439	B2	4/2006	Roberts et al.
7,032,798	B2	4/2006	Whitman et al.
7,032,799	B2	4/2006	Viola et al.
7,033,356	B2	4/2006	Latterell et al.
7,036,680	B1	5/2006	Flannery
7,037,344	B2	5/2006	Kagan et al.
7,041,102	B2	5/2006	Truckai et al.
7,041,868	B2	5/2006	Greene et al.
7,043,852	B2	5/2006	Hayashida et al.
7,044,350	B2	5/2006	Kameyama et al.
7,044,352	B2	5/2006	Shelton, IV et al.
7,044,353	B2	5/2006	Mastri et al.
7,048,687	B1	5/2006	Reuss et al.
7,048,745	B2	5/2006	Tierney et al.
7,052,494	B2	5/2006	Goble et al.
7,052,499	B2	5/2006	Steger et al.
7,055,730	B2	6/2006	Ehrenfels et al.
7,055,731	B2	6/2006	Shelton, IV et al.
7,056,284	B2	6/2006	Martone et al.
7,056,330	B2	6/2006	Gayton
7,059,331	B2	6/2006	Adams et al.
7,059,508	B2	6/2006	Shelton, IV et al.
7,063,671	B2	6/2006	Couvillon, Jr.
7,063,712	B2	6/2006	Vargas et al.
7,066,879	B2	6/2006	Fowler et al.
7,066,944	B2	6/2006	Laufer et al.
7,067,038	B2	6/2006	Trokhan et al.
7,070,083	B2	7/2006	Jankowski
7,070,559	B2	7/2006	Adams et al.
7,070,597	B2	7/2006	Truckai et al.
7,071,287	B2	7/2006	Rhine et al.
7,075,770	B1	7/2006	Smith
7,077,856	B2	7/2006	Whitman
7,080,769	B2	7/2006	Vresh et al.
7,081,114	B2	7/2006	Rashidi
7,083,073	B2	8/2006	Yoshie et al.
7,083,075	B2	8/2006	Swayze et al.
7,083,571	B2	8/2006	Wang et al.
7,083,615	B2	8/2006	Peterson et al.
7,083,619	B2	8/2006	Truckai et al.
7,083,620	B2	8/2006	Jahns et al.
7,087,054	B2	8/2006	Truckai et al.
7,087,071	B2	8/2006	Nicholas et al.
7,090,637	B2	8/2006	Danitz et al.
7,090,673	B2	8/2006	Dycus et al.
7,090,683	B2	8/2006	Brock et al.
7,090,684	B2	8/2006	McGuckin, Jr. et al.
7,094,202	B2	8/2006	Nobis et al.
7,094,247	B2	8/2006	Monassevitch et al.
7,097,089	B2	8/2006	Marczyk
7,097,644	B2	8/2006	Long
7,097,650	B2	8/2006	Weller et al.
7,098,794	B2	8/2006	Lindsay et al.
7,100,949	B2	9/2006	Williams et al.
7,101,394	B2	9/2006	Hamm et al.
7,104,741	B2	9/2006	Krohn
7,108,695	B2	9/2006	Witt et al.
7,108,701	B2	9/2006	Evens et al.
7,108,709	B2	9/2006	Cummins
7,111,769	B2	9/2006	Wales et al.
7,112,214	B2	9/2006	Peterson et al.
RE39,358	E	10/2006	Goble
7,114,642	B2	10/2006	Whitman
7,118,582	B1	10/2006	Wang et al.
7,121,446	B2	10/2006	Arad et al.
7,122,028	B2	10/2006	Looper et al.
7,125,409	B2	10/2006	Truckai et al.
7,126,303	B2	10/2006	Farritor et al.
7,126,879	B2	10/2006	Snyder
7,128,253	B2	10/2006	Mastri et al.
7,128,254	B2	10/2006	Shelton, IV et al.
7,128,748	B2	10/2006	Mooradian et al.
7,131,445	B2	11/2006	Amoah
7,133,601	B2	11/2006	Phillips et al.
7,134,587	B2	11/2006	Schwemberger et al.
7,137,980	B2	11/2006	Buysse et al.
7,137,981	B2	11/2006	Long
7,139,016	B2	11/2006	Squilla et al.
7,140,527	B2	11/2006	Ehrenfels et al.
7,140,528	B2	11/2006	Shelton, IV
7,143,923	B2	12/2006	Shelton, IV et al.
7,143,924	B2	12/2006	Scirica et al.
7,143,925	B2	12/2006	Shelton, IV et al.
7,143,926	B2	12/2006	Shelton, IV et al.
7,147,138	B2	12/2006	Shelton, IV
7,147,139	B2	12/2006	Schwemberger et al.
7,147,140	B2	12/2006	Wukusick et al.
7,147,637	B2	12/2006	Goble
7,147,650	B2	12/2006	Lee
7,150,748	B2	12/2006	Ebbutt et al.
7,153,300	B2	12/2006	Goble
7,155,316	B2	12/2006	Sutherland et al.
7,156,863	B2	1/2007	Sonnenschein et al.
7,159,750	B2	1/2007	Racenet et al.
7,160,296	B2	1/2007	Pearson et al.
7,160,299	B2	1/2007	Baily
7,161,036	B2	1/2007	Oikawa et al.
7,166,133	B2	1/2007	Evans et al.
7,168,604	B2	1/2007	Milliman et al.
7,172,104	B2	2/2007	Scirica et al.
7,172,593	B2	2/2007	Trieu et al.
7,179,223	B2	2/2007	Motoki et al.
7,179,267	B2	2/2007	Nolan et al.
7,182,239	B1	2/2007	Myers
7,182,763	B2	2/2007	Nardella
7,183,737	B2	2/2007	Kitagawa
7,188,758	B2	3/2007	Viola et al.
7,189,207	B2	3/2007	Viola
7,195,627	B2	3/2007	Amoah et al.
7,199,537	B2	4/2007	Okamura et al.
7,202,653	B2	4/2007	Pai
7,204,835	B2	4/2007	Latterell et al.
7,207,233	B2	4/2007	Wadge
7,207,471	B2	4/2007	Heinrich et al.
7,207,472	B2	4/2007	Wukusick et al.
7,207,556	B2	4/2007	Saitoh et al.
7,208,005	B2	4/2007	Frecker et al.
7,210,609	B2	5/2007	Leiboff et al.
7,211,081	B2	5/2007	Goble
7,211,084	B2	5/2007	Goble et al.
7,211,092	B2	5/2007	Hughett
7,211,979	B2	5/2007	Khatib et al.
7,213,736	B2	5/2007	Wales et al.
7,214,224	B2	5/2007	Goble
7,215,517	B2	5/2007	Takamatsu
7,217,285	B2	5/2007	Vargas et al.
7,220,260	B2	5/2007	Fleming et al.

(56) **References Cited**

U.S. PATENT DOCUMENTS

7,220,272	B2	5/2007	Weadock
7,225,963	B2	6/2007	Scirica
7,225,964	B2	6/2007	Mastri et al.
7,234,624	B2	6/2007	Gresham et al.
7,235,089	B1	6/2007	McGuckin, Jr.
7,235,302	B2	6/2007	Jing et al.
7,237,708	B1	7/2007	Guy et al.
7,238,195	B2	7/2007	Viola
7,238,901	B2	7/2007	Kim et al.
7,241,288	B2	7/2007	Braun
7,246,734	B2	7/2007	Shelton, IV
7,247,161	B2	7/2007	Johnston et al.
7,249,267	B2	7/2007	Chapuis
7,252,660	B2	8/2007	Kunz
7,255,696	B2	8/2007	Goble et al.
7,256,695	B2	8/2007	Hamel et al.
7,258,262	B2	8/2007	Mastri et al.
7,258,546	B2	8/2007	Beier et al.
7,260,431	B2	8/2007	Libbus et al.
7,265,374	B2	9/2007	Lee et al.
7,267,679	B2	9/2007	McGuckin, Jr. et al.
7,273,483	B2	9/2007	Wiener et al.
7,278,562	B2	10/2007	Mastri et al.
7,278,563	B1	10/2007	Green
7,278,949	B2	10/2007	Bader
7,278,994	B2	10/2007	Goble
7,282,048	B2	10/2007	Goble et al.
7,286,850	B2	10/2007	Frielink et al.
7,287,682	B1	10/2007	Ezzat et al.
7,293,685	B2	11/2007	Ehrenfels et al.
7,295,893	B2	11/2007	Sunaoshi
7,295,907	B2	11/2007	Lu et al.
7,296,722	B2	11/2007	Ivanko
7,296,724	B2	11/2007	Green et al.
7,297,149	B2	11/2007	Vitali et al.
7,300,373	B2	11/2007	Jinno et al.
7,300,450	B2	11/2007	Vleugels et al.
7,303,106	B2	12/2007	Milliman et al.
7,303,107	B2	12/2007	Milliman et al.
7,303,108	B2	12/2007	Shelton, IV
7,303,502	B2	12/2007	Thompson
7,303,556	B2	12/2007	Metzger
7,306,597	B2	12/2007	Manzo
7,308,998	B2	12/2007	Mastri et al.
7,322,859	B2	1/2008	Evans
7,322,975	B2	1/2008	Goble et al.
7,322,994	B2	1/2008	Nicholas et al.
7,324,572	B2	1/2008	Chang
7,326,203	B2	2/2008	Papineau et al.
7,326,213	B2	2/2008	Benderev et al.
7,328,828	B2	2/2008	Ortiz et al.
7,328,829	B2	2/2008	Arad et al.
7,330,004	B2	2/2008	DeJonge et al.
7,331,340	B2	2/2008	Barney
7,334,717	B2	2/2008	Rethy et al.
7,334,718	B2	2/2008	McAlister et al.
7,335,199	B2	2/2008	Goble et al.
7,336,048	B2	2/2008	Lohr
7,336,184	B2	2/2008	Smith et al.
7,338,513	B2	3/2008	Lee et al.
7,341,591	B2	3/2008	Grinberg
7,343,920	B2	3/2008	Toby et al.
7,344,532	B2	3/2008	Goble et al.
7,344,533	B2	3/2008	Pearson et al.
7,346,344	B2	3/2008	Fontaine
7,348,763	B1	3/2008	Reinhart et al.
RE40,237	E	4/2008	Bilotti et al.
7,351,258	B2	4/2008	Ricotta et al.
7,354,447	B2	4/2008	Shelton, IV et al.
7,354,502	B2	4/2008	Polat et al.
7,357,287	B2	4/2008	Shelton, IV et al.
7,357,806	B2	4/2008	Rivera et al.
7,361,195	B2	4/2008	Schwartz et al.
7,364,060	B2	4/2008	Milliman
7,364,061	B2	4/2008	Swayze et al.
7,377,918	B2	5/2008	Amoah
7,377,928	B2	5/2008	Zubik et al.
7,380,695	B2	6/2008	Doll et al.
7,380,696	B2	6/2008	Shelton, IV et al.
7,384,417	B2	6/2008	Cucin
7,386,365	B2	6/2008	Nixon
7,386,730	B2	6/2008	Uchikubo
7,388,217	B2	6/2008	Buschbeck et al.
7,388,484	B2	6/2008	Hsu
7,391,173	B2	6/2008	Schena
7,396,356	B2	7/2008	Mollenauer
7,397,364	B2	7/2008	Govari
7,398,907	B2	7/2008	Racenet et al.
7,398,908	B2	7/2008	Holsten et al.
7,400,752	B2	7/2008	Zacharias
7,401,721	B2	7/2008	Holsten et al.
7,404,508	B2	7/2008	Smith et al.
7,404,509	B2	7/2008	Ortiz et al.
7,404,822	B2	7/2008	Viart et al.
7,407,074	B2	8/2008	Ortiz et al.
7,407,075	B2	8/2008	Holsten et al.
7,407,076	B2	8/2008	Racenet et al.
7,407,077	B2	8/2008	Ortiz et al.
7,407,078	B2	8/2008	Shelton, IV et al.
7,410,086	B2	8/2008	Ortiz et al.
7,413,563	B2	8/2008	Corcoran et al.
7,416,101	B2	8/2008	Shelton, IV et al.
7,418,078	B2	8/2008	Blanz et al.
RE40,514	E	9/2008	Mastri et al.
7,419,080	B2	9/2008	Smith et al.
7,419,081	B2	9/2008	Ehrenfels et al.
7,419,495	B2	9/2008	Menn et al.
7,422,136	B1	9/2008	Marczyk
7,422,138	B2	9/2008	Bilotti et al.
7,422,139	B2	9/2008	Shelton, IV et al.
7,424,965	B2	9/2008	Racenet et al.
7,427,607	B2	9/2008	Suzuki
7,431,188	B1	10/2008	Marczyk
7,431,189	B2	10/2008	Shelton, IV et al.
7,431,694	B2	10/2008	Stefanchik et al.
7,431,730	B2	10/2008	Viola
7,434,715	B2	10/2008	Shelton, IV et al.
7,434,717	B2	10/2008	Shelton, IV et al.
7,438,209	B1	10/2008	Hess et al.
7,438,718	B2	10/2008	Milliman et al.
7,439,354	B2	10/2008	Lenges et al.
7,441,684	B2	10/2008	Shelton, IV et al.
7,441,685	B1	10/2008	Boudreaux
7,442,201	B2	10/2008	Pugsley et al.
7,443,547	B2	10/2008	Moreno et al.
7,448,525	B2	11/2008	Shelton, IV et al.
7,451,904	B2	11/2008	Shelton, IV
7,455,208	B2	11/2008	Wales et al.
7,455,676	B2	11/2008	Holsten et al.
7,455,682	B2	11/2008	Viola
7,461,767	B2	12/2008	Viola et al.
7,462,187	B2	12/2008	Johnston et al.
7,464,846	B2	12/2008	Shelton, IV et al.
7,464,847	B2	12/2008	Viola et al.
7,464,849	B2	12/2008	Shelton, IV et al.
7,467,740	B2	12/2008	Shelton, IV et al.
7,467,849	B2	12/2008	Silverbrook et al.
7,472,814	B2	1/2009	Mastri et al.
7,472,815	B2	1/2009	Shelton, IV et al.
7,472,816	B2	1/2009	Holsten et al.
7,473,253	B2	1/2009	Dycus et al.
7,473,263	B2	1/2009	Johnston et al.
7,476,237	B2	1/2009	Taniguchi et al.
7,479,608	B2	1/2009	Smith
7,481,347	B2	1/2009	Roy
7,481,348	B2	1/2009	Marczyk
7,481,349	B2	1/2009	Holsten et al.
7,481,824	B2	1/2009	Boudreaux et al.
7,485,133	B2	2/2009	Cannon et al.
7,485,142	B2	2/2009	Milo
7,487,899	B2	2/2009	Shelton, IV et al.
7,490,749	B2	2/2009	Schall et al.
7,494,039	B2	2/2009	Racenet et al.
7,494,499	B2	2/2009	Nagase et al.

(56) **References Cited**

U.S. PATENT DOCUMENTS

7,494,501 B2 2/2009 Ahlberg et al.
7,500,979 B2 3/2009 Hueil et al.
7,501,198 B2 3/2009 Barlev et al.
7,503,474 B2 3/2009 Hillstead et al.
7,506,790 B2 3/2009 Shelton, IV
7,506,791 B2 3/2009 Omaits et al.
7,507,202 B2 3/2009 Schoellhorn
7,510,107 B2 3/2009 Timm et al.
7,510,566 B2 3/2009 Jacobs et al.
7,513,408 B2 4/2009 Shelton, IV et al.
7,517,356 B2 4/2009 Heinrich
7,524,320 B2 4/2009 Tierney et al.
7,530,984 B2 5/2009 Sonnenschein et al.
7,530,985 B2 5/2009 Takemoto et al.
7,533,906 B2 5/2009 Luettgen et al.
7,534,259 B2 5/2009 Lashinski et al.
7,540,867 B2 6/2009 Jinno et al.
7,542,807 B2 6/2009 Bertolero et al.
7,546,939 B2 6/2009 Adams et al.
7,546,940 B2 6/2009 Milliman et al.
7,547,312 B2 6/2009 Bauman et al.
7,549,563 B2 6/2009 Mather et al.
7,549,564 B2 6/2009 Boudreaux
7,549,998 B2 6/2009 Braun
7,552,854 B2 6/2009 Wixey et al.
7,556,185 B2 7/2009 Viola
7,556,186 B2 7/2009 Milliman
7,556,647 B2 7/2009 Drews et al.
7,559,449 B2 7/2009 Viola
7,559,450 B2 7/2009 Wales et al.
7,559,452 B2 7/2009 Wales et al.
7,559,937 B2 7/2009 de la Torre et al.
7,562,910 B2 7/2009 Kertesz et al.
7,563,862 B2 7/2009 Sieg et al.
7,565,993 B2 7/2009 Milliman et al.
7,566,300 B2 7/2009 Devierre et al.
7,567,045 B2 7/2009 Fristedt
7,568,603 B2 8/2009 Shelton, IV et al.
7,568,604 B2 8/2009 Ehrenfels et al.
7,568,619 B2 8/2009 Todd et al.
7,575,144 B2 8/2009 Ortiz et al.
7,583,063 B2 9/2009 Dooley
7,588,174 B2 9/2009 Holsten et al.
7,588,175 B2 9/2009 Timm et al.
7,588,176 B2 9/2009 Timm et al.
7,588,177 B2 9/2009 Racenet
7,591,783 B2 9/2009 Boulais et al.
7,591,818 B2 9/2009 Bertolero et al.
7,597,229 B2 10/2009 Boudreaux et al.
7,597,230 B2 10/2009 Racenet et al.
7,597,693 B2 10/2009 Garrison
7,600,663 B2 10/2009 Green
7,604,150 B2 10/2009 Boudreaux
7,604,151 B2 10/2009 Hess et al.
7,607,557 B2 10/2009 Shelton, IV et al.
7,611,038 B2 11/2009 Racenet et al.
7,611,474 B2 11/2009 Hibner et al.
7,615,003 B2 11/2009 Stefanchik et al.
7,615,067 B2 11/2009 Lee et al.
7,617,961 B2 11/2009 Viola
7,624,902 B2 12/2009 Marczyk et al.
7,624,903 B2 12/2009 Green et al.
7,625,370 B2 12/2009 Hart et al.
7,631,793 B2 12/2009 Rethy et al.
7,631,794 B2 12/2009 Rethy et al.
7,635,074 B2 12/2009 Olson et al.
7,637,409 B2 12/2009 Marczyk
7,637,410 B2 12/2009 Marczyk
7,638,958 B2 12/2009 Philipp et al.
7,641,091 B2 1/2010 Olson et al.
7,641,092 B2 1/2010 Kruszynski et al.
7,641,093 B2 1/2010 Doll et al.
7,641,095 B2 1/2010 Viola
7,644,783 B2 1/2010 Roberts et al.
7,644,848 B2 1/2010 Swayze et al.
7,645,230 B2 1/2010 Mikkaichi et al.
7,648,519 B2 1/2010 Lee et al.
7,650,185 B2 1/2010 Maile et al.
7,651,017 B2 1/2010 Ortiz et al.
7,651,498 B2 1/2010 Shifrin et al.
7,654,431 B2 2/2010 Hueil et al.
7,655,288 B2 2/2010 Bauman et al.
7,656,131 B2 2/2010 Embrey et al.
7,658,311 B2 2/2010 Boudreaux
7,658,312 B2 2/2010 Vidal et al.
7,659,219 B2 * 2/2010 Biran A61L 31/146 424/422
7,662,161 B2 2/2010 Briganti et al.
7,665,646 B2 2/2010 Prommersberger
7,665,647 B2 2/2010 Shelton, IV et al.
7,669,746 B2 3/2010 Shelton, IV
7,669,747 B2 3/2010 Weisenburgh, II et al.
7,670,334 B2 3/2010 Hueil et al.
7,673,780 B2 3/2010 Shelton, IV et al.
7,673,781 B2 3/2010 Swayze et al.
7,673,782 B2 3/2010 Hess et al.
7,673,783 B2 3/2010 Morgan et al.
7,674,253 B2 3/2010 Fisher et al.
7,674,255 B2 3/2010 Braun
7,674,263 B2 3/2010 Ryan
7,674,270 B2 3/2010 Layer
7,682,307 B2 3/2010 Danitz et al.
7,682,367 B2 3/2010 Shah et al.
7,686,201 B2 3/2010 Csiky
7,686,804 B2 3/2010 Johnson et al.
7,686,826 B2 3/2010 Lee et al.
7,688,028 B2 3/2010 Phillips et al.
7,691,098 B2 4/2010 Wallace et al.
7,691,103 B2 4/2010 Fernandez et al.
7,691,106 B2 4/2010 Schenberger et al.
7,694,865 B2 4/2010 Scirica
7,695,485 B2 4/2010 Whitman et al.
7,699,204 B2 4/2010 Viola
7,699,835 B2 4/2010 Lee et al.
7,699,844 B2 4/2010 Utley et al.
7,699,846 B2 4/2010 Ryan
7,699,856 B2 4/2010 Van Wyk et al.
7,699,859 B2 4/2010 Bombard et al.
7,699,860 B2 4/2010 Huitema et al.
7,703,653 B2 4/2010 Shah et al.
7,708,180 B2 5/2010 Murray et al.
7,708,181 B2 5/2010 Cole et al.
7,708,758 B2 5/2010 Lee et al.
7,712,182 B2 5/2010 Zeiler et al.
7,714,239 B2 5/2010 Smith
7,717,312 B2 5/2010 Beetel
7,717,313 B2 5/2010 Criscuolo et al.
7,717,846 B2 5/2010 Zirps et al.
7,718,180 B2 5/2010 Karp
7,718,556 B2 5/2010 Matsuda et al.
7,721,930 B2 5/2010 McKenna et al.
7,721,931 B2 5/2010 Shelton, IV et al.
7,721,933 B2 5/2010 Ehrenfels et al.
7,721,934 B2 5/2010 Shelton, IV et al.
7,721,936 B2 5/2010 Shalton, IV et al.
7,722,527 B2 5/2010 Bouchier et al.
7,722,607 B2 5/2010 Dumbauld et al.
7,722,610 B2 5/2010 Viola et al.
7,726,537 B2 6/2010 Olson et al.
7,726,538 B2 6/2010 Holsten et al.
7,726,539 B2 6/2010 Holsten et al.
7,727,954 B2 6/2010 McKay
7,729,742 B2 6/2010 Govari
7,731,072 B2 6/2010 Timm et al.
7,731,073 B2 6/2010 Wixey et al.
7,731,724 B2 6/2010 Huitema et al.
7,735,703 B2 6/2010 Morgan et al.
7,736,374 B2 6/2010 Vaughan et al.
7,738,971 B2 6/2010 Swayze et al.
7,740,159 B2 6/2010 Shelton, IV et al.
7,742,036 B2 6/2010 Grant et al.
7,743,960 B2 6/2010 Whitman et al.
7,744,624 B2 6/2010 Bettuchi
7,744,627 B2 6/2010 Orban, III et al.

(56) **References Cited**

U.S. PATENT DOCUMENTS

7,744,628	B2	6/2010	Viola
7,748,587	B2	7/2010	Haramiishi et al.
7,749,204	B2	7/2010	Dhanaraj et al.
7,751,870	B2	7/2010	Whitman
7,753,245	B2	7/2010	Boudreaux et al.
7,753,246	B2	7/2010	Scirica
7,753,904	B2	7/2010	Shelton, IV et al.
7,758,612	B2	7/2010	Shipp
7,766,207	B2	8/2010	Mather et al.
7,766,209	B2	8/2010	Baxter, III et al.
7,766,210	B2	8/2010	Shelton, IV et al.
7,766,821	B2	8/2010	Brunnen et al.
7,766,894	B2	8/2010	Weitzner et al.
7,770,773	B2	8/2010	Whitman et al.
7,770,774	B2	8/2010	Mastri et al.
7,770,775	B2	8/2010	Shelton, IV et al.
7,770,776	B2	8/2010	Chen et al.
7,771,396	B2	8/2010	Stefanchik et al.
7,772,720	B2	8/2010	McGee et al.
7,776,037	B2	8/2010	Odom
7,776,060	B2	8/2010	Mooradian et al.
7,778,004	B2	8/2010	Nerheim et al.
7,780,054	B2	8/2010	Wales
7,780,055	B2	8/2010	Scirica et al.
7,780,663	B2	8/2010	Yates et al.
7,780,685	B2	8/2010	Hunt et al.
7,784,662	B2	8/2010	Wales et al.
7,784,663	B2	8/2010	Shelton, IV
7,787,256	B2	8/2010	Chan et al.
7,789,875	B2	9/2010	Brock et al.
7,789,883	B2	9/2010	Takashino et al.
7,789,889	B2	9/2010	Zubik et al.
7,793,812	B2	9/2010	Moore et al.
7,794,475	B2	9/2010	Hess et al.
7,798,386	B2	9/2010	Schall et al.
7,799,039	B2	9/2010	Shelton, IV et al.
7,799,044	B2	9/2010	Johnston et al.
7,799,965	B2	9/2010	Patel et al.
7,803,151	B2	9/2010	Whitman
7,806,891	B2	10/2010	Nowlin et al.
7,810,690	B2	10/2010	Bilotti et al.
7,810,691	B2	10/2010	Boyden et al.
7,810,692	B2	10/2010	Hall et al.
7,810,693	B2	10/2010	Broehl et al.
7,815,092	B2	10/2010	Whitman et al.
7,815,565	B2	10/2010	Stefanchik et al.
7,819,296	B2	10/2010	Hueil et al.
7,819,297	B2	10/2010	Doll et al.
7,819,298	B2	10/2010	Hall et al.
7,819,299	B2	10/2010	Shelton, IV et al.
7,819,884	B2	10/2010	Lee et al.
7,819,886	B2	10/2010	Whitfield et al.
7,823,592	B2	11/2010	Bettuchi et al.
7,823,760	B2	11/2010	Zemlok et al.
7,824,401	B2	11/2010	Manzo et al.
7,824,426	B2	11/2010	Racenet et al.
7,828,189	B2	11/2010	Holsten et al.
7,828,794	B2	11/2010	Sartor
7,828,808	B2	11/2010	Hinman et al.
7,831,292	B2	11/2010	Quaid et al.
7,832,408	B2	11/2010	Shelton, IV et al.
7,832,611	B2	11/2010	Boyden et al.
7,832,612	B2	11/2010	Baxter, III et al.
7,833,234	B2	11/2010	Bailly et al.
7,836,400	B2	11/2010	May et al.
7,837,079	B2	11/2010	Holsten et al.
7,837,080	B2	11/2010	Schwemberger
7,837,081	B2	11/2010	Holsten et al.
7,837,694	B2	11/2010	Tethrake et al.
7,838,789	B2	11/2010	Stoffers et al.
7,841,503	B2	11/2010	Sonnenschein et al.
7,842,025	B2	11/2010	Coleman et al.
7,842,028	B2	11/2010	Lee
7,845,533	B2	12/2010	Marczyk et al.
7,845,534	B2	12/2010	Viola et al.
7,845,535	B2	12/2010	Scircia
7,845,536	B2	12/2010	Viola et al.
7,845,537	B2	12/2010	Shelton, IV et al.
7,846,149	B2	12/2010	Jankowski
7,850,642	B2	12/2010	Moll et al.
7,850,982	B2	12/2010	Stopek et al.
7,854,736	B2	12/2010	Ryan
7,857,183	B2	12/2010	Shelton, IV
7,857,185	B2	12/2010	Swayze et al.
7,857,186	B2	12/2010	Baxter, III et al.
7,857,813	B2	12/2010	Schmitz et al.
7,861,906	B2	1/2011	Doll et al.
7,862,579	B2	1/2011	Ortiz et al.
7,866,525	B2	1/2011	Scirica
7,866,527	B2	1/2011	Hall et al.
7,866,528	B2	1/2011	Olson et al.
7,870,989	B2	1/2011	Viola et al.
7,871,418	B2	1/2011	Thompson et al.
7,879,070	B2	2/2011	Ortiz et al.
7,883,465	B2	2/2011	Donofrio et al.
7,886,951	B2	2/2011	Hessler
7,886,952	B2	2/2011	Scirica et al.
7,887,530	B2	2/2011	Zemlok et al.
7,887,535	B2	2/2011	Lands et al.
7,891,531	B1	2/2011	Ward
7,891,532	B2	2/2011	Mastri et al.
7,892,245	B2	2/2011	Liddicoat et al.
7,893,586	B2	2/2011	West et al.
7,896,214	B2	3/2011	Farascioni
7,896,215	B2	3/2011	Adams et al.
7,896,877	B2	3/2011	Hall et al.
7,896,895	B2	3/2011	Boudreaux et al.
7,900,805	B2	3/2011	Shelton, IV et al.
7,905,380	B2	3/2011	Shelton, IV et al.
7,905,381	B2	3/2011	Baxter, III et al.
7,905,889	B2	3/2011	Catanese, III et al.
7,905,902	B2	3/2011	Huitema et al.
7,909,191	B2	3/2011	Baker et al.
7,909,220	B2	3/2011	Viola
7,909,221	B2	3/2011	Viola et al.
7,913,891	B2	3/2011	Doll et al.
7,913,893	B2	3/2011	Mastri et al.
7,914,543	B2	3/2011	Roth et al.
7,914,551	B2	3/2011	Ortiz et al.
7,918,230	B2	4/2011	Whitman et al.
7,918,376	B1	4/2011	Knodel et al.
7,918,377	B2	4/2011	Measamer et al.
7,918,848	B2	4/2011	Lau et al.
7,918,867	B2	4/2011	Dana et al.
7,922,061	B2	4/2011	Shelton, IV et al.
7,922,063	B2	4/2011	Zemlok et al.
7,922,743	B2	4/2011	Heinrich et al.
7,923,144	B2	4/2011	Kohn et al.
7,926,691	B2	4/2011	Viola et al.
7,927,328	B2	4/2011	Orszulak et al.
7,928,281	B2	4/2011	Augustine
7,930,065	B2	4/2011	Larkin et al.
7,931,660	B2	4/2011	Aranyi et al.
7,931,695	B2	4/2011	Ringeisen
7,934,630	B2	5/2011	Shelton, Iv et al.
7,934,631	B2	5/2011	Balbierz et al.
7,935,773	B2	5/2011	Hadba et al.
7,938,307	B2	5/2011	Bettuchi
7,941,865	B2	5/2011	Seman, Jr. et al.
7,942,303	B2	5/2011	Shah
7,942,890	B2	5/2011	D'Agostino et al.
7,944,175	B2	5/2011	Mori et al.
7,945,792	B2	5/2011	Cherpantier
7,950,560	B2	5/2011	Zemlok et al.
7,950,561	B2	5/2011	Aranyi
7,951,071	B2	5/2011	Whitman et al.
7,951,166	B2	5/2011	Orban, Iii et al.
7,954,682	B2	6/2011	Giordano et al.
7,954,684	B2	6/2011	Boudreaux
7,954,686	B2	6/2011	Baxter, Iii et al.
7,954,687	B2	6/2011	Zemlok et al.
7,955,257	B2	6/2011	Frasier et al.
7,955,322	B2	6/2011	Devengenzo et al.
7,955,380	B2	6/2011	Chu et al.

(56) **References Cited**

U.S. PATENT DOCUMENTS

7,959,050	B2	6/2011	Smith et al.
7,959,051	B2	6/2011	Smith et al.
7,959,052	B2	6/2011	Sonnenschein et al.
7,963,432	B2	6/2011	Knodel et al.
7,963,433	B2	6/2011	Whitman et al.
7,963,963	B2	6/2011	Francischelli et al.
7,963,964	B2	6/2011	Santilli et al.
7,966,799	B2	6/2011	Morgan et al.
7,967,178	B2	6/2011	Scirica et al.
7,967,179	B2	6/2011	Olson et al.
7,967,180	B2	6/2011	Scirica
7,967,181	B2	6/2011	Viola et al.
7,967,839	B2	6/2011	Flock et al.
7,972,298	B2	7/2011	Wallace et al.
7,980,443	B2	7/2011	Scheib et al.
7,987,405	B2	7/2011	Turner et al.
7,988,026	B2	8/2011	Knodel et al.
7,988,027	B2	8/2011	Olson et al.
7,988,028	B2	8/2011	Farascioni et al.
7,992,757	B2	8/2011	Wheeler et al.
7,993,360	B2	8/2011	Hacker et al.
7,994,670	B2	8/2011	Ji
7,997,468	B2	8/2011	Farascioni
7,997,469	B2	8/2011	Olson et al.
8,002,696	B2	8/2011	Suzuki
8,002,784	B2	8/2011	Jinno et al.
8,002,785	B2	8/2011	Weiss et al.
8,002,795	B2	8/2011	Beetel
8,006,365	B2	8/2011	Levin et al.
8,006,885	B2	8/2011	Marczyk
8,006,889	B2	8/2011	Adams et al.
8,007,511	B2	8/2011	Brock et al.
8,011,550	B2	9/2011	Aranyi et al.
8,011,551	B2	9/2011	Marczyk et al.
8,011,553	B2	9/2011	Mastri et al.
8,011,555	B2	9/2011	Tarinelli et al.
8,012,170	B2	9/2011	Whitman et al.
8,016,176	B2	9/2011	Kasvikis et al.
8,016,177	B2	9/2011	Bettuchi et al.
8,016,178	B2	9/2011	Olson et al.
8,016,855	B2	9/2011	Whitman et al.
8,016,858	B2	9/2011	Whitman
8,016,881	B2	9/2011	Furst
8,020,742	B2	9/2011	Marczyk
8,020,743	B2	9/2011	Shelton, Iv
8,021,375	B2	9/2011	Aldrich et al.
8,025,199	B2	9/2011	Whitman et al.
8,028,883	B2	10/2011	Stopek
8,028,884	B2	10/2011	Sniffin et al.
8,028,885	B2	10/2011	Smith et al.
8,034,077	B2	10/2011	Smith et al.
8,034,363	B2	10/2011	Li et al.
8,037,591	B2	10/2011	Spivey et al.
8,038,045	B2	10/2011	Bettuchi et al.
8,038,046	B2	10/2011	Smith et al.
8,038,686	B2	10/2011	Huitema et al.
8,043,207	B2	10/2011	Adams
8,043,328	B2	10/2011	Hahnen et al.
8,044,536	B2	10/2011	Nguyen et al.
8,047,236	B2	11/2011	Perry
8,048,503	B2	11/2011	Farnsworth et al.
8,056,787	B2	11/2011	Boudreaux et al.
8,056,788	B2	11/2011	Mastri et al.
8,057,508	B2	11/2011	Shelton, Iv
8,058,771	B2	11/2011	Giordano et al.
8,060,250	B2	11/2011	Reiland et al.
8,061,576	B2	11/2011	Cappola
8,062,330	B2	11/2011	Prommersberger et al.
8,063,619	B2	11/2011	Zhu et al.
8,066,167	B2	11/2011	Measamer et al.
8,066,168	B2	11/2011	Vidal et al.
D650,074	S	12/2011	Hunt et al.
8,070,033	B2	12/2011	Milliman et al.
8,070,035	B2	12/2011	Holsten et al.
8,070,743	B2	12/2011	Kagan et al.
8,075,571	B2	12/2011	Vitali et al.
8,079,950	B2	12/2011	Stern et al.
8,080,004	B2	12/2011	Downey et al.
8,083,118	B2	12/2011	Milliman et al.
8,083,119	B2	12/2011	Prommersberger
8,083,120	B2	12/2011	Shelton, IV et al.
8,084,001	B2	12/2011	Burns et al.
8,085,013	B2	12/2011	Wei et al.
8,087,563	B2	1/2012	Milliman et al.
8,089,509	B2	1/2012	Chatenever et al.
8,091,756	B2	1/2012	Viola
8,092,443	B2	1/2012	Bischoff
8,092,932	B2	1/2012	Phillips et al.
8,096,458	B2	1/2012	Hessler
8,097,017	B2	1/2012	Viola
8,100,310	B2	1/2012	Zemlok
8,100,872	B2	1/2012	Patel
8,102,278	B2	1/2012	Deck et al.
8,105,350	B2	1/2012	Lee et al.
8,107,925	B2	1/2012	Natsuno et al.
8,108,072	B2	1/2012	Zhao et al.
8,109,426	B2	2/2012	Milliman et al.
8,110,208	B1	2/2012	Hen
8,113,405	B2	2/2012	Milliman
8,113,410	B2	2/2012	Hall et al.
8,114,100	B2	2/2012	Smith et al.
8,122,128	B2	2/2012	Burke, Ii et al.
8,123,103	B2	2/2012	Milliman
8,123,766	B2	2/2012	Bauman et al.
8,123,767	B2	2/2012	Bauman et al.
8,125,168	B2	2/2012	Johnson et al.
8,127,975	B2	3/2012	Olson et al.
8,127,976	B2	3/2012	Scirica et al.
8,128,624	B2	3/2012	Couture et al.
8,128,643	B2	3/2012	Aranyi et al.
8,128,645	B2	3/2012	Sonnenschein et al.
8,132,703	B2	3/2012	Milliman et al.
8,132,706	B2	3/2012	Marczyk et al.
8,134,306	B2	3/2012	Drader et al.
8,136,712	B2	3/2012	Zingman
8,136,713	B2	3/2012	Hathaway et al.
8,137,339	B2	3/2012	Jinno et al.
8,140,417	B2	3/2012	Shibata
8,141,762	B2	3/2012	Bedi et al.
8,141,763	B2	3/2012	Milliman
8,142,425	B2	3/2012	Eggers
8,146,790	B2	4/2012	Milliman
8,147,485	B2	4/2012	Wham et al.
8,152,041	B2	4/2012	Kostrzewski
8,154,239	B2	4/2012	Katsuki et al.
8,157,145	B2	4/2012	Shelton, Iv et al.
8,157,148	B2	4/2012	Scirica
8,157,151	B2	4/2012	Ingmanson et al.
8,157,152	B2	4/2012	Holsten et al.
8,157,153	B2	4/2012	Shelton, Iv et al.
8,157,793	B2	4/2012	Omori et al.
8,161,977	B2	4/2012	Shelton, Iv et al.
8,162,138	B2	4/2012	Bettenhausen et al.
8,162,197	B2	4/2012	Mastri et al.
8,167,185	B2	5/2012	Shelton, Iv et al.
8,167,895	B2	5/2012	D'Agostino et al.
8,167,898	B1	5/2012	Schaller et al.
8,170,241	B2	5/2012	Roe et al.
8,172,120	B2	5/2012	Boyden et al.
8,172,122	B2	5/2012	Kasvikis et al.
8,172,124	B2	5/2012	Shelton, Iv et al.
8,177,797	B2	5/2012	Shimoji et al.
8,179,705	B2	5/2012	Chapuis
8,180,458	B2	5/2012	Kane et al.
8,181,840	B2	5/2012	Milliman
8,186,555	B2	5/2012	Shelton, Iv et al.
8,186,560	B2	5/2012	Hess et al.
8,191,752	B2	6/2012	Scirica
8,192,460	B2	6/2012	Orban, Iii et al.
8,196,795	B2	6/2012	Moore et al.
8,196,796	B2	6/2012	Shelton, Iv et al.
8,201,720	B2	6/2012	Hessler
8,201,721	B2	6/2012	Zemlok et al.
8,205,779	B2	6/2012	Ma et al.

(56) **References Cited**

U.S. PATENT DOCUMENTS

8,205,780	B2	6/2012	Sorrentino et al.
8,205,781	B2	6/2012	Baxter, Iii et al.
8,210,411	B2	7/2012	Yates et al.
8,210,414	B2	7/2012	Bettuchi et al.
8,210,415	B2	7/2012	Ward
8,210,416	B2	7/2012	Milliman et al.
8,211,125	B2	7/2012	Spivey
8,214,019	B2	7/2012	Govari et al.
8,215,531	B2	7/2012	Shelton, Iv et al.
8,215,533	B2	7/2012	Viola et al.
8,220,468	B2	7/2012	Cooper et al.
8,220,688	B2	7/2012	Laurent et al.
8,220,690	B2	7/2012	Hess et al.
8,221,424	B2	7/2012	Cha
8,225,799	B2	7/2012	Bettuchi
8,226,715	B2	7/2012	Hwang et al.
8,227,946	B2	7/2012	Kim
8,228,048	B2	7/2012	Spencer
8,231,040	B2	7/2012	Zemlok et al.
8,231,041	B2	7/2012	Marczyk et al.
8,231,042	B2	7/2012	Hessler et al.
8,231,043	B2	7/2012	Tarinelli et al.
8,236,010	B2	8/2012	Ortiz et al.
8,241,271	B2	8/2012	Millman et al.
8,241,308	B2	8/2012	Kortenbach et al.
8,241,322	B2	8/2012	Whitman et al.
8,245,594	B2	8/2012	Rogers et al.
8,245,898	B2	8/2012	Smith et al.
8,245,899	B2	8/2012	Swensgard et al.
8,245,900	B2	8/2012	Scirica
8,245,901	B2	8/2012	Stopek
8,246,637	B2	8/2012	Viola et al.
8,256,654	B2	9/2012	Bettuchi et al.
8,256,655	B2	9/2012	Sniffin et al.
8,256,656	B2	9/2012	Milliman et al.
8,257,251	B2	9/2012	Shelton, IV et al.
8,257,356	B2	9/2012	Bleich et al.
8,257,391	B2	9/2012	Orban, Iii et al.
8,262,655	B2	9/2012	Ghabrial et al.
8,267,300	B2	9/2012	Boudreaux
8,267,924	B2	9/2012	Zemlok et al.
8,267,946	B2	9/2012	Whitfield et al.
8,267,951	B2	9/2012	Whayne et al.
8,269,121	B2	9/2012	Smith
8,272,553	B2	9/2012	Mastri et al.
8,272,554	B2	9/2012	Whitman et al.
8,273,404	B2	9/2012	Dave et al.
8,276,801	B2	10/2012	Zemlok et al.
8,276,802	B2	10/2012	Kostrzewski
8,277,473	B2	10/2012	Sunaoshi et al.
8,281,973	B2	10/2012	Wenchell et al.
8,281,974	B2	10/2012	Hessler et al.
8,282,654	B2	10/2012	Ferrari et al.
8,286,845	B2	10/2012	Perry et al.
8,287,561	B2	10/2012	Nunez et al.
8,292,147	B2	10/2012	Viola
8,292,150	B2	10/2012	Bryant
8,292,151	B2	10/2012	Viola
8,292,152	B2	10/2012	Milliman et al.
8,292,155	B2	10/2012	Shelton, Iv et al.
8,292,157	B2	10/2012	Smith et al.
8,292,888	B2	10/2012	Whitman
8,298,161	B2	10/2012	Vargas
8,298,677	B2	10/2012	Wiesner et al.
8,302,323	B2	11/2012	Fortier et al.
8,308,040	B2	11/2012	Huang et al.
8,308,042	B2	11/2012	Aranyi
8,308,046	B2	11/2012	Prommersberger
8,308,659	B2	11/2012	Scheibe et al.
8,313,496	B2	11/2012	Sauer et al.
8,313,509	B2	11/2012	Kostrzewski
8,317,070	B2	11/2012	Hueil et al.
8,317,071	B1	11/2012	Knodel
8,317,074	B2	11/2012	Ortiz et al.
8,317,790	B2	11/2012	Bell et al.
8,319,002	B2	11/2012	Daniels et al.
8,322,455	B2	12/2012	Shelton, IV et al.
8,322,589	B2	12/2012	Boudreaux
8,322,590	B2	12/2012	Patel et al.
8,323,789	B2	12/2012	Rozhin et al.
8,328,061	B2	12/2012	Kasvikis
8,328,062	B2	12/2012	Viola
8,328,063	B2	12/2012	Milliman et al.
8,328,064	B2	12/2012	Racenet et al.
8,328,802	B2	12/2012	Deville et al.
8,328,823	B2	12/2012	Aranyi et al.
8,333,313	B2	12/2012	Boudreaux et al.
8,333,764	B2	12/2012	Francischelli et al.
8,336,753	B2	12/2012	Olson et al.
8,336,754	B2	12/2012	Cappola et al.
8,342,377	B2	1/2013	Milliman et al.
8,342,378	B2	1/2013	Marczyk et al.
8,342,379	B2	1/2013	Whitman et al.
8,348,123	B2	1/2013	Scirica et al.
8,348,125	B2	1/2013	Viola et al.
8,348,126	B2	1/2013	Olson et al.
8,348,127	B2	1/2013	Marczyk
8,348,129	B2	1/2013	Bedi et al.
8,348,130	B2	1/2013	Shah et al.
8,348,131	B2	1/2013	Omaits et al.
8,348,972	B2	1/2013	Soltz et al.
8,353,437	B2	1/2013	Boudreaux
8,353,438	B2	1/2013	Baxter, III et al.
8,353,439	B2	1/2013	Baxter, III et al.
8,356,740	B1	1/2013	Knodel
8,357,144	B2	1/2013	Whitman et al.
8,360,296	B2	1/2013	Zingman
8,360,297	B2	1/2013	Shelton, IV et al.
8,360,298	B2	1/2013	Farascioni et al.
8,360,299	B2	1/2013	Zemlok et al.
8,361,501	B2	1/2013	Ditizio et al.
8,365,973	B1	2/2013	White et al.
8,365,975	B1	2/2013	Manoux et al.
8,365,976	B2	2/2013	Hess et al.
8,366,559	B2	2/2013	Papenfuss et al.
8,371,491	B2	2/2013	Huitema et al.
8,371,492	B2	2/2013	Aranyi et al.
8,371,493	B2	2/2013	Aranyi et al.
8,372,094	B2	2/2013	Bettuchi et al.
8,376,865	B2	2/2013	Forster et al.
8,377,044	B2	2/2013	Coe et al.
8,388,633	B2	3/2013	Rousseau et al.
8,393,513	B2	3/2013	Jankowski
8,393,514	B2	3/2013	Shelton, IV et al.
8,393,516	B2	3/2013	Kostrzewski
8,397,971	B2	3/2013	Yates et al.
8,398,633	B2	3/2013	Mueller
8,398,673	B2	3/2013	Hinchliffe et al.
8,403,138	B2	3/2013	Weisshaupt et al.
8,403,198	B2	3/2013	Sorrentino et al.
8,403,832	B2	3/2013	Cunningham et al.
8,403,945	B2	3/2013	Whitfield et al.
8,408,439	B2	4/2013	Huang et al.
8,408,442	B2	4/2013	Racenet et al.
8,409,079	B2	4/2013	Okamoto et al.
8,409,174	B2	4/2013	Omori
8,409,222	B2	4/2013	Whitfield et al.
8,409,223	B2	4/2013	Sorrentino et al.
8,413,870	B2	4/2013	Pastorelli et al.
8,413,871	B2	4/2013	Racenet et al.
8,413,872	B2	4/2013	Patel
8,414,577	B2	4/2013	Boudreaux et al.
8,418,909	B2	4/2013	Kostrzewski
8,424,737	B2	4/2013	Scirica
8,424,739	B2	4/2013	Racenet et al.
8,424,740	B2	4/2013	Shelton, IV et al.
8,424,741	B2	4/2013	McGuckin, Jr. et al.
8,425,600	B2	4/2013	Maxwell
8,430,292	B2	4/2013	Patel et al.
8,430,892	B2	4/2013	Bindra et al.
8,430,898	B2	4/2013	Wiener et al.
8,439,246	B1	5/2013	Knodel
8,444,036	B2	5/2013	Shelton, IV
8,444,549	B2	5/2013	Viola et al.

(56) **References Cited**

U.S. PATENT DOCUMENTS

8,453,904	B2	6/2013	Eskaros et al.
8,453,906	B2	6/2013	Huang et al.
8,453,907	B2	6/2013	Laurent et al.
8,453,908	B2	6/2013	Bedi et al.
8,453,912	B2	6/2013	Mastri et al.
8,453,914	B2	6/2013	Laurent et al.
8,454,628	B2	6/2013	Smith et al.
8,457,757	B2	6/2013	Cauller et al.
8,459,520	B2	6/2013	Giordano et al.
8,459,525	B2	6/2013	Yates et al.
8,464,922	B2	6/2013	Marczyk
8,464,923	B2	6/2013	Shelton, IV
8,464,924	B2	6/2013	Gresham et al.
8,464,925	B2	6/2013	Hull et al.
8,465,502	B2	6/2013	Zergiebel
8,469,973	B2	6/2013	Meade et al.
8,474,677	B2	7/2013	Woodard, Jr. et al.
8,475,453	B2	7/2013	Marczyk et al.
8,475,474	B2	7/2013	Bombard et al.
8,479,969	B2	7/2013	Shelton, IV
8,480,703	B2	7/2013	Nicholas et al.
8,485,412	B2	7/2013	Shelton, IV et al.
8,485,413	B2	7/2013	Scheib et al.
8,490,853	B2	7/2013	Criscuolo et al.
8,491,581	B2	7/2013	Deville et al.
8,496,156	B2	7/2013	Sniffin et al.
8,496,683	B2	7/2013	Prommersberger et al.
8,499,992	B2	8/2013	Whitman et al.
8,499,993	B2	8/2013	Shelton, IV et al.
8,500,762	B2	8/2013	Sholev et al.
8,506,557	B2	8/2013	Zemlok et al.
8,506,580	B2	8/2013	Zergiebel et al.
8,506,581	B2	8/2013	Wingardner, III et al.
8,511,308	B2	8/2013	Hecox et al.
8,512,359	B2	8/2013	Whitman et al.
8,517,239	B2	8/2013	Scheib et al.
8,517,241	B2	8/2013	Nicholas et al.
8,517,243	B2	8/2013	Giordano et al.
8,517,244	B2	8/2013	Shelton, IV et al.
8,521,273	B2	8/2013	Kliman
8,523,043	B2	9/2013	Ullrich et al.
8,523,881	B2	9/2013	Cabiri et al.
8,523,900	B2	9/2013	Jinno et al.
8,529,588	B2	9/2013	Ahlberg et al.
8,529,600	B2	9/2013	Woodard, Jr. et al.
8,529,819	B2	9/2013	Ostapoff et al.
8,534,528	B2	9/2013	Shelton, IV
8,535,304	B2	9/2013	Sklar et al.
8,540,128	B2	9/2013	Shelton, IV et al.
8,540,129	B2	9/2013	Baxter, III et al.
8,540,130	B2	9/2013	Moore et al.
8,540,131	B2	9/2013	Swayze
8,540,133	B2	9/2013	Bedi et al.
8,540,733	B2	9/2013	Whitman et al.
8,540,735	B2	9/2013	Mitelberg et al.
8,551,076	B2	10/2013	Duval et al.
8,556,151	B2	10/2013	Viola
8,556,918	B2	10/2013	Bauman et al.
8,561,870	B2	10/2013	Baxter, III et al.
8,561,873	B2	10/2013	Ingmanson et al.
8,567,656	B2	10/2013	Shelton, IV et al.
8,573,461	B2	11/2013	Shelton, IV et al.
8,573,465	B2	11/2013	Shelton, IV
8,574,199	B2	11/2013	Von BÜlow et al.
8,574,263	B2	11/2013	Mueller
8,575,880	B2	11/2013	Grantz
8,579,176	B2	11/2013	Smith et al.
8,579,178	B2	11/2013	Holsten et al.
8,579,897	B2	11/2013	Vakharia et al.
8,579,937	B2	11/2013	Gresham
8,584,919	B2	11/2013	Hueil et al.
8,585,721	B2	11/2013	Kirsch
8,590,762	B2	11/2013	Hess et al.
8,602,287	B2	12/2013	Yates et al.
8,602,288	B2	12/2013	Shelton, IV et al.
8,603,135	B2	12/2013	Mueller
8,608,044	B2	12/2013	Hueil et al.
8,608,045	B2	12/2013	Smith et al.
8,608,046	B2	12/2013	Laurent et al.
8,608,745	B2	12/2013	Guzman et al.
8,613,383	B2	12/2013	Beckman et al.
8,616,431	B2	12/2013	Timm et al.
8,622,274	B2	1/2014	Yates et al.
8,622,275	B2	1/2014	Baxter, III et al.
8,628,518	B2	1/2014	Blumenkranz et al.
8,628,545	B2	1/2014	Cabrera et al.
8,631,987	B2	1/2014	Shelton, IV et al.
8,632,462	B2	1/2014	Yoo et al.
8,632,525	B2	1/2014	Kerr et al.
8,632,535	B2	1/2014	Shelton, IV et al.
8,632,563	B2	1/2014	Nagase et al.
8,636,187	B2	1/2014	Hueil et al.
8,636,736	B2	1/2014	Yates et al.
8,636,766	B2	1/2014	Milliman et al.
8,640,788	B2	2/2014	Dachs, II et al.
8,647,258	B2	2/2014	Aranyi et al.
8,652,120	B2	2/2014	Giordano et al.
8,652,151	B2	2/2014	Lehman et al.
8,657,174	B2	2/2014	Yates et al.
8,657,176	B2	2/2014	Shelton, Iv et al.
8,657,177	B2	2/2014	Scirica et al.
8,657,178	B2	2/2014	Hueil et al.
8,657,482	B2	2/2014	Malackowski et al.
8,662,370	B2	3/2014	Takei
8,663,192	B2	3/2014	Hester et al.
8,668,129	B2	3/2014	Olson
8,668,130	B2	3/2014	Hess et al.
8,672,206	B2	3/2014	Aranyi et al.
8,672,207	B2	3/2014	Shelton, IV et al.
8,672,208	B2	3/2014	Hess et al.
8,673,210	B2	3/2014	Deshays
8,678,263	B2	3/2014	Viola
8,679,093	B2	3/2014	Farra
8,679,098	B2	3/2014	Hart
8,679,137	B2	3/2014	Bauman et al.
8,679,454	B2	3/2014	Guire et al.
8,684,250	B2	4/2014	Bettuchi et al.
8,684,253	B2	4/2014	Giordano et al.
8,685,020	B2	4/2014	Weizman et al.
8,695,866	B2	4/2014	Leimbach et al.
8,696,665	B2	4/2014	Hunt et al.
8,701,958	B2	4/2014	Shelton, IV et al.
8,701,959	B2	4/2014	Shah
8,708,211	B2	4/2014	Zemlok et al.
8,708,213	B2	4/2014	Shelton, IV et al.
8,715,256	B2	5/2014	Greener
8,720,766	B2	5/2014	Hess et al.
8,721,630	B2	5/2014	Ortiz et al.
8,721,666	B2	5/2014	Schroeder et al.
8,727,197	B2	5/2014	Hess et al.
8,727,200	B2	5/2014	Roy
8,728,119	B2	5/2014	Cummins
8,733,613	B2	5/2014	Huitema et al.
8,733,614	B2	5/2014	Ross et al.
8,734,478	B2	5/2014	Widenhouse et al.
8,739,033	B2	5/2014	Rosenberg
8,740,034	B2	6/2014	Morgan et al.
8,740,037	B2	6/2014	Shelton, IV et al.
8,740,038	B2	6/2014	Shelton, IV et al.
8,740,987	B2	6/2014	Geremakis et al.
8,746,529	B2	6/2014	Shelton, IV et al.
8,746,530	B2	6/2014	Giordano et al.
8,746,535	B2	6/2014	Shelton, IV et al.
8,747,238	B2	6/2014	Shelton, IV et al.
8,752,264	B2	6/2014	Ackley et al.
8,752,699	B2	6/2014	Morgan et al.
8,752,747	B2	6/2014	Shelton, IV et al.
8,752,749	B2	6/2014	Moore et al.
8,757,465	B2	6/2014	Woodard, Jr. et al.
8,758,235	B2	6/2014	Jaworek
8,758,391	B2	6/2014	Swayze et al.
8,758,438	B2	6/2014	Boyce et al.
8,763,875	B2	7/2014	Morgan et al.
8,763,877	B2	7/2014	Schall et al.

(56) **References Cited**

U.S. PATENT DOCUMENTS

8,763,879	B2	7/2014	Shelton, IV et al.
8,771,169	B2	7/2014	Whitman et al.
8,777,004	B2	7/2014	Shelton, IV et al.
8,783,541	B2	7/2014	Shelton, IV et al.
8,783,542	B2	7/2014	Riestenberg et al.
8,783,543	B2	7/2014	Shelton, IV et al.
8,784,404	B2	7/2014	Doyle et al.
8,784,415	B2	7/2014	Malackowski et al.
8,789,737	B2	7/2014	Hodgkinson et al.
8,789,739	B2	7/2014	Swensgard
8,789,740	B2	7/2014	Baxter, III et al.
8,789,741	B2	7/2014	Baxter, III et al.
8,790,684	B2	7/2014	Dave et al.
8,794,496	B2	8/2014	Scirica
8,794,497	B2	8/2014	Zingman
8,795,276	B2	8/2014	Dietz et al.
8,800,838	B2	8/2014	Shelton, IV
8,800,839	B2	8/2014	Beetel
8,800,841	B2	8/2014	Ellerhorst et al.
8,801,734	B2	8/2014	Shelton, IV et al.
8,801,735	B2	8/2014	Shelton, IV et al.
8,801,752	B2	8/2014	Fortier et al.
8,806,973	B2	8/2014	Ross et al.
8,807,414	B2	8/2014	Ross et al.
8,808,294	B2	8/2014	Fox et al.
8,808,311	B2	8/2014	Heinrich et al.
8,813,866	B2	8/2014	Suzuki
8,814,024	B2	8/2014	Woodard, Jr. et al.
8,814,025	B2	8/2014	Miller et al.
8,820,603	B2	9/2014	Shelton, IV et al.
8,820,605	B2	9/2014	Shelton, IV
8,820,606	B2	9/2014	Hodgkinson
8,820,607	B2	9/2014	Marczyk
8,827,133	B2	9/2014	Shelton, IV et al.
8,827,903	B2	9/2014	Shelton, IV et al.
8,833,632	B2	9/2014	Swensgard
8,840,003	B2	9/2014	Morgan et al.
8,840,603	B2	9/2014	Shelton, IV et al.
8,844,789	B2	9/2014	Shelton, IV et al.
8,851,354	B2	10/2014	Swensgard et al.
8,852,199	B2	10/2014	Deslauriers et al.
8,857,693	B2	10/2014	Schuckmann et al.
8,857,694	B2	10/2014	Shelton, IV et al.
8,858,571	B2	10/2014	Shelton, IV et al.
8,858,590	B2	10/2014	Shelton, IV et al.
8,864,007	B2	10/2014	Widenhouse et al.
8,864,009	B2	10/2014	Shelton, IV et al.
8,870,050	B2	10/2014	Hodgkinson
8,875,971	B2	11/2014	Hall et al.
8,875,972	B2	11/2014	Weisenburgh, IV et al.
8,876,857	B2	11/2014	Burbank
8,893,946	B2	11/2014	Boudreaux et al.
8,893,949	B2	11/2014	Shelton, IV et al.
8,899,463	B2	12/2014	Schall et al.
8,899,464	B2	12/2014	Hueil et al.
8,899,465	B2	12/2014	Shelton, IV et al.
8,899,466	B2	12/2014	Baxter, III et al.
8,905,977	B2	12/2014	Shelton et al.
8,911,426	B2	12/2014	Coppeta et al.
8,911,471	B2	12/2014	Spivey et al.
8,920,438	B2	12/2014	Aranyi et al.
8,925,782	B2	1/2015	Shelton, IV
8,925,783	B2	1/2015	Zemlok et al.
8,925,788	B2	1/2015	Hess et al.
8,926,598	B2	1/2015	Mollere et al.
8,931,682	B2	1/2015	Timm et al.
8,936,614	B2	1/2015	Allen, IV
8,939,343	B2	1/2015	Milliman et al.
8,939,344	B2	1/2015	Olson et al.
8,955,732	B2	2/2015	Zemlok et al.
8,956,342	B1	2/2015	Russo et al.
8,960,520	B2	2/2015	McCuen
8,960,521	B2	2/2015	Kostrzewski
8,961,504	B2	2/2015	Hoarau et al.
8,967,443	B2	3/2015	McCuen
8,967,446	B2	3/2015	Beardsley et al.
8,968,276	B2	3/2015	Zemlok et al.
8,968,312	B2	3/2015	Marczyk et al.
8,968,337	B2	3/2015	Whitfield et al.
8,968,340	B2	3/2015	Chowaniec et al.
8,970,507	B2	3/2015	Holbein et al.
8,973,803	B2	3/2015	Hall et al.
8,973,804	B2	3/2015	Hess et al.
8,978,954	B2	3/2015	Shelton, IV et al.
8,978,955	B2	3/2015	Aronhalt et al.
8,978,956	B2	3/2015	Schall et al.
8,979,890	B2	3/2015	Boudreaux
8,982,195	B2	3/2015	Claus et al.
8,991,676	B2	3/2015	Hess et al.
8,991,677	B2	3/2015	Moore et al.
8,992,422	B2	3/2015	Spivey et al.
8,992,565	B2	3/2015	Brisson et al.
8,996,165	B2	3/2015	Wang et al.
8,998,058	B2	4/2015	Moore et al.
9,005,230	B2	4/2015	Yates et al.
9,011,471	B2	4/2015	Timm et al.
9,016,540	B2	4/2015	Whitman et al.
9,016,542	B2	4/2015	Shelton, IV et al.
9,017,331	B2	4/2015	Fox
9,017,371	B2	4/2015	Whitman et al.
9,023,014	B2	5/2015	Chowaniec et al.
9,027,817	B2	5/2015	Milliman et al.
9,028,494	B2	5/2015	Shelton, IV et al.
9,028,495	B2	5/2015	Mueller et al.
9,028,519	B2	5/2015	Yates et al.
9,033,203	B2	5/2015	Woodard, Jr. et al.
9,033,204	B2	5/2015	Shelton, IV et al.
9,038,881	B1	5/2015	Schaller et al.
9,039,690	B2	5/2015	Kersten et al.
9,039,720	B2	5/2015	Madan
9,043,027	B2	5/2015	Durant et al.
9,044,227	B2	6/2015	Shelton, IV et al.
9,044,228	B2	6/2015	Woodard, Jr. et al.
9,044,230	B2	6/2015	Morgan et al.
9,050,083	B2	6/2015	Yates et al.
9,050,084	B2	6/2015	Schmid et al.
9,050,100	B2	6/2015	Yates et al.
9,055,941	B2	6/2015	Schmid et al.
9,055,944	B2	6/2015	Hodgkinson et al.
9,055,961	B2	6/2015	Manzo et al.
9,060,770	B2	6/2015	Shelton, IV et al.
9,072,515	B2	7/2015	Hall et al.
9,072,535	B2	7/2015	Shelton, IV et al.
9,072,536	B2	7/2015	Shelton, IV et al.
9,078,653	B2	7/2015	Leimbach et al.
9,084,601	B2	7/2015	Moore et al.
9,084,602	B2	7/2015	Gleiman
9,086,875	B2	7/2015	Harrat et al.
9,089,330	B2	7/2015	Widenhouse et al.
9,095,339	B2	8/2015	Moore et al.
9,095,362	B2	8/2015	Dachs, II et al.
9,096,033	B2	8/2015	Holop et al.
9,099,863	B2	8/2015	Smith et al.
9,101,358	B2	8/2015	Kerr et al.
9,101,385	B2	8/2015	Shelton, IV et al.
9,107,663	B2	8/2015	Swensgard
9,113,862	B2	8/2015	Morgan et al.
9,113,864	B2	8/2015	Morgan et al.
9,113,865	B2	8/2015	Shelton, IV et al.
9,113,873	B2	8/2015	Marczyk et al.
9,113,874	B2	8/2015	Shelton, IV et al.
9,113,880	B2	8/2015	Zemlok et al.
9,113,883	B2	8/2015	Aronhalt et al.
9,113,884	B2	8/2015	Shelton, IV et al.
9,119,657	B2	9/2015	Shelton, IV et al.
9,123,286	B2	9/2015	Park
9,125,654	B2	9/2015	Aronhalt et al.
9,125,662	B2	9/2015	Shelton, IV
9,131,940	B2	9/2015	Huitema et al.
9,131,957	B2	9/2015	Skarbnik et al.
9,138,225	B2	9/2015	Huang et al.
9,149,274	B2	10/2015	Spivey et al.
9,149,325	B2	10/2015	Worrell et al.
9,161,803	B2	10/2015	Yates et al.

(56) **References Cited**

U.S. PATENT DOCUMENTS

9,168,038	B2	10/2015	Shelton, IV et al.
9,168,054	B2	10/2015	Turner et al.
9,168,144	B2	10/2015	Rivin et al.
9,179,911	B2	11/2015	Morgan et al.
9,179,912	B2	11/2015	Yates et al.
9,186,143	B2	11/2015	Timm et al.
9,186,148	B2	11/2015	Felder et al.
9,192,380	B2	11/2015	(Tarinelli) Racenet et al.
9,192,384	B2	11/2015	Bettuchi
9,193,045	B2	11/2015	Saur et al.
9,198,661	B2	12/2015	Swensgard
9,198,662	B2	12/2015	Barton et al.
9,204,877	B2	12/2015	Whitman et al.
9,204,878	B2	12/2015	Hall et al.
9,204,879	B2	12/2015	Shelton, IV
9,204,880	B2	12/2015	Baxter, III et al.
9,211,120	B2	12/2015	Scheib et al.
9,211,121	B2	12/2015	Hall et al.
9,211,122	B2	12/2015	Hagerty et al.
9,216,019	B2	12/2015	Schmid et al.
9,220,500	B2	12/2015	Swayze et al.
9,220,501	B2	12/2015	Baxter, III et al.
9,226,750	B2	1/2016	Weir et al.
9,226,751	B2	1/2016	Shelton, IV et al.
9,232,941	B2	1/2016	Mandakolathur Vasudevan et al.
9,232,945	B2	1/2016	Zingman
9,232,979	B2	1/2016	Parihar et al.
9,237,891	B2	1/2016	Shelton, IV
9,241,714	B2	1/2016	Timm et al.
9,259,274	B2	2/2016	Prisco
9,271,799	B2	3/2016	Shelton, IV et al.
9,272,406	B2	3/2016	Aronhalt et al.
9,277,919	B2	3/2016	Timmer et al.
9,277,922	B2	3/2016	Carter et al.
9,282,962	B2	3/2016	Schmid et al.
9,282,966	B2	3/2016	Shelton, IV et al.
9,282,974	B2	3/2016	Shelton, IV
9,283,054	B2	3/2016	Morgan et al.
9,289,206	B2	3/2016	Hess et al.
9,289,207	B2	3/2016	Shelton, IV
9,289,210	B2	3/2016	Baxter, III et al.
9,289,212	B2	3/2016	Shelton, IV et al.
9,289,225	B2	3/2016	Shelton, IV et al.
9,289,256	B2	3/2016	Shelton, IV et al.
9,295,464	B2	3/2016	Shelton, IV et al.
9,301,752	B2	4/2016	Mandakolathur Vasudevan et al.
9,301,753	B2	4/2016	Aldridge et al.
9,301,755	B2	4/2016	Shelton, IV et al.
9,301,759	B2	4/2016	Spivey et al.
9,307,986	B2	4/2016	Hall et al.
9,307,988	B2	4/2016	Shelton, IV
9,308,011	B2	4/2016	Chao et al.
9,314,246	B2	4/2016	Shelton, IV et al.
9,320,518	B2	4/2016	Henderson et al.
9,320,520	B2	4/2016	Shelton, IV et al.
9,320,521	B2	4/2016	Shelton, IV et al.
9,320,523	B2	4/2016	Shelton, IV et al.
9,326,767	B2	5/2016	Koch, Jr. et al.
9,326,768	B2	5/2016	Shelton, IV
9,326,769	B2	5/2016	Shelton, IV et al.
9,326,770	B2	5/2016	Shelton, IV et al.
9,326,771	B2	5/2016	Baxter, III et al.
9,332,974	B2	5/2016	Henderson et al.
9,332,984	B2	5/2016	Weaner et al.
9,332,987	B2	5/2016	Leimbach et al.
9,345,481	B2	5/2016	Hall et al.
9,351,726	B2	5/2016	Leimbach et al.
9,351,727	B2	5/2016	Leimbach et al.
9,351,730	B2	5/2016	Schmid et al.
9,358,003	B2	6/2016	Hall et al.
9,358,005	B2	6/2016	Shelton, IV et al.
9,364,220	B2	6/2016	Williams
9,364,230	B2	6/2016	Shelton, IV et al.
9,364,233	B2	6/2016	Alexander, III et al.
9,364,279	B2	6/2016	Houser et al.
9,370,358	B2	6/2016	Shelton, IV et al.
9,370,364	B2	6/2016	Smith et al.
9,386,983	B2	7/2016	Swensgard et al.
9,386,984	B2 *	7/2016	Aronhalt A61B 17/07207
9,386,988	B2	7/2016	Baxter, III et al.
9,393,015	B2	7/2016	Laurent et al.
9,398,911	B2	7/2016	Auld
9,402,626	B2	8/2016	Ortiz et al.
9,408,604	B2	8/2016	Shelton, IV et al.
9,408,606	B2	8/2016	Shelton, IV
9,414,838	B2	8/2016	Shelton, IV et al.
9,433,419	B2	9/2016	Gonzalez et al.
9,445,813	B2	9/2016	Shelton, IV et al.
9,451,958	B2	9/2016	Shelton, IV et al.
9,480,476	B2	11/2016	Aldridge et al.
9,693,777	B2 *	7/2017	Schellin A61B 17/07292
2001/0025183	A1	9/2001	Shahidi
2001/0044637	A1	11/2001	Jacobs et al.
2002/0014510	A1	2/2002	Richter et al.
2002/0022836	A1	2/2002	Goble et al.
2002/0026126	A1	2/2002	Burdorff et al.
2002/0029032	A1	3/2002	Arkin
2002/0029036	A1	3/2002	Goble et al.
2002/0049472	A1	4/2002	Coleman et al.
2002/0095175	A1	7/2002	Brock et al.
2002/0103494	A1	8/2002	Pacey
2002/0117534	A1	8/2002	Green et al.
2002/0127265	A1	9/2002	Bowman et al.
2002/0128552	A1	9/2002	Nowlin et al.
2002/0134811	A1	9/2002	Napier et al.
2002/0135474	A1	9/2002	Sylliassen
2002/0143340	A1	10/2002	Kaneko
2002/0157481	A1	10/2002	Kogiso et al.
2002/0165541	A1	11/2002	Whitman
2002/0188170	A1	12/2002	Santamore et al.
2002/0193808	A1	12/2002	Belef et al.
2003/0023316	A1	1/2003	Brown et al.
2003/0066858	A1	4/2003	Holgersson
2003/0078647	A1	4/2003	Vallana et al.
2003/0084983	A1	5/2003	Rangachari et al.
2003/0093103	A1	5/2003	Malackowski et al.
2003/0096158	A1	5/2003	Takano et al.
2003/0105478	A1	6/2003	Whitman et al.
2003/0130677	A1	7/2003	Whitman et al.
2003/0139741	A1	7/2003	Goble et al.
2003/0153908	A1	8/2003	Goble et al.
2003/0153968	A1	8/2003	Geis et al.
2003/0163085	A1	8/2003	Tanner et al.
2003/0181900	A1	9/2003	Long
2003/0195387	A1	10/2003	Kortenbach et al.
2003/0205029	A1	11/2003	Chapolini et al.
2003/0216732	A1	11/2003	Truckai et al.
2003/0220660	A1	11/2003	Kortenbach et al.
2003/0236505	A1	12/2003	Bonadio et al.
2003/0236573	A1 *	12/2003	Evans A61L 27/12 623/23.58
2004/0002726	A1	1/2004	Nunez et al.
2004/0006335	A1	1/2004	Garrison
2004/0006340	A1	1/2004	Latterell et al.
2004/0006372	A1	1/2004	Racenet et al.
2004/0006861	A1	1/2004	Haytayan
2004/0030333	A1	2/2004	Goble
2004/0032345	A1	2/2004	Kazuya et al.
2004/0034357	A1	2/2004	Beane et al.
2004/0034369	A1	2/2004	Sauer et al.
2004/0044364	A1	3/2004	DeVries et al.
2004/0068161	A1	4/2004	Couvillon, Jr.
2004/0068224	A1	4/2004	Couvillon, Jr. et al.
2004/0068307	A1	4/2004	Goble
2004/0070369	A1	4/2004	Sakakibara
2004/0073222	A1	4/2004	Koseki
2004/0078037	A1	4/2004	Batchelor et al.
2004/0093024	A1	5/2004	Lousararian et al.
2004/0094597	A1	5/2004	Whitman et al.
2004/0097987	A1	5/2004	Pugsley et al.
2004/0098040	A1	5/2004	Taniguchi et al.
2004/0101822	A1	5/2004	Wiesner et al.
2004/0102783	A1	5/2004	Sutterlin, III et al.
2004/0108357	A1	6/2004	Milliman et al.

(56) **References Cited**

U.S. PATENT DOCUMENTS

2004/0110439 A1 6/2004 Chaikof et al.
2004/0111081 A1 6/2004 Whitman et al.
2004/0115022 A1 6/2004 Albertson et al.
2004/0116952 A1 6/2004 Sakurai et al.
2004/0133095 A1 7/2004 Dunki-Jacobs et al.
2004/0143297 A1 7/2004 Ramsey
2004/0147909 A1 7/2004 Johnston et al.
2004/0164123 A1 8/2004 Racenet et al.
2004/0167572 A1 8/2004 Roth et al.
2004/0173659 A1 9/2004 Green et al.
2004/0181219 A1 9/2004 Goble et al.
2004/0186470 A1 9/2004 Goble et al.
2004/0193189 A1 9/2004 Kortenbach et al.
2004/0199181 A1 10/2004 Knodel et al.
2004/0222268 A1 11/2004 Bilotti et al.
2004/0225186 A1 11/2004 Horne, Jr. et al.
2004/0230214 A1 11/2004 Donofrio et al.
2004/0232201 A1 11/2004 Wenchell et al.
2004/0236352 A1 11/2004 Wang et al.
2004/0243147 A1 12/2004 Lipow
2004/0243151 A1 12/2004 Demmy et al.
2004/0243163 A1 12/2004 Casiano et al.
2004/0243176 A1 12/2004 Hahnen et al.
2004/0247415 A1 12/2004 Mangone, Jr.
2004/0254455 A1 12/2004 Iddan
2004/0254566 A1 12/2004 Plicchi et al.
2004/0254590 A1 12/2004 Hoffman et al.
2004/0254608 A1 12/2004 Huitema et al.
2004/0260315 A1 12/2004 Dell et al.
2004/0267297 A1 12/2004 Malackowski
2004/0267310 A1 12/2004 Racenet et al.
2005/0010158 A1 1/2005 Brugger et al.
2005/0010213 A1 1/2005 Stad et al.
2005/0032511 A1 2/2005 Malone et al.
2005/0033352 A1 2/2005 Zepf et al.
2005/0033357 A1 2/2005 Braun
2005/0048121 A1* 3/2005 East A61K 9/0024
424/486
2005/0054946 A1 3/2005 Krzyzanowski
2005/0059997 A1 3/2005 Bauman et al.
2005/0070929 A1 3/2005 Dalessandro et al.
2005/0075561 A1 4/2005 Golden
2005/0080454 A1 4/2005 Drews et al.
2005/0085693 A1 4/2005 Belson et al.
2005/0090817 A1 4/2005 Phan
2005/0096683 A1 5/2005 Ellins et al.
2005/0103819 A1 5/2005 Racenet et al.
2005/0107814 A1 5/2005 Johnston et al.
2005/0107824 A1 5/2005 Hillstead et al.
2005/0113820 A1 5/2005 Goble et al.
2005/0116673 A1 6/2005 Carl et al.
2005/0119525 A1 6/2005 Takemoto
2005/0119669 A1 6/2005 Demmy
2005/0124855 A1 6/2005 Jaffe et al.
2005/0125009 A1 6/2005 Perry et al.
2005/0125897 A1 6/2005 Wyslucha et al.
2005/0131173 A1 6/2005 McDaniel et al.
2005/0131211 A1 6/2005 Bayley et al.
2005/0131390 A1 6/2005 Heinrich et al.
2005/0131436 A1 6/2005 Johnston et al.
2005/0131437 A1 6/2005 Johnston et al.
2005/0131457 A1 6/2005 Douglas et al.
2005/0137454 A1 6/2005 Saadat et al.
2005/0137455 A1 6/2005 Ewers et al.
2005/0143759 A1 6/2005 Kelly
2005/0143769 A1 6/2005 White et al.
2005/0145675 A1 7/2005 Hartwick et al.
2005/0150928 A1 7/2005 Kameyama et al.
2005/0154258 A1 7/2005 Tartaglia et al.
2005/0154406 A1 7/2005 Bombard et al.
2005/0159184 A1 7/2005 Kerner et al.
2005/0165419 A1 7/2005 Sauer et al.
2005/0165435 A1 7/2005 Johnston et al.
2005/0169974 A1 8/2005 Tenerz et al.
2005/0171522 A1 8/2005 Christopherson
2005/0177181 A1 8/2005 Kagan et al.
2005/0182298 A1 8/2005 Ikeda et al.
2005/0187545 A1 8/2005 Hooven et al.
2005/0187572 A1 8/2005 Johnston et al.
2005/0187576 A1 8/2005 Whitman et al.
2005/0189397 A1 9/2005 Jankowski
2005/0192609 A1 9/2005 Whitman et al.
2005/0192628 A1 9/2005 Viola
2005/0203550 A1 9/2005 Laufer et al.
2005/0216055 A1 9/2005 Scirica et al.
2005/0228224 A1 10/2005 Okada et al.
2005/0240178 A1 10/2005 Morley et al.
2005/0240222 A1 10/2005 Shipp
2005/0245965 A1 11/2005 Orban, III et al.
2005/0251128 A1 11/2005 Amoah
2005/0256452 A1 11/2005 DeMarchi et al.
2005/0256522 A1 11/2005 Francischelli et al.
2005/0261676 A1 11/2005 Hall et al.
2005/0261677 A1 11/2005 Hall et al.
2005/0263563 A1 12/2005 Racenet et al.
2005/0267455 A1 12/2005 Eggers et al.
2005/0267530 A1 12/2005 Cummins
2005/0272973 A1 12/2005 Kawano et al.
2005/0274768 A1 12/2005 Cummins et al.
2005/0283188 A1 12/2005 Loshakove et al.
2005/0283255 A1* 12/2005 Geremakis A61F 2/4644
623/23.51
2006/0004407 A1 1/2006 Hiles et al.
2006/0008787 A1 1/2006 Hayman et al.
2006/0011699 A1 1/2006 Olson et al.
2006/0015009 A1 1/2006 Jaffe et al.
2006/0020247 A1 1/2006 Kagan et al.
2006/0020258 A1 1/2006 Strauss et al.
2006/0020336 A1 1/2006 Liddicoat
2006/0025811 A1 2/2006 Shelton, IV
2006/0025812 A1 2/2006 Shelton, IV
2006/0041188 A1 2/2006 Dirusso et al.
2006/0047275 A1 3/2006 Goble
2006/0047303 A1 3/2006 Ortiz et al.
2006/0047307 A1 3/2006 Ortiz et al.
2006/0049229 A1 3/2006 Milliman et al.
2006/0052825 A1 3/2006 Ransick et al.
2006/0060630 A1 3/2006 Shelton, IV et al.
2006/0064086 A1 3/2006 Odom
2006/0079115 A1 4/2006 Aranyi et al.
2006/0079735 A1 4/2006 Martone et al.
2006/0085031 A1 4/2006 Bettuchi
2006/0085033 A1 4/2006 Criscuolo et al.
2006/0086032 A1 4/2006 Valencic et al.
2006/0087746 A1 4/2006 Lipow
2006/0089535 A1 4/2006 Raz et al.
2006/0100643 A1 5/2006 Laufer et al.
2006/0100649 A1 5/2006 Hart
2006/0108393 A1 5/2006 Heinrich et al.
2006/0111711 A1 5/2006 Goble
2006/0111723 A1 5/2006 Chapolini et al.
2006/0116634 A1 6/2006 Shachar
2006/0122636 A1 6/2006 Bailly et al.
2006/0142772 A1 6/2006 Ralph et al.
2006/0149163 A1 7/2006 Hibner et al.
2006/0161185 A1 7/2006 Saadat et al.
2006/0167471 A1 7/2006 Phillips
2006/0173470 A1 8/2006 Oray et al.
2006/0178556 A1 8/2006 Hasser et al.
2006/0180634 A1 8/2006 Shelton, IV et al.
2006/0185682 A1 8/2006 Marczyk
2006/0200123 A1 9/2006 Ryan
2006/0201989 A1 9/2006 Ojeda
2006/0206100 A1 9/2006 Eskridge et al.
2006/0212069 A1 9/2006 Shelton, IV
2006/0217729 A1 9/2006 Eskridge et al.
2006/0226196 A1 10/2006 Hueil et al.
2006/0235368 A1 10/2006 Oz
2006/0235469 A1 10/2006 Viola
2006/0241655 A1 10/2006 Viola
2006/0241692 A1 10/2006 McGuckin, Jr. et al.
2006/0244460 A1 11/2006 Weaver
2006/0252993 A1 11/2006 Freed et al.
2006/0253069 A1 11/2006 Li et al.

(56) **References Cited**

U.S. PATENT DOCUMENTS

2006/0258904 A1 11/2006 Stefanchik et al.
2006/0258910 A1 11/2006 Stefanchik et al.
2006/0259073 A1 11/2006 Miyamoto et al.
2006/0264927 A1 11/2006 Ryan
2006/0264929 A1 11/2006 Goble et al.
2006/0271042 A1 11/2006 Latterell et al.
2006/0271102 A1 11/2006 Bosshard et al.
2006/0278680 A1 12/2006 Viola et al.
2006/0278681 A1 12/2006 Viola et al.
2006/0282064 A1 12/2006 Shimizu et al.
2006/0284730 A1 12/2006 Schmid et al.
2006/0287576 A1 12/2006 Tsuji et al.
2006/0289602 A1 12/2006 Wales et al.
2006/0291981 A1 12/2006 Viola et al.
2007/0010702 A1 1/2007 Wang et al.
2007/0010838 A1 1/2007 Shelton, IV et al.
2007/0023476 A1 2/2007 Whitman et al.
2007/0023477 A1 2/2007 Whitman et al.
2007/0026039 A1 2/2007 Drumheller et al.
2007/0026040 A1 2/2007 Crawley et al.
2007/0027468 A1 2/2007 Wales et al.
2007/0027472 A1 2/2007 Hiles et al.
2007/0027551 A1 2/2007 Farnsworth et al.
2007/0027553 A1* 2/2007 Biran A61L 31/146 623/23.74
2007/0034668 A1 2/2007 Holsten et al.
2007/0049951 A1 3/2007 Menn
2007/0049966 A1 3/2007 Bonadio et al.
2007/0051375 A1 3/2007 Milliman
2007/0055219 A1 3/2007 Whitman et al.
2007/0066981 A1 3/2007 Meagher
2007/0070574 A1 3/2007 Nerheim et al.
2007/0073341 A1 3/2007 Smith et al.
2007/0078328 A1 4/2007 Ozaki et al.
2007/0078484 A1 4/2007 Talarico et al.
2007/0083193 A1 4/2007 Werneth et al.
2007/0084897 A1 4/2007 Shelton, IV et al.
2007/0090788 A1 4/2007 Hansford et al.
2007/0093869 A1 4/2007 Bloom et al.
2007/0102472 A1 5/2007 Shelton, IV
2007/0106113 A1 5/2007 Ravo
2007/0106317 A1 5/2007 Shelton, IV et al.
2007/0118175 A1 5/2007 Butler et al.
2007/0129605 A1 6/2007 Schaaf
2007/0135686 A1 6/2007 Pruitt, Jr. et al.
2007/0135803 A1 6/2007 Belson
2007/0155010 A1 7/2007 Farnsworth et al.
2007/0158358 A1 7/2007 Mason, II et al.
2007/0170225 A1 7/2007 Shelton, IV et al.
2007/0173687 A1 7/2007 Shima et al.
2007/0173806 A1 7/2007 Orszulak et al.
2007/0173813 A1 7/2007 Odom
2007/0175950 A1 8/2007 Shelton, IV et al.
2007/0175951 A1 8/2007 Shelton, IV et al.
2007/0175955 A1 8/2007 Shelton, IV et al.
2007/0179528 A1 8/2007 Soltz et al.
2007/0181632 A1 8/2007 Milliman
2007/0190110 A1 8/2007 Pameijer et al.
2007/0191868 A1 8/2007 Theroux et al.
2007/0194079 A1 8/2007 Hueil et al.
2007/0194082 A1 8/2007 Morgan et al.
2007/0198039 A1 8/2007 Jones et al.
2007/0203510 A1 8/2007 Bettuchi
2007/0213750 A1 9/2007 Weadock
2007/0219571 A1 9/2007 Balbierz et al.
2007/0225562 A1 9/2007 Spivey et al.
2007/0233163 A1 10/2007 Bombard et al.
2007/0239028 A1 10/2007 Houser et al.
2007/0243227 A1 10/2007 Gertner
2007/0244471 A1 10/2007 Malackowski
2007/0246505 A1 10/2007 Pace-Floridia et al.
2007/0249999 A1 10/2007 Sklar et al.
2007/0250113 A1 10/2007 Hegeman et al.
2007/0260278 A1 11/2007 Wheeler et al.
2007/0270784 A1 11/2007 Smith et al.
2007/0270884 A1 11/2007 Smith et al.
2007/0275035 A1 11/2007 Herman et al.
2007/0276409 A1 11/2007 Ortiz et al.
2007/0279011 A1 12/2007 Jones et al.
2007/0286892 A1 12/2007 Herzberg et al.
2007/0287993 A1 12/2007 Hinman et al.
2007/0288044 A1 12/2007 Jinno et al.
2007/0299427 A1 12/2007 Yeung et al.
2008/0003196 A1 1/2008 Jonn et al.
2008/0015598 A1 1/2008 Prommersberger
2008/0029570 A1 2/2008 Shelton et al.
2008/0029573 A1 2/2008 Shelton et al.
2008/0029574 A1 2/2008 Shelton et al.
2008/0029575 A1 2/2008 Shelton et al.
2008/0030170 A1 2/2008 Dacquay et al.
2008/0035701 A1 2/2008 Racenet et al.
2008/0041916 A1 2/2008 Milliman et al.
2008/0041917 A1 2/2008 Racenet et al.
2008/0051833 A1 2/2008 Gramuglia et al.
2008/0065153 A1 3/2008 Allard et al.
2008/0071328 A1 3/2008 Haubrich et al.
2008/0078802 A1 4/2008 Hess et al.
2008/0082114 A1 4/2008 McKenna et al.
2008/0082125 A1 4/2008 Murray et al.
2008/0082126 A1 4/2008 Murray et al.
2008/0083808 A1 4/2008 Scirica
2008/0083813 A1 4/2008 Zemlok et al.
2008/0085296 A1 4/2008 Powell et al.
2008/0086078 A1 4/2008 Powell et al.
2008/0091072 A1 4/2008 Omori et al.
2008/0097563 A1 4/2008 Petrie et al.
2008/0108443 A1 5/2008 Jinno et al.
2008/0114250 A1 5/2008 Urbano et al.
2008/0114315 A1 5/2008 Voegele et al.
2008/0114385 A1 5/2008 Byrum et al.
2008/0128469 A1 6/2008 Dalessandro et al.
2008/0129253 A1 6/2008 Shiue et al.
2008/0140115 A1 6/2008 Stopek
2008/0154299 A1 6/2008 Livneh
2008/0169328 A1 7/2008 Shelton
2008/0169332 A1 7/2008 Shelton et al.
2008/0169333 A1 7/2008 Shelton et al.
2008/0172087 A1 7/2008 Fuchs et al.
2008/0172088 A1 7/2008 Smith et al.
2008/0183193 A1 7/2008 Omori et al.
2008/0185419 A1 8/2008 Smith et al.
2008/0190989 A1 8/2008 Crews et al.
2008/0197167 A1 8/2008 Viola et al.
2008/0200762 A1 8/2008 Stokes et al.
2008/0200835 A1 8/2008 Monson et al.
2008/0200933 A1 8/2008 Bakos et al.
2008/0200949 A1 8/2008 Hiles et al.
2008/0228029 A1 9/2008 Mikkaichi et al.
2008/0241667 A1 10/2008 Kohn et al.
2008/0245841 A1 10/2008 Smith et al.
2008/0249608 A1* 10/2008 Dave A61F 2/91 623/1.16
2008/0251568 A1 10/2008 Zemlok et al.
2008/0251569 A1 10/2008 Smith et al.
2008/0255413 A1 10/2008 Zemlok et al.
2008/0255607 A1 10/2008 Zemlok
2008/0262654 A1 10/2008 Omori et al.
2008/0281171 A1 11/2008 Fennell et al.
2008/0281254 A1 11/2008 Humayun et al.
2008/0283570 A1 11/2008 Boyden et al.
2008/0287944 A1 11/2008 Pearson et al.
2008/0287988 A1 11/2008 Smith et al.
2008/0290134 A1 11/2008 Bettuchi et al.
2008/0294179 A1 11/2008 Balbierz et al.
2008/0296346 A1 12/2008 Shelton, IV et al.
2008/0297287 A1 12/2008 Shachar et al.
2008/0308602 A1 12/2008 Timm et al.
2008/0308603 A1 12/2008 Shelton, IV et al.
2008/0308608 A1 12/2008 Prommersberger
2008/0314960 A1 12/2008 Marczyk et al.
2008/0315829 A1 12/2008 Jones et al.
2009/0001121 A1 1/2009 Hess et al.
2009/0001130 A1 1/2009 Hess et al.
2009/0004455 A1 1/2009 Gravagna et al.

(56) **References Cited**

U.S. PATENT DOCUMENTS

2009/0005809 A1 1/2009 Hess et al.
2009/0012534 A1 1/2009 Madhani et al.
2009/0015195 A1 1/2009 Loth-Krausser
2009/0018553 A1 1/2009 McLean et al.
2009/0020958 A1 1/2009 Soul
2009/0047329 A1 2/2009 Stucky et al.
2009/0048589 A1 2/2009 Takashino et al.
2009/0048612 A1 2/2009 Farritor et al.
2009/0054908 A1 2/2009 Zand et al.
2009/0069842 A1 3/2009 Lee et al.
2009/0076506 A1 3/2009 Baker
2009/0078736 A1 3/2009 Van Lue
2009/0082789 A1 3/2009 Milliman et al.
2009/0088659 A1 4/2009 Graham et al.
2009/0088774 A1 4/2009 Swarup et al.
2009/0090763 A1 4/2009 Zemlok et al.
2009/0092651 A1 4/2009 Shah et al.
2009/0093728 A1 4/2009 Hyde et al.
2009/0099579 A1 4/2009 Nentwick et al.
2009/0099876 A1 4/2009 Whitman
2009/0108048 A1 4/2009 Zemlok et al.
2009/0112229 A1 4/2009 Omori et al.
2009/0114701 A1 5/2009 Zemlok et al.
2009/0119011 A1 5/2009 Kondo et al.
2009/0137952 A1 5/2009 Ramamurthy et al.
2009/0143805 A1 6/2009 Palmer et al.
2009/0143855 A1 6/2009 Weber et al.
2009/0149871 A9 6/2009 Kagan et al.
2009/0157067 A1 6/2009 Kane et al.
2009/0157087 A1 6/2009 Wei et al.
2009/0171147 A1 7/2009 Lee et al.
2009/0177226 A1 7/2009 Reinprecht et al.
2009/0179757 A1 7/2009 Cohn et al.
2009/0188964 A1 7/2009 Orlov
2009/0198272 A1 8/2009 Kerver et al.
2009/0204108 A1 8/2009 Steffen
2009/0204109 A1 8/2009 Grove et al.
2009/0206125 A1 8/2009 Huitema et al.
2009/0206126 A1 8/2009 Huitema et al.
2009/0206131 A1 8/2009 Weisenburgh, II et al.
2009/0206133 A1 8/2009 Morgan et al.
2009/0206137 A1 8/2009 Hall et al.
2009/0206139 A1 8/2009 Hall et al.
2009/0206141 A1 8/2009 Huitema et al.
2009/0206142 A1 8/2009 Huitema et al.
2009/0213685 A1 8/2009 Mak et al.
2009/0234273 A1 9/2009 Intoccia et al.
2009/0242610 A1 10/2009 Shelton, Iv et al.
2009/0247368 A1 10/2009 Chiang
2009/0247901 A1 10/2009 Zimmer
2009/0248007 A1 10/2009 Falkenstein et al.
2009/0248038 A1 10/2009 Blumenkranz et al.
2009/0253959 A1 10/2009 Yoshie et al.
2009/0255974 A1 10/2009 Viola
2009/0255975 A1 10/2009 Zemlok et al.
2009/0255976 A1 10/2009 Marczyk et al.
2009/0255977 A1 10/2009 Zemlok
2009/0255978 A1 10/2009 Viola et al.
2009/0262078 A1 10/2009 Pizzi
2009/0270895 A1 10/2009 Churchill et al.
2009/0277949 A1 11/2009 Viola et al.
2009/0287300 A1* 11/2009 Dave A61L 31/06 623/1.42
2009/0290016 A1 11/2009 Suda
2009/0292283 A1 11/2009 Odom
2009/0308907 A1 12/2009 Nalagatla et al.
2010/0010511 A1 1/2010 Harris et al.
2010/0012704 A1 1/2010 Tarinelli Racenet et al.
2010/0016852 A1 1/2010 Manzo et al.
2010/0016888 A1 1/2010 Calabrese et al.
2010/0023024 A1 1/2010 Zeiner et al.
2010/0036370 A1 2/2010 Mirel et al.
2010/0041945 A1 2/2010 Isbell, Jr.
2010/0049084 A1 2/2010 Nock et al.
2010/0057087 A1 3/2010 Cha
2010/0057107 A1 3/2010 Sorrentino et al.
2010/0069942 A1 3/2010 Shelton, IV
2010/0072254 A1 3/2010 Aranyi et al.
2010/0076483 A1 3/2010 Imuta
2010/0076489 A1 3/2010 Stopek et al.
2010/0081883 A1 4/2010 Murray et al.
2010/0087840 A1* 4/2010 Ebersole A61B 17/07207 606/151
2010/0094289 A1 4/2010 Taylor et al.
2010/0096431 A1 4/2010 Smith et al.
2010/0100124 A1 4/2010 Calabrese et al.
2010/0108740 A1 5/2010 Pastorelli et al.
2010/0108741 A1 5/2010 Hessler et al.
2010/0122339 A1 5/2010 Boccacci
2010/0133317 A1 6/2010 Shelton, IV et al.
2010/0145146 A1 6/2010 Melder
2010/0147921 A1 6/2010 Olson
2010/0147922 A1 6/2010 Olson
2010/0147923 A1 6/2010 D'Agostino et al.
2010/0163598 A1 7/2010 Belzer
2010/0179022 A1 7/2010 Shirokoshi
2010/0179540 A1 7/2010 Marczyk et al.
2010/0180711 A1 7/2010 Kilibarda et al.
2010/0186219 A1 7/2010 Smith
2010/0191292 A1 7/2010 DeMeo et al.
2010/0193566 A1 8/2010 Scheib et al.
2010/0200637 A1 8/2010 Beetel
2010/0204717 A1 8/2010 Knodel
2010/0222901 A1 9/2010 Swayze et al.
2010/0230465 A1 9/2010 Smith et al.
2010/0243707 A1 9/2010 Olson et al.
2010/0243708 A1 9/2010 Aranyi et al.
2010/0249497 A1 9/2010 Peine et al.
2010/0249519 A1 9/2010 Park et al.
2010/0249759 A1 9/2010 Hinman et al.
2010/0258611 A1 10/2010 Smith et al.
2010/0267662 A1 10/2010 Fielder et al.
2010/0268030 A1 10/2010 Viola et al.
2010/0274160 A1 10/2010 Yachi et al.
2010/0276471 A1 11/2010 Whitman
2010/0278891 A1* 11/2010 Ringeisen A61B 17/80 424/422
2010/0292540 A1 11/2010 Hess et al.
2010/0294827 A1 11/2010 Boyden et al.
2010/0298636 A1 11/2010 Castro et al.
2010/0312261 A1 12/2010 Suzuki et al.
2010/0320252 A1 12/2010 Viola et al.
2010/0331856 A1 12/2010 Carlson et al.
2010/0331880 A1 12/2010 Stopek
2011/0003528 A1 1/2011 Lam
2011/0006101 A1 1/2011 Hall et al.
2011/0009890 A1 1/2011 Palmer et al.
2011/0011916 A1 1/2011 Levine
2011/0016960 A1 1/2011 Debrailly
2011/0017799 A1 1/2011 Whitman et al.
2011/0021871 A1 1/2011 Berkelaar
2011/0022032 A1 1/2011 Zemlok et al.
2011/0024477 A1 2/2011 Hall et al.
2011/0024478 A1 2/2011 Shelton, IV
2011/0025311 A1 2/2011 Chauvin et al.
2011/0034910 A1 2/2011 Ross et al.
2011/0034918 A1 2/2011 Reschke
2011/0036887 A1 2/2011 Zemlok et al.
2011/0036890 A1 2/2011 Ma
2011/0036891 A1 2/2011 Zemlok et al.
2011/0045047 A1 2/2011 Bennett et al.
2011/0046666 A1 2/2011 Sorrentino et al.
2011/0046667 A1 2/2011 Culligan et al.
2011/0060356 A1 3/2011 Reschke et al.
2011/0060363 A1 3/2011 Hess et al.
2011/0082538 A1 4/2011 Dahlgren et al.
2011/0084112 A1 4/2011 Kostrzewski
2011/0087276 A1 4/2011 Bedi et al.
2011/0087279 A1 4/2011 Shah et al.
2011/0088921 A1 4/2011 Forgues et al.
2011/0095068 A1 4/2011 Patel
2011/0101065 A1 5/2011 Milliman
2011/0101069 A1 5/2011 Bombard et al.
2011/0112517 A1 5/2011 Peine et al.

(56) **References Cited**

U.S. PATENT DOCUMENTS

2011/0114697	A1	5/2011	Baxter, III et al.
2011/0118778	A1	5/2011	Burbank
2011/0121049	A1	5/2011	Malinouskas et al.
2011/0125138	A1	5/2011	Malinouskas et al.
2011/0125176	A1	5/2011	Yates et al.
2011/0144640	A1	6/2011	Heinrich et al.
2011/0147433	A1	6/2011	Shelton, IV et al.
2011/0155786	A1	6/2011	Shelton, IV
2011/0163146	A1	7/2011	Ortiz et al.
2011/0167619	A1	7/2011	Smith et al.
2011/0174099	A1	7/2011	Ross et al.
2011/0174861	A1	7/2011	Shelton, IV et al.
2011/0178536	A1	7/2011	Kostrzewski
2011/0184459	A1	7/2011	Malkowski et al.
2011/0192882	A1	8/2011	Hess et al.
2011/0199225	A1	8/2011	Touchberry et al.
2011/0208093	A1	8/2011	Gross et al.
2011/0210156	A1	9/2011	Smith et al.
2011/0218550	A1	9/2011	Ma
2011/0241597	A1	10/2011	Zhu et al.
2011/0253765	A1	10/2011	Nicholas et al.
2011/0257650	A1	10/2011	Deville et al.
2011/0264119	A1	10/2011	Bayon et al.
2011/0275901	A1	11/2011	Shelton, IV
2011/0276083	A1	11/2011	Shelton, IV et al.
2011/0278343	A1	11/2011	Knodel et al.
2011/0279268	A1	11/2011	Konishi et al.
2011/0282446	A1	11/2011	Schulte et al.
2011/0290851	A1	12/2011	Shelton, IV
2011/0290856	A1	12/2011	Shelton, IV et al.
2011/0293690	A1	12/2011	Griffin et al.
2011/0295295	A1	12/2011	Shelton, IV et al.
2011/0307023	A1	12/2011	Tweden et al.
2011/0313894	A1	12/2011	Dye et al.
2011/0315413	A1	12/2011	Fisher et al.
2012/0004636	A1	1/2012	Lo
2012/0016413	A1	1/2012	Timm et al.
2012/0018326	A1	1/2012	Racenet et al.
2012/0022523	A1	1/2012	Smith et al.
2012/0022630	A1	1/2012	Wübbeling
2012/0029272	A1	2/2012	Shelton, IV et al.
2012/0033360	A1	2/2012	Hsu
2012/0045303	A1	2/2012	Macdonald
2012/0046692	A1	2/2012	Smith et al.
2012/0064483	A1	3/2012	Lint et al.
2012/0074200	A1	3/2012	Schmid et al.
2012/0078071	A1	3/2012	Bohm et al.
2012/0078244	A1	3/2012	Worrell et al.
2012/0078278	A1	3/2012	Bales, Jr. et al.
2012/0080332	A1	4/2012	Shelton, IV et al.
2012/0080336	A1	4/2012	Shelton, IV et al.
2012/0080337	A1	4/2012	Shelton, IV et al.
2012/0080338	A1	4/2012	Shelton, IV et al.
2012/0080340	A1	4/2012	Shelton, IV et al.
2012/0080344	A1	4/2012	Shelton, IV
2012/0080475	A1	4/2012	Smith et al.
2012/0080478	A1	4/2012	Morgan et al.
2012/0080479	A1	4/2012	Shelton, IV
2012/0080481	A1	4/2012	Widenhouse et al.
2012/0080482	A1	4/2012	Schall et al.
2012/0080484	A1	4/2012	Morgan et al.
2012/0080485	A1	4/2012	Woodard, Jr. et al.
2012/0080486	A1	4/2012	Woodard, Jr. et al.
2012/0080488	A1	4/2012	Shelton, IV et al.
2012/0080489	A1	4/2012	Shelton, IV et al.
2012/0080491	A1	4/2012	Shelton, IV et al.
2012/0080493	A1	4/2012	Shelton, IV et al.
2012/0080498	A1	4/2012	Shelton, IV et al.
2012/0080499	A1	4/2012	Schall et al.
2012/0080500	A1	4/2012	Morgan et al.
2012/0080502	A1	4/2012	Morgan et al.
2012/0083835	A1	4/2012	Shelton, IV et al.
2012/0083836	A1	4/2012	Shelton, IV et al.
2012/0089131	A1	4/2012	Zemlok et al.
2012/0110810	A1	5/2012	Houser et al.
2012/0116265	A1	5/2012	Houser et al.
2012/0116367	A1	5/2012	Houser et al.
2012/0116388	A1	5/2012	Houser et al.
2012/0116391	A1	5/2012	Houser et al.
2012/0116395	A1	5/2012	Madan et al.
2012/0123203	A1	5/2012	Riva
2012/0125792	A1	5/2012	Cassivi
2012/0138658	A1	6/2012	Ullrich et al.
2012/0160721	A1	6/2012	Shelton, IV et al.
2012/0175398	A1	7/2012	Sandborn et al.
2012/0187179	A1	7/2012	Gleiman
2012/0209289	A1	8/2012	Duque et al.
2012/0223121	A1	9/2012	Viola et al.
2012/0228355	A1	9/2012	Combrowski et al.
2012/0234895	A1	9/2012	O'Connor et al.
2012/0234897	A1	9/2012	Shelton, IV et al.
2012/0234899	A1	9/2012	Scheib et al.
2012/0241491	A1	9/2012	Aldridge et al.
2012/0241492	A1	9/2012	Shelton, IV et al.
2012/0241493	A1	9/2012	Baxter, III et al.
2012/0241496	A1	9/2012	Mandakolathur Vasudevan et al.
2012/0241497	A1	9/2012	Mandakolathur Vasudevan et al.
2012/0241498	A1	9/2012	Gonzalez et al.
2012/0241499	A1	9/2012	Baxter, III et al.
2012/0241500	A1	9/2012	Timmer et al.
2012/0241501	A1	9/2012	Swayze et al.
2012/0241502	A1	9/2012	Aldridge et al.
2012/0241503	A1	9/2012	Baxter, III et al.
2012/0241505	A1	9/2012	Alexander, III et al.
2012/0248167	A1	10/2012	Flanagan et al.
2012/0248169	A1	10/2012	Widenhouse et al.
2012/0253298	A1	10/2012	Henderson et al.
2012/0253329	A1	10/2012	Zemlok et al.
2012/0265176	A1	10/2012	Braun
2012/0271285	A1	10/2012	Sholev et al.
2012/0273550	A1	11/2012	Scirica
2012/0277780	A1	11/2012	Smith et al.
2012/0283707	A1	11/2012	Giordano et al.
2012/0286021	A1	11/2012	Kostrzewski et al.
2012/0289979	A1	11/2012	Eskaros et al.
2012/0292367	A1	11/2012	Morgan et al.
2012/0296333	A1	11/2012	Twomey
2012/0298719	A1	11/2012	Shelton, IV et al.
2012/0298722	A1	11/2012	Hess et al.
2012/0310255	A1	12/2012	Brisson et al.
2012/0310256	A1	12/2012	Brisson
2012/0312860	A1	12/2012	Ming et al.
2012/0318842	A1	12/2012	Anim et al.
2012/0318844	A1*	12/2012	Shelton, IV A61B 17/00491 227/176.1
2012/0325892	A1	12/2012	Kostrzewski
2013/0012983	A1	1/2013	Kleyman
2013/0018361	A1	1/2013	Bryant
2013/0020375	A1	1/2013	Shelton, IV et al.
2013/0020376	A1	1/2013	Shelton, IV et al.
2013/0023861	A1	1/2013	Shelton, IV et al.
2013/0026208	A1	1/2013	Shelton, IV et al.
2013/0026210	A1	1/2013	Shelton, IV et al.
2013/0026973	A1	1/2013	Luke et al.
2013/0030608	A1	1/2013	Taylor et al.
2013/0032626	A1	2/2013	Smith et al.
2013/0037596	A1	2/2013	Bear et al.
2013/0046290	A1	2/2013	Palmer et al.
2013/0053851	A1*	2/2013	Schmitz A61B 10/0275 606/79
2013/0060278	A1	3/2013	Bozung et al.
2013/0062391	A1	3/2013	Boudreaux et al.
2013/0075446	A1	3/2013	Wang et al.
2013/0075448	A1	3/2013	Schmid et al.
2013/0075449	A1	3/2013	Schmid et al.
2013/0075450	A1	3/2013	Schmid et al.
2013/0079814	A1	3/2013	Hess et al.
2013/0087597	A1	4/2013	Shelton, IV et al.
2013/0087599	A1	4/2013	Krumanaker et al.
2013/0087602	A1	4/2013	Olson et al.
2013/0090534	A1	4/2013	Burns et al.
2013/0098970	A1	4/2013	Racenet et al.
2013/0103023	A1	4/2013	Monson et al.
2013/0103024	A1	4/2013	Monson et al.

(56) **References Cited**

U.S. PATENT DOCUMENTS

2013/0105548 A1 5/2013 Hodgkinson et al.
2013/0116668 A1 5/2013 Shelton, IV et al.
2013/0116669 A1 5/2013 Shelton, IV et al.
2013/0119108 A1 5/2013 Altman et al.
2013/0123822 A1 5/2013 Wellman et al.
2013/0126379 A1 5/2013 Medhal et al.
2013/0131651 A1 5/2013 Strobl et al.
2013/0146641 A1 6/2013 Shelton, IV et al.
2013/0146642 A1 6/2013 Shelton, IV et al.
2013/0146643 A1* 6/2013 Schmid A61B 17/0682 227/180.1
2013/0150832 A1 6/2013 Belson et al.
2013/0153633 A1 6/2013 Casasanta, Jr. et al.
2013/0153634 A1 6/2013 Carter et al.
2013/0153635 A1 6/2013 Hodgkinson
2013/0153636 A1 6/2013 Shelton, IV et al.
2013/0153638 A1 6/2013 Carter et al.
2013/0153641 A1 6/2013 Shelton, IV et al.
2013/0161374 A1 6/2013 Swayze et al.
2013/0168431 A1 7/2013 Zemlok et al.
2013/0172929 A1 7/2013 Hess et al.
2013/0175317 A1 7/2013 Yates et al.
2013/0175322 A1 7/2013 Yates et al.
2013/0186933 A1 7/2013 Shelton, IV et al.
2013/0186934 A1 7/2013 Shelton, IV et al.
2013/0190733 A1 7/2013 Giordano et al.
2013/0190757 A1 7/2013 Yates et al.
2013/0193188 A1 8/2013 Shelton, IV et al.
2013/0193189 A1 8/2013 Swensgard et al.
2013/0197556 A1 8/2013 Shelton, IV et al.
2013/0214025 A1 8/2013 Zemlok et al.
2013/0214030 A1* 8/2013 Aronhalt A61B 17/0682 227/176.1
2013/0221059 A1 8/2013 Racenet et al.
2013/0221063 A1 8/2013 Aronhalt et al.
2013/0221064 A1 8/2013 Aronhalt et al.
2013/0221065 A1 8/2013 Aronhalt et al.
2013/0233905 A1 9/2013 Sorrentino et al.
2013/0233906 A1 9/2013 Hess et al.
2013/0233908 A1 9/2013 Knodel et al.
2013/0238021 A1 9/2013 Gross et al.
2013/0256365 A1 10/2013 Shelton, IV et al.
2013/0256366 A1* 10/2013 Shelton, IV A61B 17/07207 227/175.1
2013/0256367 A1 10/2013 Scheib et al.
2013/0256368 A1 10/2013 Timm et al.
2013/0256369 A1 10/2013 Schmid et al.
2013/0256371 A1 10/2013 Shelton, IV
2013/0256372 A1 10/2013 Baxter, III et al.
2013/0256373 A1 10/2013 Schmid et al.
2013/0256374 A1 10/2013 Shelton, Iv et al.
2013/0256375 A1 10/2013 Shelton, Iv et al.
2013/0256377 A1 10/2013 Schmid et al.
2013/0256378 A1 10/2013 Schmid et al.
2013/0256379 A1 10/2013 Schmid et al.
2013/0256380 A1 10/2013 Schmid et al.
2013/0256382 A1 10/2013 Swayze et al.
2013/0256383 A1 10/2013 Aronhalt et al.
2013/0261648 A1 10/2013 Laurent et al.
2013/0267945 A1 10/2013 Behnke et al.
2013/0270322 A1 10/2013 Scheib et al.
2013/0277412 A1 10/2013 Gresham et al.
2013/0282052 A1 10/2013 Aranyi et al.
2013/0310873 A1 11/2013 Stopek (nee Prommersberger) et al.
2013/0313304 A1 11/2013 Shelton, IV et al.
2013/0313306 A1 11/2013 Shelton, IV et al.
2013/0319706 A1 12/2013 Nicholas et al.
2013/0324981 A1 12/2013 Smith et al.
2013/0324982 A1 12/2013 Smith et al.
2013/0327809 A1 12/2013 Shelton, IV et al.
2013/0327810 A1 12/2013 Swayze et al.
2013/0334283 A1 12/2013 Swayze et al.
2013/0334284 A1 12/2013 Swayze et al.
2013/0334285 A1 12/2013 Swayze et al.
2013/0334286 A1 12/2013 Swayze et al.
2013/0334287 A1 12/2013 Shelton, IV
2013/0334288 A1 12/2013 Shelton, IV
2013/0341374 A1 12/2013 Shelton, IV et al.
2014/0001231 A1 1/2014 Shelton, IV et al.
2014/0001234 A1 1/2014 Shelton, IV et al.
2014/0001237 A1 1/2014 Shelton, IV et al.
2014/0001238 A1 1/2014 Shelton, IV et al.
2014/0001239 A1 1/2014 Shelton, IV et al.
2014/0001240 A1 1/2014 Shelton, IV et al.
2014/0005640 A1 1/2014 Shelton, IV et al.
2014/0005678 A1 1/2014 Shelton, Iv et al.
2014/0005681 A1 1/2014 Gee et al.
2014/0005693 A1 1/2014 Shelton, IV et al.
2014/0005694 A1 1/2014 Shelton, IV et al.
2014/0005702 A1 1/2014 Timm et al.
2014/0005703 A1 1/2014 Stulen et al.
2014/0005718 A1 1/2014 Shelton, IV et al.
2014/0008414 A1 1/2014 Shelton, IV et al.
2014/0012237 A1 1/2014 Pribanic et al.
2014/0012238 A1 1/2014 Chen et al.
2014/0012289 A1 1/2014 Snow et al.
2014/0014705 A1 1/2014 Baxter, III
2014/0015782 A1 1/2014 Kim et al.
2014/0018832 A1 1/2014 Shelton, IV
2014/0025046 A1 1/2014 Williams et al.
2014/0042205 A1 2/2014 Baxter, III et al.
2014/0048580 A1 2/2014 Merchant et al.
2014/0061279 A1 3/2014 Laurent et al.
2014/0061280 A1 3/2014 Ingmanson et al.
2014/0097227 A1 4/2014 Aronhalt et al.
2014/0100558 A1 4/2014 Schmitz et al.
2014/0103093 A1 4/2014 Koch, Jr. et al.
2014/0107640 A1 4/2014 Yates et al.
2014/0110455 A1 4/2014 Ingmanson et al.
2014/0128850 A1 5/2014 Kerr et al.
2014/0138423 A1 5/2014 Whitfield et al.
2014/0151431 A1 6/2014 Hodgkinson et al.
2014/0151433 A1 6/2014 Shelton, IV et al.
2014/0166722 A1 6/2014 Hess et al.
2014/0166724 A1 6/2014 Schellin et al.
2014/0166725 A1 6/2014 Schellin et al.
2014/0166726 A1 6/2014 Schellin et al.
2014/0171966 A1 6/2014 Giordano et al.
2014/0175152 A1 6/2014 Hess et al.
2014/0175154 A1 6/2014 Shelton, IV et al.
2014/0191014 A1 7/2014 Shelton, IV
2014/0191015 A1 7/2014 Shelton, Iv
2014/0203061 A1 7/2014 Hodgkinson
2014/0205637 A1 7/2014 Widenhouse et al.
2014/0207125 A1 7/2014 Applegate et al.
2014/0207166 A1 7/2014 Shelton, IV et al.
2014/0224686 A1* 8/2014 Aronhalt A61B 17/068 206/339
2014/0224857 A1 8/2014 Schmid
2014/0230595 A1 8/2014 Butt et al.
2014/0232316 A1 8/2014 Philipp
2014/0236184 A1 8/2014 Leimbach et al.
2014/0239036 A1 8/2014 Zerkle et al.
2014/0239038 A1 8/2014 Leimbach et al.
2014/0243865 A1 8/2014 Swayze et al.
2014/0246471 A1 9/2014 Jaworek et al.
2014/0246472 A1 9/2014 Kimsey et al.
2014/0246475 A1 9/2014 Hall et al.
2014/0246478 A1 9/2014 Baber et al.
2014/0246479 A1 9/2014 Baber et al.
2014/0249557 A1 9/2014 Koch, Jr. et al.
2014/0252066 A1 9/2014 Shelton, IV et al.
2014/0252068 A1 9/2014 Shelton, IV et al.
2014/0259591 A1 9/2014 Shelton, IV et al.
2014/0263538 A1 9/2014 Leimbach et al.
2014/0263539 A1 9/2014 Leimbach et al.
2014/0263541 A1 9/2014 Leimbach et al.
2014/0263542 A1 9/2014 Leimbach et al.
2014/0263552 A1 9/2014 Hall et al.
2014/0263554 A1 9/2014 Leimbach et al.
2014/0263558 A1 9/2014 Hausen et al.
2014/0263562 A1 9/2014 Patel et al.
2014/0263564 A1 9/2014 Leimbach et al.

(56) **References Cited**

U.S. PATENT DOCUMENTS

2014/0263565	A1	9/2014	Lytle, IV et al.
2014/0263572	A1	9/2014	Shelton, IV et al.
2014/0277017	A1	9/2014	Leimbach et al.
2014/0284371	A1	9/2014	Morgan et al.
2014/0284373	A1	9/2014	Shelton, IV et al.
2014/0291378	A1	10/2014	Shelton, IV et al.
2014/0291379	A1	10/2014	Schellin et al.
2014/0291380	A1	10/2014	Weaner et al.
2014/0291382	A1	10/2014	Lloyd et al.
2014/0291383	A1	10/2014	Spivey et al.
2014/0296873	A1	10/2014	Morgan et al.
2014/0296874	A1	10/2014	Morgan et al.
2014/0299648	A1	10/2014	Shelton, Iv et al.
2014/0303645	A1	10/2014	Morgan et al.
2014/0303646	A1	10/2014	Morgan et al.
2014/0305987	A1	10/2014	Parihar et al.
2014/0305988	A1	10/2014	Boudreaux et al.
2014/0305989	A1	10/2014	Parihar et al.
2014/0305990	A1	10/2014	Shelton, IV et al.
2014/0305991	A1	10/2014	Parihar et al.
2014/0305992	A1	10/2014	Kimsey et al.
2014/0305994	A1	10/2014	Parihar et al.
2014/0309665	A1	10/2014	Parihar et al.
2014/0309666	A1	10/2014	Shelton, IV et al.
2014/0330161	A1	11/2014	Swayze et al.
2014/0339286	A1	11/2014	Motooka et al.
2014/0352463	A1	12/2014	Parihar
2014/0353358	A1	12/2014	Shelton, IV et al.
2014/0367447	A1	12/2014	Woodard, Jr. et al.
2014/0378950	A1	12/2014	Chiu
2015/0008248	A1	1/2015	Giordano et al.
2015/0034696	A1	2/2015	Shelton, IV et al.
2015/0038986	A1	2/2015	Swensgard et al.
2015/0041518	A1	2/2015	Shelton, IV et al.
2015/0053737	A1	2/2015	Leimbach et al.
2015/0053738	A1	2/2015	Morgan et al.
2015/0053739	A1	2/2015	Morgan et al.
2015/0053740	A1	2/2015	Shelton, IV
2015/0053741	A1	2/2015	Shelton, IV et al.
2015/0053742	A1	2/2015	Shelton, IV et al.
2015/0053743	A1	2/2015	Yates et al.
2015/0053744	A1	2/2015	Swayze et al.
2015/0053745	A1	2/2015	Yates et al.
2015/0053746	A1	2/2015	Shelton, IV et al.
2015/0053748	A1	2/2015	Yates et al.
2015/0060518	A1	3/2015	Shelton, IV et al.
2015/0060519	A1	3/2015	Shelton, IV et al.
2015/0060520	A1	3/2015	Shelton, IV et al.
2015/0060521	A1	3/2015	Weisenburgh, IV et al.
2015/0076207	A1	3/2015	Boudreaux et al.
2015/0076208	A1	3/2015	Shelton, IV
2015/0076209	A1	3/2015	Shelton, IV et al.
2015/0076210	A1	3/2015	Shelton, IV et al.
2015/0076212	A1	3/2015	Shelton, IV
2015/0080868	A1	3/2015	Kerr
2015/0083780	A1	3/2015	Shelton, IV et al.
2015/0083781	A1	3/2015	Giordano et al.
2015/0083782	A1	3/2015	Scheib et al.
2015/0083783	A1	3/2015	Shelton, IV et al.
2015/0090759	A1	4/2015	Spivey et al.
2015/0090760	A1	4/2015	Giordano et al.
2015/0090761	A1	4/2015	Giordano et al.
2015/0090762	A1	4/2015	Giordano et al.
2015/0090763	A1	4/2015	Murray et al.
2015/0108199	A1	4/2015	Shelton, IV et al.
2015/0122869	A1	5/2015	Aronhalt et al.
2015/0136830	A1	5/2015	Baxter, III et al.
2015/0136831	A1	5/2015	Baxter, III et al.
2015/0136832	A1	5/2015	Baxter, III et al.
2015/0136833	A1	5/2015	Shelton, IV et al.
2015/0136835	A1	5/2015	Shelton, IV et al.
2015/0157354	A1	6/2015	Bales, Jr. et al.
2015/0173744	A1	6/2015	Shelton, IV et al.
2015/0173745	A1	6/2015	Baxter, III et al.
2015/0173746	A1	6/2015	Baxter, III et al.
2015/0173747	A1	6/2015	Baxter, III et al.
2015/0173749	A1	6/2015	Shelton, IV et al.
2015/0173750	A1	6/2015	Shelton, IV et al.
2015/0173751	A1	6/2015	Shelton, IV et al.
2015/0173755	A1	6/2015	Baxter, III et al.
2015/0173756	A1	6/2015	Baxter, III et al.
2015/0173760	A1	6/2015	Shelton, IV et al.
2015/0173761	A1	6/2015	Shelton, IV et al.
2015/0173762	A1	6/2015	Shelton, IV et al.
2015/0173789	A1	6/2015	Baxter, III et al.
2015/0182220	A1	7/2015	Yates et al.
2015/0182222	A1	7/2015	Swayze et al.
2015/0196295	A1	7/2015	Shelton, IV et al.
2015/0196296	A1	7/2015	Swayze et al.
2015/0196299	A1	7/2015	Swayze et al.
2015/0196347	A1	7/2015	Yates et al.
2015/0196348	A1	7/2015	Yates et al.
2015/0201932	A1	7/2015	Swayze et al.
2015/0201935	A1	7/2015	Weisenburgh, II et al.
2015/0201936	A1	7/2015	Swayze et al.
2015/0201937	A1	7/2015	Swayze et al.
2015/0201938	A1	7/2015	Swayze et al.
2015/0201939	A1	7/2015	Swayze et al.
2015/0201940	A1	7/2015	Swayze et al.
2015/0201941	A1	7/2015	Swayze et al.
2015/0209031	A1	7/2015	Shelton, IV et al.
2015/0209038	A1	7/2015	Shelton, IV et al.
2015/0209039	A1	7/2015	Shelton, IV et al.
2015/0209041	A1	7/2015	Milliman et al.
2015/0223809	A1	8/2015	Scheib et al.
2015/0223816	A1	8/2015	Morgan et al.
2015/0230783	A1	8/2015	Shelton, IV et al.
2015/0230784	A1	8/2015	Shelton, IV et al.
2015/0231409	A1	8/2015	Racenet et al.
2015/0238185	A1	8/2015	Schellin et al.
2015/0238186	A1	8/2015	Aronhalt et al.
2015/0238187	A1	8/2015	Schellin et al.
2015/0238188	A1	8/2015	Vendely et al.
2015/0238191	A1	8/2015	Schellin et al.
2015/0239180	A1	8/2015	Schellin et al.
2015/0265276	A1	9/2015	Huitema et al.
2015/0265357	A1	9/2015	Shelton, IV et al.
2015/0272557	A1	10/2015	Overmyer et al.
2015/0272569	A1	10/2015	Leimbach et al.
2015/0272570	A1	10/2015	Lytle, IV et al.
2015/0272571	A1	10/2015	Leimbach et al.
2015/0272572	A1	10/2015	Overmyer et al.
2015/0272574	A1	10/2015	Leimbach et al.
2015/0272575	A1	10/2015	Leimbach et al.
2015/0272578	A1	10/2015	Leimbach et al.
2015/0272579	A1	10/2015	Leimbach et al.
2015/0272580	A1	10/2015	Leimbach et al.
2015/0272581	A1	10/2015	Leimbach et al.
2015/0272582	A1	10/2015	Leimbach et al.
2015/0272583	A1	10/2015	Leimbach et al.
2015/0277471	A1	10/2015	Leimbach et al.
2015/0280384	A1	10/2015	Leimbach et al.
2015/0280424	A1	10/2015	Leimbach et al.
2015/0282809	A1	10/2015	Shelton, IV et al.
2015/0282810	A1	10/2015	Shelton, IV et al.
2015/0289873	A1	10/2015	Shelton, IV et al.
2015/0289874	A1	10/2015	Leimbach et al.
2015/0297210	A1	10/2015	Widenhouse et al.
2015/0297217	A1	10/2015	Huitema et al.
2015/0297218	A1	10/2015	Shelton, IV et al.
2015/0297219	A1	10/2015	Shelton, IV et al.
2015/0297221	A1	10/2015	Kerr et al.
2015/0297222	A1	10/2015	Huitema et al.
2015/0297223	A1	10/2015	Huitema et al.
2015/0297224	A1	10/2015	Hall et al.
2015/0297225	A1	10/2015	Huitema et al.
2015/0297226	A1	10/2015	Hall et al.
2015/0297227	A1	10/2015	Huitema et al.
2015/0297228	A1	10/2015	Huitema et al.
2015/0297229	A1	10/2015	Schellin et al.
2015/0297230	A1	10/2015	Schellin et al.
2015/0297231	A1	10/2015	Huitema et al.
2015/0297232	A1	10/2015	Huitema et al.
2015/0297233	A1	10/2015	Huitema et al.

(56) **References Cited**

U.S. PATENT DOCUMENTS

2015/0297234 A1 10/2015 Schellin et al.
2015/0297235 A1 10/2015 Harris et al.
2015/0297236 A1 10/2015 Harris et al.
2015/0305744 A1 10/2015 Moore et al.
2015/0305745 A1 10/2015 Baxter, III et al.
2015/0313591 A1 11/2015 Baxter, III et al.
2015/0313594 A1 11/2015 Shelton, IV et al.
2015/0327853 A1 11/2015 Aronhalt et al.
2015/0327864 A1 11/2015 Hodgkinson et al.
2015/0335328 A1 11/2015 Shelton, IV et al.
2015/0335329 A1 11/2015 Shelton, IV et al.
2015/0342606 A1 12/2015 Schmid et al.
2015/0342607 A1 12/2015 Shelton, IV et al.
2015/0359536 A1 12/2015 Cropper et al.
2015/0374367 A1 12/2015 Hall et al.
2015/0374368 A1 12/2015 Swayze et al.
2015/0374369 A1 12/2015 Yates et al.
2015/0374374 A1 12/2015 Shelton, IV et al.
2015/0374375 A1 12/2015 Shelton, IV et al.
2015/0374376 A1 12/2015 Shelton, IV
2015/0374377 A1 12/2015 Shelton, IV
2015/0374378 A1 12/2015 Giordano et al.
2015/0374379 A1 12/2015 Shelton, IV
2016/0000430 A1 1/2016 Ming et al.
2016/0000431 A1 1/2016 Giordano et al.
2016/0000432 A1 1/2016 Huang et al.
2016/0000437 A1 1/2016 Giordano et al.
2016/0000438 A1 1/2016 Swayze et al.
2016/0000439 A1 1/2016 Weisenburgh, II et al.
2016/0000440 A1 1/2016 Weisenburgh, II et al.
2016/0000441 A1 1/2016 Shelton, IV et al.
2016/0000442 A1 1/2016 Shelton, IV
2016/0000452 A1 1/2016 Yates et al.
2016/0000453 A1 1/2016 Yates et al.
2016/0000513 A1 1/2016 Shelton, IV et al.
2016/0007992 A1 1/2016 Yates et al.
2016/0008023 A1 1/2016 Yates et al.
2016/0015390 A1 1/2016 Timm et al.
2016/0015391 A1 1/2016 Shelton, IV et al.
2016/0051257 A1 2/2016 Shelton, IV et al.
2016/0058443 A1 3/2016 Yates et al.
2016/0066909 A1 3/2016 Baber et al.
2016/0066910 A1 3/2016 Baber et al.
2016/0066911 A1 3/2016 Baber et al.
2016/0066912 A1 3/2016 Baber et al.
2016/0066913 A1 3/2016 Swayze et al.
2016/0066914 A1 3/2016 Baber et al.
2016/0066915 A1 3/2016 Baber et al.
2016/0066916 A1 3/2016 Overmyer et al.
2016/0069449 A1 3/2016 Kanai et al.
2016/0074038 A1 3/2016 Leimbach et al.
2016/0074040 A1 3/2016 Widenhouse et al.
2016/0089137 A1 3/2016 Hess et al.
2016/0089141 A1 3/2016 Harris et al.
2016/0089142 A1 3/2016 Harris et al.
2016/0089143 A1 3/2016 Harris et al.
2016/0089146 A1 3/2016 Harris et al.
2016/0089147 A1 3/2016 Harris et al.
2016/0089148 A1 3/2016 Harris et al.
2016/0089149 A1 3/2016 Harris et al.
2016/0100837 A1 4/2016 Huang et al.
2016/0106426 A1 4/2016 Shelton, IV et al.
2016/0106427 A1 4/2016 Shelton, IV et al.
2016/0106431 A1 4/2016 Shelton, IV et al.
2016/0113653 A1 4/2016 Zingman
2016/0120544 A1 5/2016 Shelton, IV et al.
2016/0120545 A1 5/2016 Shelton, IV et al.
2016/0120547 A1 5/2016 Schmid et al.
2016/0128694 A1 5/2016 Baxter, III et al.
2016/0135812 A1 5/2016 Shelton, IV et al.
2016/0166256 A1 6/2016 Baxter, III et al.
2016/0174969 A1 6/2016 Kerr et al.
2016/0174970 A1 6/2016 Shelton, IV et al.
2016/0174971 A1 6/2016 Baxter, III et al.
2016/0174972 A1 6/2016 Shelton, IV et al.
2016/0174973 A1 6/2016 Shelton, IV et al.
2016/0174974 A1 6/2016 Schmid et al.
2016/0174975 A1 6/2016 Shelton, IV et al.
2016/0174976 A1 6/2016 Morgan et al.
2016/0174977 A1 6/2016 Lytle, IV et al.
2016/0174978 A1 6/2016 Overmyer et al.
2016/0174983 A1 6/2016 Shelton, IV et al.
2016/0174984 A1 6/2016 Smith et al.
2016/0174985 A1 6/2016 Baxter, III et al.
2016/0183939 A1 6/2016 Shelton, IV et al.
2016/0183943 A1 6/2016 Shelton, IV
2016/0183944 A1 6/2016 Swensgard et al.
2016/0183945 A1 6/2016 Shelton, IV et al.
2016/0183947 A1 6/2016 Shelton, IV et al.
2016/0183948 A1 6/2016 Shelton, IV et al.
2016/0183950 A1 6/2016 Shelton, IV et al.
2016/0184039 A1 6/2016 Shelton, Iv et al.
2016/0192916 A1 7/2016 Shelton, Iv et al.
2016/0192917 A1 7/2016 Shelton, Iv et al.
2016/0192918 A1 7/2016 Shelton, IV et al.
2016/0192929 A1 7/2016 Schmid et al.
2016/0192933 A1 7/2016 Shelton, IV
2016/0192936 A1 7/2016 Leimbach et al.
2016/0192996 A1 7/2016 Spivey et al.
2016/0192997 A1 7/2016 Spivey et al.
2016/0199059 A1 7/2016 Shelton, IV et al.
2016/0199061 A1 7/2016 Shelton, IV et al.
2016/0199063 A1 7/2016 Mandakolathur Vasudevan et al.
2016/0199064 A1 7/2016 Shelton, IV et al.
2016/0199088 A1 7/2016 Shelton, IV et al.
2016/0199089 A1 7/2016 Hess et al.
2016/0199956 A1 7/2016 Shelton, IV et al.
2016/0206309 A1 7/2016 Hess et al.
2016/0206310 A1 7/2016 Shelton, IV
2016/0206314 A1 7/2016 Scheib et al.
2016/0220246 A1 8/2016 Timm et al.
2016/0220247 A1 8/2016 Timm et al.
2016/0220248 A1 8/2016 Timm et al.
2016/0220249 A1 8/2016 Shelton, IV et al.
2016/0220254 A1 8/2016 Baxter, III et al.
2016/0220266 A1 8/2016 Shelton, IV et al.
2016/0220268 A1 8/2016 Shelton, IV et al.
2016/0235403 A1 8/2016 Shelton, IV et al.
2016/0235404 A1 8/2016 Shelton, IV
2016/0235405 A1 8/2016 Shelton, IV et al.
2016/0235406 A1 8/2016 Shelton, IV et al.
2016/0235408 A1 8/2016 Shelton, IV et al.
2016/0235409 A1 8/2016 Shelton, IV et al.
2016/0235494 A1 8/2016 Shelton, IV et al.
2016/0238108 A1 8/2016 Kanai et al.
2016/0242768 A1 8/2016 Moore et al.
2016/0242769 A1 8/2016 Moore et al.
2016/0242770 A1 8/2016 Moore et al.
2016/0242775 A1 8/2016 Shelton, IV et al.
2016/0242776 A1 8/2016 Shelton, IV et al.
2016/0242777 A1 8/2016 Shelton, IV et al.
2016/0242780 A1 8/2016 Shelton, IV et al.
2016/0242781 A1 8/2016 Shelton, IV et al.
2016/0242782 A1 8/2016 Shelton, IV et al.
2016/0242783 A1 8/2016 Shelton, IV et al.
2016/0249908 A1 9/2016 Shelton, IV et al.
2016/0249909 A1 9/2016 Shelton, IV et al.
2016/0249910 A1 9/2016 Shelton, IV et al.
2016/0249911 A1 9/2016 Timm et al.
2016/0249915 A1 9/2016 Beckman et al.
2016/0249916 A1 9/2016 Shelton, IV et al.
2016/0249917 A1 9/2016 Beckman et al.
2016/0249918 A1 9/2016 Shelton, IV et al.
2016/0249919 A1 9/2016 Savage et al.
2016/0249922 A1 9/2016 Morgan et al.
2016/0249927 A1 9/2016 Beckman et al.
2016/0249930 A1 9/2016 Hall et al.
2016/0249945 A1 9/2016 Shelton, IV et al.
2016/0256071 A1 9/2016 Shelton, IV et al.
2016/0256153 A1 9/2016 Shelton, IV et al.
2016/0256154 A1 9/2016 Shelton, IV et al.
2016/0256155 A1 9/2016 Shelton, IV et al.
2016/0256156 A1 9/2016 Shelton, IV et al.
2016/0256160 A1 9/2016 Shelton, IV et al.

(56) **References Cited**

U.S. PATENT DOCUMENTS

2016/0256161	A1	9/2016	Overmyer et al.
2016/0256162	A1	9/2016	Shelton, IV et al.
2016/0256163	A1	9/2016	Shelton, IV et al.
2016/0256184	A1	9/2016	Shelton, IV et al.
2016/0256185	A1	9/2016	Shelton, IV et al.
2016/0256186	A1	9/2016	Shelton, IV et al.
2016/0256187	A1	9/2016	Shelton, IV et al.
2016/0256229	A1	9/2016	Morgan et al.
2016/0262745	A1	9/2016	Morgan et al.
2016/0262746	A1	9/2016	Shelton, IV et al.
2016/0262760	A1	9/2016	Shelton, IV et al.
2016/0270780	A1	9/2016	Hall et al.
2016/0287249	A1	10/2016	Alexander, III et al.
2016/0287250	A1	10/2016	Shelton, IV et al.
2016/0287251	A1	10/2016	Shelton, IV et al.
2016/0287253	A1	10/2016	Shelton, IV et al.
2016/0287254	A1	10/2016	Baxter, III et al.
2016/0331375	A1	11/2016	Shelton, IV et al.

FOREIGN PATENT DOCUMENTS

AU	2012200178	B2	7/2013
CA	2458946	A1	3/2003
CA	2477181	A1	4/2004
CA	2512960	A1	1/2006
CA	2514274	A1	1/2006
CA	2639177	A1	2/2009
CA	2576347	C	8/2015
CN	86100996	A	9/1986
CN	1163558	A	10/1997
CN	2488482	Y	5/2002
CN	1424891	A	6/2003
CN	1523725	A	8/2004
CN	1545154	A	11/2004
CN	1634601	A	7/2005
CN	2716900	Y	8/2005
CN	2738962	Y	11/2005
CN	1726874	A	2/2006
CN	1726878	A	2/2006
CN	1868411	A	11/2006
CN	1915180	A	2/2007
CN	2868212	Y	2/2007
CN	1960679	A	5/2007
CN	101011286	A	8/2007
CN	101095621	A	1/2008
CN	101111196	A	1/2008
CN	101137402	A	3/2008
CN	101224124	A	7/2008
CN	101254126	A	9/2008
CN	101507620	A	8/2009
CN	101507622	A	8/2009
CN	101507623	A	8/2009
CN	101507625	A	8/2009
CN	101507628	A	8/2009
CN	101541251	A	9/2009
CN	101626731	A	1/2010
CN	101675898	A	3/2010
CN	101683280	A	3/2010
CN	101868203	A	10/2010
CN	101912285	A	12/2010
CN	101028205	A	1/2011
CN	101934098	A	5/2011
CN	102038531	A	5/2011
CN	201949071	U	8/2011
CN	101336835	B	9/2011
CN	102188270	A	9/2011
CN	101779977	B	12/2011
CN	101534723	B	1/2012
CN	101310680	B	4/2012
CN	202397539	U	8/2012
CN	101317782	B	10/2012
CN	101507633	B	2/2013
CN	101023879	B	3/2013
CN	101327137	B	6/2013
CN	101401736	B	6/2013
CN	101332110	B	7/2013
CN	101683281	B	1/2014
CN	103648408	A	3/2014
CN	102166129	B	3/2015
DE	273689	C	5/1914
DE	1775926	A	1/1972
DE	3036217	A1	4/1982
DE	3212828	A1	11/1982
DE	3210466	A1	9/1983
DE	3709067	A1	9/1988
DE	4228909	A1	3/1994
DE	9412228	U1	9/1994
DE	19509116	A1	9/1996
DE	19707373	C1	2/1998
DE	19851291	A1	1/2000
DE	19924311	A1	11/2000
DE	69328576	T2	1/2001
DE	20016423	U1	2/2001
DE	10052679	A1	5/2001
DE	20112837	U1	10/2001
DE	20121753	U1	4/2003
DE	10314827	B3	4/2004
DE	10314072	A1	10/2004
DE	202004012389	U1	11/2004
DE	202007003114	U1	6/2007
EP	0000756	A1	2/1979
EP	0122046	A1	10/1984
EP	0070230	B1	10/1985
EP	0156774	A2	10/1985
EP	0033548	B1	5/1986
EP	0077262	B1	8/1986
EP	0189807	A2	8/1986
EP	0129442	B1	11/1987
EP	0276104	A2	7/1988
EP	0379721	B1	8/1990
EP	0178940	B1	1/1991
EP	0178941	B1	1/1991
EP	0169044	B1	6/1991
EP	0248844	B1	1/1993
EP	0539762	A1	5/1993
EP	0545029	A1	6/1993
EP	0548998	A1	6/1993
EP	0277959	B1	10/1993
EP	0591946	A1	10/1993
EP	0233940	B1	11/1993
EP	0261230	B1	11/1993
EP	0639349	A2	2/1994
EP	0324636	B1	3/1994
EP	0593920	A1	4/1994
EP	0594148	A1	4/1994
EP	0427949	B1	6/1994
EP	0523174	B1	6/1994
EP	0600182	A2	6/1994
EP	0310431	B1	11/1994
EP	0375302	B1	11/1994
EP	0376562	B1	11/1994
EP	0630612	A1	12/1994
EP	0630614	A1	12/1994
EP	0634144	A1	1/1995
EP	0646356	A2	4/1995
EP	0646357	A1	4/1995
EP	0505036	B1	5/1995
EP	0653189	A2	5/1995
EP	0669104	A1	8/1995
EP	0387980	B1	10/1995
EP	0511470	B1	10/1995
EP	0674876	A2	10/1995
EP	0679367	A2	11/1995
EP	0392547	B1	12/1995
EP	0685204	A1	12/1995
EP	0364216	B1	1/1996
EP	0699418	A1	3/1996
EP	0702937	A1	3/1996
EP	0488768	B1	4/1996
EP	0705571	A1	4/1996
EP	0528478	B1	5/1996
EP	0711611	A2	5/1996
EP	0484677	B2	6/1996
EP	0541987	B1	7/1996

(56) **References Cited**

FOREIGN PATENT DOCUMENTS

EP	0667119	B1	7/1996
EP	0737446	A1	10/1996
EP	0748614	A1	12/1996
EP	0708618	B1	3/1997
EP	0770355	A1	5/1997
EP	0503662	B1	6/1997
EP	0447121	B1	7/1997
EP	0621009	B1	7/1997
EP	0625077	B1	7/1997
EP	0633749	B1	8/1997
EP	0710090	B1	8/1997
EP	0578425	B1	9/1997
EP	0621006	B1	10/1997
EP	0625335	B1	11/1997
EP	0552423	B1	1/1998
EP	0592244	B1	1/1998
EP	0648476	B1	1/1998
EP	0649290	B1	3/1998
EP	0598618	B1	9/1998
EP	0676173	B1	9/1998
EP	0678007	B1	9/1998
EP	0869104	A1	10/1998
EP	0603472	B1	11/1998
EP	0605351	B1	11/1998
EP	0878169	A1	11/1998
EP	0879742	A1	11/1998
EP	0695144	B1	12/1998
EP	0722296	B1	12/1998
EP	0760230	B1	2/1999
EP	0623316	B1	3/1999
EP	0650701	B1	3/1999
EP	0537572	B1	6/1999
EP	0923907	A1	6/1999
EP	0640317	A1	9/1999
EP	0843906	B1	3/2000
EP	0552050	B1	5/2000
EP	0833592	B1	5/2000
EP	0832605	B1	6/2000
EP	0830094	B1	9/2000
EP	1034747	A1	9/2000
EP	1034748	A1	9/2000
EP	0694290	B1	11/2000
EP	1050278	A1	11/2000
EP	1053719	A1	11/2000
EP	1053720	A1	11/2000
EP	1055399	A1	11/2000
EP	1055400	A1	11/2000
EP	1058177	A1	12/2000
EP	1080694	A1	3/2001
EP	1090592	A1	4/2001
EP	1095627	A1	5/2001
EP	0806914	B1	9/2001
EP	0768840	B1	12/2001
EP	0908152	B1	1/2002
EP	0717959	B1	2/2002
EP	0872213	B1	5/2002
EP	0862386	B1	6/2002
EP	0949886	B1	9/2002
EP	1238634	A2	9/2002
EP	0858295	B1	12/2002
EP	0656188	B1	1/2003
EP	0717960	B1	2/2003
EP	1284120	A1	2/2003
EP	1287788	A1	3/2003
EP	0717966	B1	4/2003
EP	0869742	B1	5/2003
EP	0829235	B1	6/2003
EP	0887046	B1	7/2003
EP	1323384	A2	7/2003
EP	0852480	B1	8/2003
EP	0891154	B1	9/2003
EP	0813843	B1	10/2003
EP	0873089	B1	10/2003
EP	0856326	B1	11/2003
EP	1374788	A1	1/2004
EP	0741996	B1	2/2004
EP	0814712	B1	2/2004
EP	1402837	A1	3/2004
EP	0705570	B1	4/2004
EP	0959784	B1	4/2004
EP	1407719	A2	4/2004
EP	1411626	A2	4/2004
EP	1086713	B1	5/2004
EP	0996378	B1	6/2004
EP	1426012	A1	6/2004
EP	0833593	B2	7/2004
EP	1442694	A1	8/2004
EP	0888749	B1	9/2004
EP	0959786	B1	9/2004
EP	1453432	A2	9/2004
EP	1459695	A1	9/2004
EP	1254636	B1	10/2004
EP	1473819	A1	11/2004
EP	1477119	A1	11/2004
EP	1479345	A1	11/2004
EP	1479347	A1	11/2004
EP	1479348	A1	11/2004
EP	0754437	B2	12/2004
EP	1025807	B1	12/2004
EP	1001710	B1	1/2005
EP	1496805	A2	1/2005
EP	1256318	B1	2/2005
EP	1520521	A1	4/2005
EP	1520522	A1	4/2005
EP	1520523	A1	4/2005
EP	1520525	A1	4/2005
EP	1522264	A1	4/2005
EP	1523942	A2	4/2005
EP	1550408	A1	7/2005
EP	1557129	A1	7/2005
EP	1064883	B1	8/2005
EP	1067876	B1	8/2005
EP	0870473	B1	9/2005
EP	1157666	B1	9/2005
EP	0880338	B1	10/2005
EP	1158917	B1	11/2005
EP	1344498	B1	11/2005
EP	0906764	B1	12/2005
EP	1330989	B1	12/2005
EP	0771176	B2	1/2006
EP	1621138	A2	2/2006
EP	1621139	A2	2/2006
EP	1621141	A2	2/2006
EP	1621143	A2	2/2006
EP	1621145	A2	2/2006
EP	1621151	A2	2/2006
EP	1034746	B1	3/2006
EP	1201196	B1	3/2006
EP	1632191	A2	3/2006
EP	1647231	A1	4/2006
EP	1065981	B1	5/2006
EP	1082944	B1	5/2006
EP	1230899	B1	5/2006
EP	1652481	A2	5/2006
EP	1382303	B1	6/2006
EP	1253866	B1	7/2006
EP	1676539	A1	7/2006
EP	1032318	B1	8/2006
EP	1045672	B1	8/2006
EP	1617768	B1	8/2006
EP	1693015	A2	8/2006
EP	1400214	B1	9/2006
EP	1702567	A2	9/2006
EP	1129665	B1	11/2006
EP	1400206	B1	11/2006
EP	1721568	A1	11/2006
EP	1256317	B1	12/2006
EP	1285633	B1	12/2006
EP	1728473	A1	12/2006
EP	1728475	A2	12/2006
EP	1736105	A1	12/2006
EP	1011494	B1	1/2007
EP	1479346	B1	1/2007
EP	1484024	B1	1/2007

(56) **References Cited**

FOREIGN PATENT DOCUMENTS

EP	1749485	A1	2/2007
EP	1754445	A2	2/2007
EP	1759812	A1	3/2007
EP	1767157	A1	3/2007
EP	1767163	A1	3/2007
EP	1563792	B1	4/2007
EP	1769756	A1	4/2007
EP	1769758	A1	4/2007
EP	1581128	B1	5/2007
EP	1780825	A1	5/2007
EP	1785097	A2	5/2007
EP	1790293	A2	5/2007
EP	1790294	A1	5/2007
EP	1563793	B1	6/2007
EP	1791473	A2	6/2007
EP	1800610	A1	6/2007
EP	1300117	B1	8/2007
EP	1813199	A1	8/2007
EP	1813200	A2	8/2007
EP	1813201	A1	8/2007
EP	1813202	A1	8/2007
EP	1813203	A2	8/2007
EP	1813207	A1	8/2007
EP	1813209	A1	8/2007
EP	1815950	A1	8/2007
EP	1330991	B1	9/2007
EP	1806103	B1	9/2007
EP	1837041	A1	9/2007
EP	0922435	B1	10/2007
EP	1487359	B1	10/2007
EP	1599146	B1	10/2007
EP	1839596	A1	10/2007
EP	2110083	A2	10/2007
EP	1679096	B1	11/2007
EP	1857057	A2	11/2007
EP	1402821	B1	12/2007
EP	1872727	A1	1/2008
EP	1550410	B1	2/2008
EP	1671593	B1	2/2008
EP	1897502	A1	3/2008
EP	1611856	B1	4/2008
EP	1908417	A2	4/2008
EP	1917929	A1	5/2008
EP	1330201	B1	6/2008
EP	1702568	B1	7/2008
EP	1943955	A2	7/2008
EP	1943957	A2	7/2008
EP	1943959	A1	7/2008
EP	1943962	A2	7/2008
EP	1943964	A1	7/2008
EP	1943976	A2	7/2008
EP	1593337	B1	8/2008
EP	1970014	A1	9/2008
EP	1974678	A2	10/2008
EP	1980213	A2	10/2008
EP	1980214	A2	10/2008
EP	1759645	B1	11/2008
EP	1987780	A2	11/2008
EP	1990014	A2	11/2008
EP	1552795	B1	12/2008
EP	1693008	B1	12/2008
EP	1759640	B1	12/2008
EP	1997439	A2	12/2008
EP	2000101	A2	12/2008
EP	2000102	A2	12/2008
EP	2005894	A2	12/2008
EP	2005897	A2	12/2008
EP	2005901	A1	12/2008
EP	2008595	A2	12/2008
EP	1736104	B1	3/2009
EP	1749486	B1	3/2009
EP	1782743	B1	3/2009
EP	2039302	A2	3/2009
EP	2039308	A2	3/2009
EP	2039316	A2	3/2009
EP	1721576	B1	4/2009
EP	1733686	B1	4/2009
EP	2044890	A1	4/2009
EP	2055243	A2	5/2009
EP	1550409	B1	6/2009
EP	1550413	B1	6/2009
EP	1719461	B1	6/2009
EP	1834594	B1	6/2009
EP	1709911	B1	7/2009
EP	2077093	A2	7/2009
EP	1745748	B1	8/2009
EP	2090231	A1	8/2009
EP	2090237	A1	8/2009
EP	2090241	A1	8/2009
EP	2090244	B1	8/2009
EP	2090245	A1	8/2009
EP	2090254	A1	8/2009
EP	2090256	A2	8/2009
EP	2095777	A2	9/2009
EP	2098170	A2	9/2009
EP	2110082	A1	10/2009
EP	2110084	A2	10/2009
EP	2111803	A2	10/2009
EP	1762190	B8	11/2009
EP	1813208	B1	11/2009
EP	1908426	B1	11/2009
EP	2116195	A1	11/2009
EP	2116197	A2	11/2009
EP	1607050	B1	12/2009
EP	1815804	B1	12/2009
EP	1875870	B1	12/2009
EP	1878395	B1	1/2010
EP	2151204	A1	2/2010
EP	1813211	B1	3/2010
EP	2165656	A2	3/2010
EP	2165660	A2	3/2010
EP	2165664	A1	3/2010
EP	1566150	B1	4/2010
EP	1813206	B1	4/2010
EP	2184014	A2	5/2010
EP	1769754	B1	6/2010
EP	1854416	B1	6/2010
EP	1911408	B1	6/2010
EP	2198787	A1	6/2010
EP	2214610	A1	8/2010
EP	2218409	A1	8/2010
EP	1647286	B1	9/2010
EP	1825821	B1	9/2010
EP	1535565	B1	10/2010
EP	1702570	B1	10/2010
EP	1785098	B1	10/2010
EP	2005896	B1	10/2010
EP	2030578	B1	11/2010
EP	2036505	B1	11/2010
EP	2245993	A2	11/2010
EP	2245994	A1	11/2010
EP	2253280	A1	11/2010
EP	1627605	B1	12/2010
EP	2027811	B1	12/2010
EP	2130498	B1	12/2010
EP	2258282	A2	12/2010
EP	2263568	A2	12/2010
EP	1994890	B1	1/2011
EP	2005900	B1	1/2011
EP	2283780	A2	2/2011
EP	2286738	A2	2/2011
EP	1494595		3/2011
EP	1690502	B1	3/2011
EP	1884201	B1	3/2011
EP	2292153	A1	3/2011
EP	1769755	B1	4/2011
EP	2090240	B1	4/2011
EP	2305135	A1	4/2011
EP	2308388	A1	4/2011
EP	2314254	A2	4/2011
EP	2316345	A1	5/2011
EP	2316366	A2	5/2011
EP	2324776	A2	5/2011
EP	1813205	B1	6/2011

(56) **References Cited**

FOREIGN PATENT DOCUMENTS

EP	2090243	B1	6/2011
EP	2329773	A1	6/2011
EP	2090239	B1	7/2011
EP	2340771	A2	7/2011
EP	2353545	A1	8/2011
EP	2361562	A1	8/2011
EP	2377472	A1	10/2011
EP	1836986	B1	11/2011
EP	1908414	B1	11/2011
EP	2153781	B1	11/2011
EP	2389928	A2	11/2011
EP	1847225	B1	12/2011
EP	2397079	A1	12/2011
EP	2399538	A2	12/2011
EP	1785102	B1	1/2012
EP	2415416	A	2/2012
EP	2090253	B1	3/2012
EP	2430986	A2	3/2012
EP	1347638	B1	5/2012
EP	1943956	B1	5/2012
EP	2446834	A1	5/2012
EP	2455007	A2	5/2012
EP	2457519	A1	5/2012
EP	2462878	A1	6/2012
EP	2462880	A2	6/2012
EP	1813204	B1	7/2012
EP	2189121	B1	7/2012
EP	2248475	B1	7/2012
EP	2005895	B1	8/2012
EP	2090248	B1	8/2012
EP	2481359	A1	8/2012
EP	2486860	A2	8/2012
EP	2486862	A2	8/2012
EP	1908412	B1	9/2012
EP	1935351	B1	9/2012
EP	2497431	A1	9/2012
EP	1550412	B2	10/2012
EP	1616549	B1	10/2012
EP	2030579	B1	10/2012
EP	2090252	B1	10/2012
EP	2517637	A1	10/2012
EP	2517638	A1	10/2012
EP	2517642	A2	10/2012
EP	2517645	A2	10/2012
EP	2517649	A2	10/2012
EP	2517651	A2	10/2012
EP	2526877	A1	11/2012
EP	2526883	A1	11/2012
EP	1884206	B1	3/2013
EP	2090238	B1	4/2013
EP	2586380	A1	5/2013
EP	2586383	A2	5/2013
EP	2606812	A1	6/2013
EP	1982657	B1	7/2013
EP	2614782	A2	7/2013
EP	2090234	B1	9/2013
EP	2633830	A1	9/2013
EP	2644124	A1	10/2013
EP	2644209	A2	10/2013
EP	2649948	A1	10/2013
EP	2649949	A1	10/2013
EP	2700367	A1	2/2014
EP	2713902	A1	4/2014
EP	1772105	B1	5/2014
EP	2759267	A2	7/2014
EP	2772206	A2	9/2014
EP	2777528	A2	9/2014
EP	2777538	A2	9/2014
EP	2803324	A2	11/2014
EP	2446835	B1	1/2015
EP	2845545	A1	3/2015
EP	2923660	A2	9/2015
EP	2823773	B1	4/2016
EP	2131750	B1	5/2016
EP	2510891	B1	6/2016
EP	1915957	B1	8/2016
EP	2364651	B1	11/2016
ES	2396594	T3	2/2013
FR	459743	A	11/1913
FR	999646	A	2/1952
FR	2765794	A	2/1952
FR	1112936	A	3/1956
FR	2598905	A1	11/1987
FR	2689749	B1	7/1994
FR	2815842	A1	10/2000
GB	939929	A	10/1963
GB	1210522	A	10/1970
GB	1217159	A	12/1970
GB	1339394	A	12/1973
GB	2024012	A	1/1980
GB	2109241	A	6/1983
GB	2272159	A	5/1994
GB	2284242	A	5/1995
GB	2286435	A	8/1995
GB	2336214	A	10/1999
GB	2425903	A	11/2006
GB	2423199	B	5/2009
GR	930100110	A	11/1993
JO	H 09-501577	A	2/1997
JP	S 47-11908	Y1	5/1972
JP	S 50-33988	U	4/1975
JP	S56-112235	A	9/1981
JP	S 58500053	A	1/1983
JP	S 58-501360	A	8/1983
JP	S 59-174920	A	3/1984
JP	S 60-100955	A	6/1985
JP	S 60-212152	A	10/1985
JP	S 61-98249	A	5/1986
JP	S 61502036	A	9/1986
JP	S 62-170011	U	10/1987
JP	S63-59764	A	3/1988
JP	S 63-147449	A	6/1988
JP	S 63-203149	A	8/1988
JP	H02-279149	A	11/1990
JP	H03-12126	A	1/1991
JP	H03-18354	A	1/1991
JP	H 03-78514	U	8/1991
JP	H 03-85009	U	8/1991
JP	H04-215747	A	8/1992
JP	H 04-131860	U	12/1992
JP	H05-84252	A	4/1993
JP	H05-123325	A	5/1993
JP	H06-30945	A	2/1994
JP	H06-54857	A	3/1994
JP	H06-63054	A	3/1994
JP	H 06-26812	U	4/1994
JP	H06-121798	A	5/1994
JP	H06-125913	A	5/1994
JP	H06-197901	A	7/1994
JP	H06-237937	A	8/1994
JP	H06-327684	A	11/1994
JP	H 07-9622	U	2/1995
JP	H 07-31623	A	2/1995
JP	H07-47070	A	2/1995
JP	H07-51273	A	2/1995
JP	H07-124166	A	5/1995
JP	H07-163574	A	6/1995
JP	H07-171163	A	7/1995
JP	H07-255735	A	10/1995
JP	H07-285089	A	10/1995
JP	H07-299074	A	11/1995
JP	H08-33641	A	2/1996
JP	H08-33642	A	2/1996
JP	H08-164141	A	6/1996
JP	H08-182684	A	7/1996
JP	H08-507708	Y1	8/1996
JP	H08-229050	A	9/1996
JP	H08-289895	A	11/1996
JP	H08-336540	A	12/1996
JP	H08-336544	A	12/1996
JP	H 09-501081	A	2/1997
JP	H09-164144	A	6/1997
JP	H10-113352	A	5/1998
JP	H10-118090	A	5/1998

(56) **References Cited**

FOREIGN PATENT DOCUMENTS

JP	10-512469	A	12/1998
JP	2000-014632	A	1/2000
JP	2000-033071	A	2/2000
JP	2000-112002	A	4/2000
JP	2000-166932	A	6/2000
JP	2000-171730	A	6/2000
JP	2000-287987	A	10/2000
JP	2000-325303	A	11/2000
JP	2001-037763	A	2/2001
JP	2001-046384	A	2/2001
JP	2001-087272	A	4/2001
JP	2001-514541	A	9/2001
JP	2001-276091	A	10/2001
JP	2001-286477	A	10/2001
JP	2001-517473	A	10/2001
JP	2002-051974	A	2/2002
JP	2002-085415	A	3/2002
JP	2002-143078	A	5/2002
JP	2002-204801	A	7/2002
JP	2002-528161	A	9/2002
JP	2002-314298	A	10/2002
JP	2002-369820	A	12/2002
JP	2002-542186	A	12/2002
JP	2003-000603	A	1/2003
JP	2003-500153	A	1/2003
JP	2003-504104	A	2/2003
JP	2003-135473	A	5/2003
JP	2003-148903	A	5/2003
JP	2003-164066	A	6/2003
JP	2003-521301	A	7/2003
JP	2003-523251	A	8/2003
JP	2003-523254	A	8/2003
JP	2003-300416	A	10/2003
JP	2004-147701	A	5/2004
JP	2004-162035	A	6/2004
JP	2004-229976	A	8/2004
JP	2004-524076	A	8/2004
JP	2004-531280	A	10/2004
JP	2004-532084	A	10/2004
JP	2004-532676	A	10/2004
JP	2004-329624	A	11/2004
JP	2004-337617	A	12/2004
JP	2004-344662	A	12/2004
JP	2004-344663	A	12/2004
JP	2005-013573	A	1/2005
JP	2005-028147	A	2/2005
JP	2005-028148	A	2/2005
JP	2005-028149	A	2/2005
JP	2005-505309	A	2/2005
JP	2005-505322	A	2/2005
JP	2005-505334	A	2/2005
JP	2005-080702	A	3/2005
JP	2005-103280	A	4/2005
JP	2005-103281	A	4/2005
JP	2005-103293	A	4/2005
JP	2005-511131	A	4/2005
JP	2005-511137	A	4/2005
JP	2005-131163	A	5/2005
JP	2005-131164	A	5/2005
JP	2005-131173	A	5/2005
JP	2005-131211	A	5/2005
JP	2005-131212	A	5/2005
JP	2005-137423	A	6/2005
JP	2005-137919	A	6/2005
JP	2005-144183	A	6/2005
JP	2005-152416	A	6/2005
JP	2005-516714	A	6/2005
JP	2005-187954	A	7/2005
JP	2005-521109	A	7/2005
JP	2005-523105	A	8/2005
JP	2005-524474	A	8/2005
JP	4461008	B2	8/2005
JP	2005-296412	A	10/2005
JP	2005-529675	A	10/2005
JP	2005-328882	A	12/2005
JP	2005-335432	A	12/2005
JP	2005-342267	A	12/2005
JP	2006-034975	A	2/2006
JP	2006-034977	A	2/2006
JP	2006-034978	A	2/2006
JP	2006-034980	A	2/2006
JP	2006-506106	A	2/2006
JP	2006-510879	A	3/2006
JP	3791856	B2	6/2006
JP	2006-187649	A	7/2006
JP	2006-218297	A	8/2006
JP	2006-223872	A	8/2006
JP	2006-281405	A	10/2006
JP	2006-289064	A	10/2006
JP	2006-334412	A	12/2006
JP	2006-334417	A	12/2006
JP	2006-346445	A	12/2006
JP	2007-000634	A	1/2007
JP	2007-050253	A	3/2007
JP	2007-061628	A	3/2007
JP	2007-083051	A	4/2007
JP	2007-098130	A	4/2007
JP	2007-105481	A	4/2007
JP	3906843	B2	4/2007
JP	2007-117725	A	5/2007
JP	2007-130471	A	5/2007
JP	2007-130479	A	5/2007
JP	2007-222615	A	6/2007
JP	3934161	B2	6/2007
JP	2007-203047	A	8/2007
JP	2007-203049	A	8/2007
JP	2007-203051	A	8/2007
JP	2007-203055	A	8/2007
JP	2007-203057	A	8/2007
JP	2007-524435	A	8/2007
JP	2007-229448	A	9/2007
JP	2007-526026	A	9/2007
JP	2007-252916	A	10/2007
JP	4001860	B2	10/2007
JP	2007-307373	A	11/2007
JP	2007-325922	A	12/2007
JP	2008-068073	A	3/2008
JP	2008-510515	A	4/2008
JP	2008-516669	A	5/2008
JP	2008-206967	A	9/2008
JP	2008-212637	A	9/2008
JP	2008-212638	A	9/2008
JP	2008-220956	A	9/2008
JP	2009-507526	A	9/2008
JP	2008-237881	A	10/2008
JP	2008-259860	A	10/2008
JP	2008-264535	A	11/2008
JP	2008-283459	A	11/2008
JP	2008-307393	A	12/2008
JP	2009-000531	A	1/2009
JP	2009-006137	A	1/2009
JP	2009-502351	A	1/2009
JP	2009-502352	A	1/2009
JP	2009-022742	A	2/2009
JP	2009-506799	A	2/2009
JP	2009-072595	A	4/2009
JP	2009-072599	A	4/2009
JP	2009-090113	A	4/2009
JP	2009-106752	A	5/2009
JP	2009-189821	A	8/2009
JP	2009-189823	A	8/2009
JP	2009-189836	A	8/2009
JP	2009-189837	A	8/2009
JP	2009-189838	A	8/2009
JP	2009-189847	A	8/2009
JP	2009-201998	A	9/2009
JP	2009-536082	A	10/2009
JP	2009-261944	A	11/2009
JP	2009-268908	A	11/2009
JP	2009-538684	A	11/2009
JP	2009-539420	A	11/2009
JP	2009-291604	A	12/2009
JP	2010-504808	A	2/2010
JP	2010-504809	A	2/2010

(56) **References Cited**

FOREIGN PATENT DOCUMENTS

JP	2010-504813	A	2/2010
JP	2010-504846	A	2/2010
JP	2010-505524	A	2/2010
JP	2010-069307	A	4/2010
JP	2010-069310	A	4/2010
JP	2010-075694	A	4/2010
JP	2010-075695	A	4/2010
JP	2010-088876	A	4/2010
JP	2010-098844	A	4/2010
JP	2010-142636	A	7/2010
JP	2010-214166	A	9/2010
JP	4549018	B2	9/2010
JP	2010-279690	A	12/2010
JP	2010-540192	A	12/2010
JP	2011-005260	A	1/2011
JP	2011-504391	A	2/2011
JP	2011-072797	A	4/2011
JP	2011-078763	A	4/2011
JP	2011-524199	A	9/2011
JP	4783373	B2	9/2011
JP	2011-251156	A	12/2011
JP	2012-040398	A	3/2012
JP	2012-517289	A	8/2012
JP	5140421	B2	2/2013
JP	5162595	B2	3/2013
JP	2013-128791	A	7/2013
JP	5212039	B2	7/2013
JP	6007357	B2	10/2013
JP	5333899	B2	11/2013
KR	20110003229	A	1/2011
RU	2008830	C1	3/1994
RU	2052979	C1	1/1996
RU	2098025	C1	12/1997
RU	2141279	C1	11/1999
RU	2144791	C1	1/2000
RU	2181566	C2	4/2002
RU	2187249	C2	8/2002
RU	2189091	C2	9/2002
RU	32984	U1	10/2003
RU	2225170	C2	3/2004
RU	42750	U1	12/2004
RU	61114	U1	2/2007
SU	189517	A	1/1967
SU	328636	A	9/1972
SU	511939	A1	4/1976
SU	674747	A1	7/1979
SU	886900	A1	12/1981
SU	1009439	A	4/1983
SU	1022703	A1	6/1983
SU	1333319	A2	8/1987
SU	1377053	A1	2/1988
SU	1509051	A1	9/1989
SU	1561964	A1	5/1990
SU	1722476	A1	5/1990
SU	1708312	A1	1/1992
SU	1752361	A1	3/1992
SU	1814161	A1	5/1993
WO	WO 82/02824	A1	9/1982
WO	WO 86/02254	A1	4/1986
WO	WO 91/15157	A1	10/1991
WO	WO 92/20295	A1	11/1992
WO	WO 92/21300	A1	12/1992
WO	WO 93/08755	A1	5/1993
WO	WO 93/13718	A1	7/1993
WO	WO 93/14690	A1	8/1993
WO	WO 93/15648	A1	8/1993
WO	WO 93/15850	A1	8/1993
WO	WO 93/19681	A1	10/1993
WO	WO 94/00060	A1	1/1994
WO	WO 94/11057	A1	5/1994
WO	WO 94/12108	A1	6/1994
WO	WO 94/17737	A1	8/1994
WO	WO 94/18893	A1	9/1994
WO	WO 94/20030	A1	9/1994
WO	WO 94/22378	A1	10/1994
WO	WO 94/23659	A1	10/1994
WO	WO 94/24943	A1	11/1994
WO	WO 94/24947	A1	11/1994
WO	WO 95/02369	A1	1/1995
WO	WO 95/03743	A1	2/1995
WO	WO 95/06817	A1	3/1995
WO	WO 95/09576	A1	4/1995
WO	WO 95/09577	A1	4/1995
WO	WO 95/14436	A1	6/1995
WO	WO 95/17855	A1	7/1995
WO	WO 95/18383	A1	7/1995
WO	WO 95/18572	A1	7/1995
WO	WO 95/19739	A1	7/1995
WO	WO 95/20360	A1	8/1995
WO	WO 95/23557	A1	9/1995
WO	WO 95/24865	A1	9/1995
WO	WO 95/25471	A3	9/1995
WO	WO 95/26562	A1	10/1995
WO	WO 95/29639	A1	11/1995
WO	WO 96/04858	A1	2/1996
WO	WO 96/18344	A2	6/1996
WO	WO 96/19151	A1	6/1996
WO	WO 96/19152	A1	6/1996
WO	WO 96/20652	A1	7/1996
WO	WO 96/21119	A1	7/1996
WO	WO 96/22055	A1	7/1996
WO	WO 96/23448	A1	8/1996
WO	WO 96/24301	A1	8/1996
WO	WO 96/27337	A1	9/1996
WO	WO 96/31155	A1	10/1996
WO	WO 96/35464	A1	11/1996
WO	WO 96/39085	A1	12/1996
WO	WO 96/39086	A1	12/1996
WO	WO 96/39087	A1	12/1996
WO	WO 96/39088	A1	12/1996
WO	WO 96/39089	A1	12/1996
WO	WO 97/00646	A1	1/1997
WO	WO 97/00647	A1	1/1997
WO	WO 97/01989	A1	1/1997
WO	WO 97/06582	A1	2/1997
WO	WO 97/10763	A1	3/1997
WO	WO 97/10764	A1	3/1997
WO	WO 97/11648	A2	4/1997
WO	WO 97/11649	A1	4/1997
WO	WO 97/15237	A1	5/1997
WO	WO 97/24073	A1	7/1997
WO	WO 97/24993	A1	7/1997
WO	WO 97/30644	A1	8/1997
WO	WO 97/34533	A1	9/1997
WO	WO 97/37598	A1	10/1997
WO	WO 97/39688	A2	10/1997
WO	WO 97/41767	A2	11/1997
WO	WO 98/01080	A1	1/1998
WO	WO 98/17180	A1	4/1998
WO	WO 98/22154	A2	5/1998
WO	WO 98/27880	A1	7/1998
WO	WO 98/30153	A1	7/1998
WO	WO 98/47436	A1	10/1998
WO	WO 98/58589	A1	12/1998
WO	WO 99/02090	A1	1/1999
WO	WO 99/03407	A1	1/1999
WO	WO 99/03408	A1	1/1999
WO	WO 99/03409	A1	1/1999
WO	WO 99/12483	A1	3/1999
WO	WO 99/12487	A1	3/1999
WO	WO 99/12488	A1	3/1999
WO	WO 99/15086	A1	4/1999
WO	WO 99/15091	A1	4/1999
WO	WO 99/23933	A2	5/1999
WO	WO 99/23959	A1	5/1999
WO	WO 99/25261	A1	5/1999
WO	WO 99/29244	A1	6/1999
WO	WO 99/34744	A1	7/1999
WO	WO 99/45849	A1	9/1999
WO	WO 99/48430	A1	9/1999
WO	WO 99/51158	A1	10/1999
WO	WO 00/24322	A1	5/2000
WO	WO 00/24330	A1	5/2000
WO	WO 00/41638	A1	7/2000

(56) **References Cited**

FOREIGN PATENT DOCUMENTS

WO	WO 00/48506	A1	8/2000
WO	WO 00/53112	A2	9/2000
WO	WO 00/54653	A1	9/2000
WO	WO 00/57796	A1	10/2000
WO	WO 00/64365	A1	11/2000
WO	WO 00/72762	A1	12/2000
WO	WO 00/72765	A1	12/2000
WO	WO 00/78222	A1	12/2000
WO	WO 01/03587	A1	1/2001
WO	WO 01/05702	A1	1/2001
WO	WO 01/10482	A1	2/2001
WO	WO 01/35845	A1	5/2001
WO	WO 01/54594	A1	8/2001
WO	WO 01/58371	A1	8/2001
WO	WO 01/62158	A2	8/2001
WO	WO 01/62161	A1	8/2001
WO	WO 01/62162	A1	8/2001
WO	WO 01/62163	A1	8/2001
WO	WO 01/62164	A2	8/2001
WO	WO 01/62169	A2	8/2001
WO	WO 01/78605	A2	10/2001
WO	WO 01/80757	A2	11/2001
WO	WO 01/91646	A1	12/2001
WO	WO 02/00121	A1	1/2002
WO	WO 02/07608	A2	1/2002
WO	WO 02/07618	A1	1/2002
WO	WO 02/17799	A1	3/2002
WO	WO 02/19920	A1	3/2002
WO	WO 02/19932	A1	3/2002
WO	WO 02/26143	A1	4/2002
WO	WO 02/30297	A2	4/2002
WO	WO 02/32322	A2	4/2002
WO	WO 02/36028	A1	5/2002
WO	WO 02/43571	A2	6/2002
WO	WO 02/058568	A1	8/2002
WO	WO 02/060328	A1	8/2002
WO	WO 02/065933	A2	8/2002
WO	WO 02/067785	A2	9/2002
WO	WO 02/080781	A2	10/2002
WO	WO 02/085218	A2	10/2002
WO	WO 02/087586	A1	11/2002
WO	WO 02/098302	A1	12/2002
WO	WO 03/000138	A2	1/2003
WO	WO 03/001329	A2	1/2003
WO	WO 03/001986	A2	1/2003
WO	WO 03/013363	A1	2/2003
WO	WO 03/013372	A2	2/2003
WO	WO 03/015604	A2	2/2003
WO	WO 03/020106	A2	3/2003
WO	WO 03/020139	A2	3/2003
WO	WO 03/024339	A1	3/2003
WO	WO 03/079909	A3	3/2003
WO	WO 03/030743	A2	4/2003
WO	WO 03/037193	A1	5/2003
WO	WO 03/047436	A3	6/2003
WO	WO 03/055402	A1	7/2003
WO	WO 03/057048	A1	7/2003
WO	WO 03/057058	A1	7/2003
WO	WO 03/063694	A1	8/2003
WO	WO 03/077769	A1	9/2003
WO	WO 03/079911	A1	10/2003
WO	WO 03/082126	A1	10/2003
WO	WO 03/086206	A1	10/2003
WO	WO 03/088845	A2	10/2003
WO	WO 03/090630	A2	11/2003
WO	WO 03/094743	A1	11/2003
WO	WO 03/094745	A1	11/2003
WO	WO 03/094746	A1	11/2003
WO	WO 03/094747	A1	11/2003
WO	WO 03/101313	A1	12/2003
WO	WO 03/105698	A2	12/2003
WO	WO 03/105702	A2	12/2003
WO	WO 2004/004578	A1	1/2004
WO	WO 2004/006980	A2	1/2004
WO	WO 2004/011037	A2	2/2004
WO	WO 2004/014238	A2	2/2004
WO	WO 2004/019769	A1	3/2004
WO	WO 2004/019803	A1	3/2004
WO	WO 2004/021868	A2	3/2004
WO	WO 2004/028585	A2	4/2004
WO	WO 2004/030554	A1	4/2004
WO	WO 2004/032754	A2	4/2004
WO	WO 2004/032760	A2	4/2004
WO	WO 2004/032762	A1	4/2004
WO	WO 2004/032763	A2	4/2004
WO	WO 2004/032783	A1	4/2004
WO	WO 2004/034875	A2	4/2004
WO	WO 2004/047626	A1	6/2004
WO	WO 2004/047653	A2	6/2004
WO	WO 2004/049956	A2	6/2004
WO	WO 2004/050971	A2	6/2004
WO	WO 2004/052426	A2	6/2004
WO	WO 2004/056276	A1	7/2004
WO	WO 2004/056277	A1	7/2004
WO	WO 2004/062516	A1	7/2004
WO	WO 2004/064600	A2	8/2004
WO	WO 2004/078050	A2	9/2004
WO	WO 2004/078051	A2	9/2004
WO	WO 2004/078236	A2	9/2004
WO	WO 2004/086987	A1	10/2004
WO	WO 2004/096015	A2	11/2004
WO	WO 2004/096057	A2	11/2004
WO	WO 2004/103157	A2	12/2004
WO	WO 2004/105593	A1	12/2004
WO	WO 2004/105621	A1	12/2004
WO	WO 2004/112618	A2	12/2004
WO	WO 2004/112652	A2	12/2004
WO	WO 2005/027983	A2	3/2005
WO	WO 2005/037329	A2	4/2005
WO	WO 2005/042041	A1	5/2005
WO	WO 2005/044078	A2	5/2005
WO	WO 2005/048809	A1	6/2005
WO	WO 2005/055846	A1	6/2005
WO	WO 2005/072634	A2	8/2005
WO	WO 2005/078892	A1	8/2005
WO	WO 2005/079675	A2	9/2005
WO	WO 2005/087128	A1	9/2005
WO	WO 2005/096954	A2	10/2005
WO	WO 2005/112806	A2	12/2005
WO	WO 2005/112808	A1	12/2005
WO	WO 2005/115251	A1	12/2005
WO	WO 2005/115253	A2	12/2005
WO	WO 2005/117735	A1	12/2005
WO	WO 2005/122936	A1	12/2005
WO	WO 2006/023486	A1	3/2006
WO	WO 2006/023578	A2	3/2006
WO	WO 2006/027014	A1	3/2006
WO	WO 2006/028314	A1	3/2006
WO	WO 2006/044490	A2	4/2006
WO	WO 2006/044581	A2	4/2006
WO	WO 2006/044810	A2	4/2006
WO	WO 2006/049852	A2	5/2006
WO	WO 2006/051252	A1	5/2006
WO	WO 2006/059067	A1	6/2006
WO	WO 2006/083748	A1	8/2006
WO	WO 2006/085389	A1	8/2006
WO	WO 2006/092563	A1	9/2006
WO	WO 2006/092565	A1	9/2006
WO	WO 2006/115958	A1	11/2006
WO	WO 2006/125940	A1	11/2006
WO	WO 2006/132992	A2	12/2006
WO	WO 2007/002180	A2	1/2007
WO	WO 2007/016290	A2	2/2007
WO	WO 2007/018898	A2	2/2007
WO	WO 2007/051000	A2	5/2007
WO	WO 2007/059233	A2	5/2007
WO	WO 2007/074430	A1	7/2007
WO	WO 2007/089603	A2	8/2007
WO	WO 2007/098220	A2	8/2007
WO	WO 2007/121579	A1	11/2007
WO	WO 2007/129121	A1	11/2007
WO	WO 2007/131110	A2	11/2007
WO	WO 2007/137304	A2	11/2007
WO	WO 2007/139734	A2	12/2007

(56) **References Cited**

FOREIGN PATENT DOCUMENTS

WO	WO 2007/142625	A2	12/2007
WO	WO 2007/145825	A2	12/2007
WO	WO 2007/146987	A2	12/2007
WO	WO 2007/147439	A1	12/2007
WO	WO 2008/020964	A2	2/2008
WO	WO 2008/021687	A1	2/2008
WO	WO 2008/021969	A2	2/2008
WO	WO 2008/039237	A1	4/2008
WO	WO 2008/039249	A1	4/2008
WO	WO 2008/039270	A1	4/2008
WO	WO 2008/045383	A2	4/2008
WO	WO 2008/057281	A2	5/2008
WO	WO 2008/070763	A1	6/2008
WO	WO 2008/080148	A2	7/2008
WO	WO 2008/089404	A2	7/2008
WO	WO 2008/101080	A1	8/2008
WO	WO 2008/101228	A2	8/2008
WO	WO 2008/103797	A2	8/2008
WO	WO 2008/109123	A2	9/2008
WO	WO 2008/109125	A1	9/2008
WO	WO 2008/112912	A2	9/2008
WO	WO 2008/118728	A1	10/2008
WO	WO 2008/118928	A2	10/2008
WO	WO 2008/124748	A1	10/2008
WO	WO 2008/131357	A1	10/2008
WO	WO 2009/005969	A2	1/2009
WO	WO 2009/022614	A1	2/2009
WO	WO 2009/023851	A1	2/2009
WO	WO 2009/033057	A2	3/2009
WO	WO 2009/039506	A1	3/2009
WO	WO 2009/046394	A1	4/2009
WO	WO 2009/066105	A1	5/2009
WO	WO 2009/067649	A2	5/2009
WO	WO 2009/091497	A2	7/2009
WO	WO 2009/120944	A2	10/2009
WO	WO 2009/137761	A2	11/2009
WO	WO 2009/143092	A1	11/2009
WO	WO 2009/143331	A1	11/2009
WO	WO 2009/150650	A2	12/2009
WO	WO 2009/152307	A1	12/2009
WO	WO 2010/028332	A2	3/2010
WO	WO 2010/030434	A1	3/2010
WO	WO 2010/045425	A1	4/2010
WO	WO 2010/050771	A2	5/2010
WO	WO 2010/054404	A1	5/2010
WO	WO 2010/056714	A1	5/2010
WO	WO 2010/063795	A1	6/2010
WO	WO 2010/090940	A1	8/2010
WO	WO 2010/093333	A1	8/2010
WO	WO 2010/098871	A2	9/2010
WO	WO 2011/008672	A2	1/2011
WO	WO 2011/013103	A1	2/2011
WO	WO 2011/044343	A2	4/2011
WO	WO 2011/060311	A2	5/2011
WO	WO 2011/127137	A1	10/2011
WO	WO 2012/006306	A2	1/2012
WO	WO 2012/009431	A2	1/2012
WO	WO 2012/021671	A1	2/2012
WO	WO 2012/040438	A1	3/2012
WO	WO 2012/044551	A1	4/2012
WO	WO 2012/044554	A1	4/2012
WO	WO 2012/044597	A1	4/2012
WO	WO 2012/044606	A2	4/2012
WO	WO 2012/044820	A1	4/2012
WO	WO 2012/044844	A2	4/2012
WO	WO 2012/044853	A1	4/2012
WO	WO 2012/044854	A1	4/2012
WO	WO 2012/058213	A2	5/2012
WO	WO 2012/068156	A2	5/2012
WO	WO 2012/109760	A1	8/2012
WO	WO 2012/127462	A1	9/2012
WO	WO 2012/135705	A1	10/2012
WO	WO 2012/143913	A2	10/2012
WO	WO 2012/148667	A2	11/2012
WO	WO 2012/148703	A2	11/2012
WO	WO 2012/160163	A1	11/2012
WO	WO 2012/166503	A1	12/2012
WO	WO 2013/009252	A2	1/2013
WO	WO 2013/009699	A2	1/2013
WO	WO 2013/036409	A1	3/2013
WO	WO 2013/043707	A2	3/2013
WO	WO 2013/043717	A1	3/2013
WO	WO 2013/043721	A2	3/2013
WO	WO 2013/062978	A2	5/2013
WO	WO 2013/148762	A2	10/2013
WO	WO 2013/167427	A1	11/2013
WO	WO 2014/004199	A1	1/2014
WO	WO 2014/004294	A2	1/2014

OTHER PUBLICATIONS

U.S. Appl. No. 13/851,676, filed Mar. 27, 2013.
U.S. Appl. No. 13/851,693, filed Mar. 27, 2013.
U.S. Appl. No. 13/851,684, filed Mar. 27, 2013.
U.S. Appl. No. 14/187,383, filed Feb. 24, 2014.
U.S. Appl. No. 14/187,386, filed Feb. 24, 2014.
U.S. Appl. No. 14/187,385, filed Feb. 24, 2014.
U.S. Appl. No. 14/187,384, filed Feb. 24, 2014.
U.S. Appl. No. 14/187,389, filed Feb. 24, 2014.
International Search Report and Written Opinion for PCT/US2015/015103 dated Nov. 31, 2015 (13 pages).
Disclosed Anonymously, "Motor-Driven Surgical Stapler Improvements," Research Disclosure Database No. 526041, Published: Feb. 2008.
C.C. Thompson et al., "Peroral Endoscopic Reduction of Dilated Gastrojejunal Anastomosis After Roux-en-Y Gastric Bypass: A Possible New Option for Patients with Weight Regain," Surg Endosc (2006) vol. 20, pp. 1744-1748.
B.R. Coolman, DVM, MS et al., "Comparison of Skin Staples With Sutures for Anastomosis of the Small Intestine in Dogs," Abstract; http://www.blackwell-synergy.com/doi/abs/10.1053/jvet.2000.7539?cookieSet=1&journalCode=vsu which redirects to http://www3.interscience.wiley.com/journal/119040681/abstract?CRETRY=1&SRETRY=0; [online] accessed: Sep. 22, 2008 (2 pages).
The Sodem Aseptic Battery Transfer Kit, Sodem Systems, (2000), 3 pages.
"Biomedical Coatings," Fort Wayne Metals, Research Products Corporation, obtained online at www.fwmetals.com on Jun. 21, 2010 (1 page).
Van Meer et al., "A Disposable Plastic Compact Wrist for Smart Minimally Invasive Surgical Tools," LAAS/CNRS (Aug. 2005).
Breedveld et al., "A New, Easily Miniaturized Sterrable Endoscope," IEEE Engineering in Medicine and Biology Magazine (Nov./Dec. 2005).
D. Tuite, Ed., "Get the Lowdown on Ultracapacitors," Nov. 15, 2007; [online] URL: http://electronicdesign.com/Articles/Print.cfm?ArticleID=17465, accessed Jan. 15, 2008 (5 pages).
Datasheet for Panasonic TK Relays Ultra Low Profile 2 A Polarized Relay, Copyright Matsushita Electric Works, Ltd. (Known of at least as early as Aug. 17, 2010), 5 pages.
ASTM procedure D2240-00, "Standard Test Method for Rubber Property-Durometer Hardness," (Published Aug. 2000).
ASTM procedure D2240-05, "Standard Test Method for Rubber Property-Durometer Hardness," (Published Apr. 2010).
Covidien Brochure, "Endo GIA™ Reloads with Tri-Staple™ Technology," (2010), 1 page.
Covidien Brochure, "Endo GIA™ Reloads with Tri-Staple™ Technology and Endo GIA™ Ultra Universal Staplers," (2010), 2 pages.
Covidien Brochure, "Endo GIA™ Black Reload with Tri-Staple ™ Technology," (2012), 2 pages.
Covidien Brochure, "Endo GIA™ Curved Tip Reload with Tri-Staple™ Technology," (2012), 2 pages.
Covidien Brochure, "Endo GIA™ Reloads with Tri-Staple™ Technology," (2010), 2 pages.
Covidien Brochure, "Endo GIA™ Ultra Universal Stapler," (2010), 2 pages.

(56) **References Cited**

OTHER PUBLICATIONS

Miyata et al., "Biomolecule-Sensitive Hydrogels," Advanced Drug Delivery Reviews, 54 (2002) pp. 79-98.
Jeong et al., "Thermosensitive Sol-Gel Reversible Hydrogels," Advanced Drug Delivery Reviews, 54 (2002) pp. 37-51.
Byrne et al., "Molecular Imprinting Within Hydrogels," Advanced Drug Delivery Reviews, 54 (2002) pp. 149-161.
Qiu et al., "Environment-Sensitive Hydrogels for Drug Delivery," Advanced Drug Delivery Reviews, 53 (2001) pp. 321-339.
Hoffman, "Hydrogels for Biomedical Applications," Advanced Drug Delivery Reviews, 43 (2002) pp. 3-12.
Hoffman, "Hydrogels for Biomedical Applications," Advanced Drug Delivery Reviews, 54 (2002) pp. 3-12.
Peppas, "Physiologically Responsive Hydrogels," Journal of Bioactive and Compatible Polymers, vol. 6 (Jul. 1991) pp. 241-246.
Ebara, "Carbohydrate-Derived Hydrogels and Microgels," Engineered Carbohydrate-Based Materials for Biomedical Applications: Polymers, Surfaes, Dendrirners, Nanoparticles, and Hydrogels, Edited by Ravin Narain, 2011, pp. 337-345.
Peppas, Editor "Hydrogels in Medicine and Pharmacy," vol. I, Fundamentals, CRC Press, 1986.
Matsuda, "Thermodynamics of Formation of Porous Polymeric Membrane from Solutions," Polymer Journal, vol. 23, No. 5, pp. 435-444 (1991).
Young, "Microcellular foams via phase separation," Journal of Vacuum Science & Technology A 4(3), (May/Jun. 1986).
Chen et al., "Elastomeric Biomaterials for Tissue Engineering," Progress in Polymer Science 38 (2013), pp. 584-671.
Pitt et al., "Attachment of Hyaluronan to Metallic Surfaces," J. Biomed. Mater. Res. 68A: pp. 95-106, 2004.
Schellhammer et al., "Poly-Lactic-Acid for Coating of Endovascular Stents: Preliminary Results in Canine Experimental Av-Fistulae," Mat.-wiss. u. Werkstofftech., 32, pp. 193-199 (2001).
Solorio et al., "Gelatin Microspheres Crosslinked with Genipin for Local Delivery of Growth Factors," J. Tissue Eng. Regen. Med. (2010), 4(7): pp. 514-523.
http://ninpgan.net/publications/51-100/89.pdf; 2004, Ning Pan, on Uniqueness of Fibrous Materials, Design & Nature II. Eds: Colins, M. and Brebbia, C. WIT Press, Boston, 493-504.
Covidien iDrive™ Ultra in Service Reference Card, "iDrive™ Ultra Powered Stapling Device," (4 pages).
Covidien iDrive™ Ultra Powered Stapling System ibrochure, "The Power of iDrive™ Ultra Powered Stapling System and Tri-Staple™ Technology," (23 pages).
Seils et al., Covidien Summary: Clinical Study "UCONN Biodynamics: Final Report on Results," (2 pages).
Covidien "iDrive™ Ultra Powered Stapling System, A Guide for Surgeons," (6 pages).
Covidien "iDrive™ Ultra Powered Stapling System, Cleaning and Sterilization Guide," (2 pages).
Covidien brochure "iDrive™ Ultra Powered Stapling System," (6 pages).
"Indian Standard: Automotive Vehicles—Brakes and Braking Systems (IS 11852-1:2001)", Mar. 1, 2001.
Fast, Versatile Blackfin Processors Handle Advanced RFID Reader Applications; Analog Dialogue: vol. 40—Sep. 2006; http://www.analog.com/library/analogDialogue/archives/40-09/rfid.pdf; Wayback Machine to Feb. 15, 2012.
Serial Communication Protocol; Michael Lemmon Feb. 1, 2009; http://www3.nd.edu/~lemmon/cou rses/ee224/web-manual/web-manual/lab12/node2.html; Wayback Machine to Apr. 29, 2012.
Allegro MicroSystems, LLC, Automotive Full Bridge MOSFET Driver, A3941-DS, Rev. 5, 21 pages, http://www.allegromicro.com/~/media/Files/Datasheets/A3941-Datasheet.ashx?la=en.
Patrick J. Sweeney: "RFID for Dummies", Mar. 11, 2010, pp. 365-365, XP055150775, ISBN: 978-1-11-805447-5, Retrieved from the Internet: URL: books.google.de/books?isbn=1118054474 [retrieved on Nov. 4, 2014]—book not attached.
Data Sheet of LM4F230H5QR, 2007.
U.S. Appl. No. 12/031,573, filed Feb. 14, 2008.

* cited by examiner

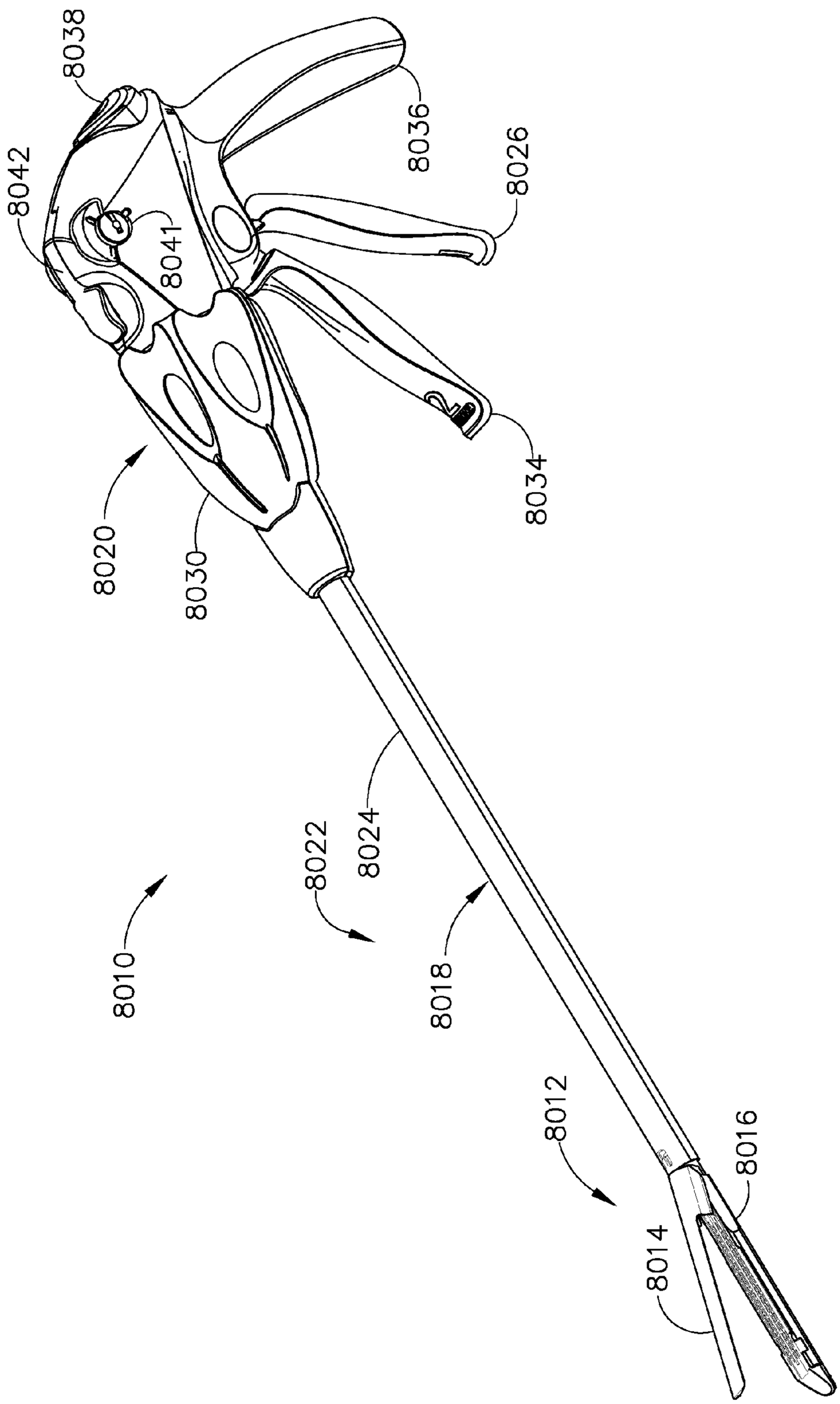
8038
8042
8041
8036
8026
8034
8020
8030
8024
8022
8010
8018
8012
8016
8014

FIG. 1

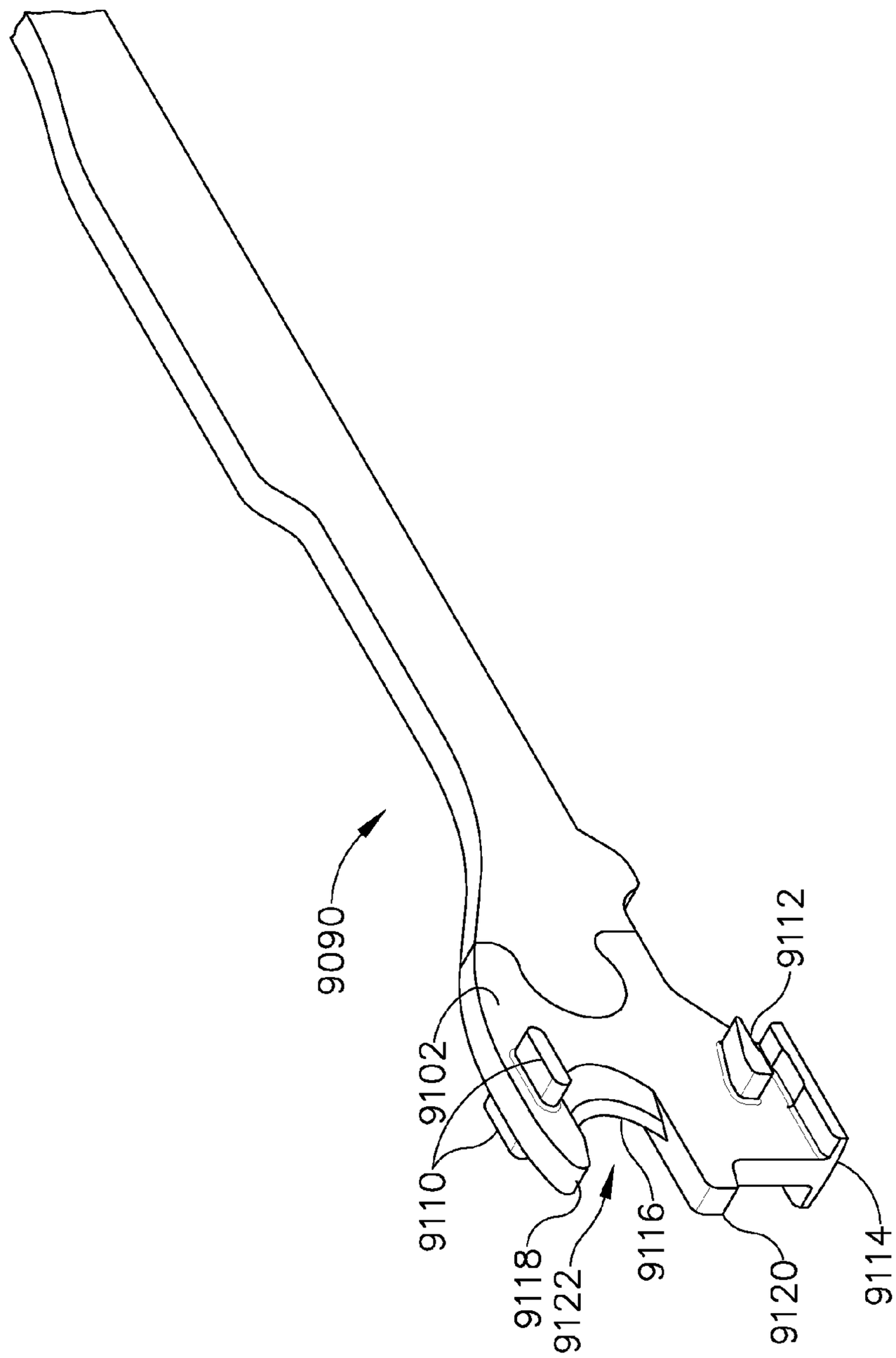
9090
9102
9110
9118
9122
9116
9120
9114
9112

FIG. 3

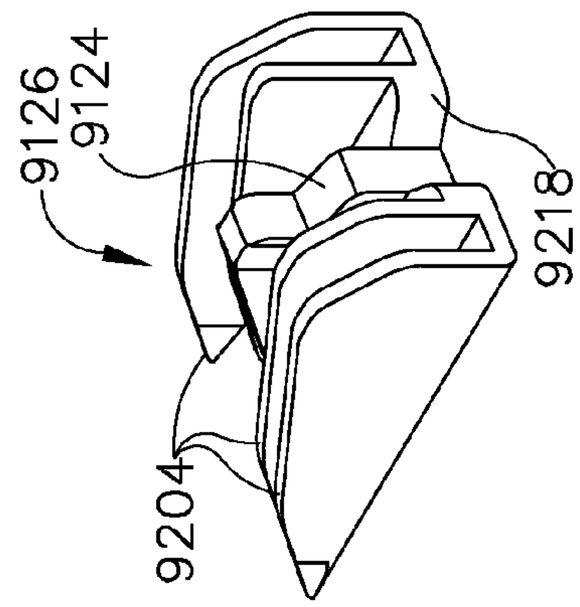
9126
9124
9218
9204

FIG. 2

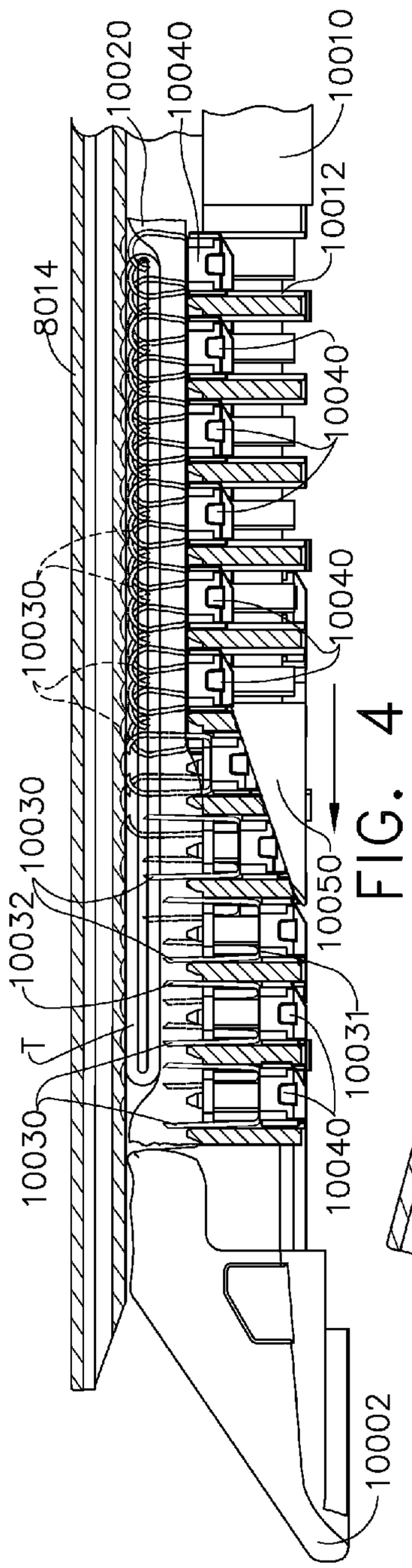
10020
10040
10010
10012
8014
10040
10030
10040
10050
10032
10030
T
10031
10030
10040
10002

FIG. 4

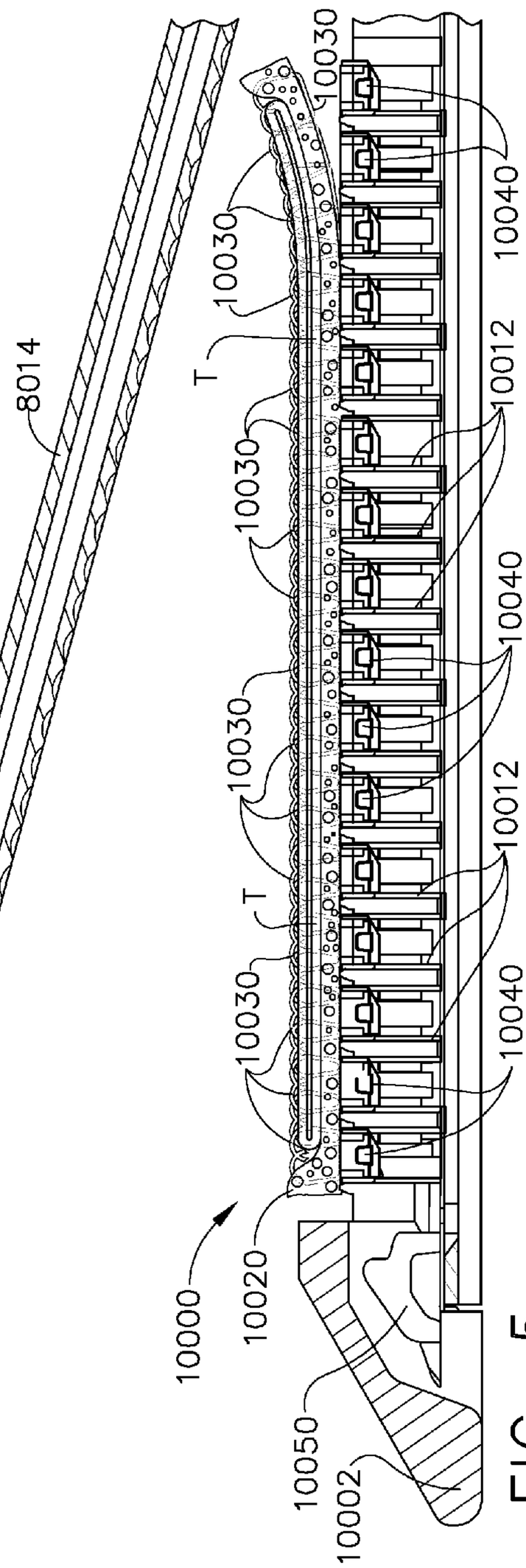
10030
10040
8014
10030
T
10012
10030
10040
10030
10012
T
10030
10040
10000
10020
10050
10002

FIG. 5

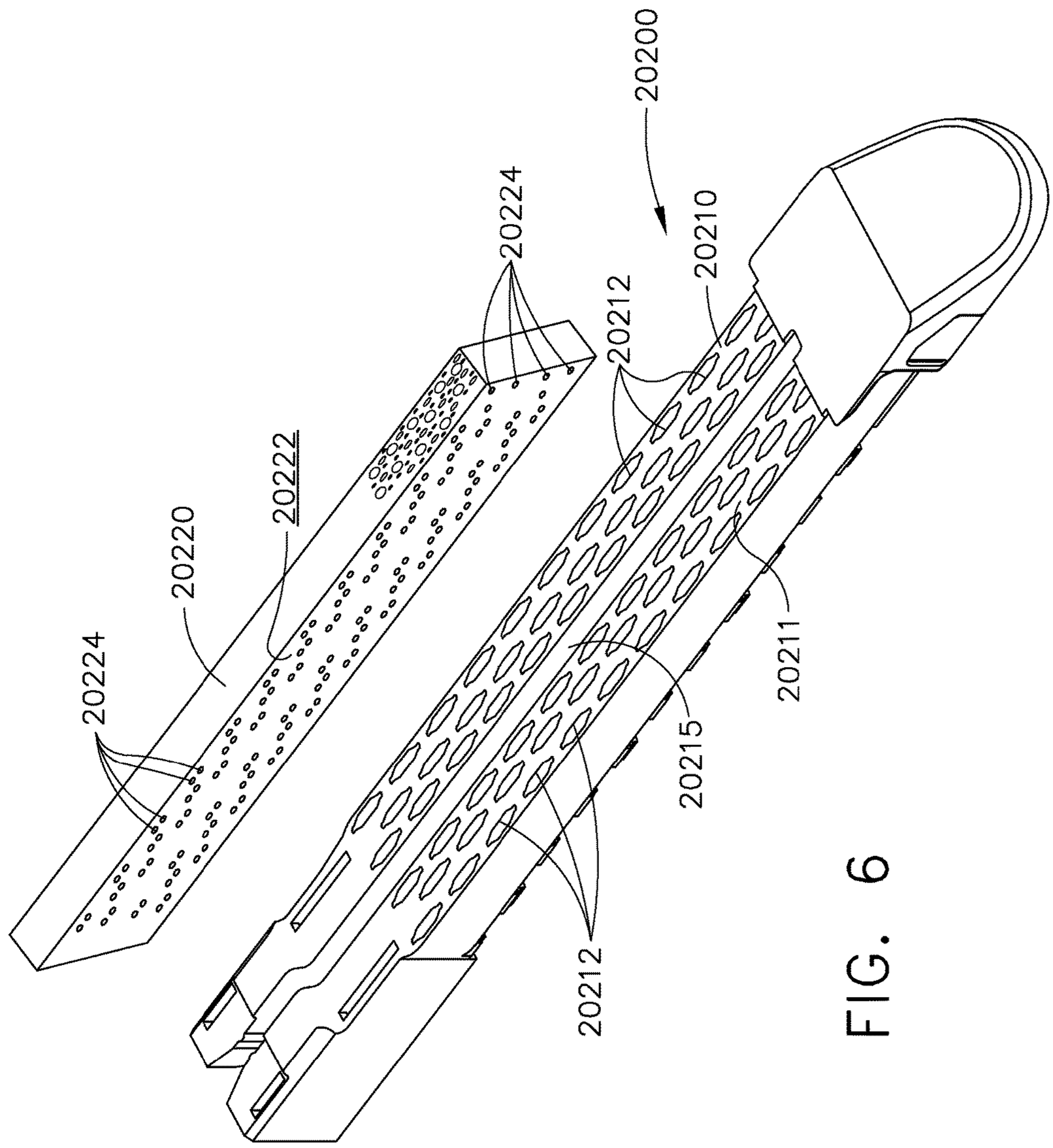
20200
20224
20210
20212
20222
20220
20224
20211
20215
20212

FIG. 6

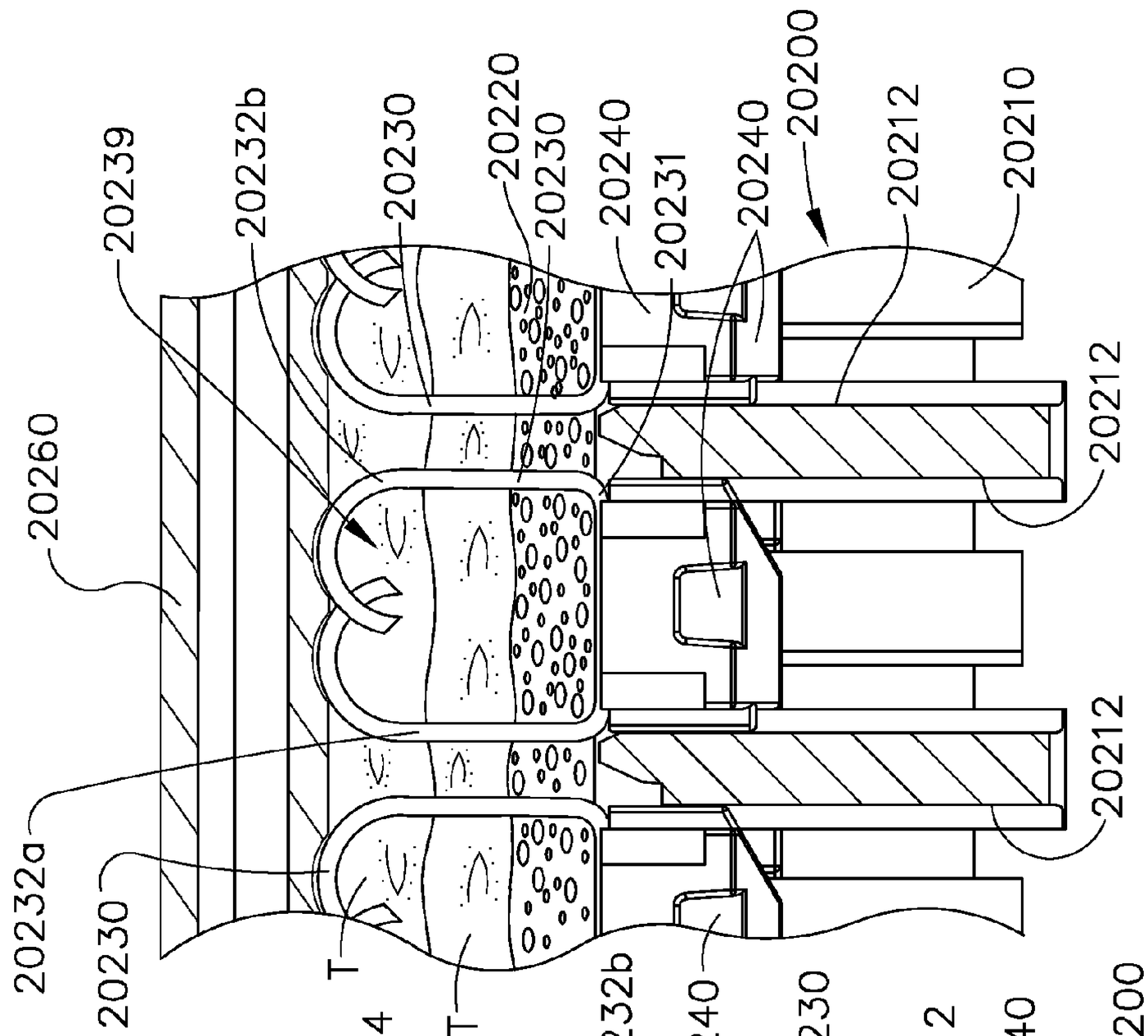
20239
20232b
20230
20220
20230
20240
20231
20240
20200
20212
20210
20260
20212
20232a
20230
T
T
20240

FIG. 8

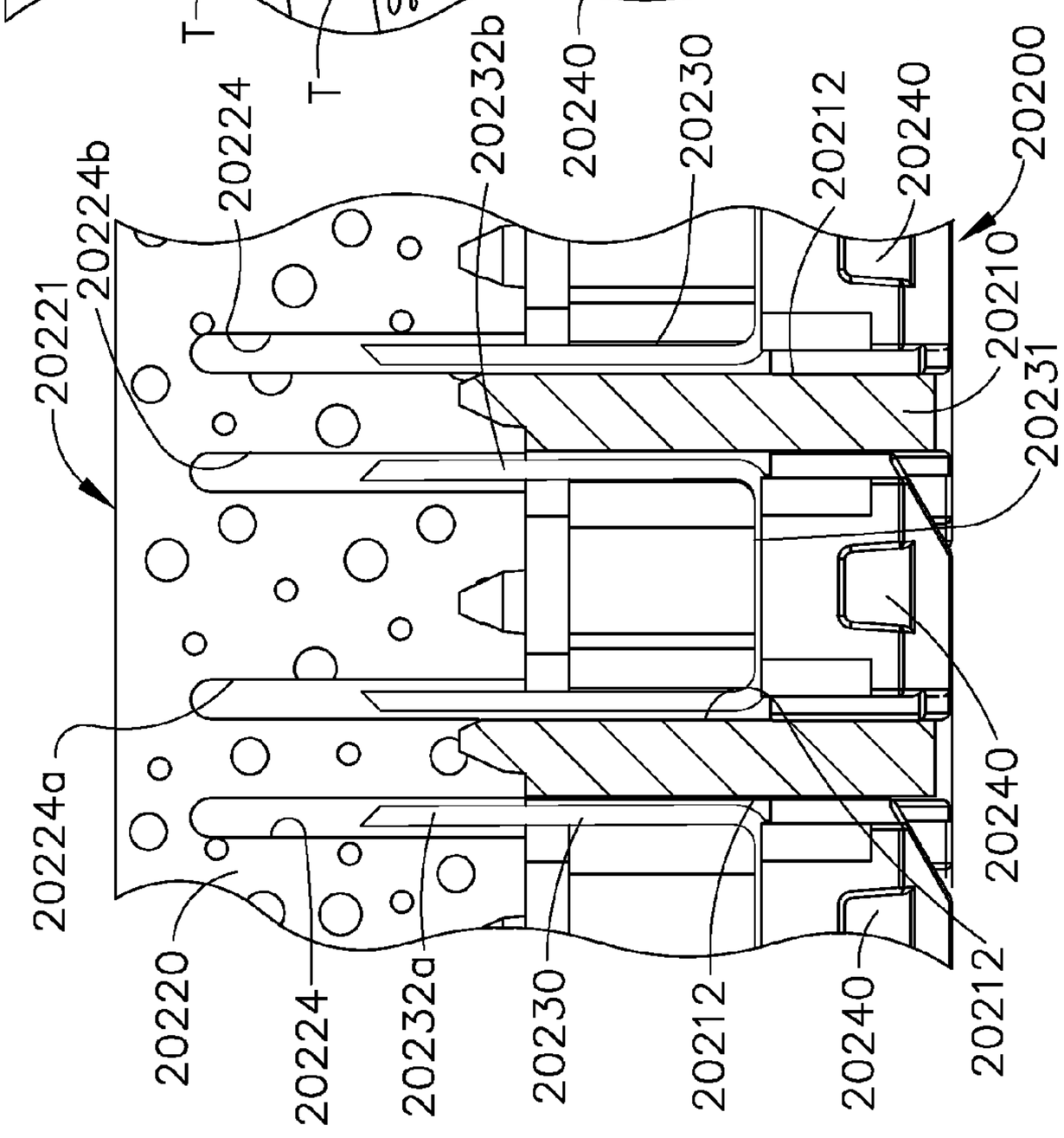
20221
20224b
20224
20232b
20240
20230
20212
20240
20200
20210
20231
20224a
20240
20220
20224
20232a
20230
20212
20240
20212

FIG. 7

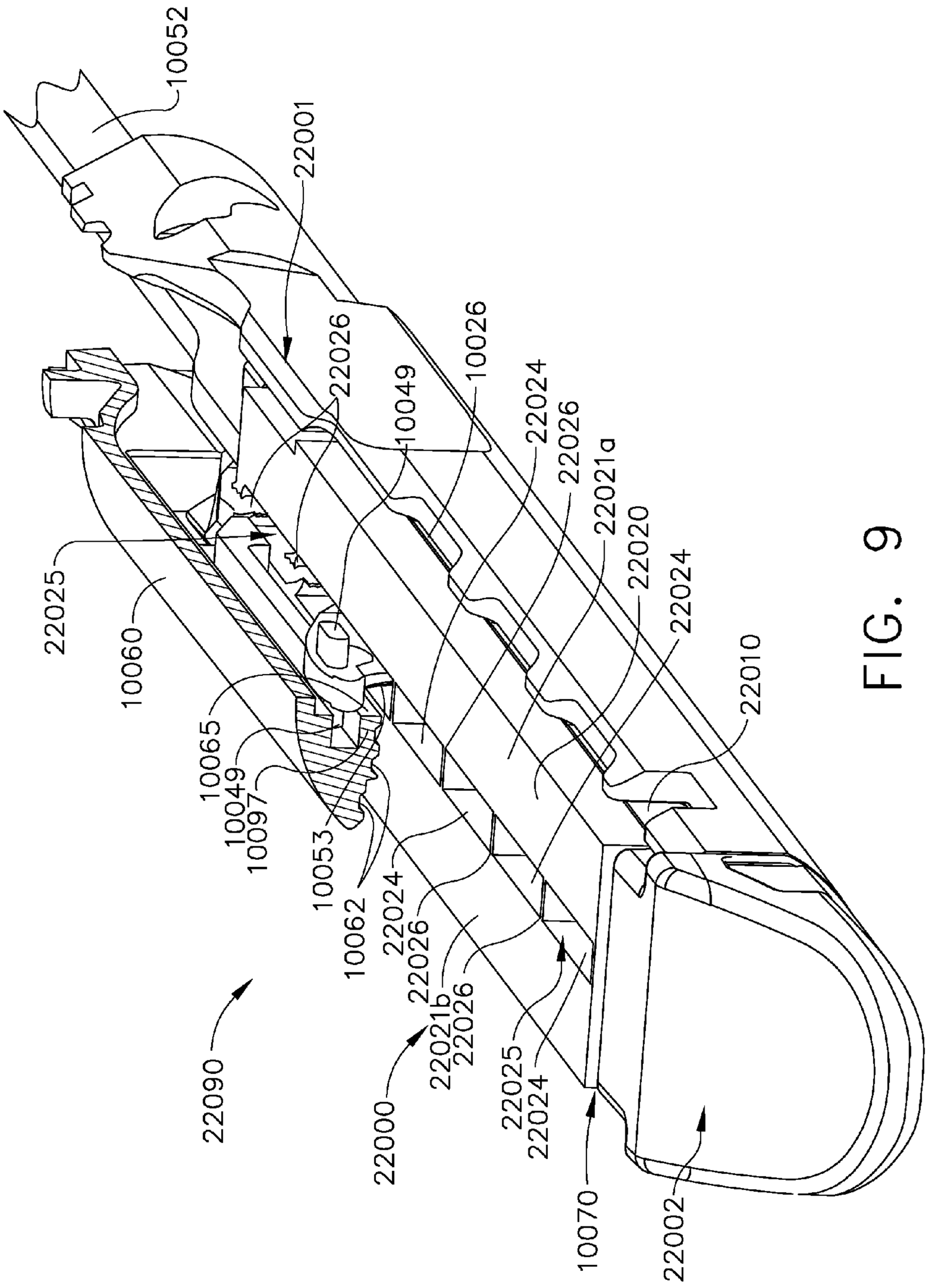
10052
22001
22026
10049
10026
22024
22026
22021a
22020
22024
22010
22025
10060
10065
10049
10097
10053
10062
22024
22026
22021b
22026
22025
22024
22090
22000
10070
22002

FIG. 9

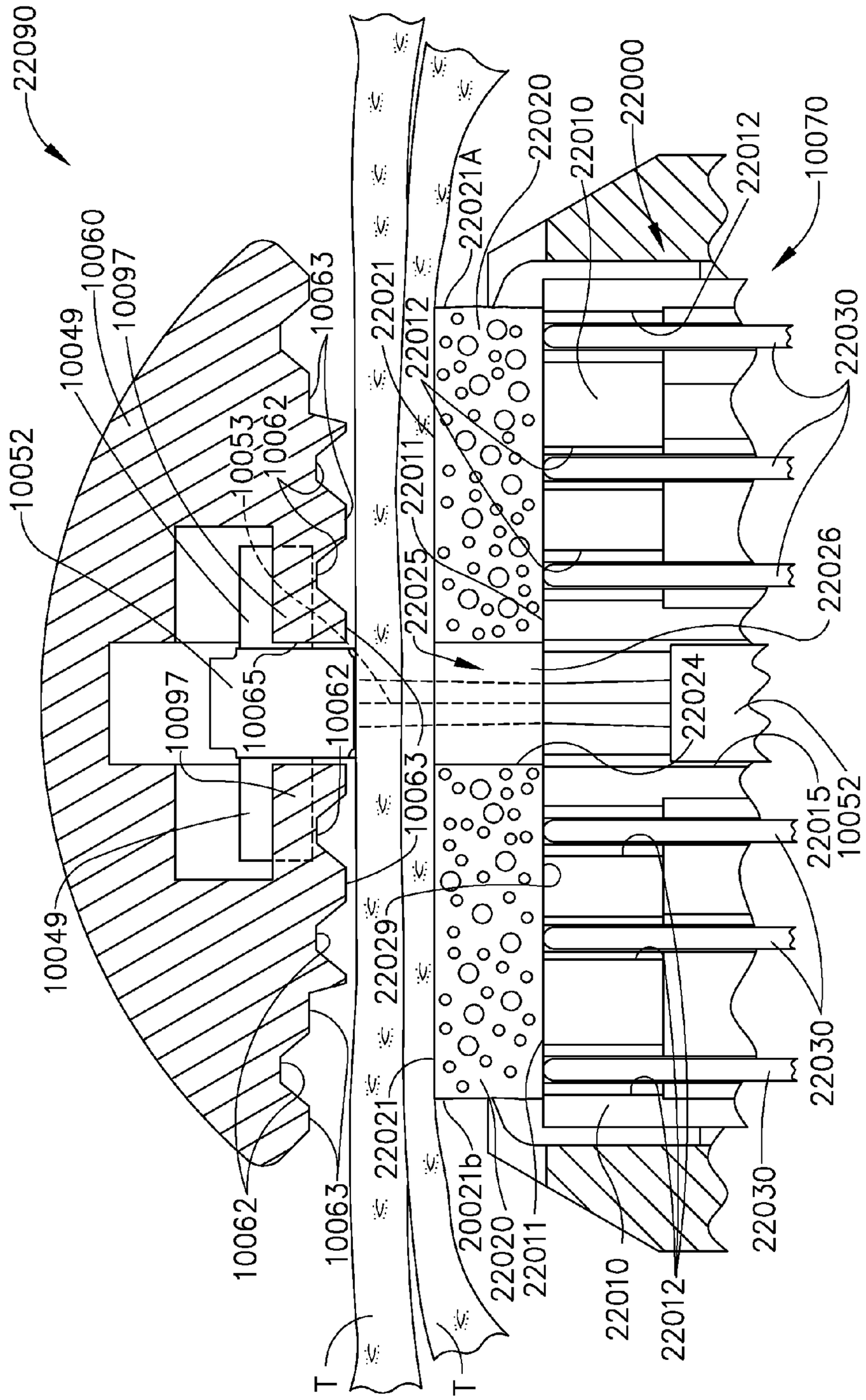
22090
10052
10049
10060
10097
10063
10053
10062
10097
10065
10062
10049
10062
10063
22021
22012
22011
22025
22029
22021
20021b
22020
22011
22010
22012
T
T
22021A
22020
22010
22000
22012
10070
22030
22026
22024
22015
10052
22030
22030

FIG. 10

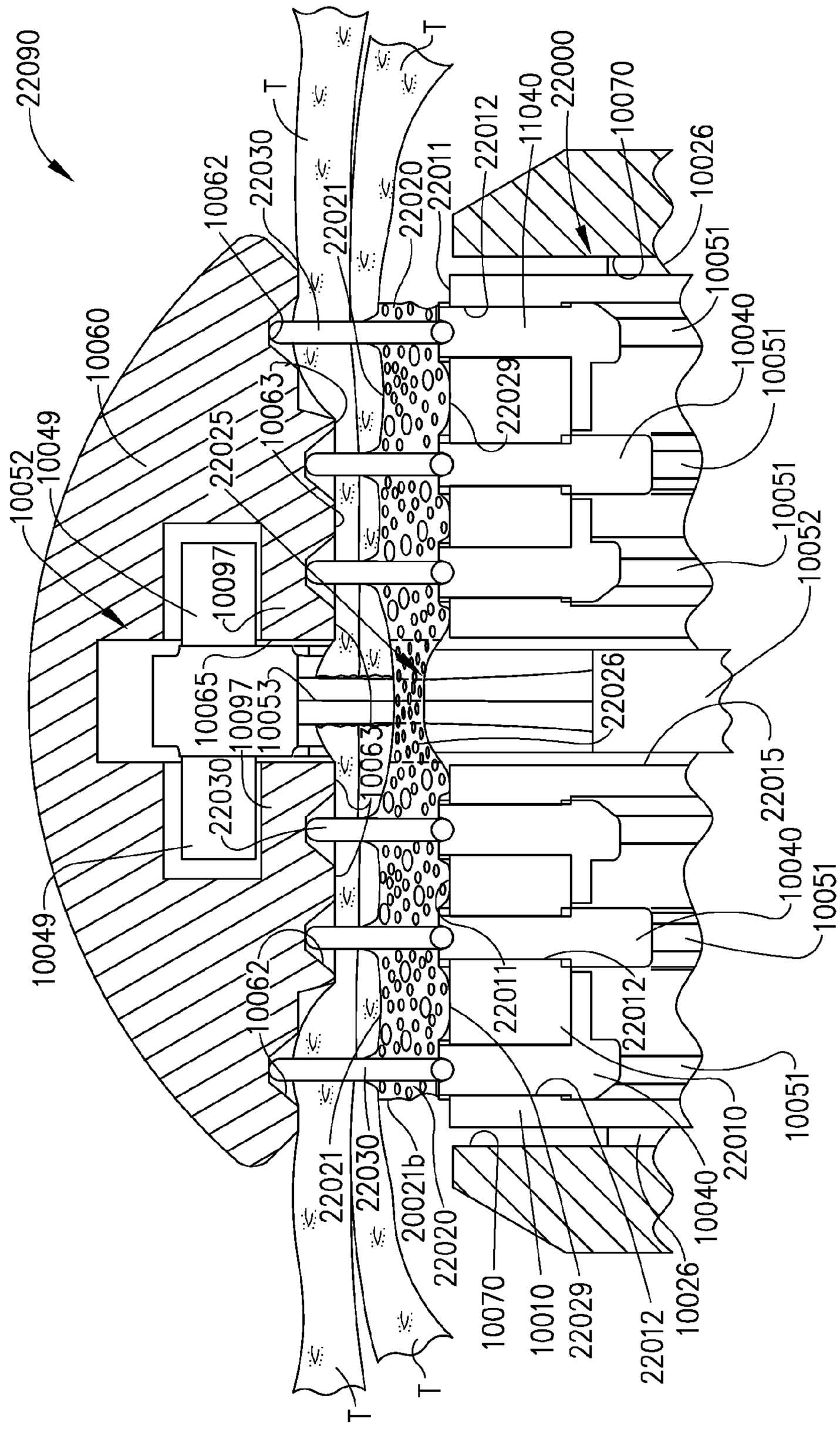
22090
10062
22030
T
22021
22020
22011
22012
11040
22000
10070
10026
10051
10040
10051
10060
10063
22029
10049
10052
22025
10051
10052
10097
10065
10097
10053
22026
10063
22030
22015
10040
10051
10049
10062
22011
22012
10051
22021
22030
20021b
22020
10070
10010
22029
22012
10026
10040
22010
10051
T
T

FIG. 11

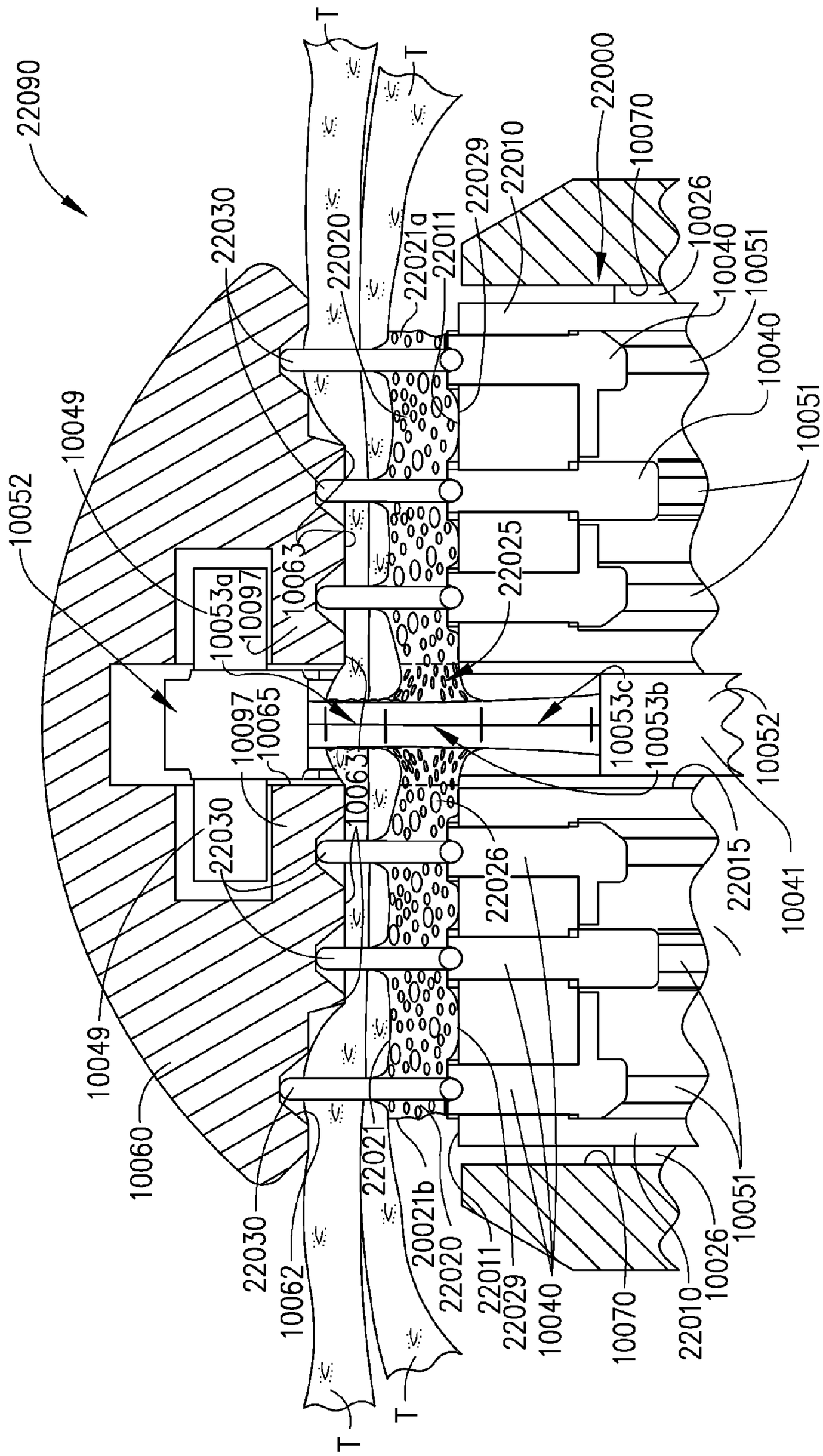
22090
T
T
22000
10070
22029
22010
22030
22020
22021a
22011
10026
10040
10051
10040
10051
10049
10052
10053a
10097
10063
22025
10097
10065
10053c
10053b
10052
10063
22030
22026
22015
10041
10049
10060
22021
22021b
22030
10062
22020
22011
22029
10040
10070
22010
10026
10051
T
T

FIG. 12

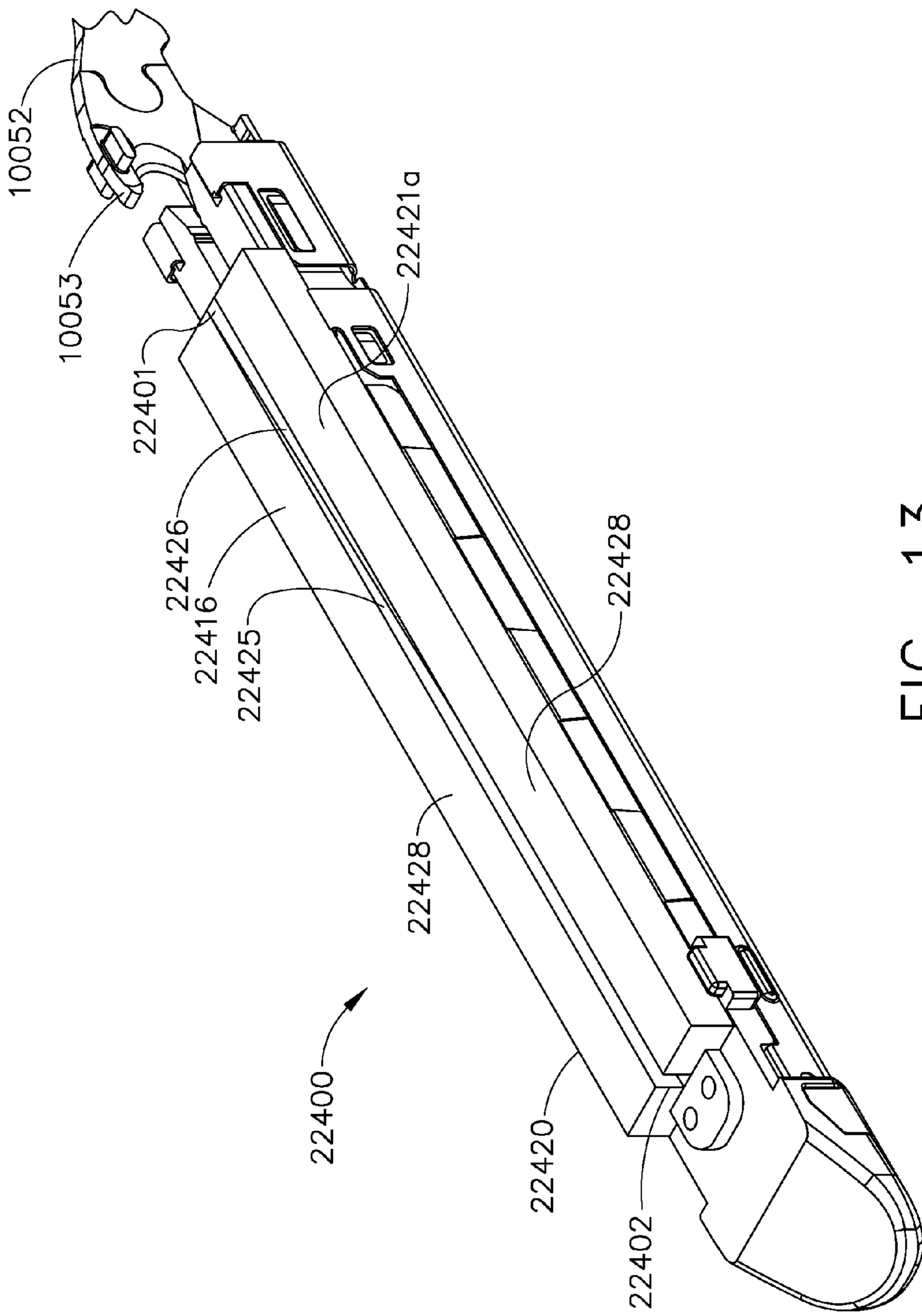
10052
10053
22401
22421a
22426
22416
22425
22428
22428
22400
22420
22402

FIG. 13

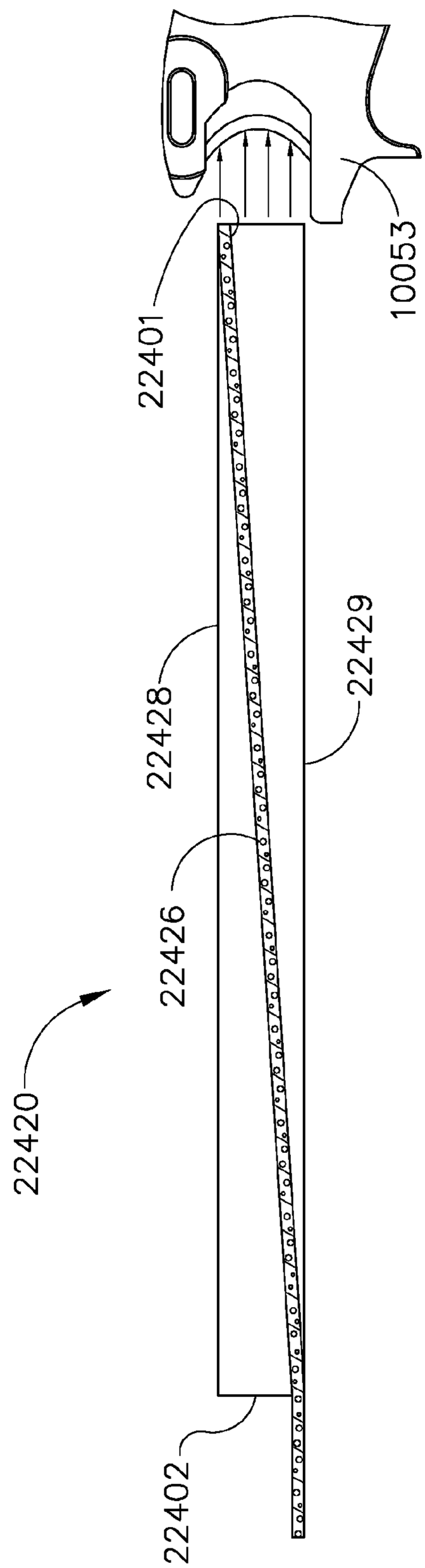

FIG. 14

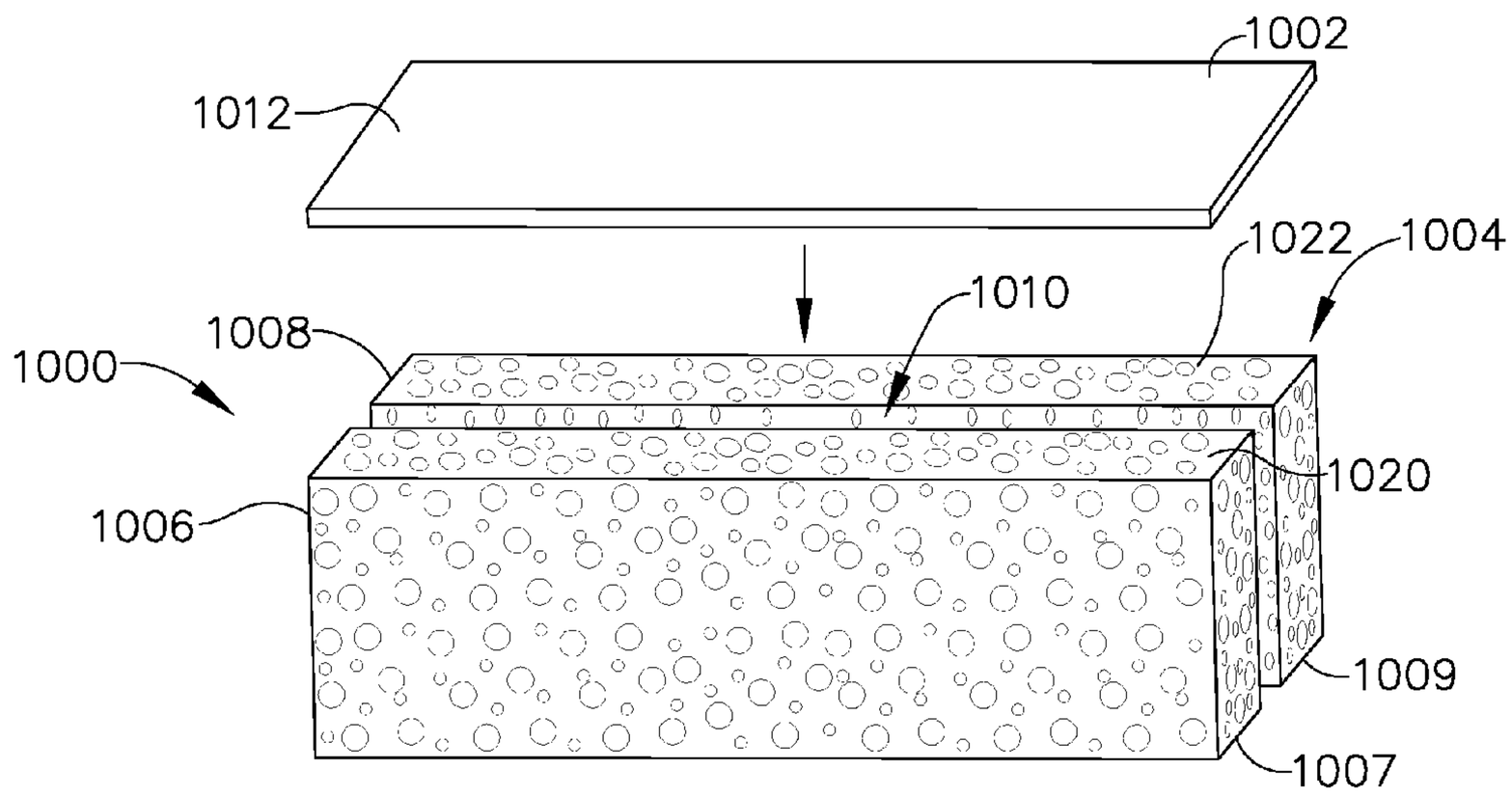

FIG. 15

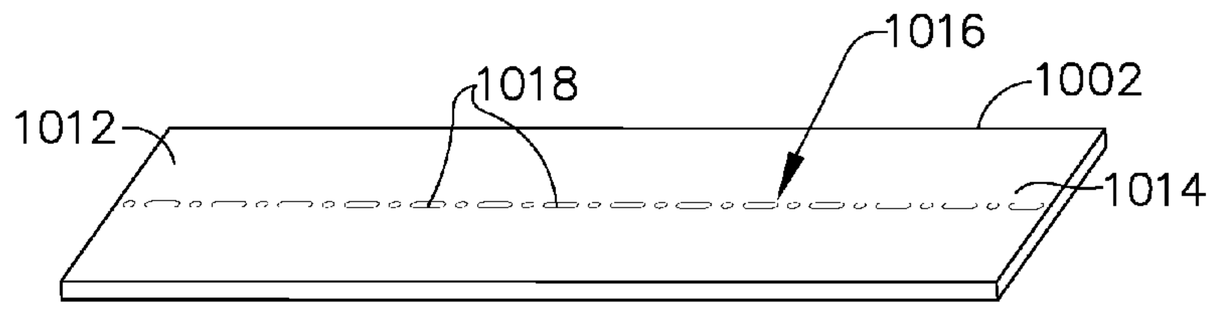

FIG. 16

FIG. 17

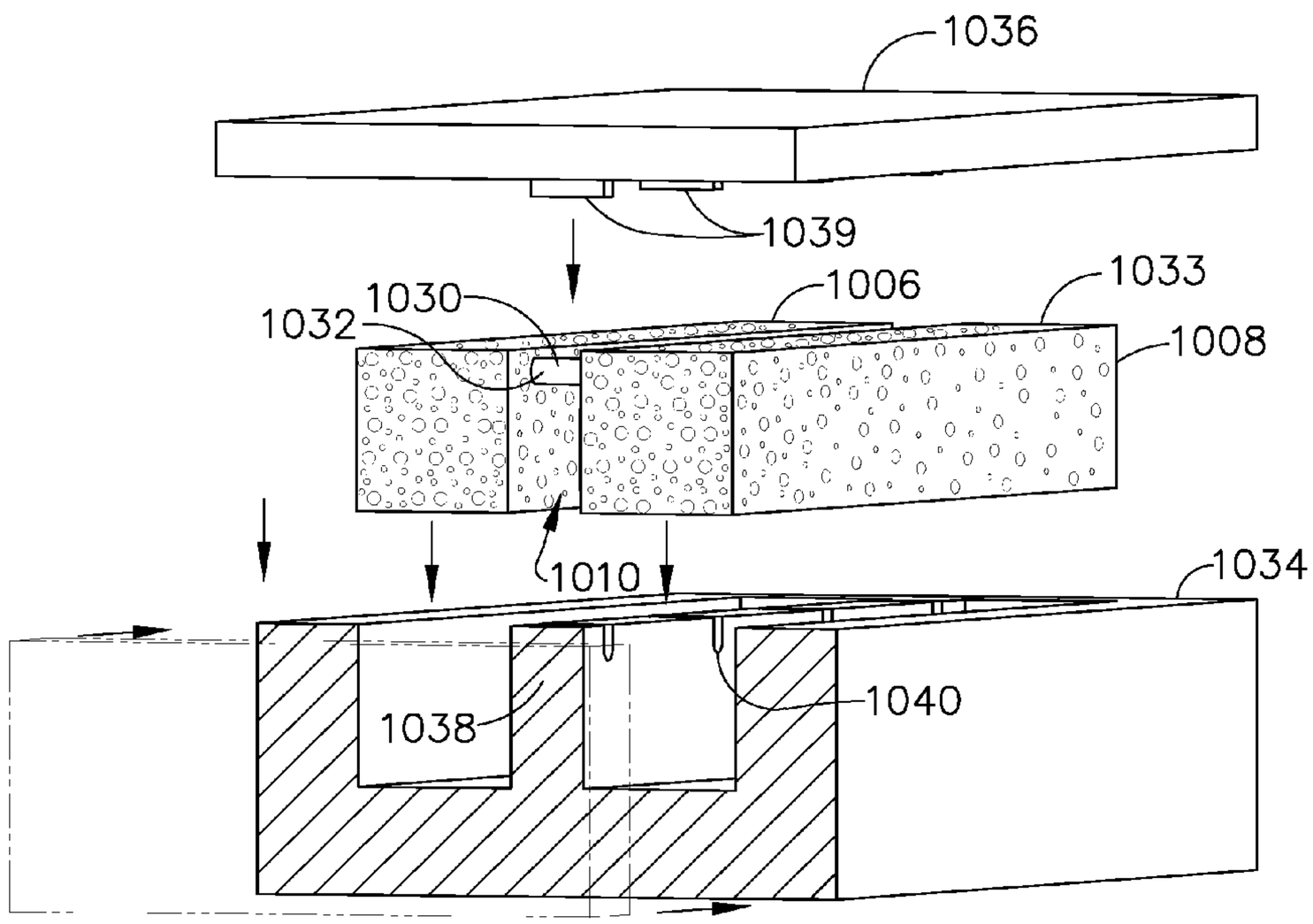
1036
1039
1006
1033
1030
1032
1008
1010
1034
1038
1040

FIG. 18

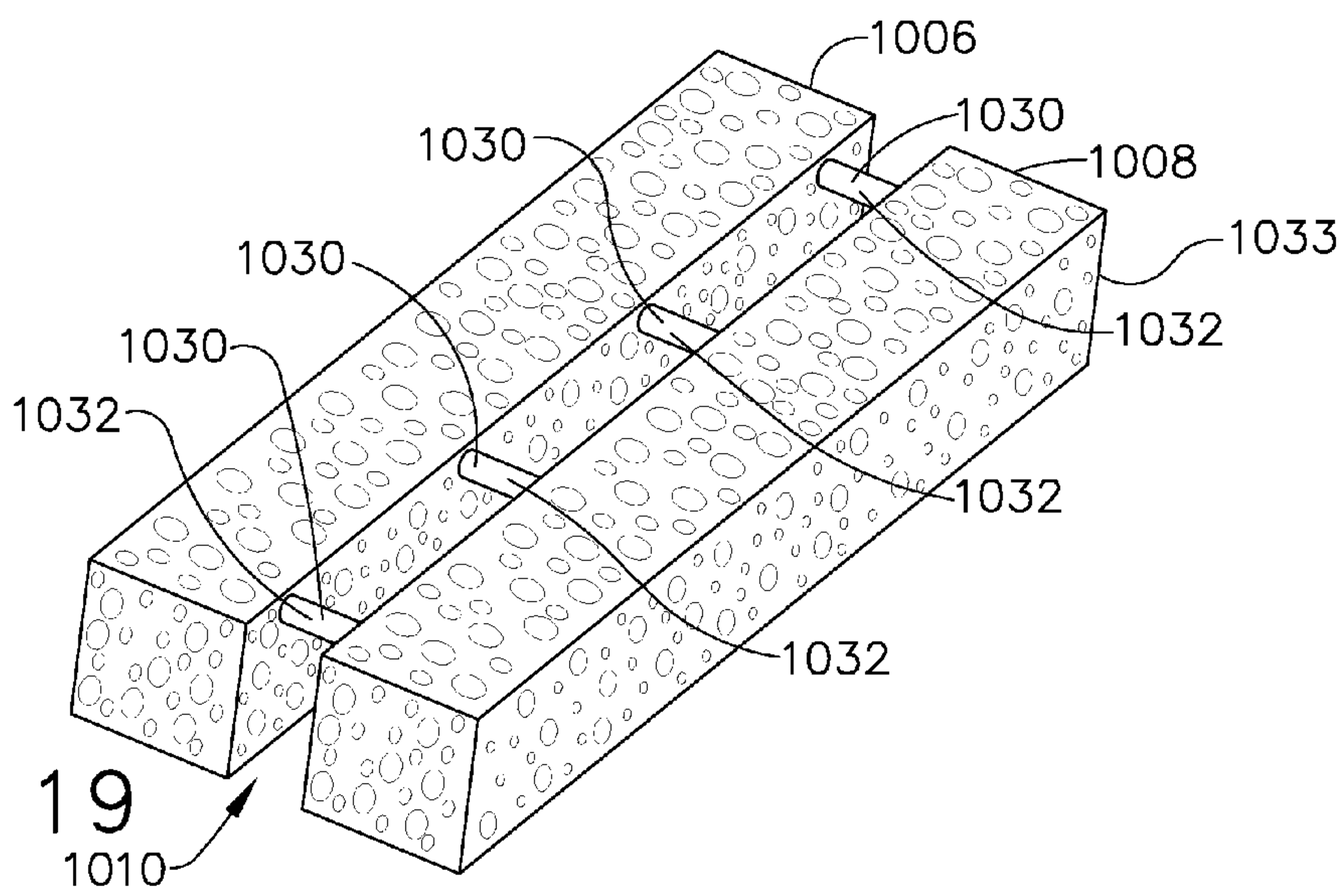
1006
1030
1030
1008
1030
1033
1032
1030
1032
1032
1032
1010

FIG. 19

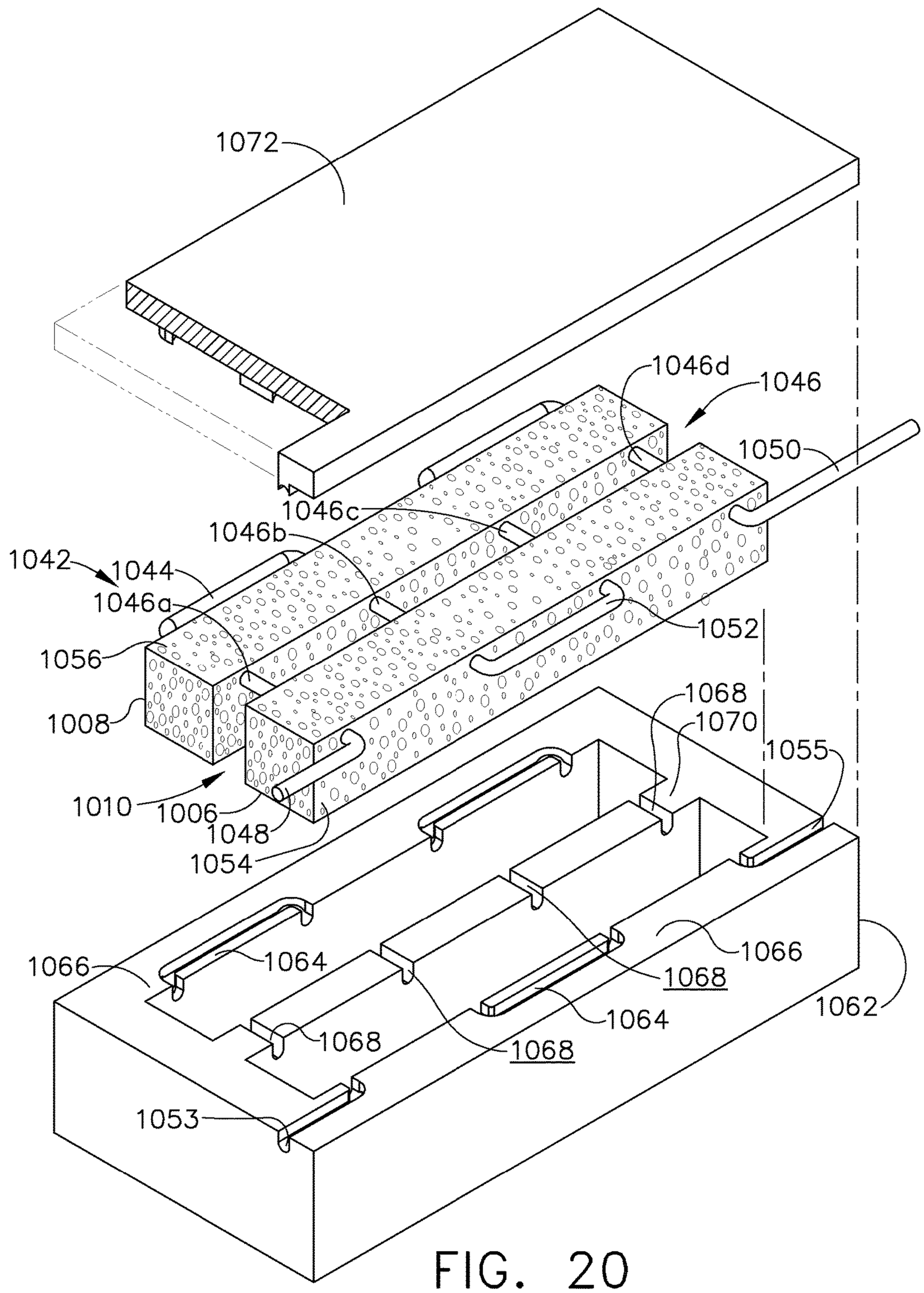
1072
1046d
1046
1050
1046c
1046b
1042
1044
1046a
1056
1052
1008
1068
1070
1055
1010
1006
1048
1054
1066
1064
1068
1066
1068
1064
1062
1068
1053

FIG. 20

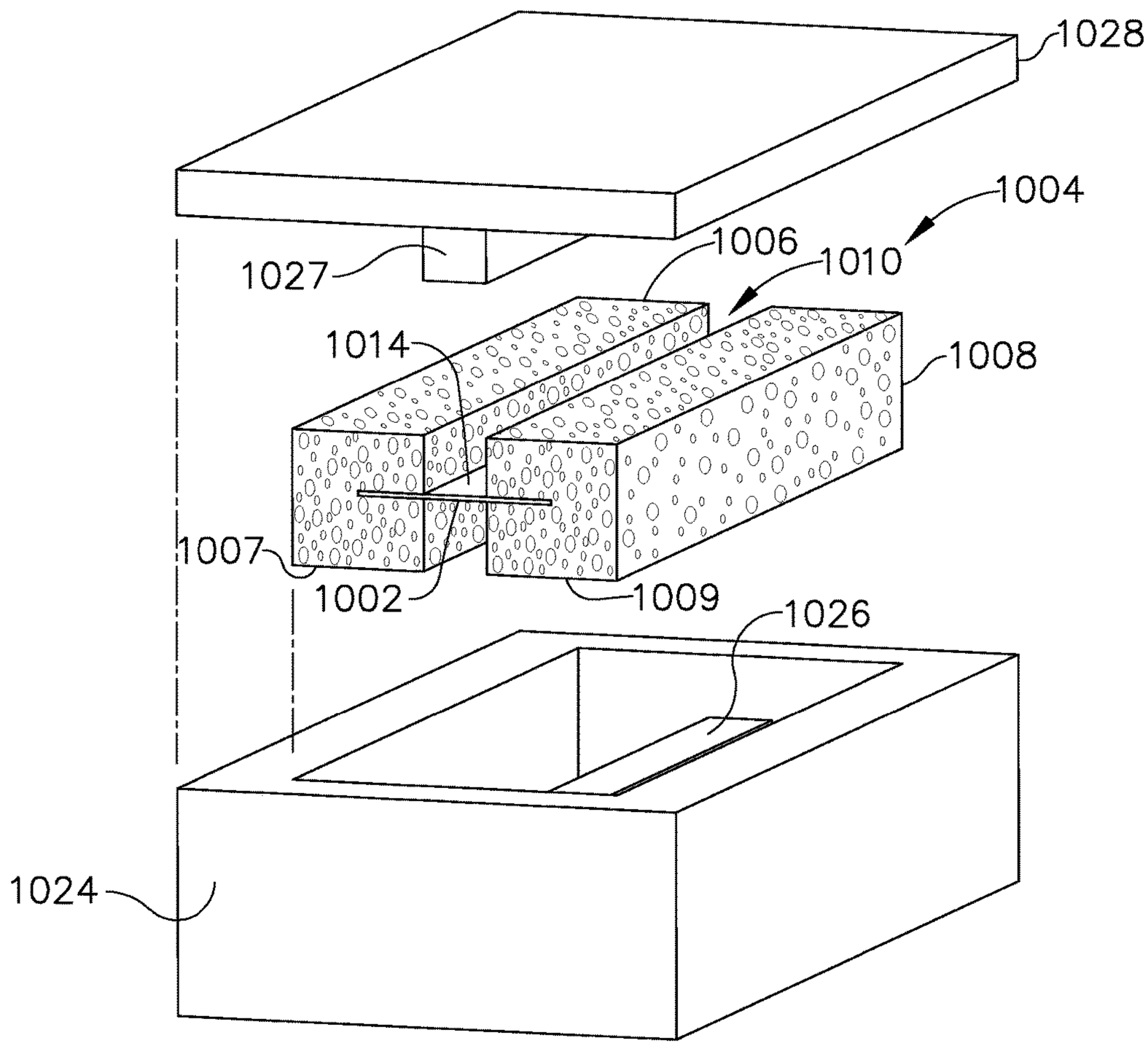
1028
1004
1006
1010
1027
1014
1008
1007
1002
1009
1026
1024

FIG. 21

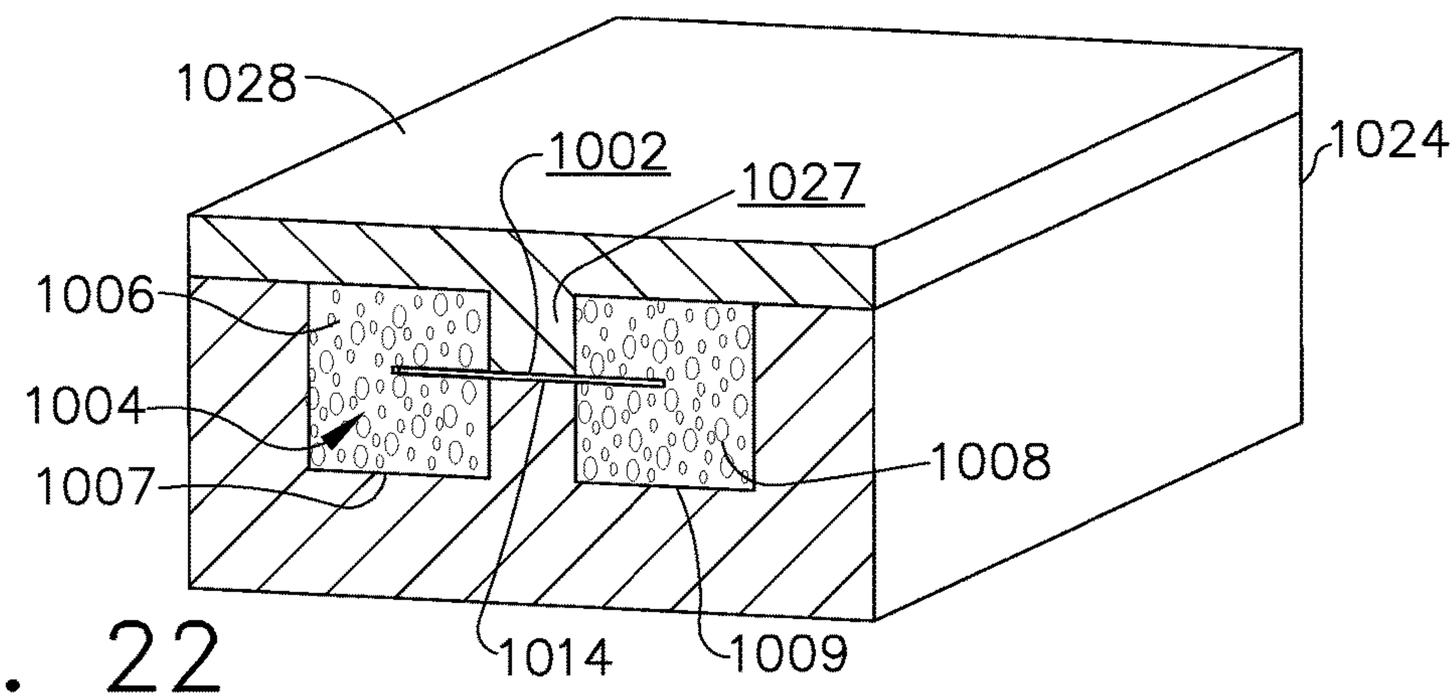
1028
1002
1027
1024
1006
1004
1007
1008
1014
1009

FIG. 22

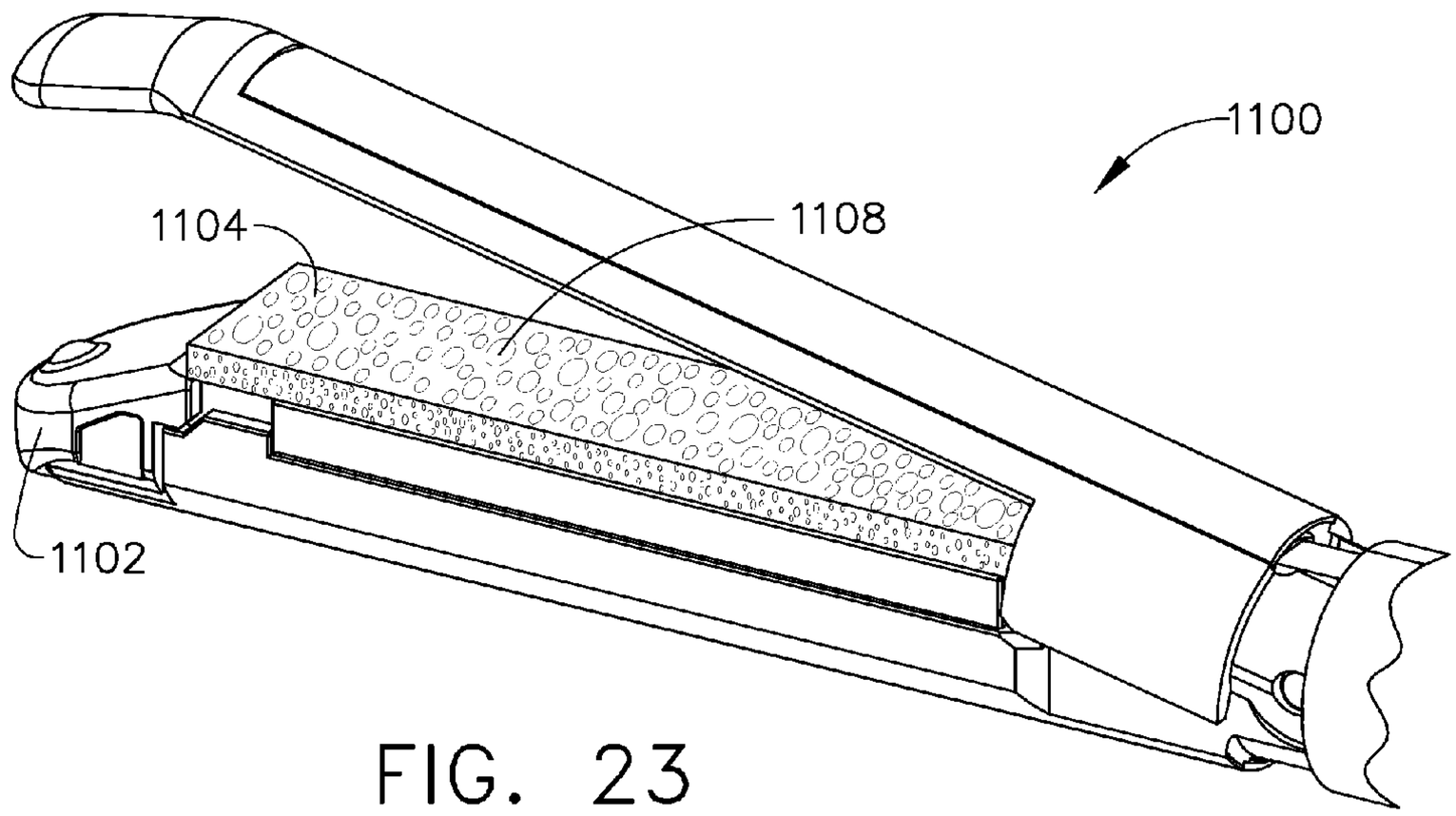

FIG. 23

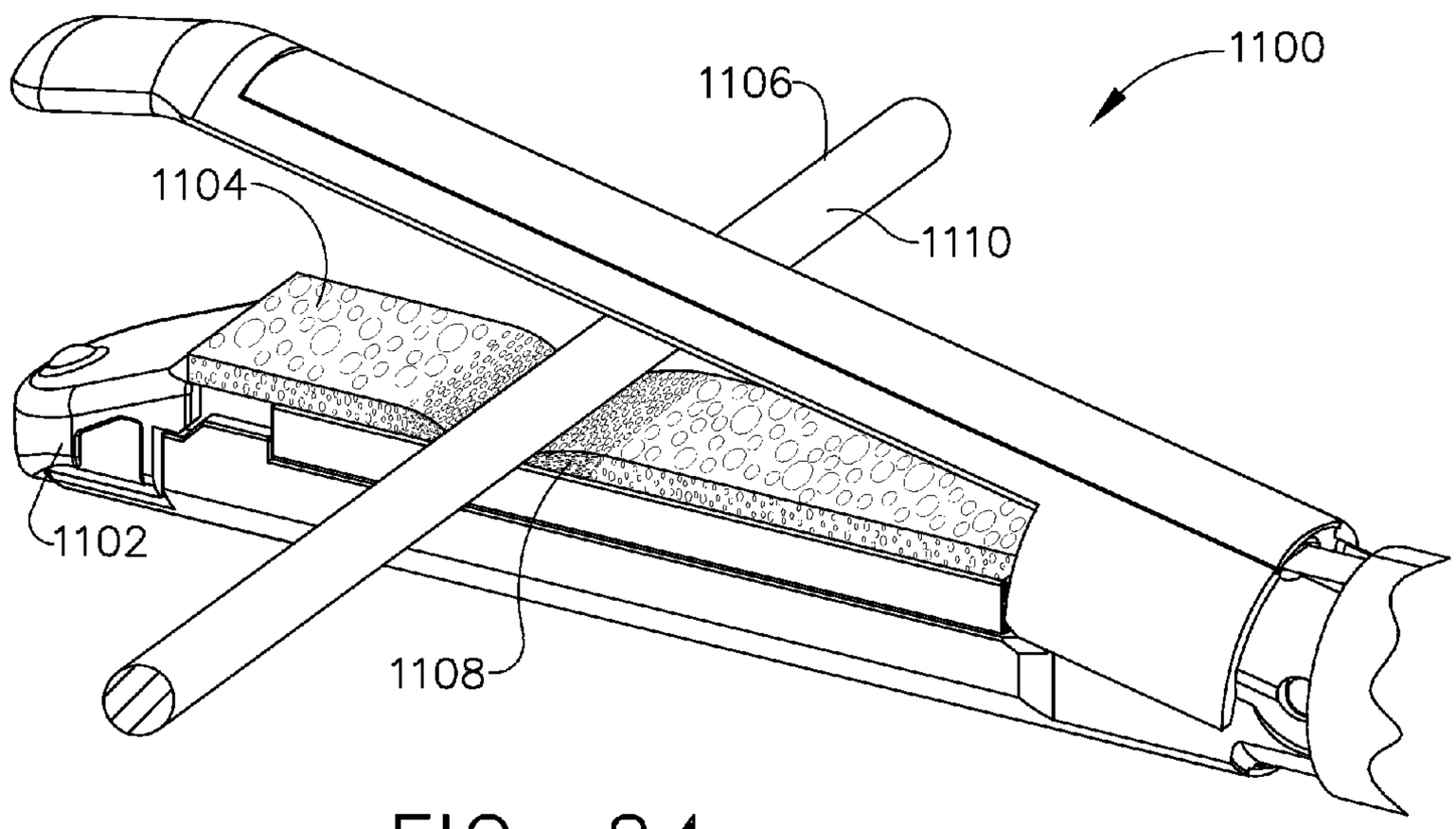

FIG. 24

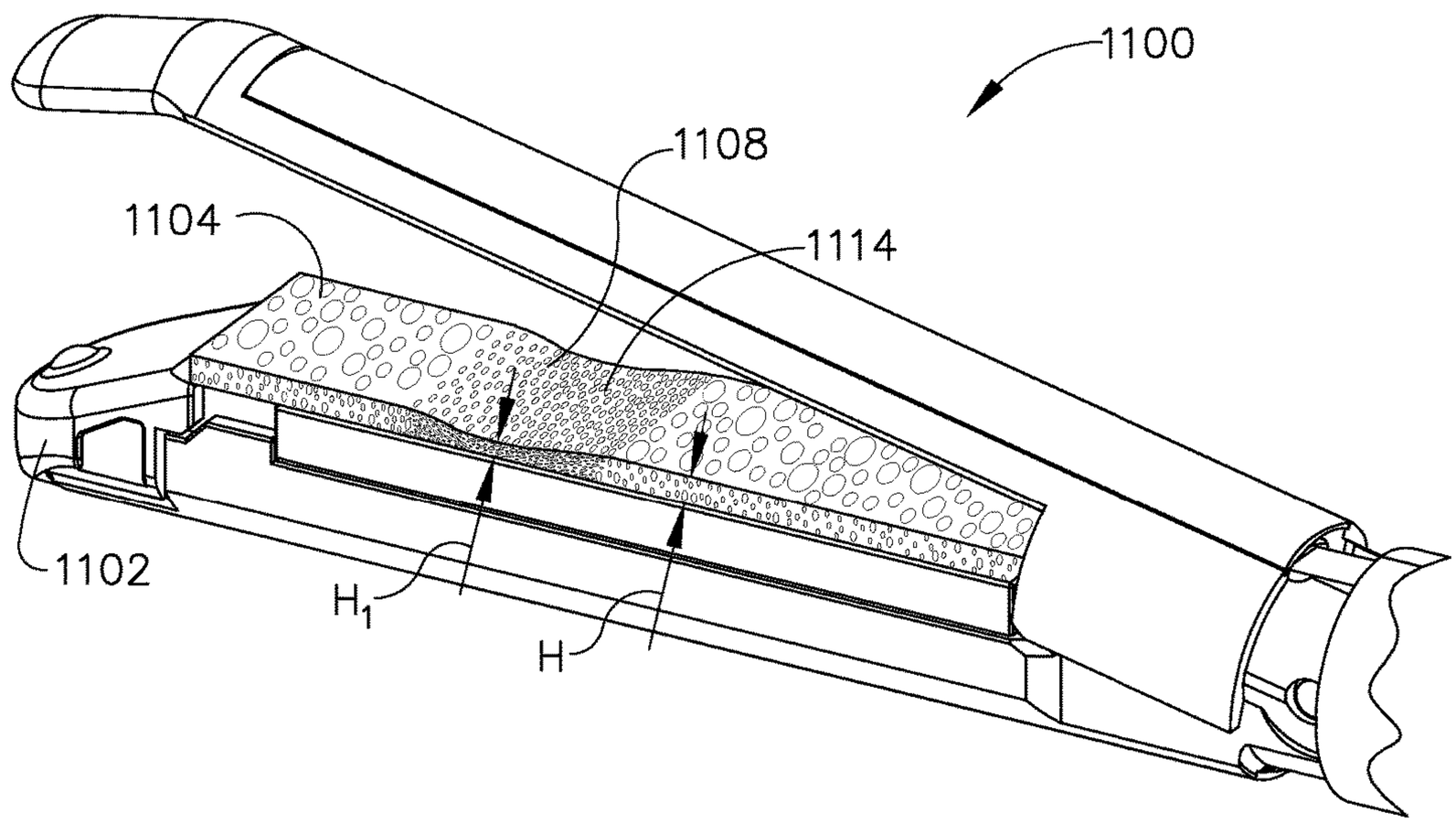

FIG. 25

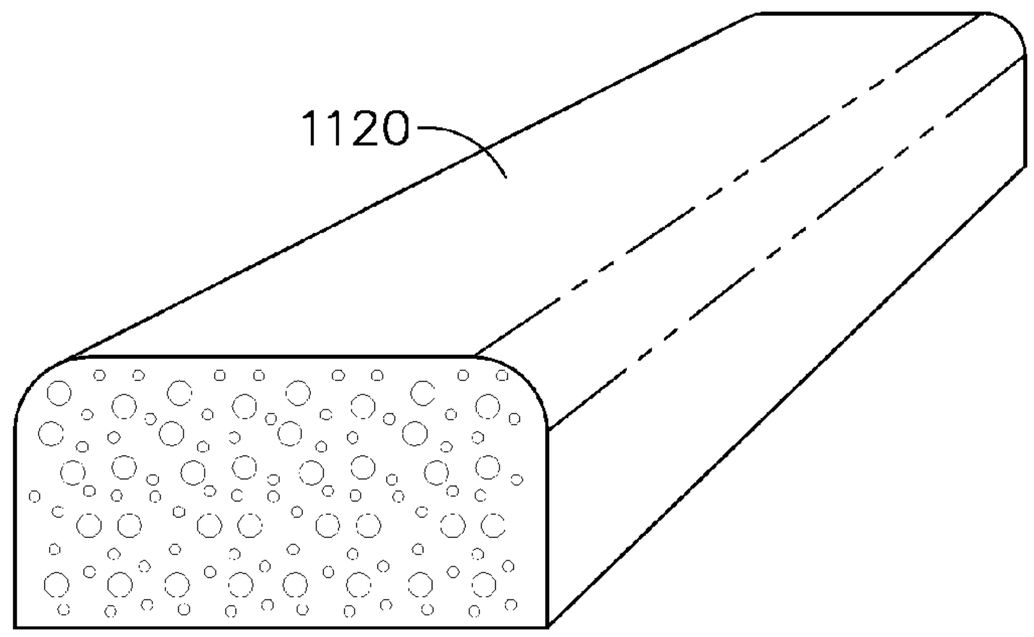

FIG. 26

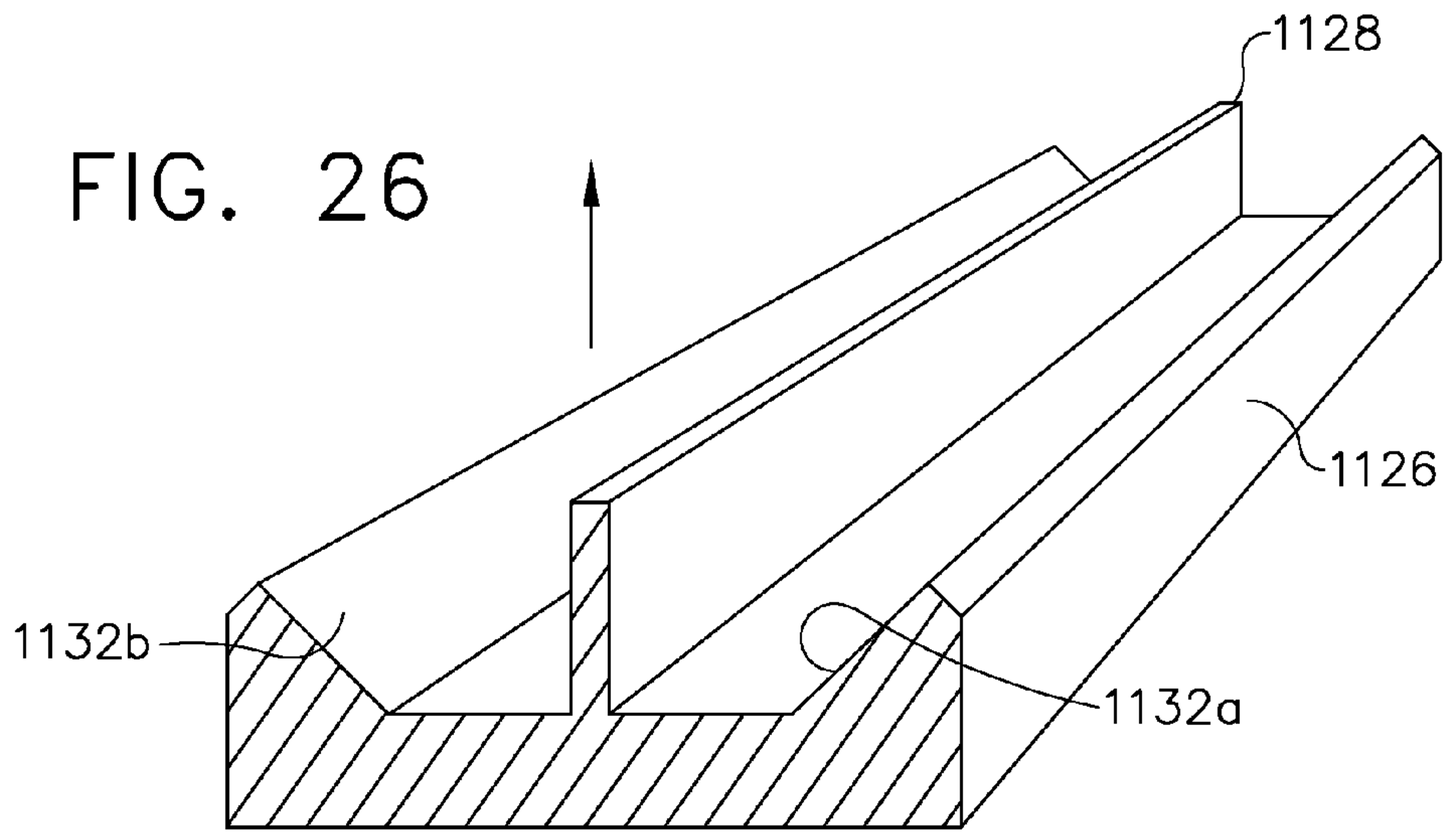

FIG. 27

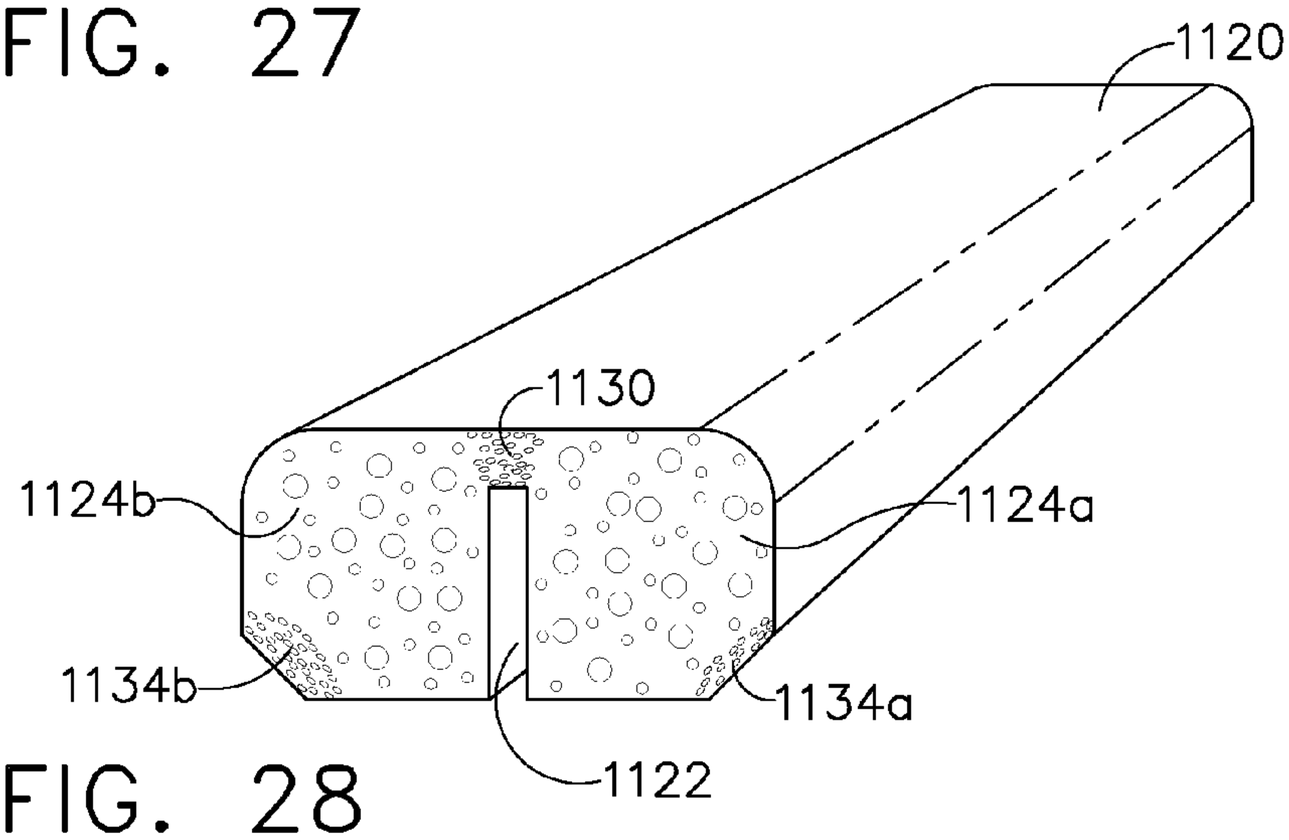

FIG. 28

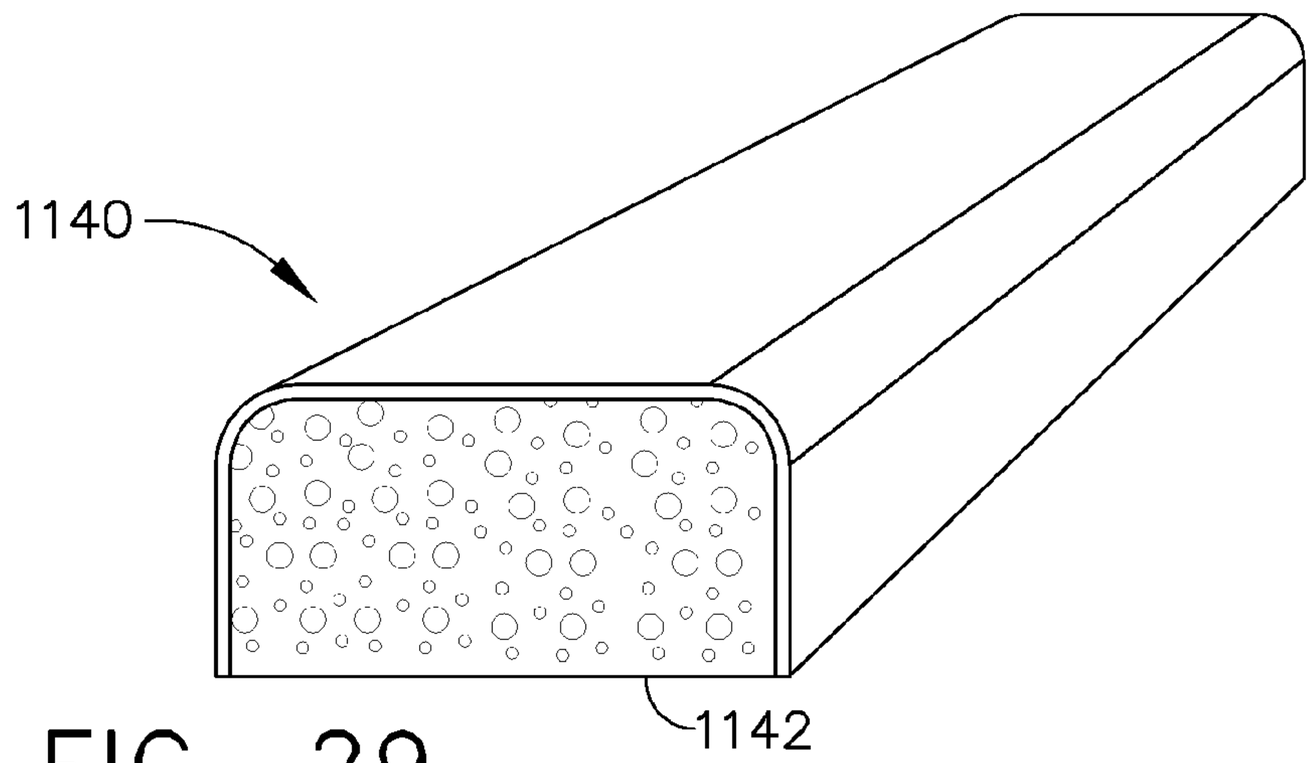

FIG. 29

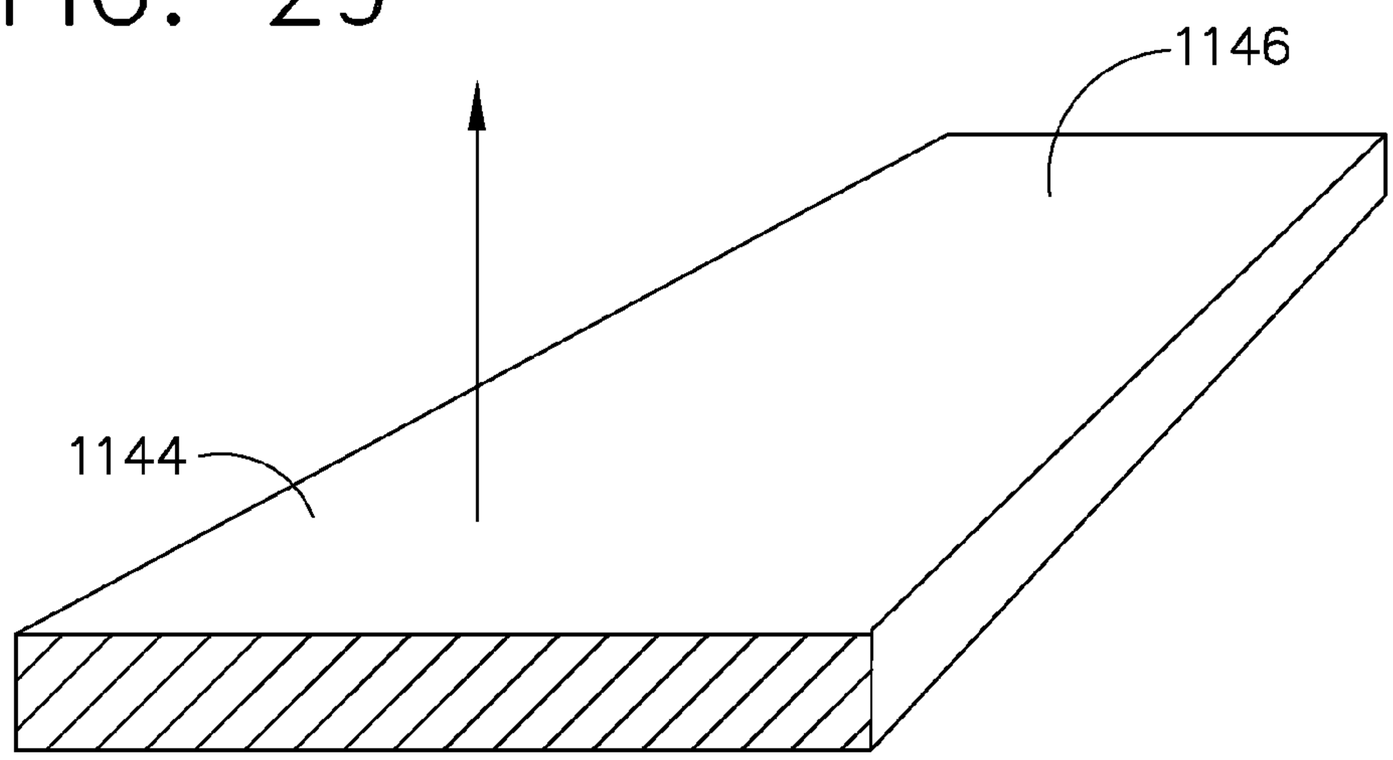

FIG. 30

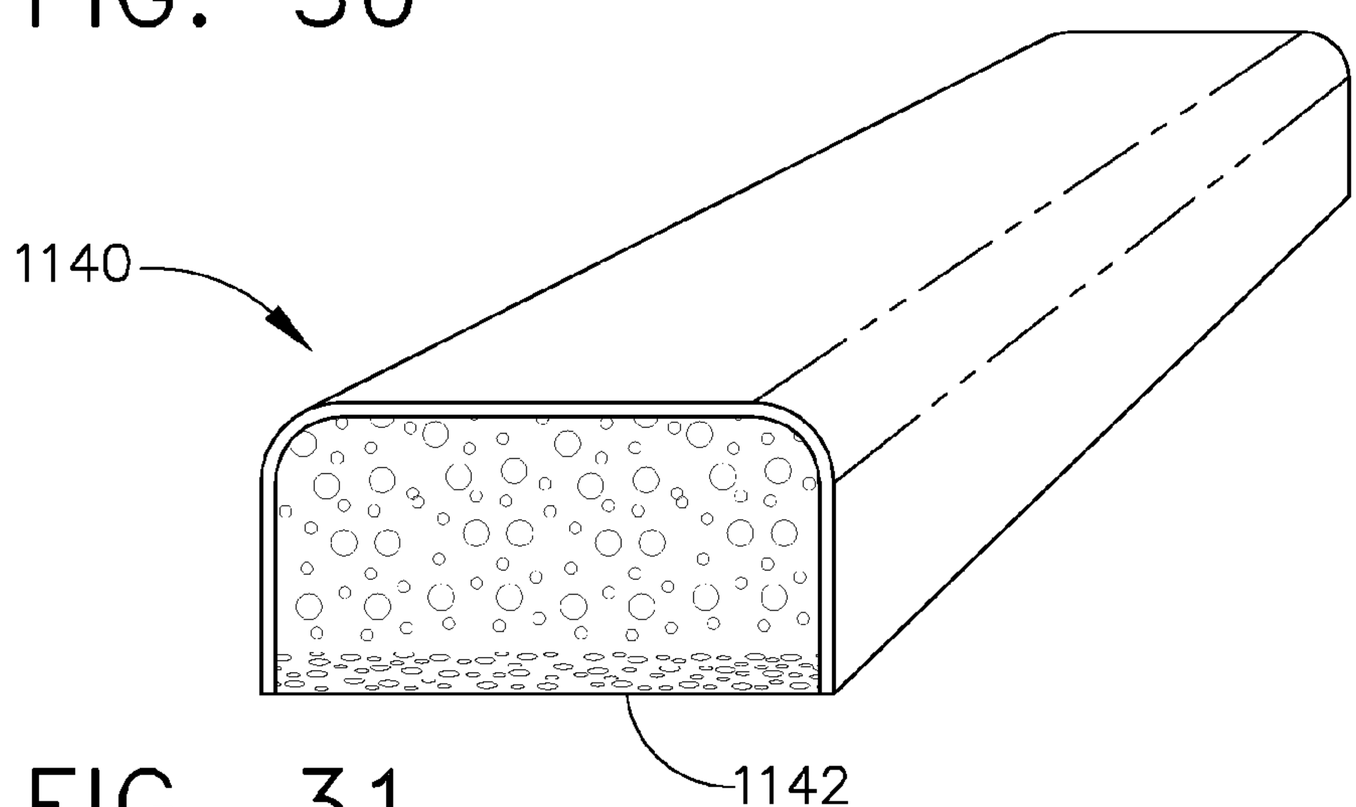

FIG. 31

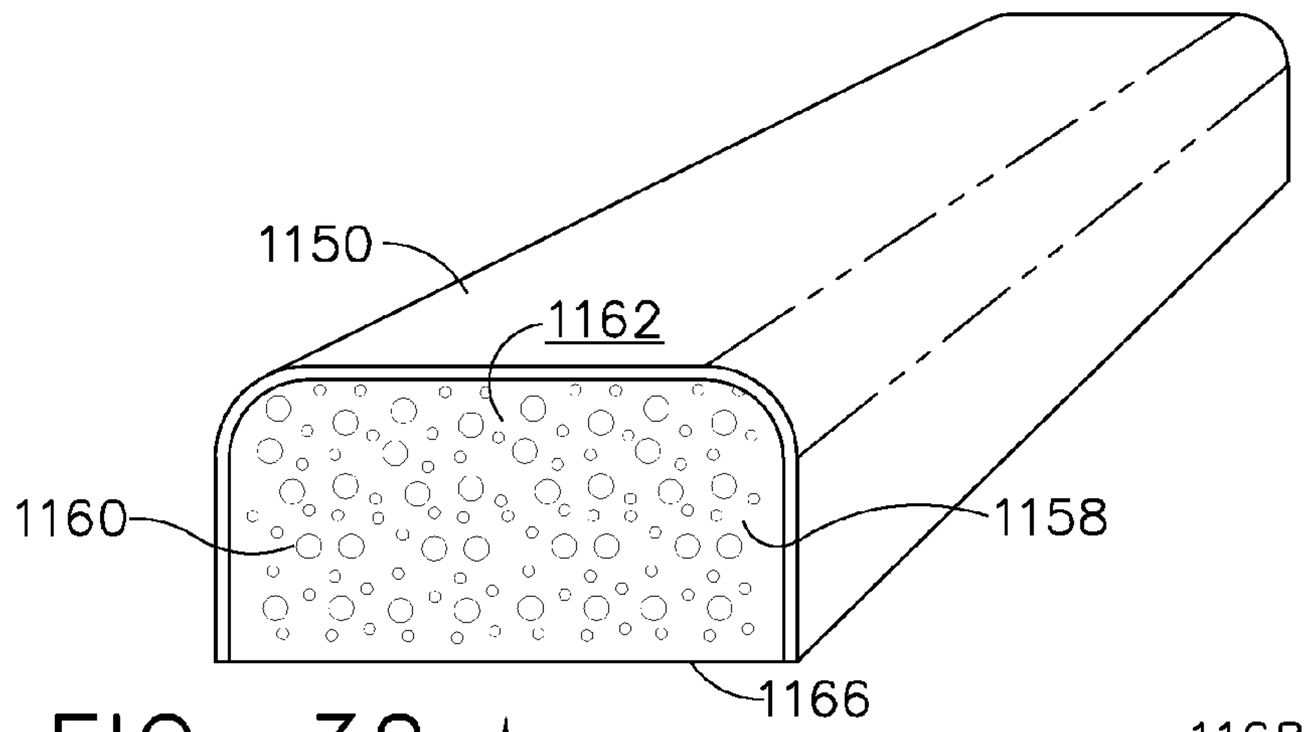

FIG. 32

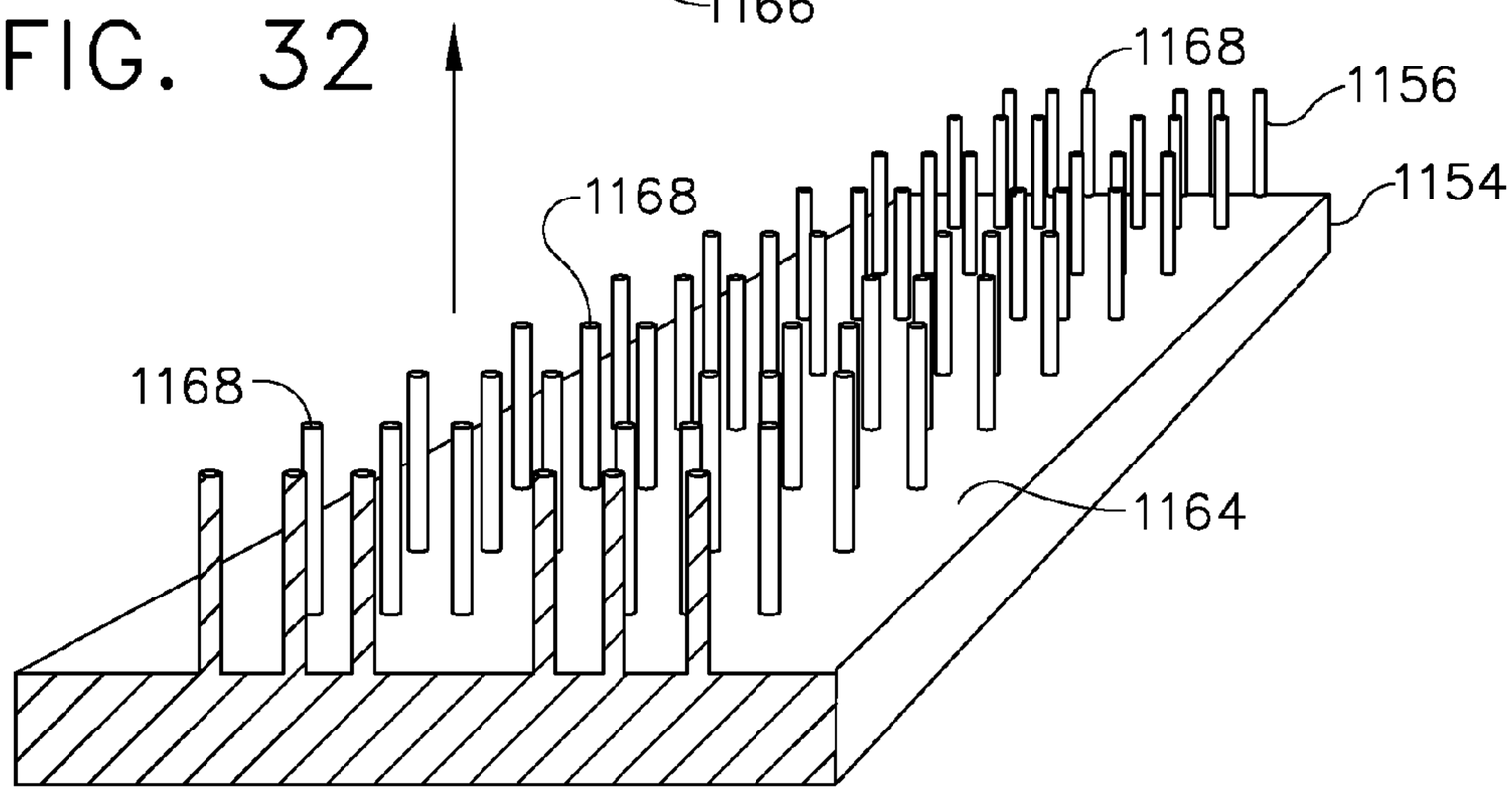

FIG. 33

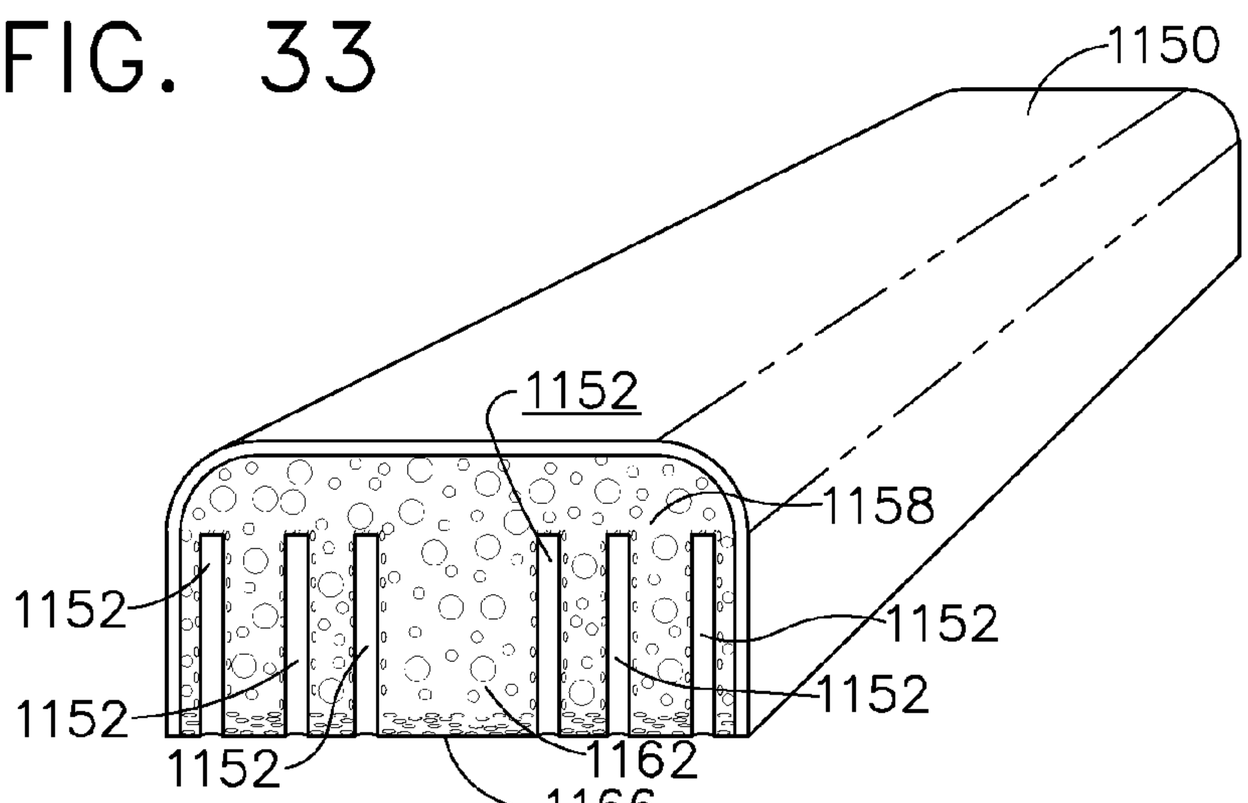

FIG. 34

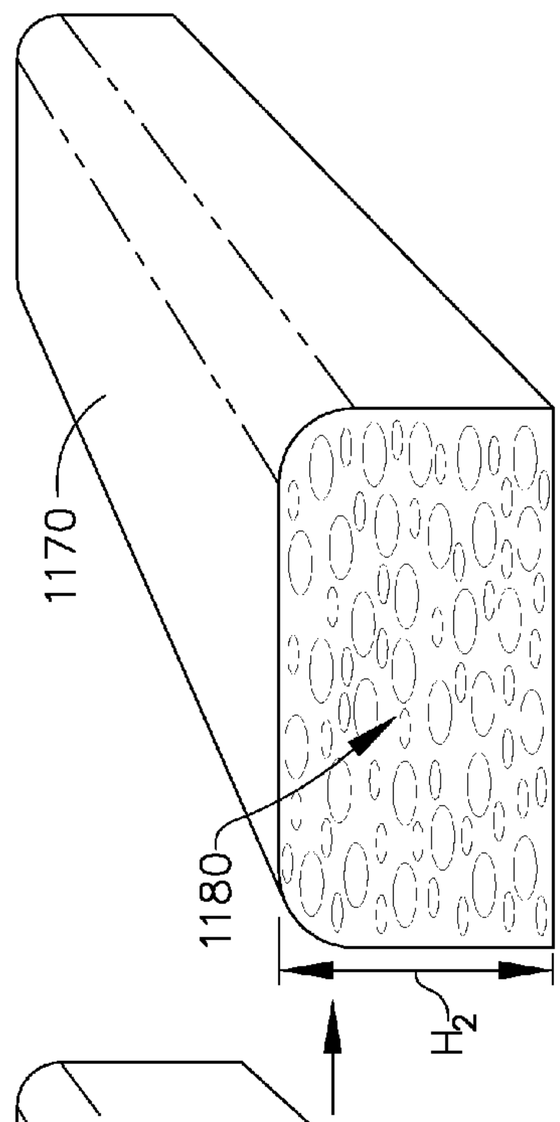

FIG. 36

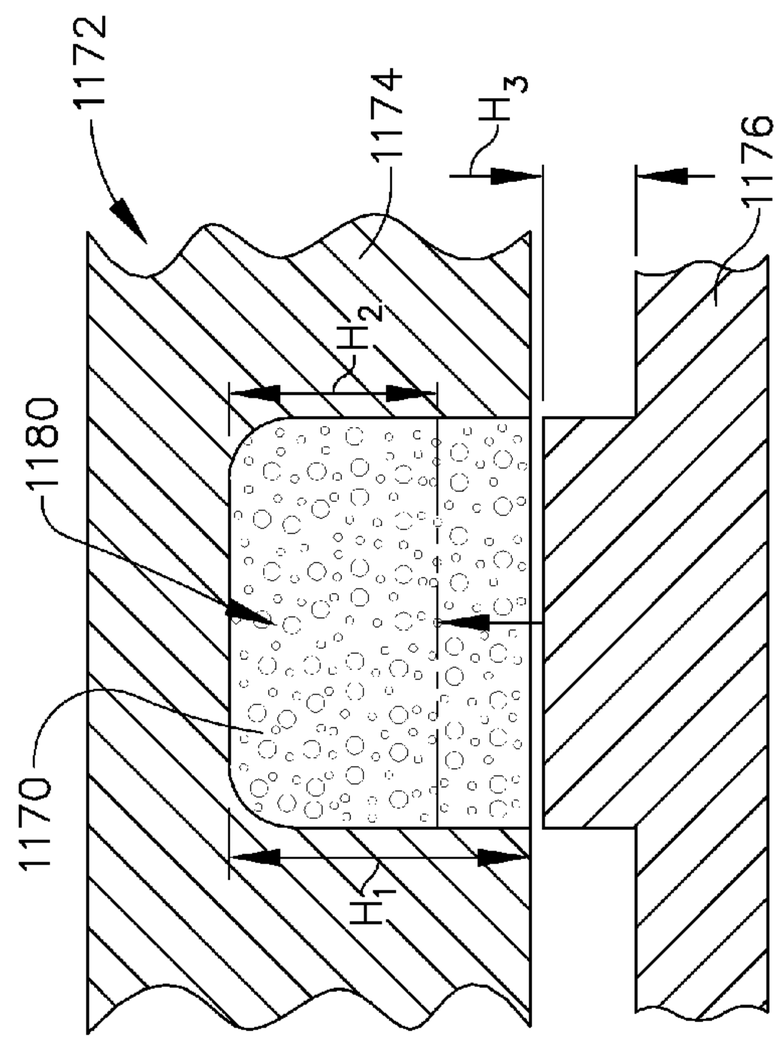

FIG. 37

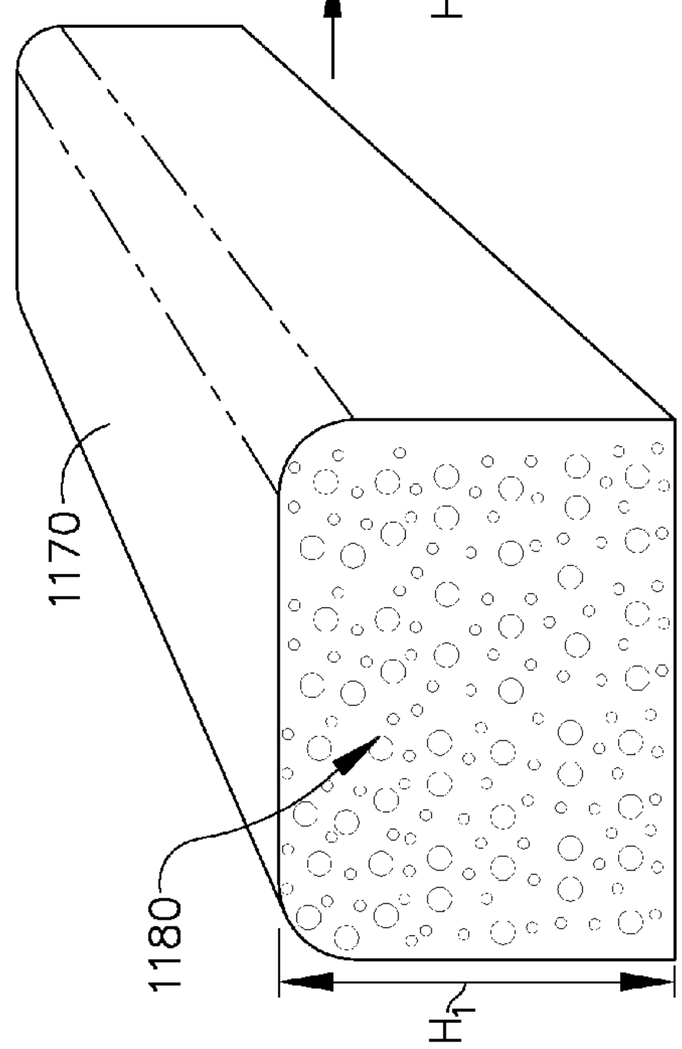

FIG. 35

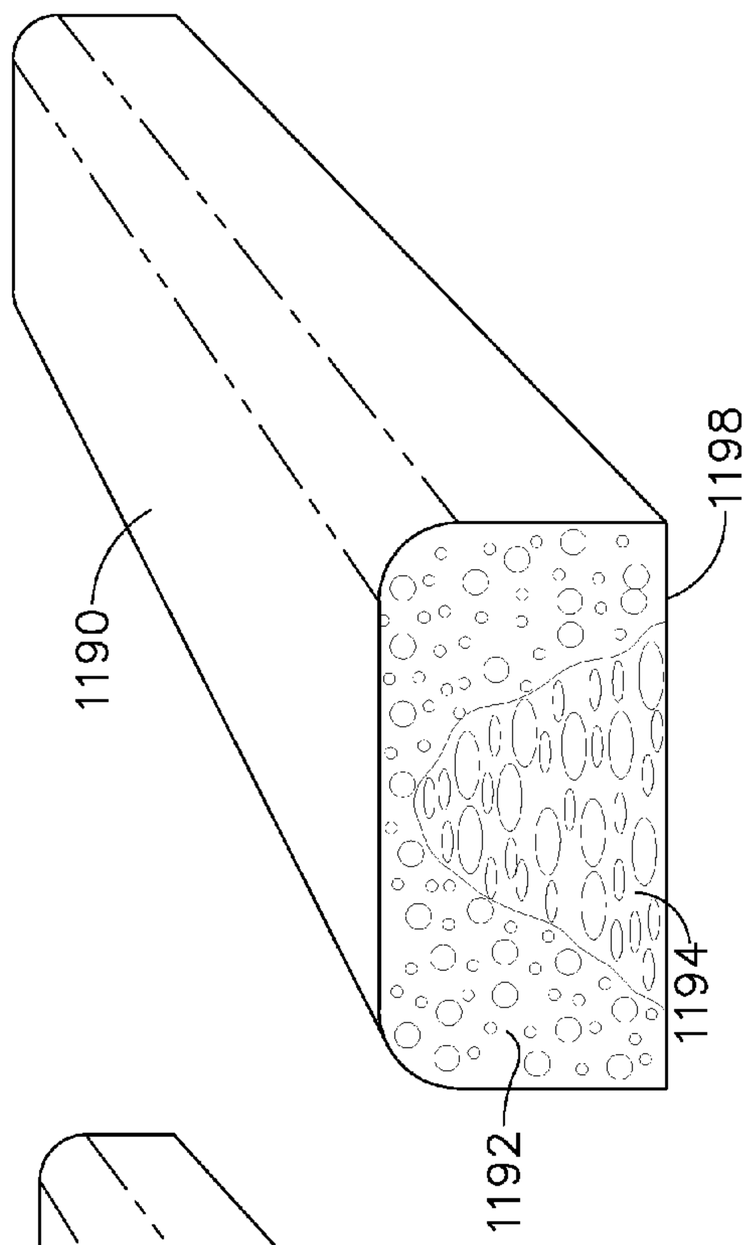

FIG. 39

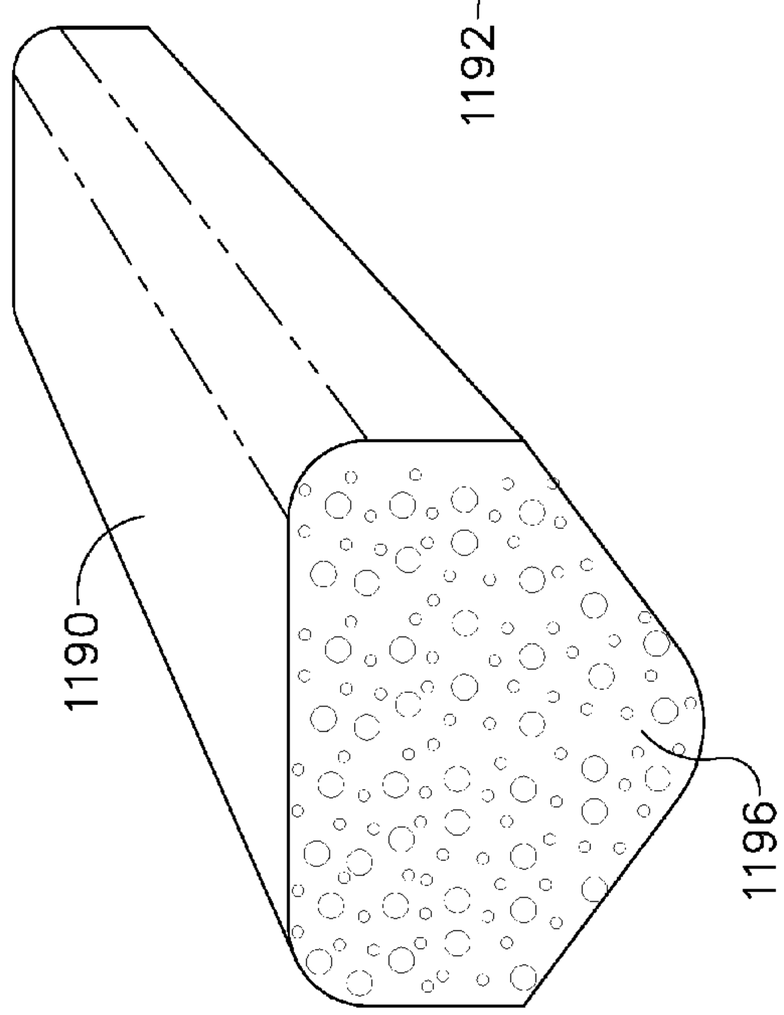

FIG. 38

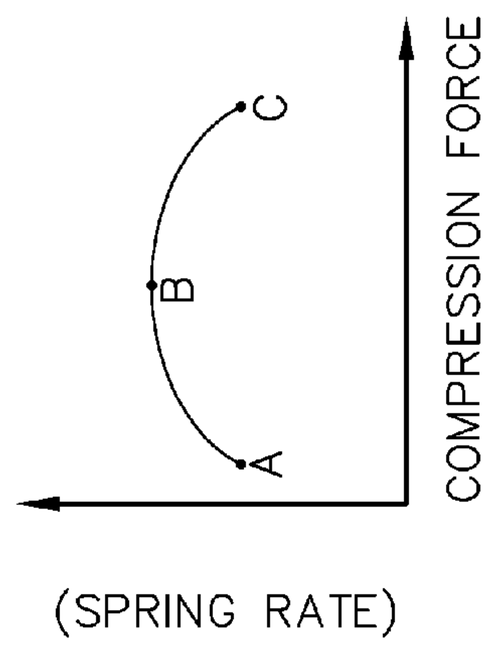

FIG. 40

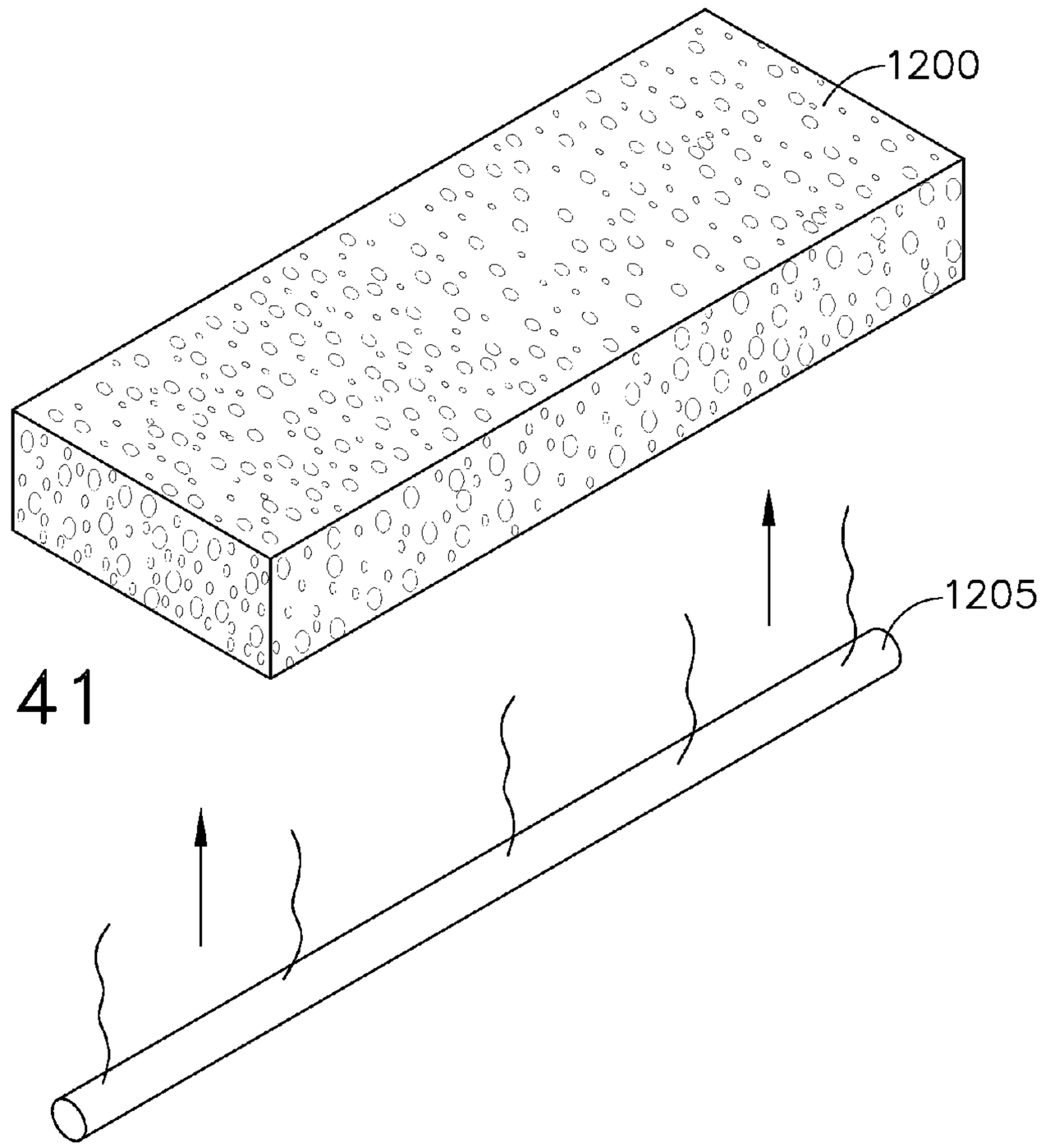

FIG. 41

FIG. 42

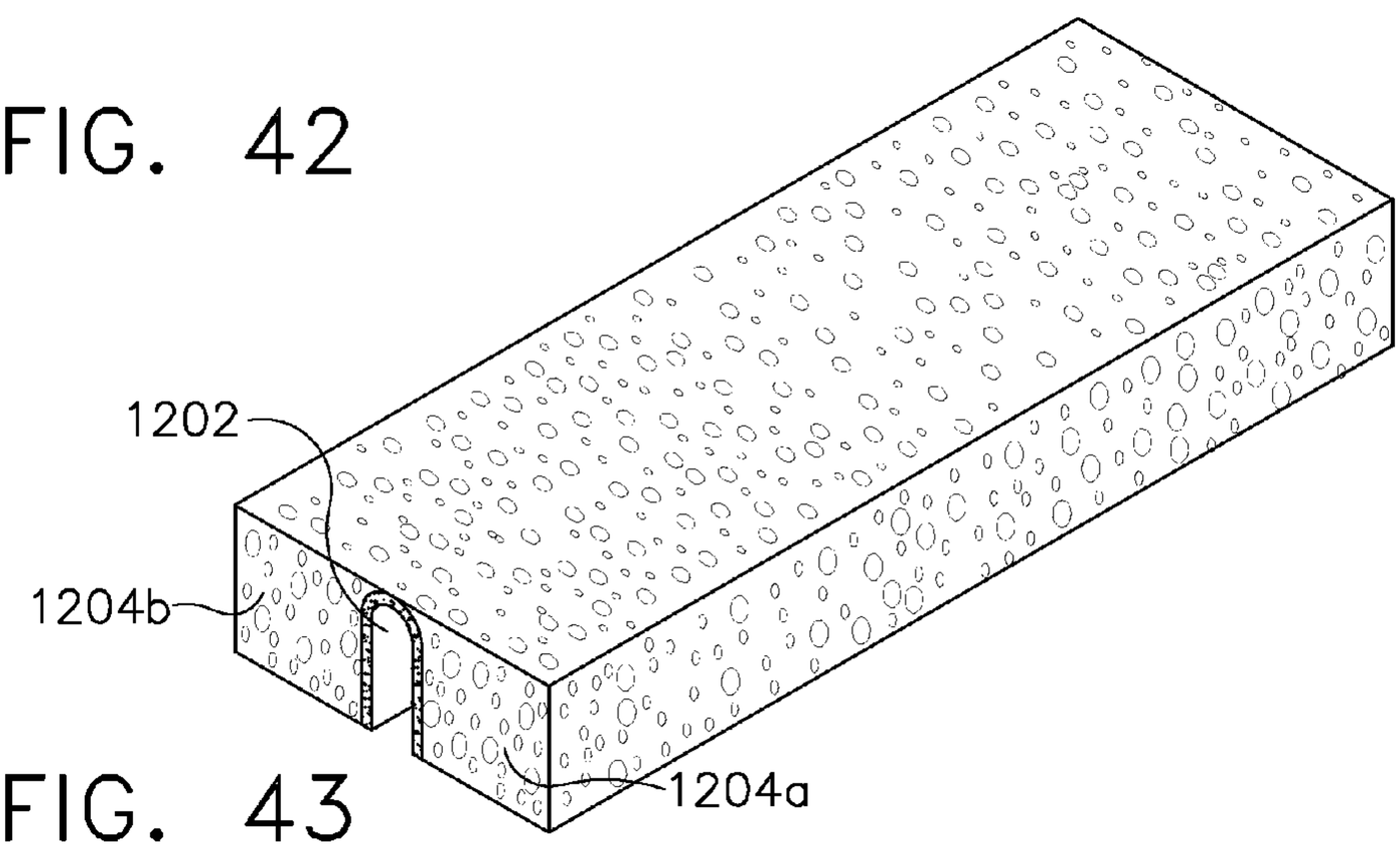

FIG. 43

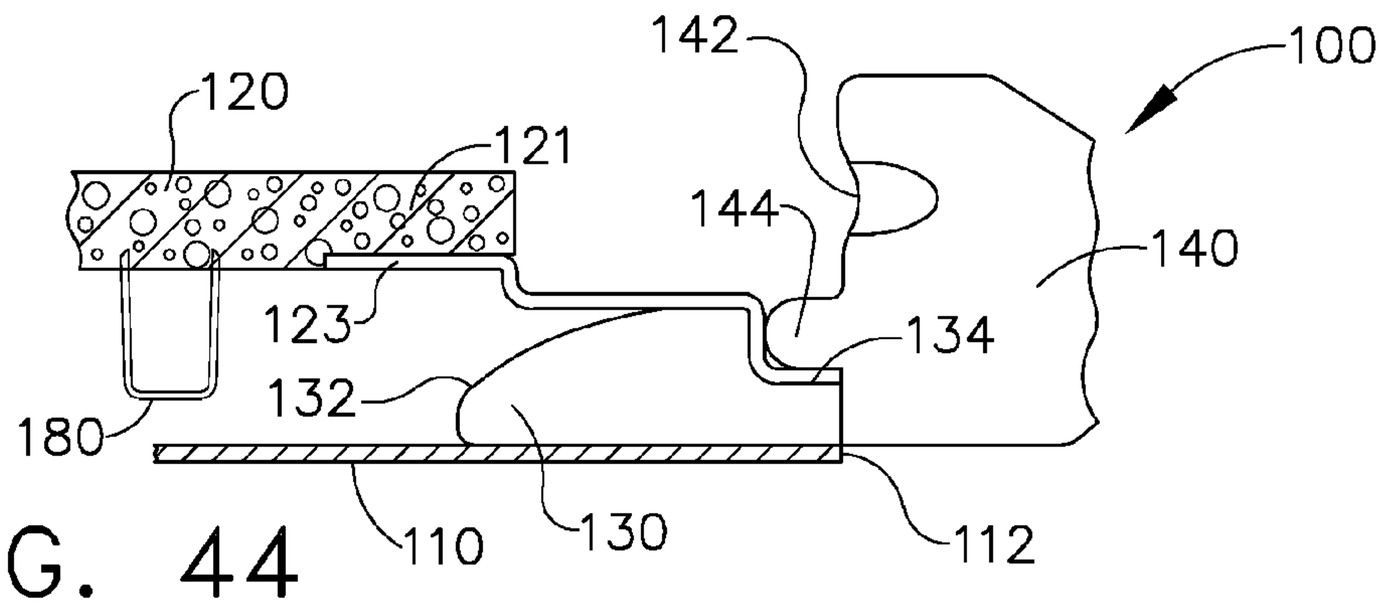

FIG. 44

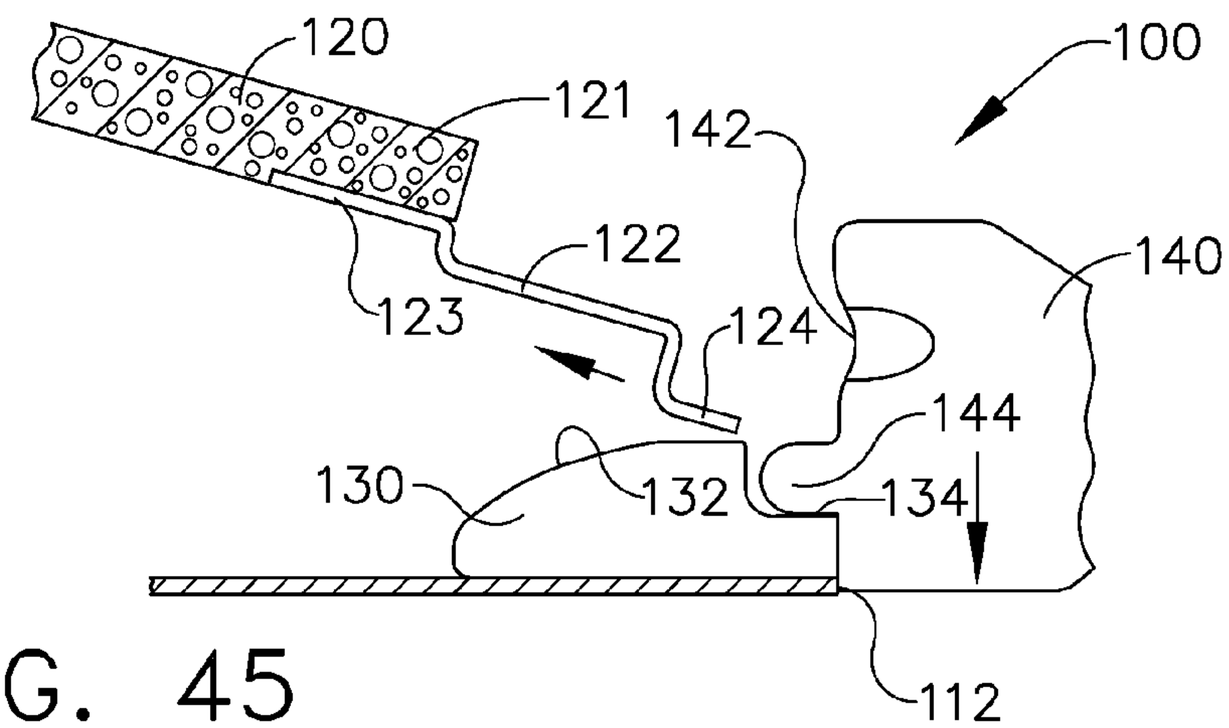

FIG. 45

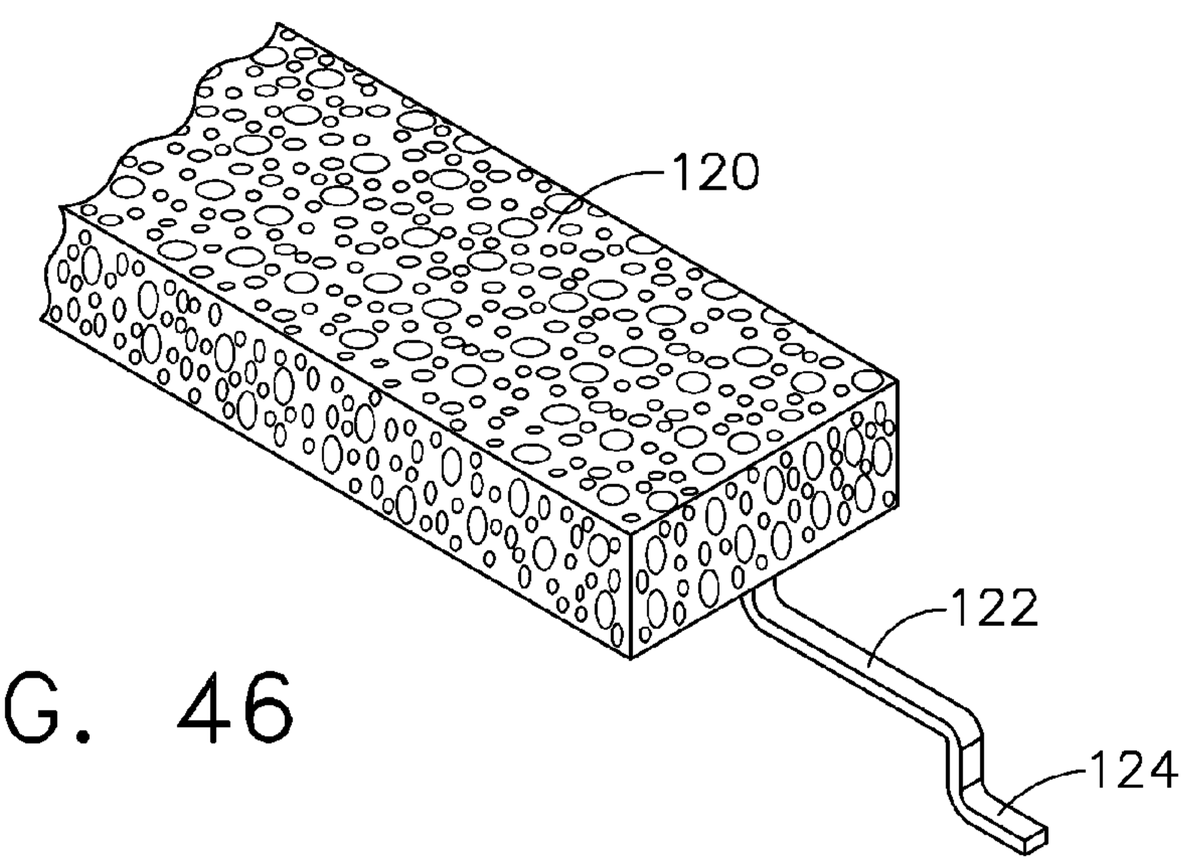

FIG. 46

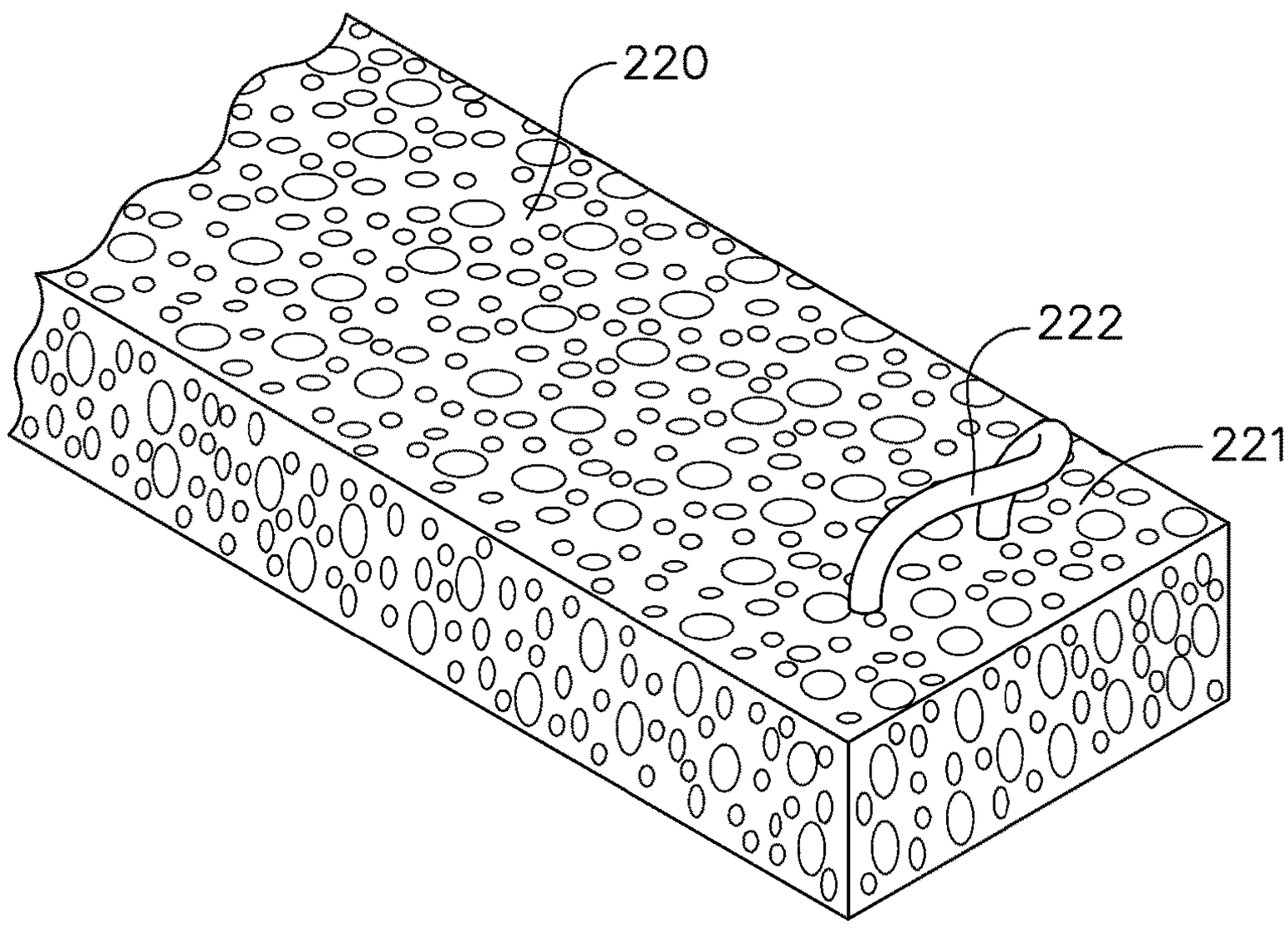

FIG. 47

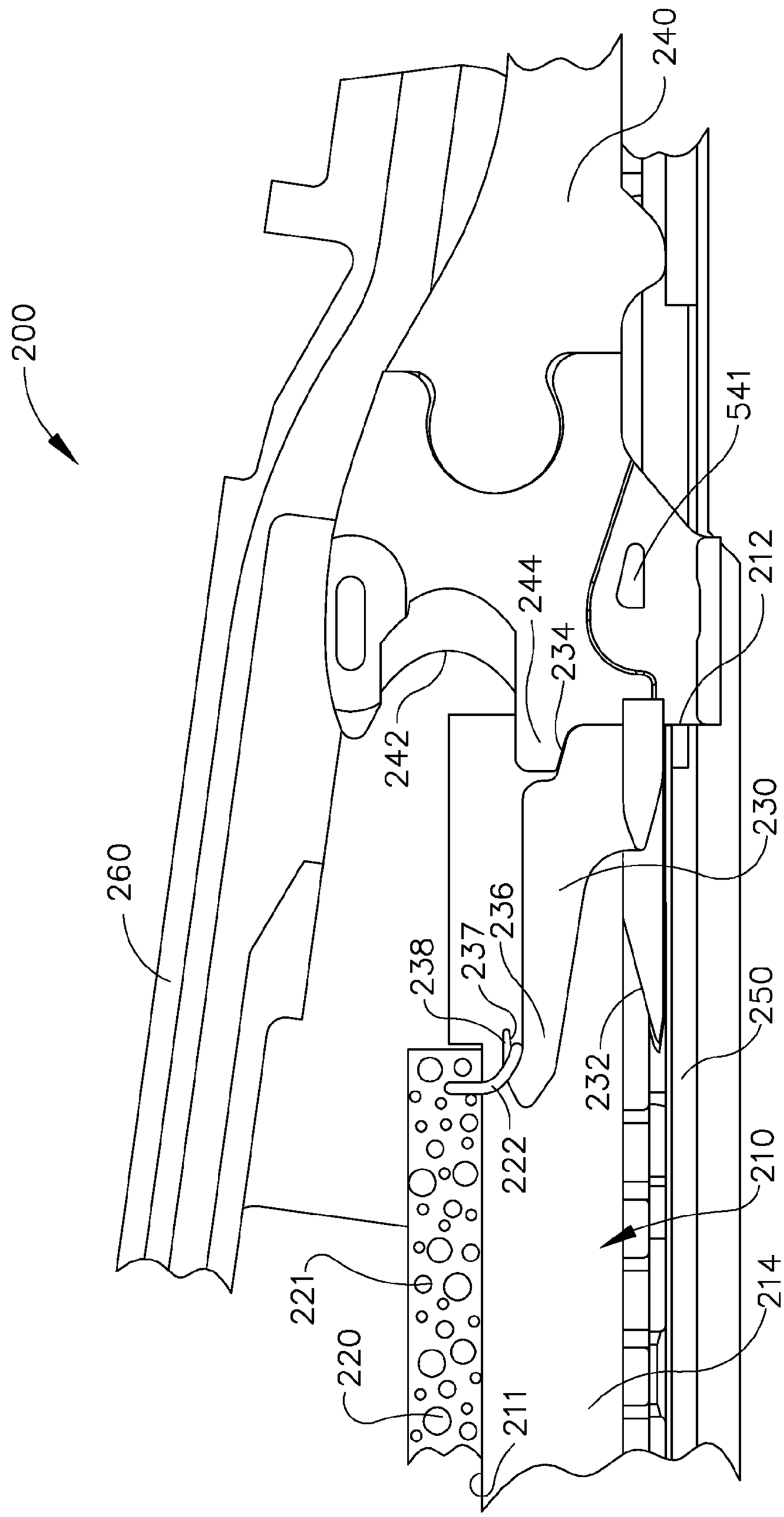
200
240
541
212
244
234
242
230
260
236
237
238
250
232
222
210
221
214
220
211

FIG. 48

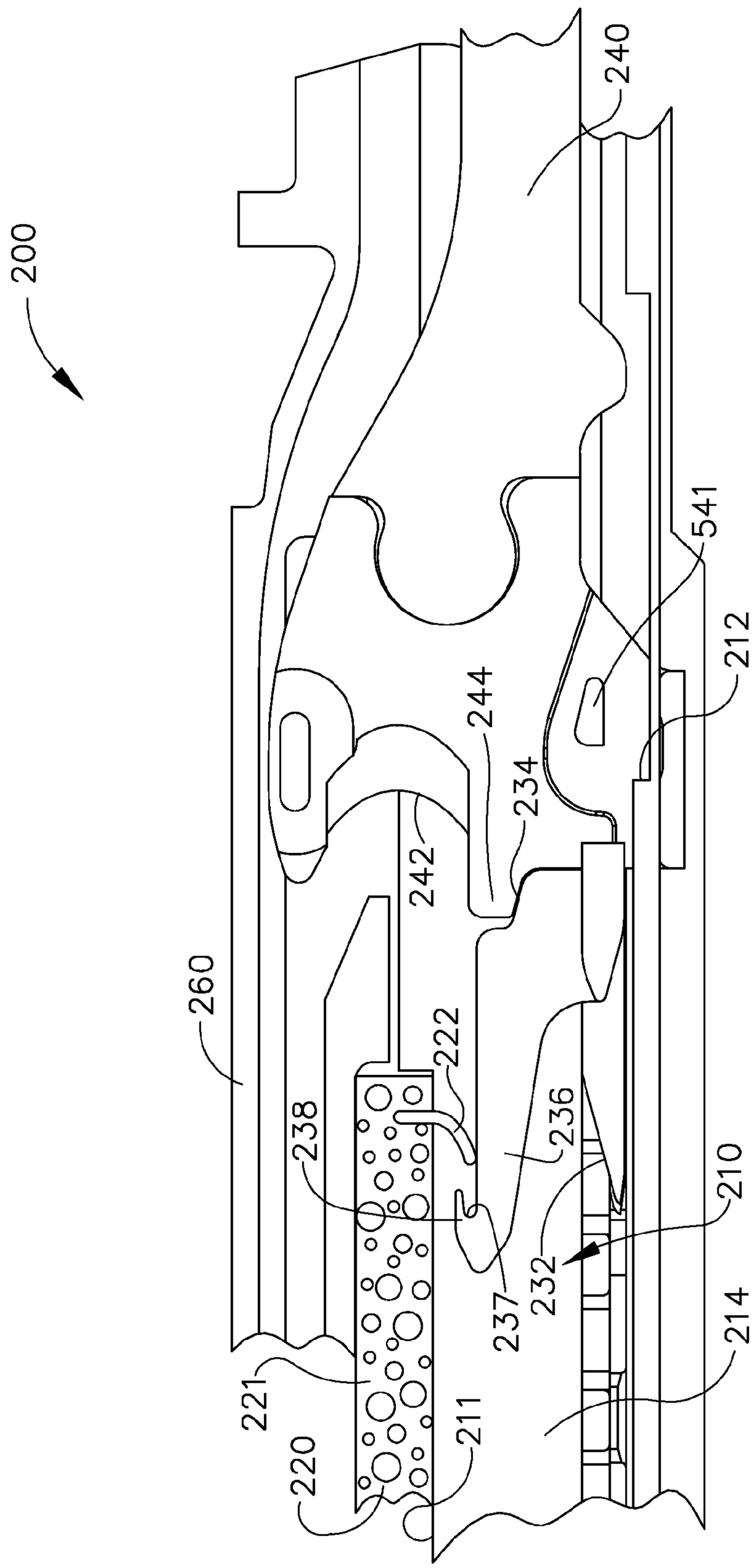
200
240
541
212
244
234
242
260
222
238
236
210
232
237
214
221
211
220

FIG. 49

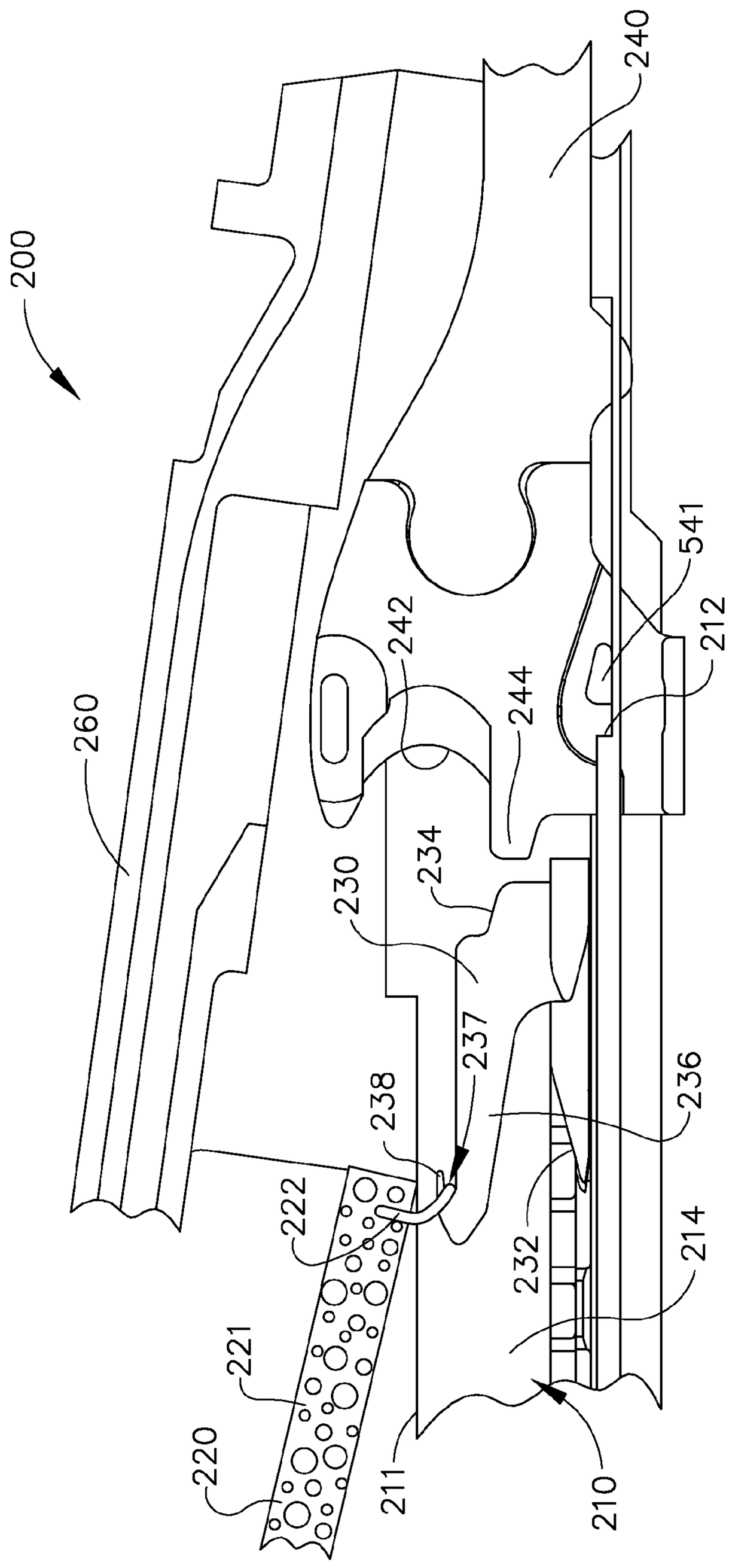
200
240
541
212
242
244
260
234
230
237
238
236
222
232
214
221
220
211
210

FIG. 50

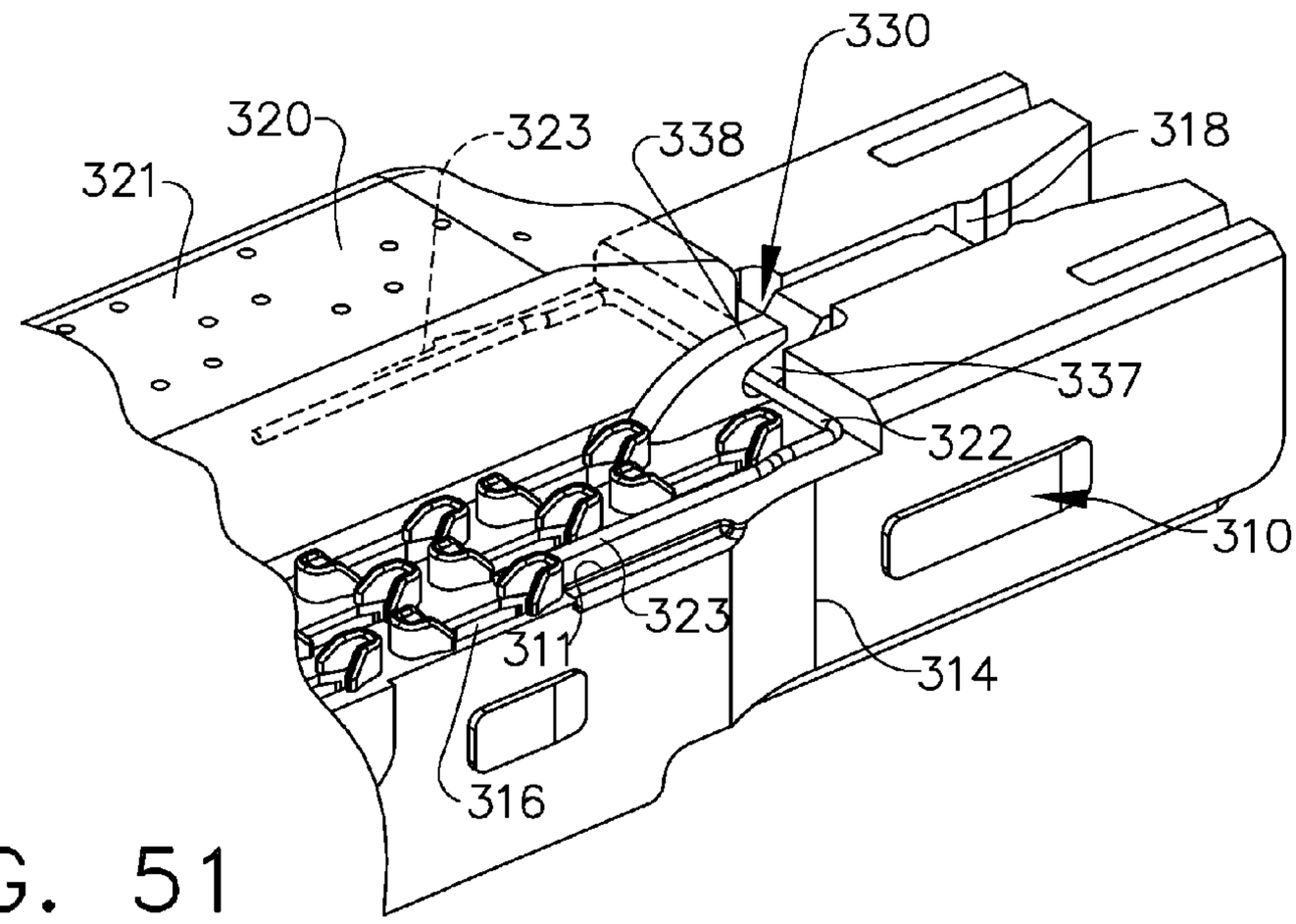
330
320
323
338
318
321
337
322
310
323
311
314
316

FIG. 51

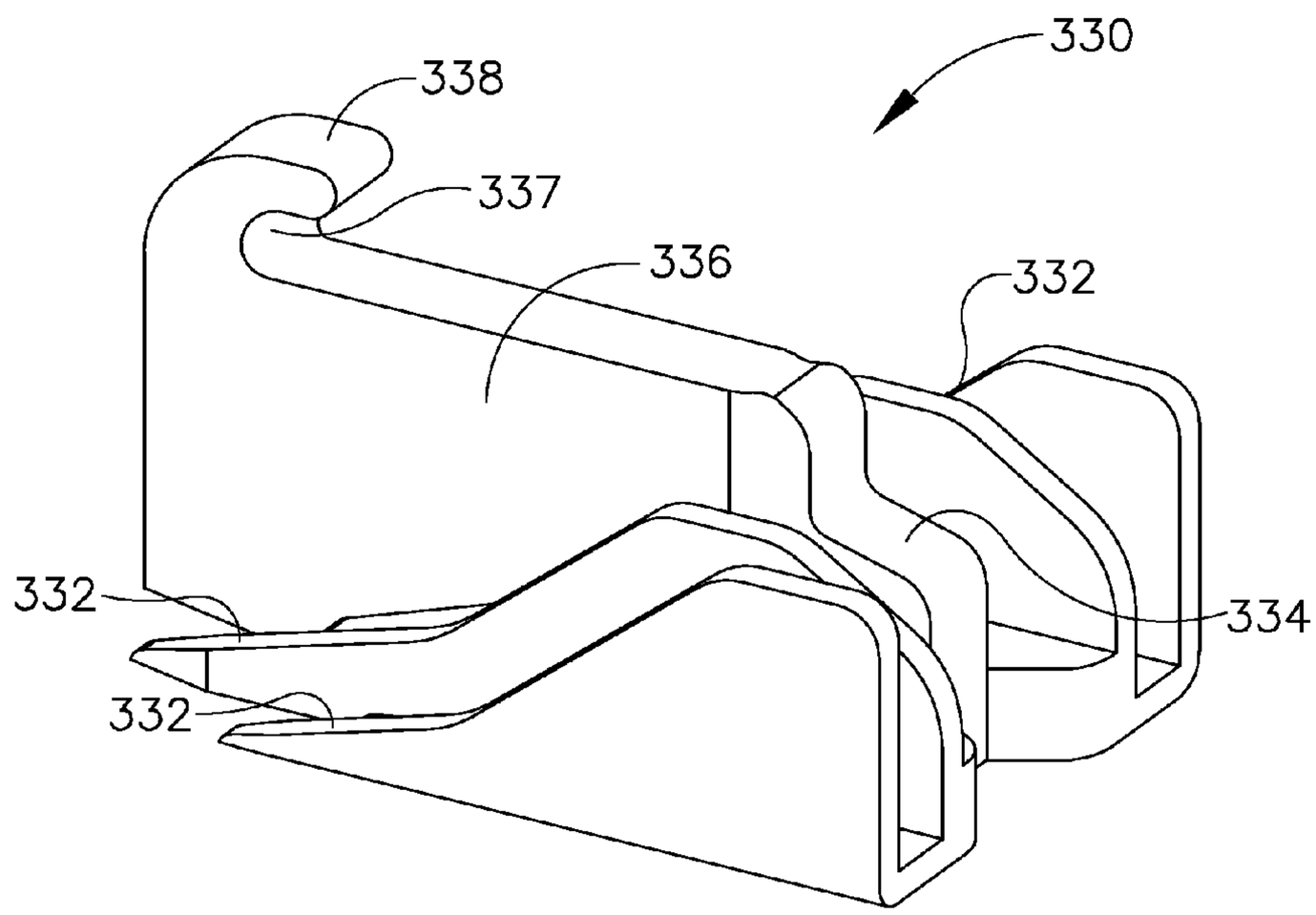
330
338
337
336
332
332
334
332

FIG. 52

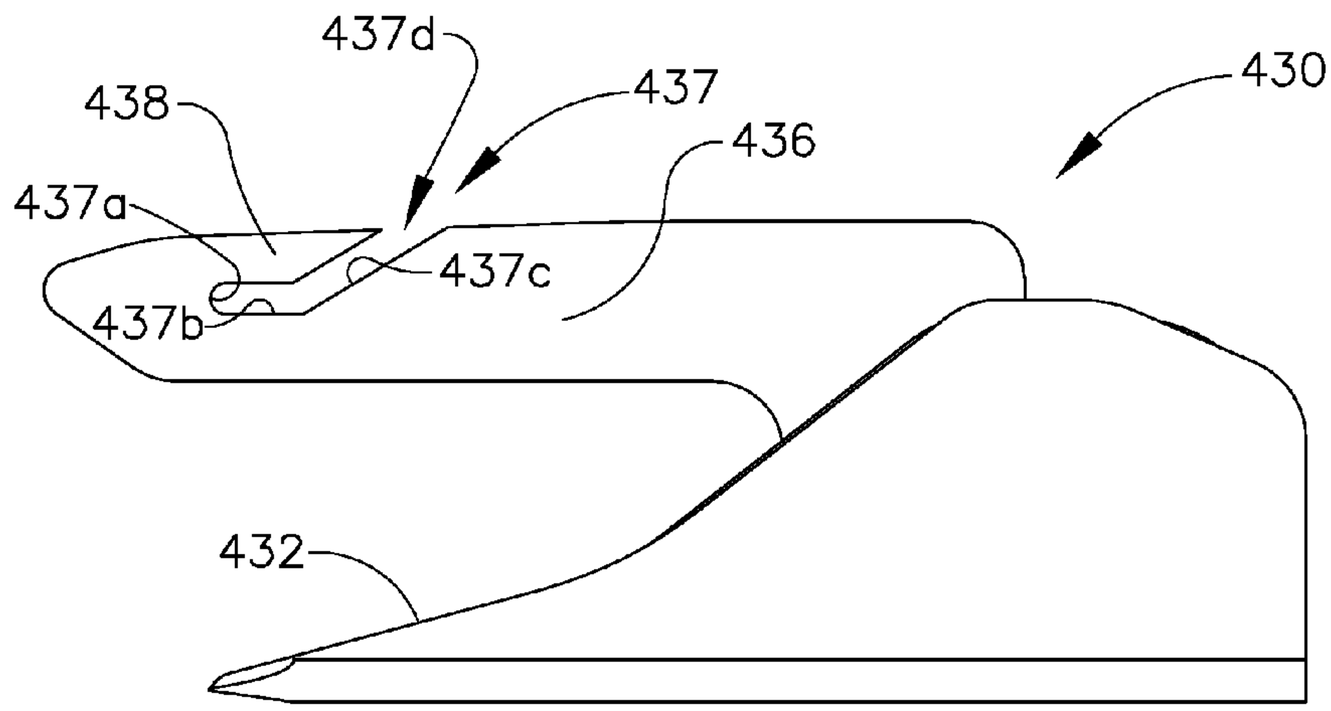
437d
438
437
430
436
437a
437c
437b
432

FIG. 54

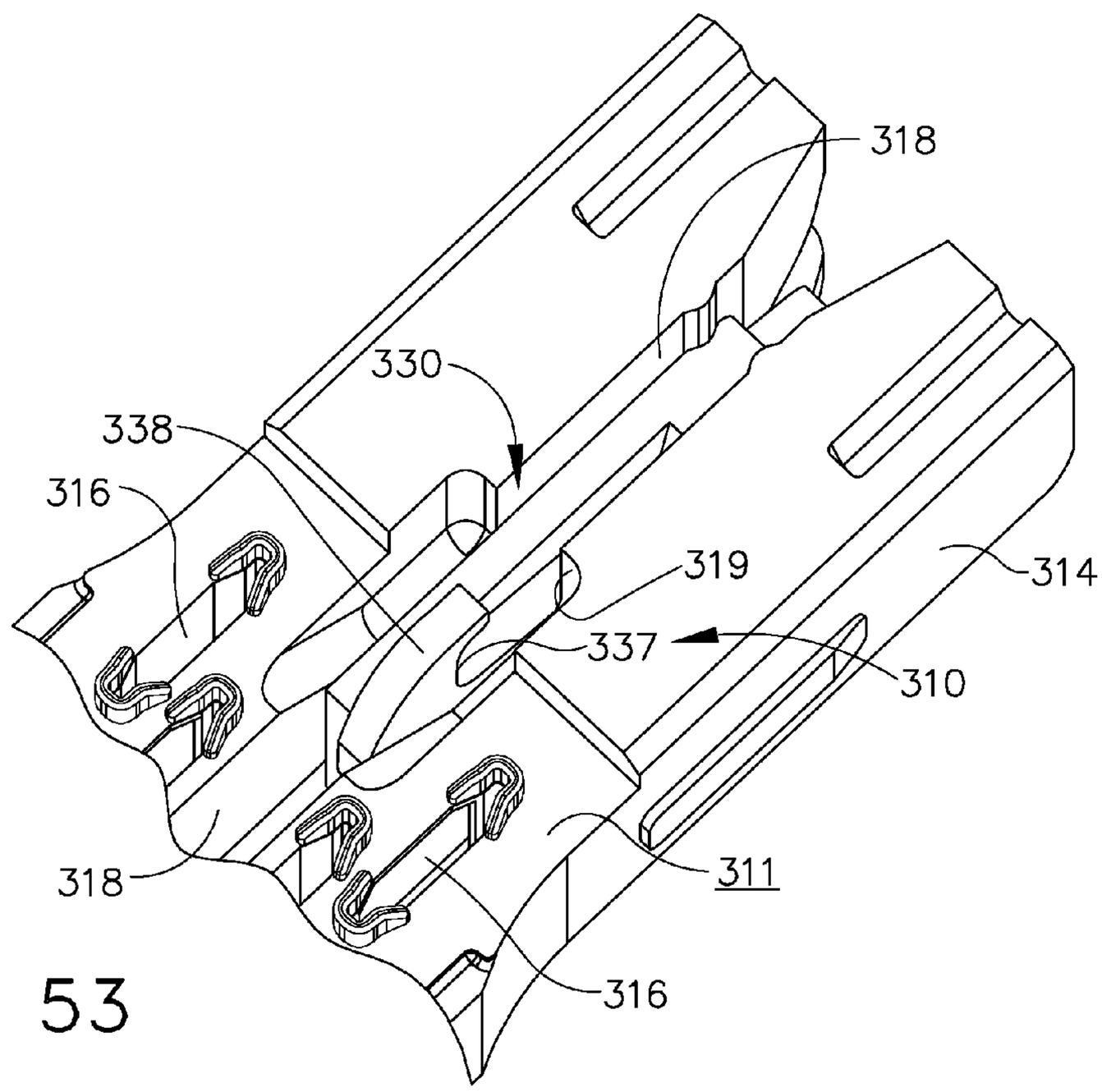
318
330
338
316
319
314
337
310
318
311
316

FIG. 53

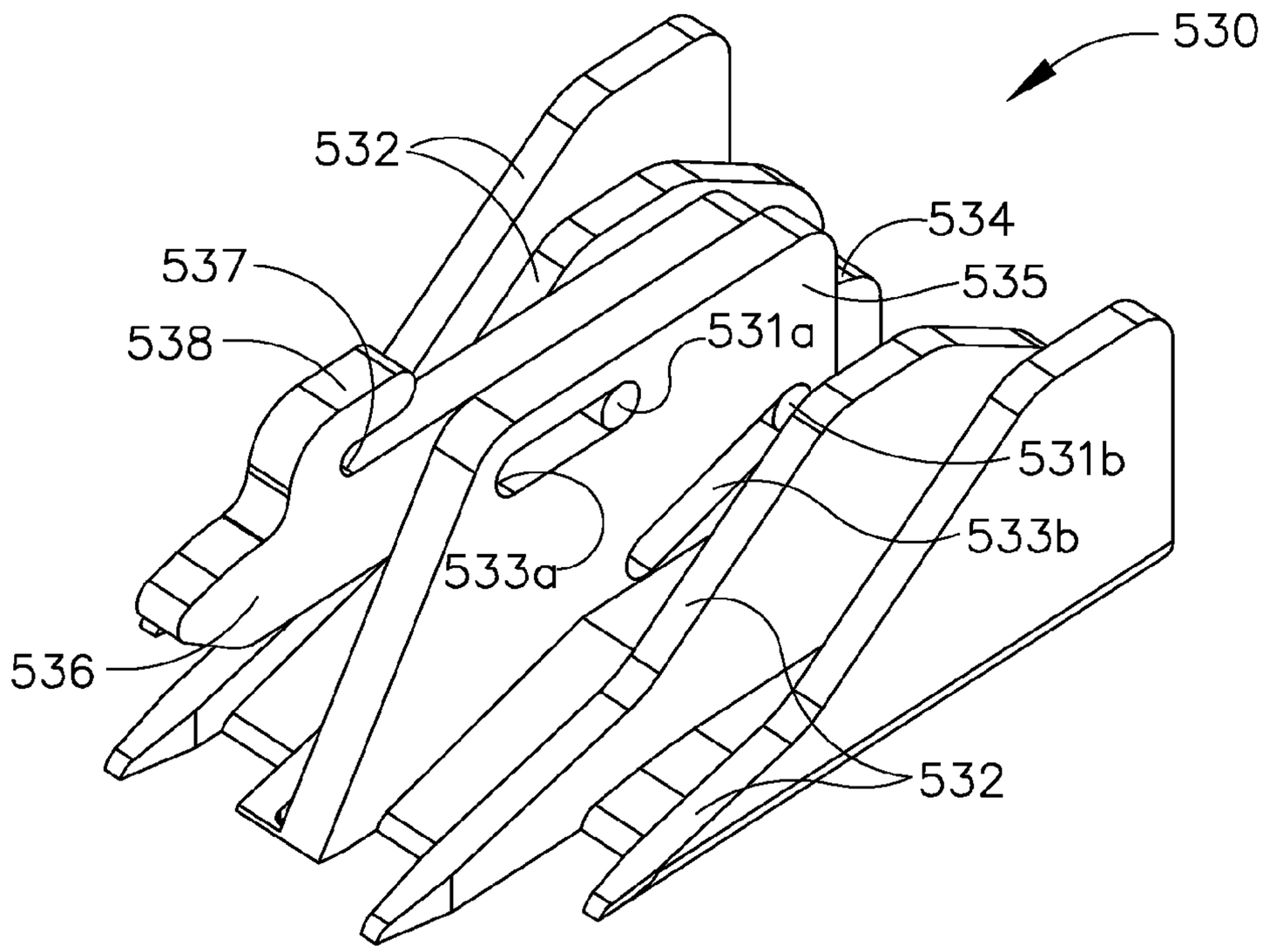
530
532
534
537
535
538
531a
531b
533b
533a
536
532

FIG. 55

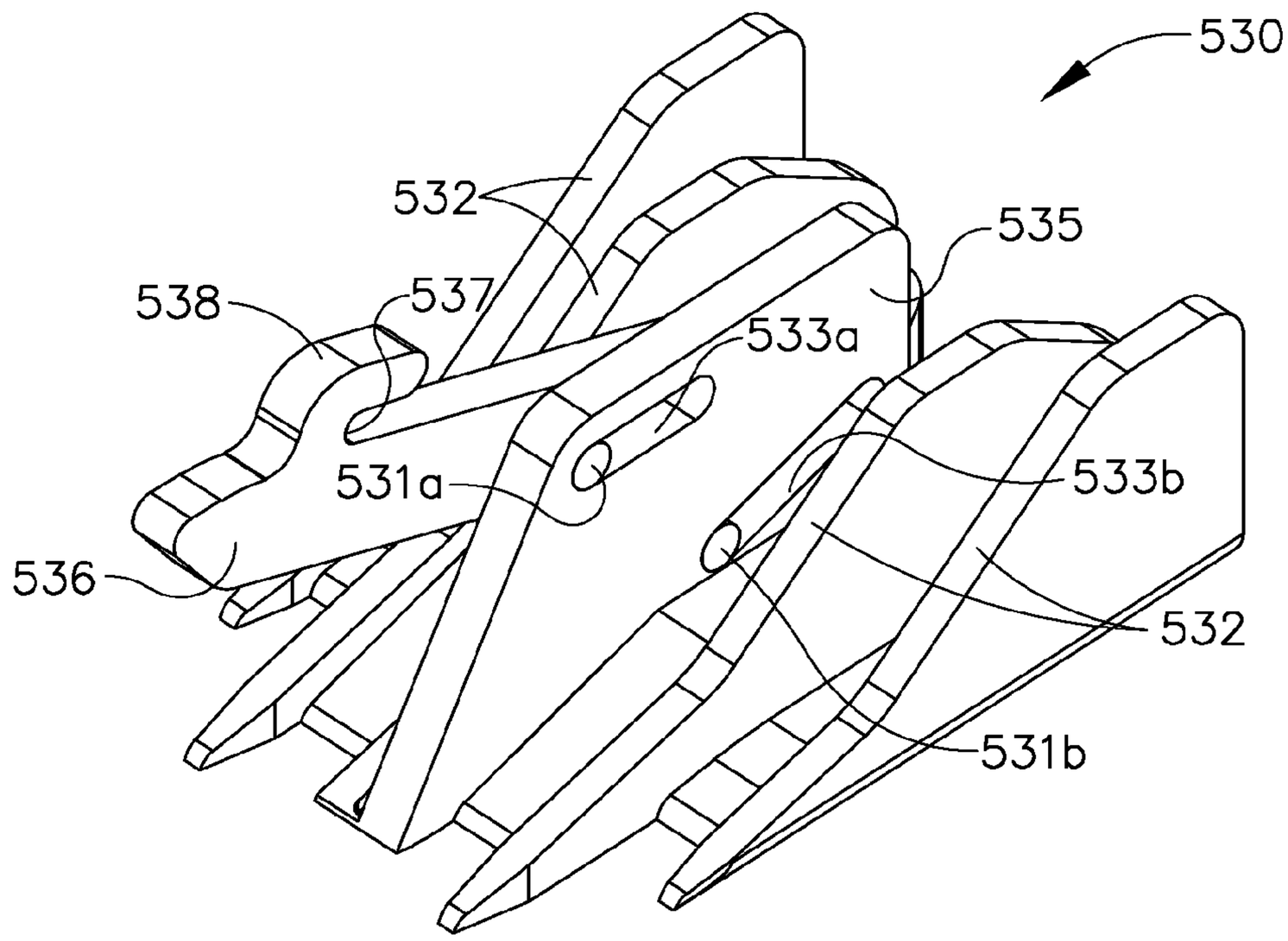
530
532
535
538
537
533a
533b
531a
536
532
531b

FIG. 56

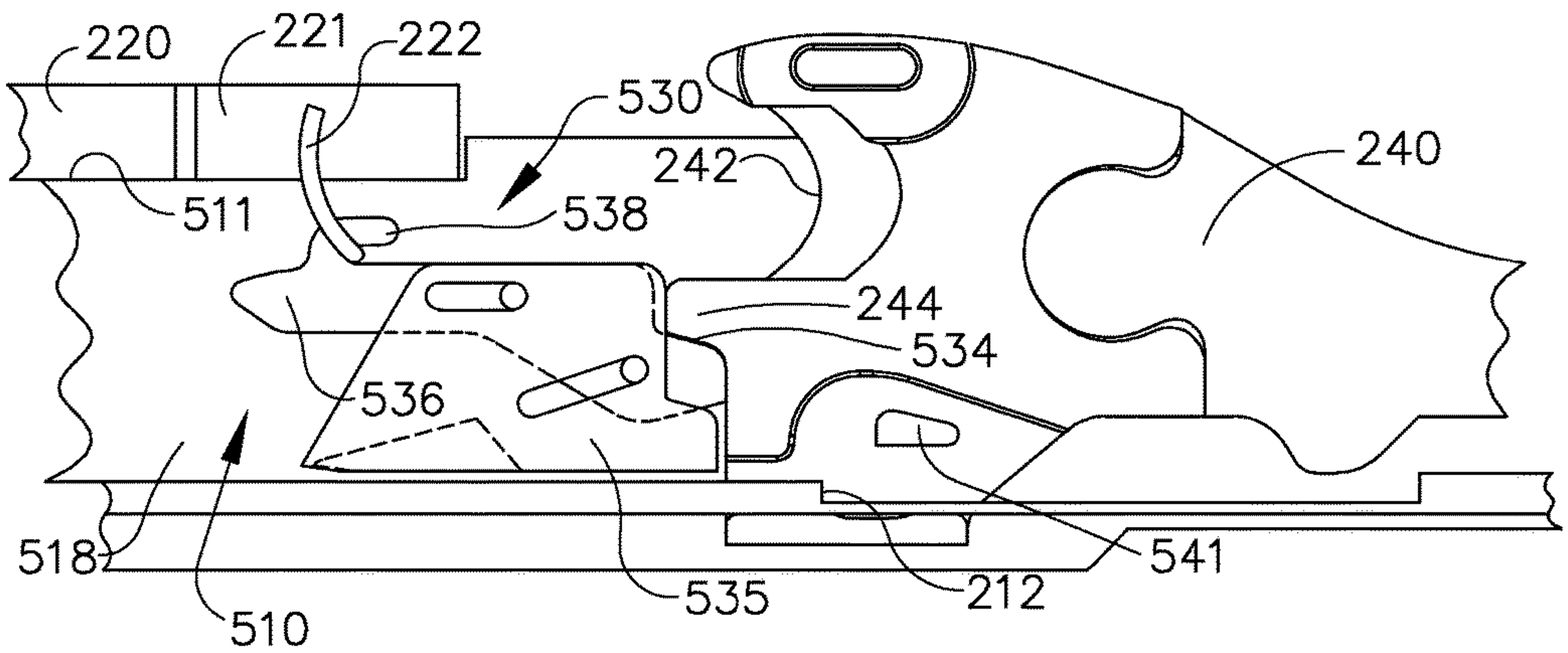
220
221
222
530
242
240
511
538
244
534
536
518
510
535
212
541

FIG. 57

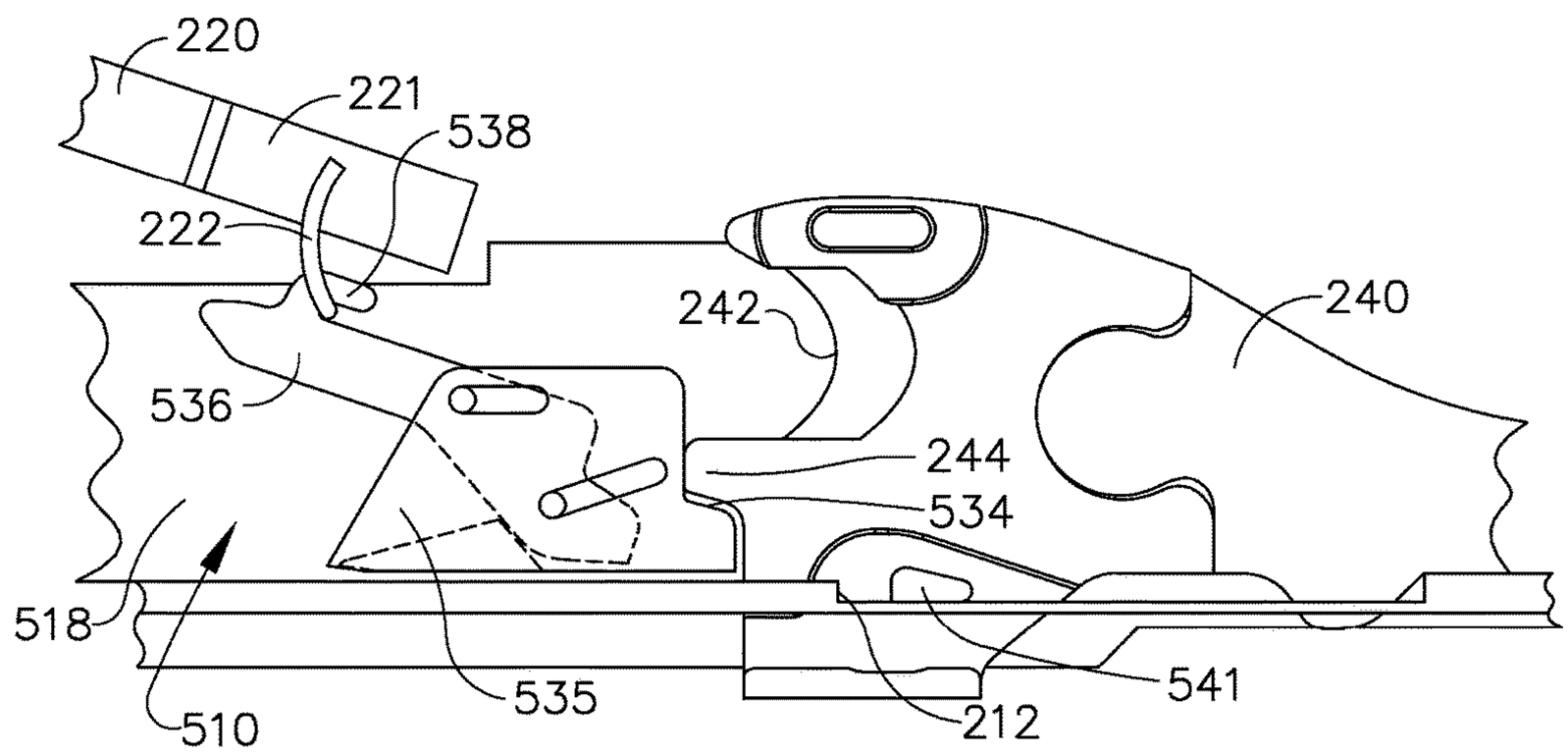
220
221
538
222
242
240
536
244
534
518
510
535
212
541

FIG. 58

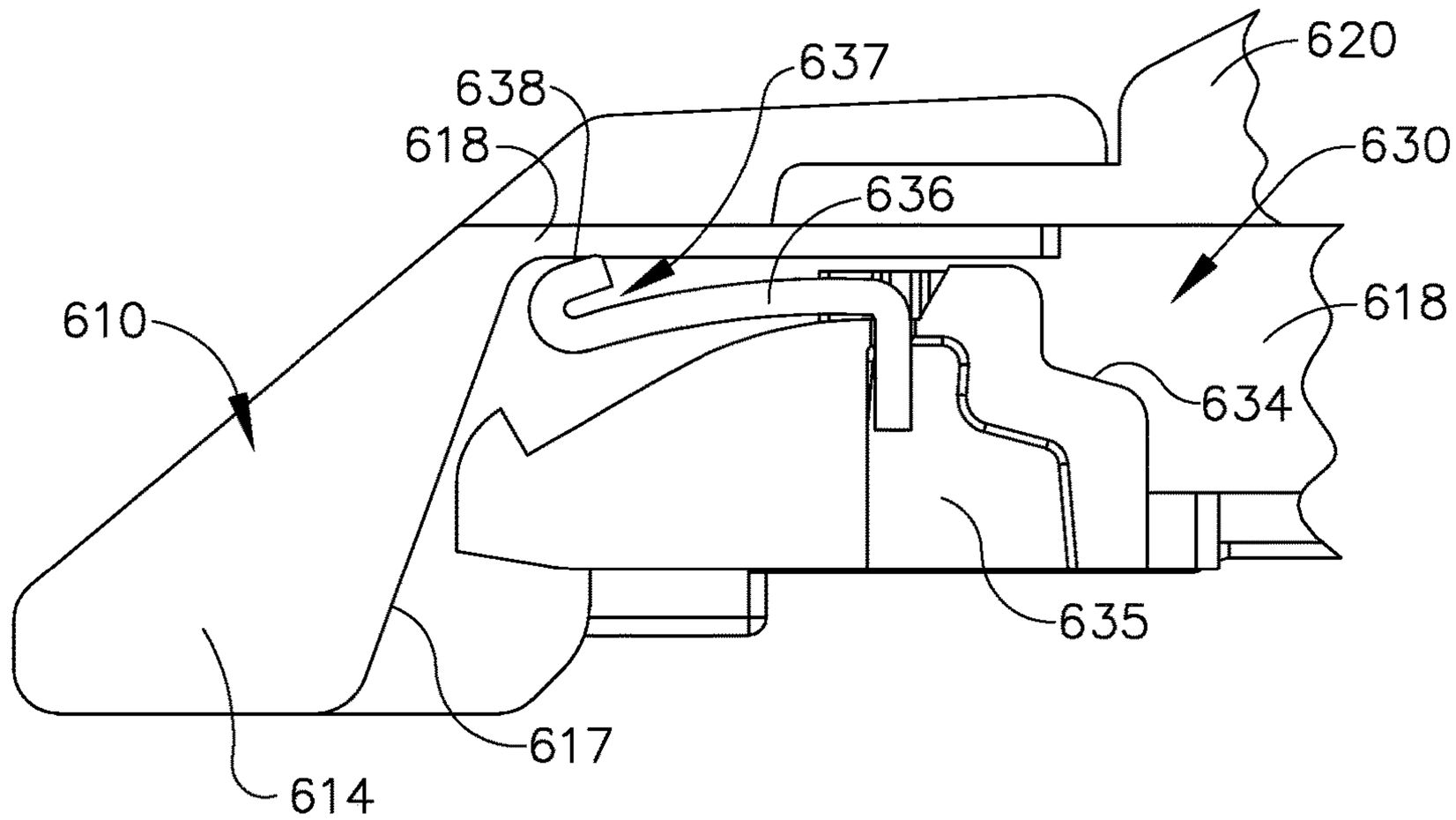
620
637
638
630
618
636
610
618
634
635
617
614

FIG. 60

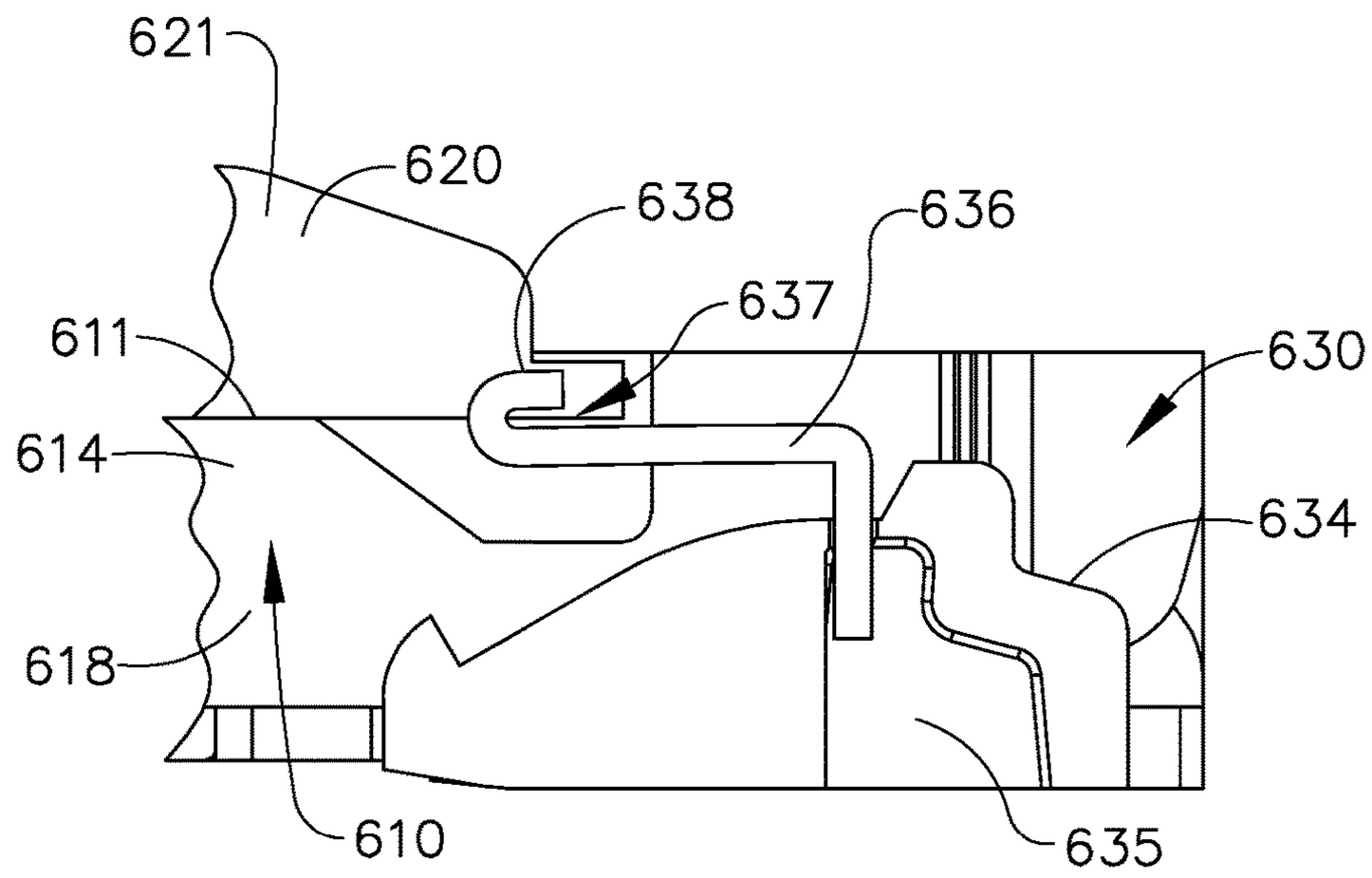
621
620
638
636
637
611
630
614
634
618
610
635

FIG. 59

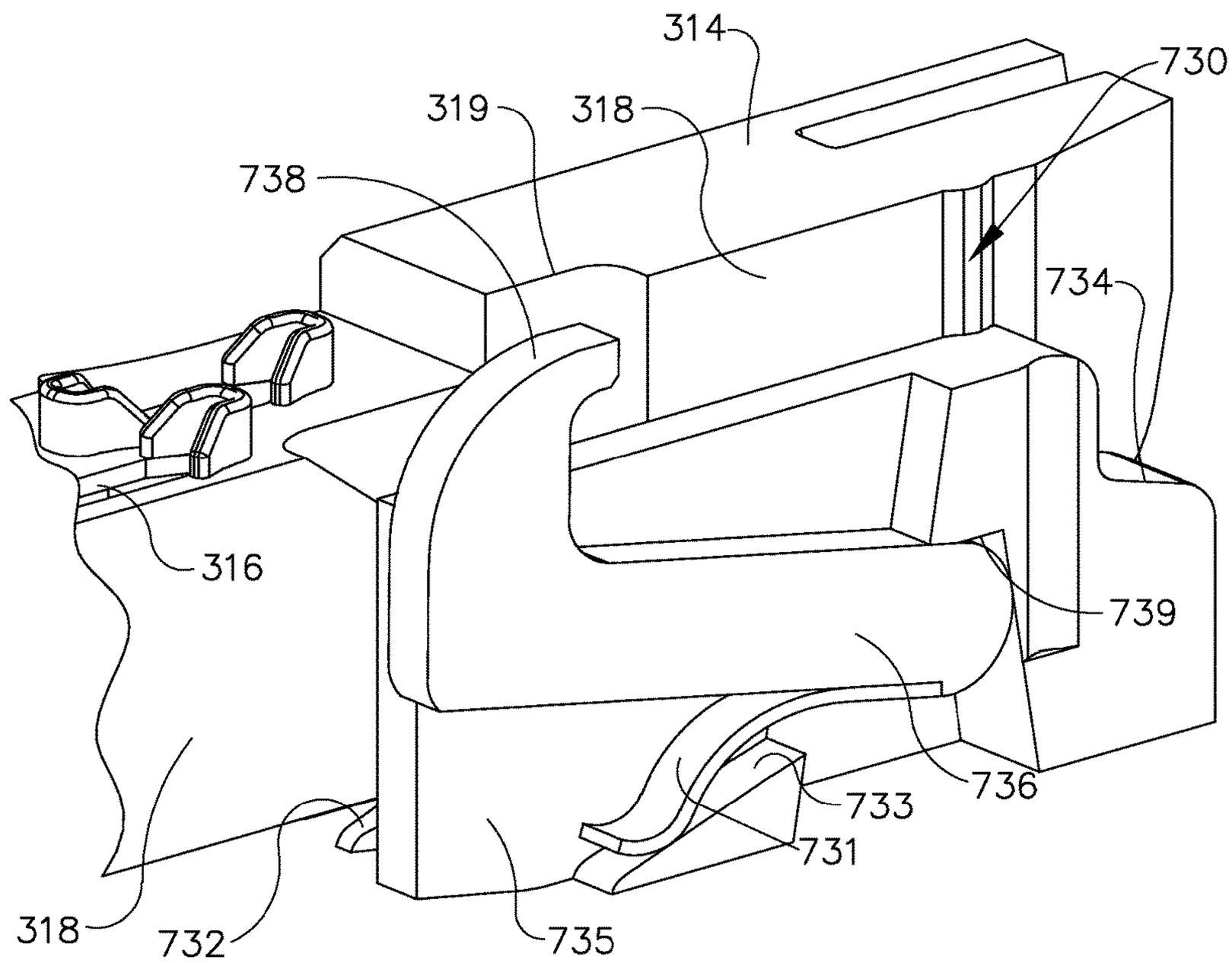

FIG. 61

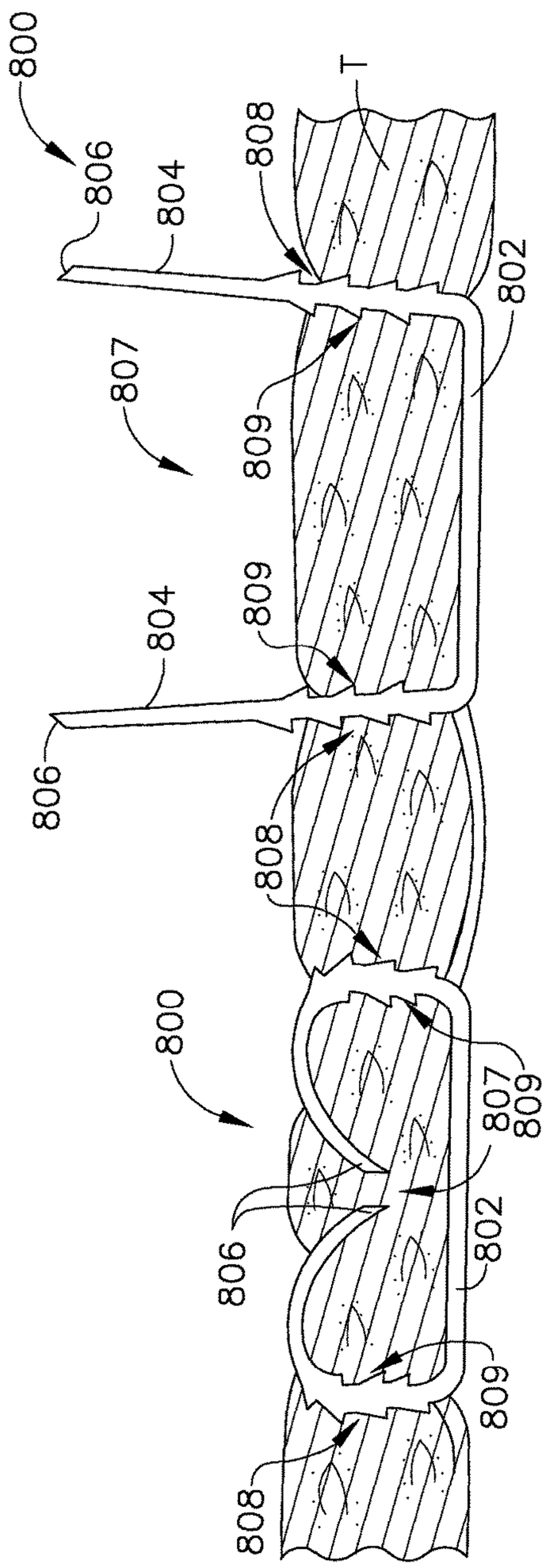
800
806
804
808
T
802
807
809
809
804
806
808
800
807
809
806
802
809
808

FIG. 62

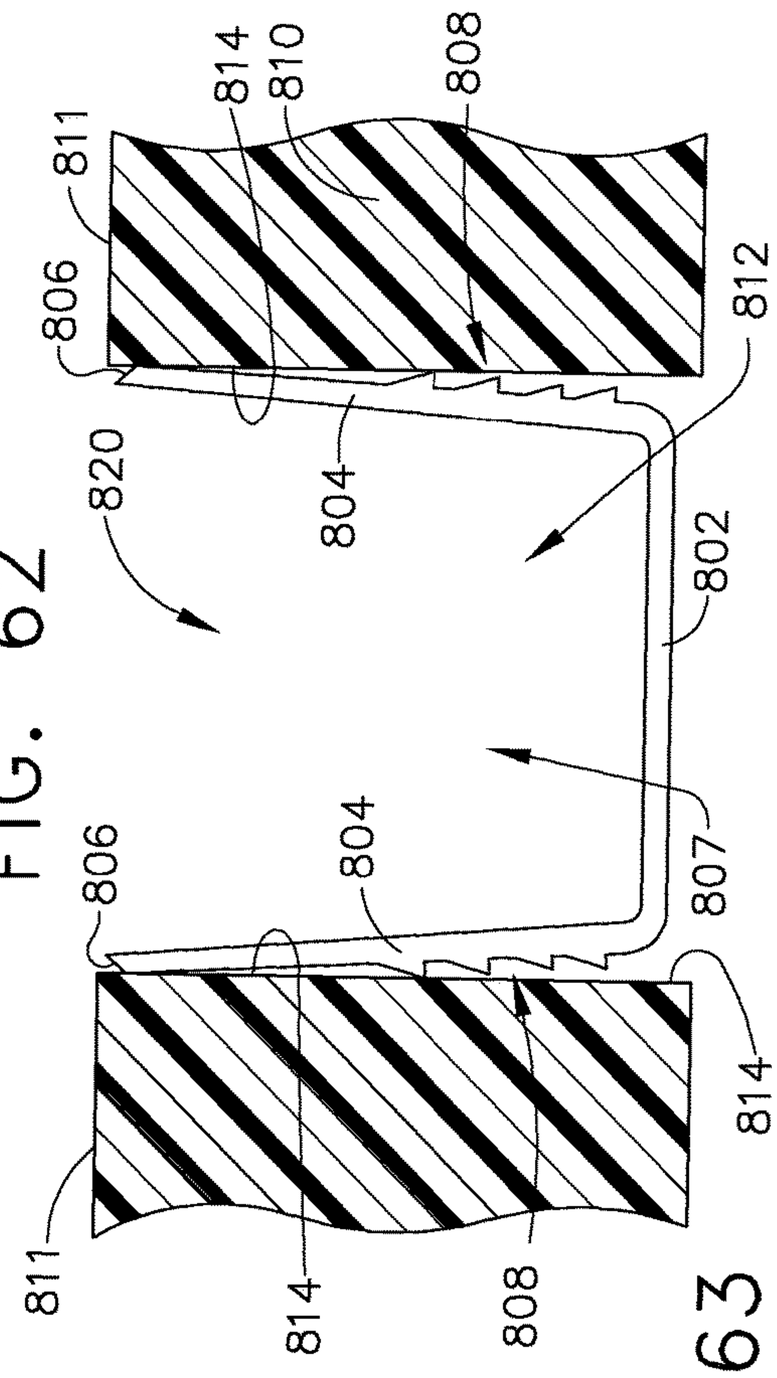
811
806
814
810
808
812
820
804
802
807
806
804
814
811
814
808

FIG. 63

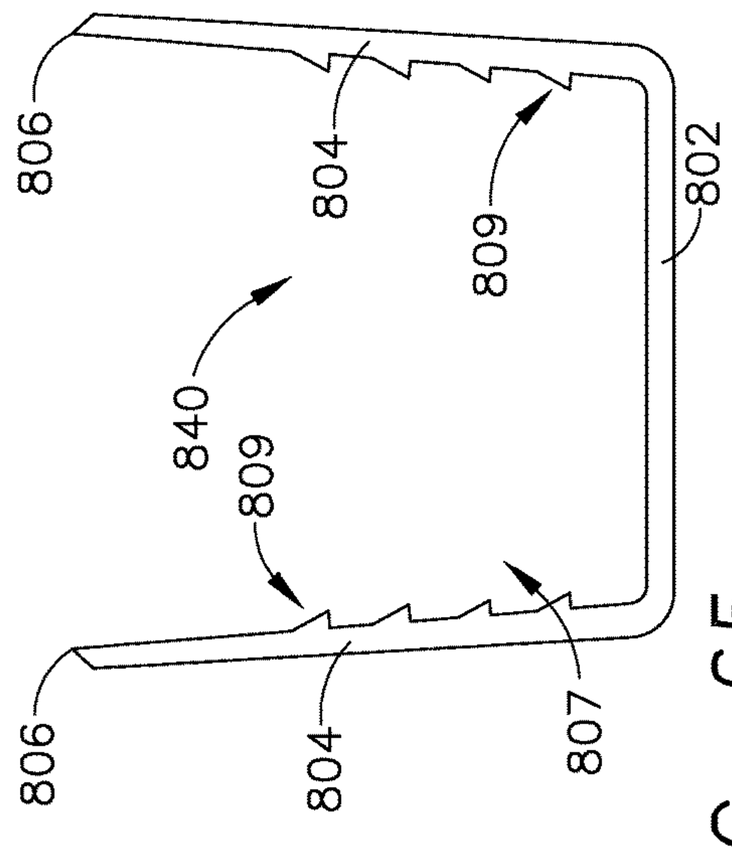

FIG. 65

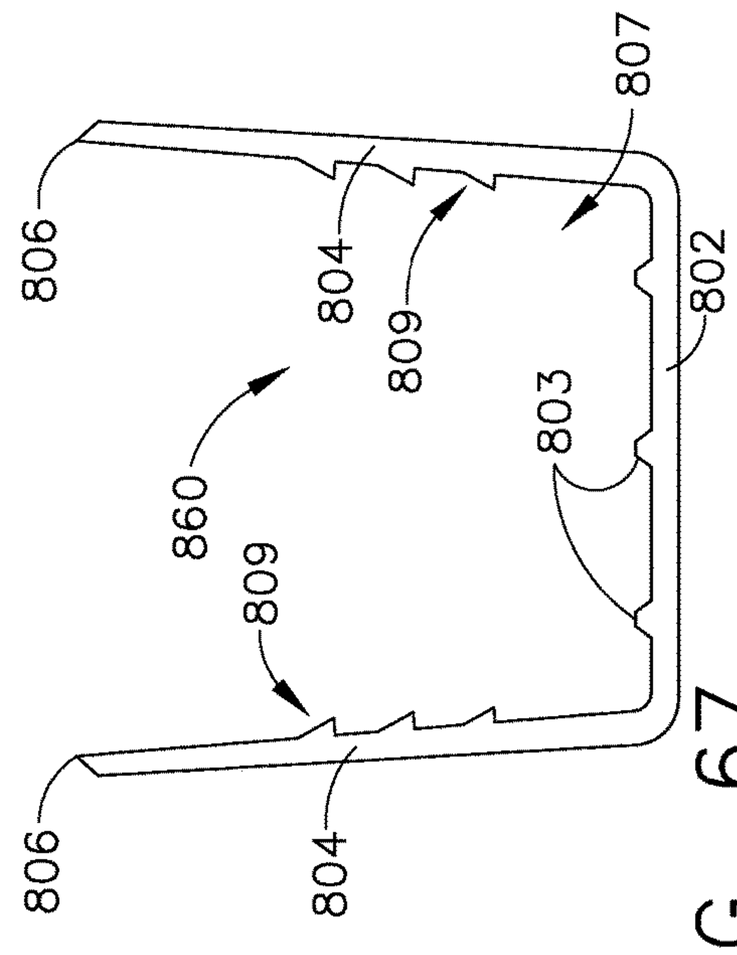

FIG. 67

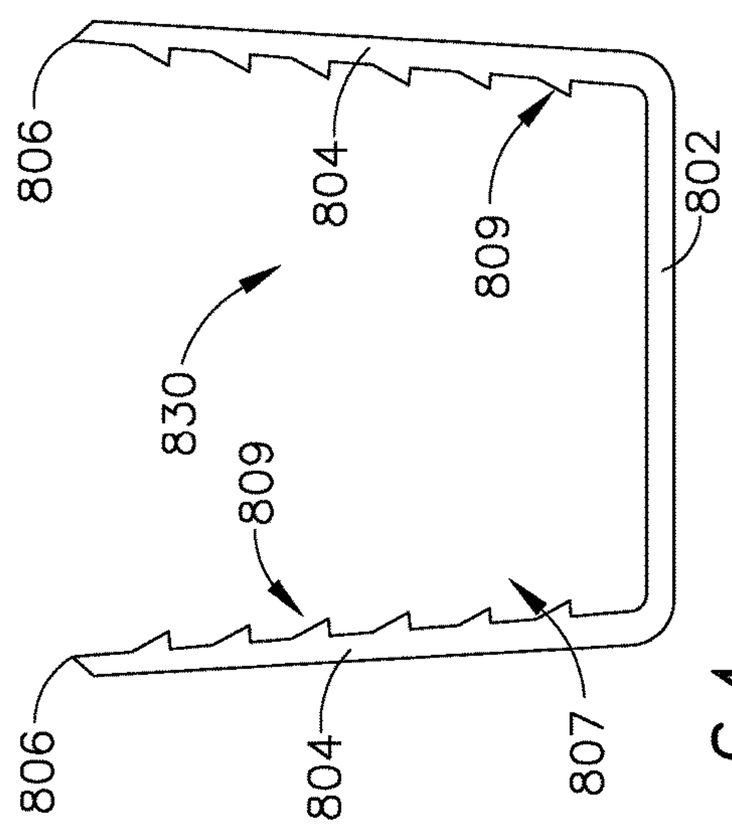

FIG. 64

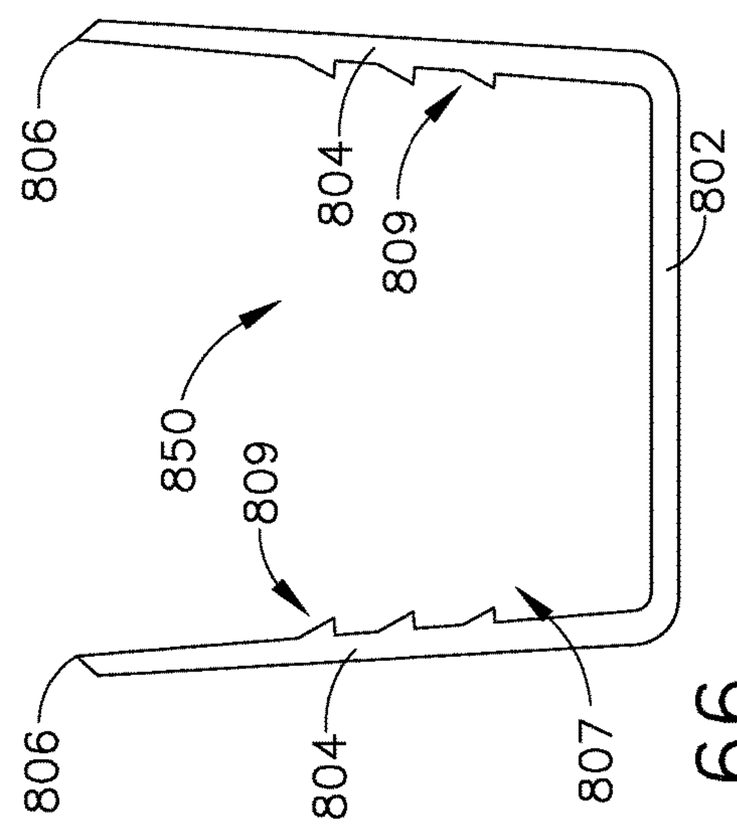

FIG. 66

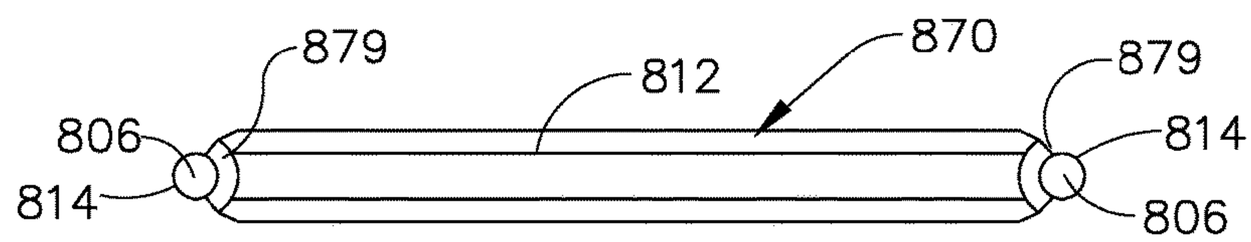
879
812
870
879
806
814
814
806

FIG. 69

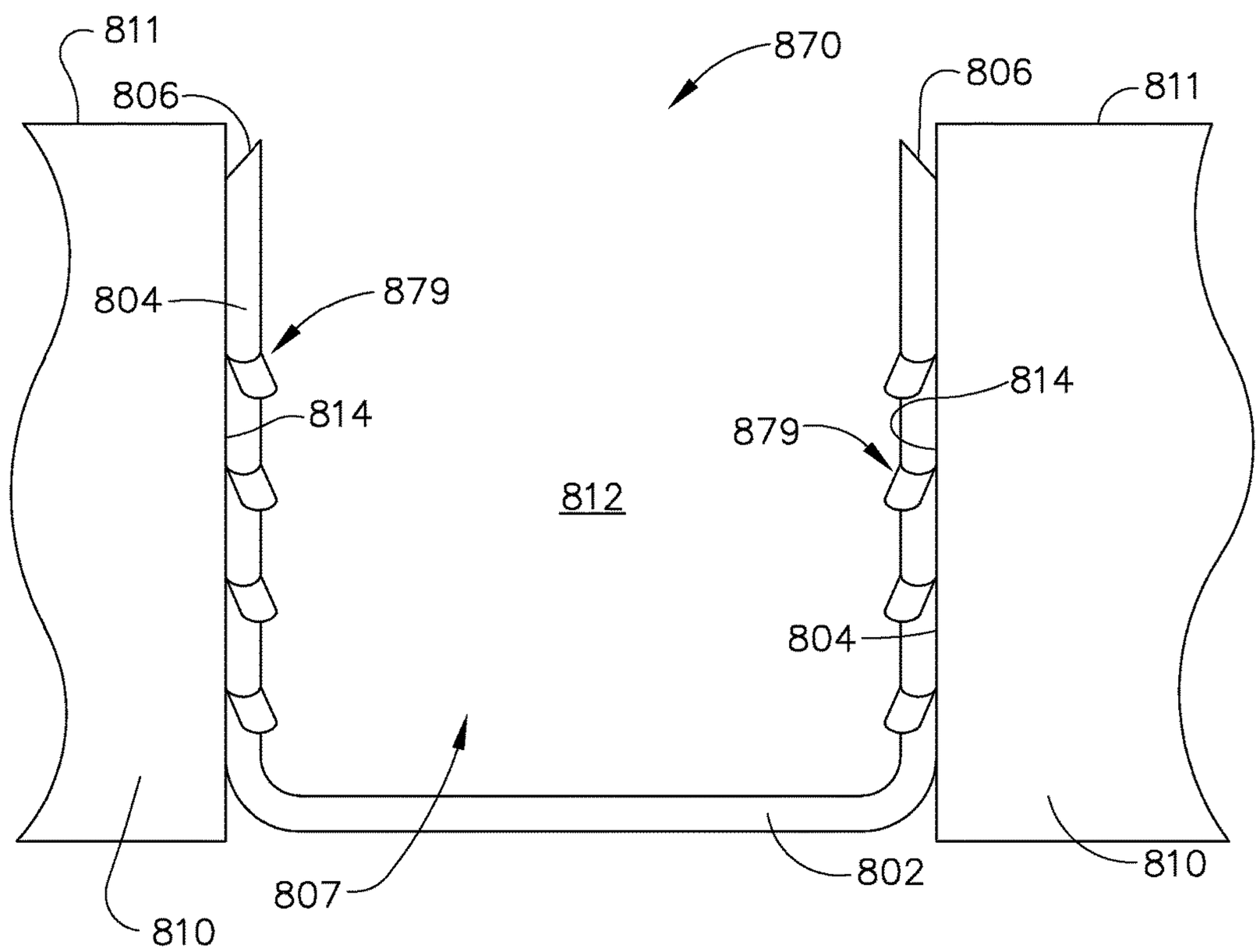
811
806
870
806
811
804
879
814
879
812
804
807
802
810
810

FIG. 68

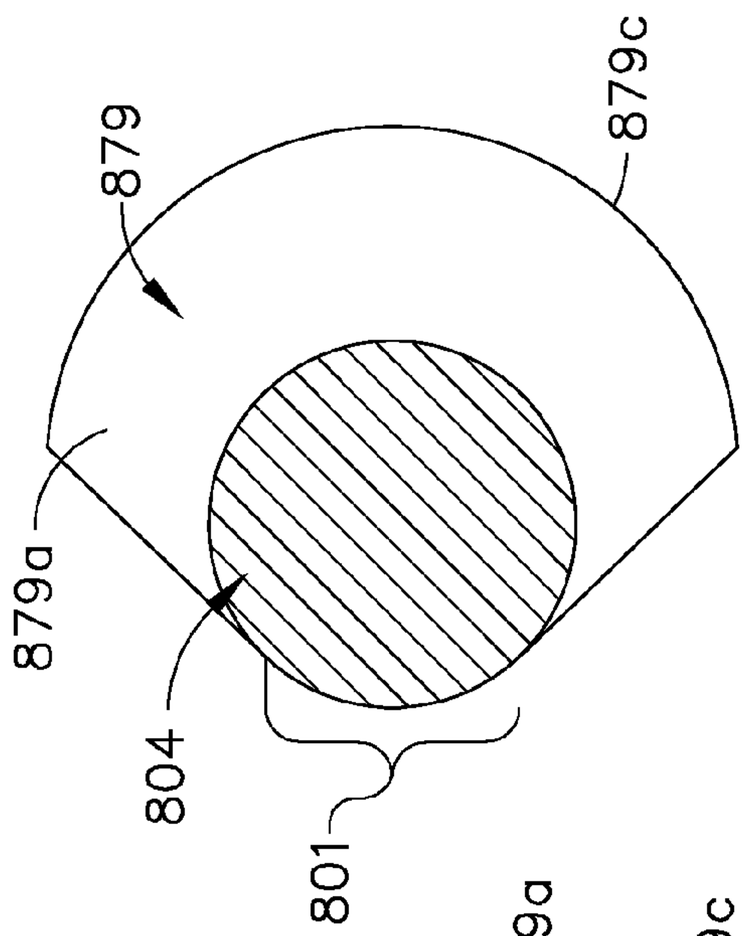

FIG. 71A

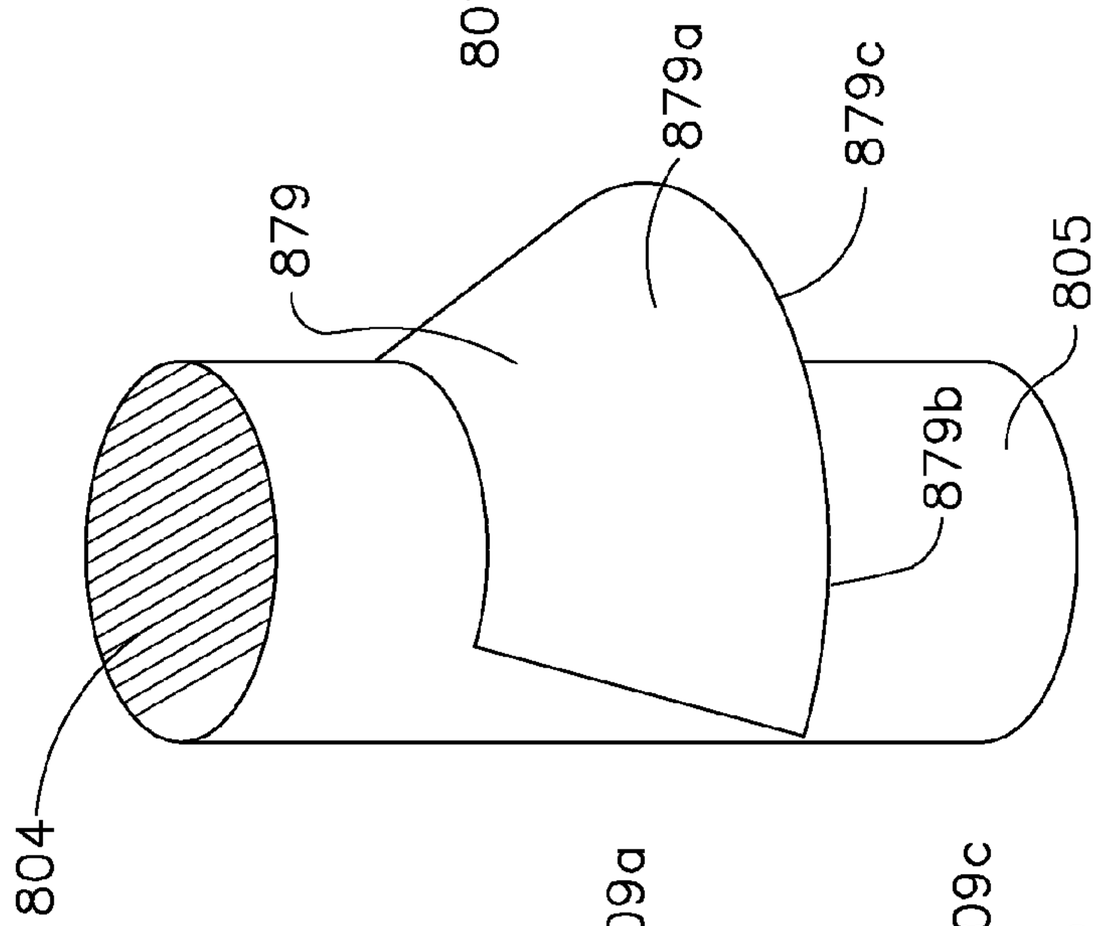

FIG. 71

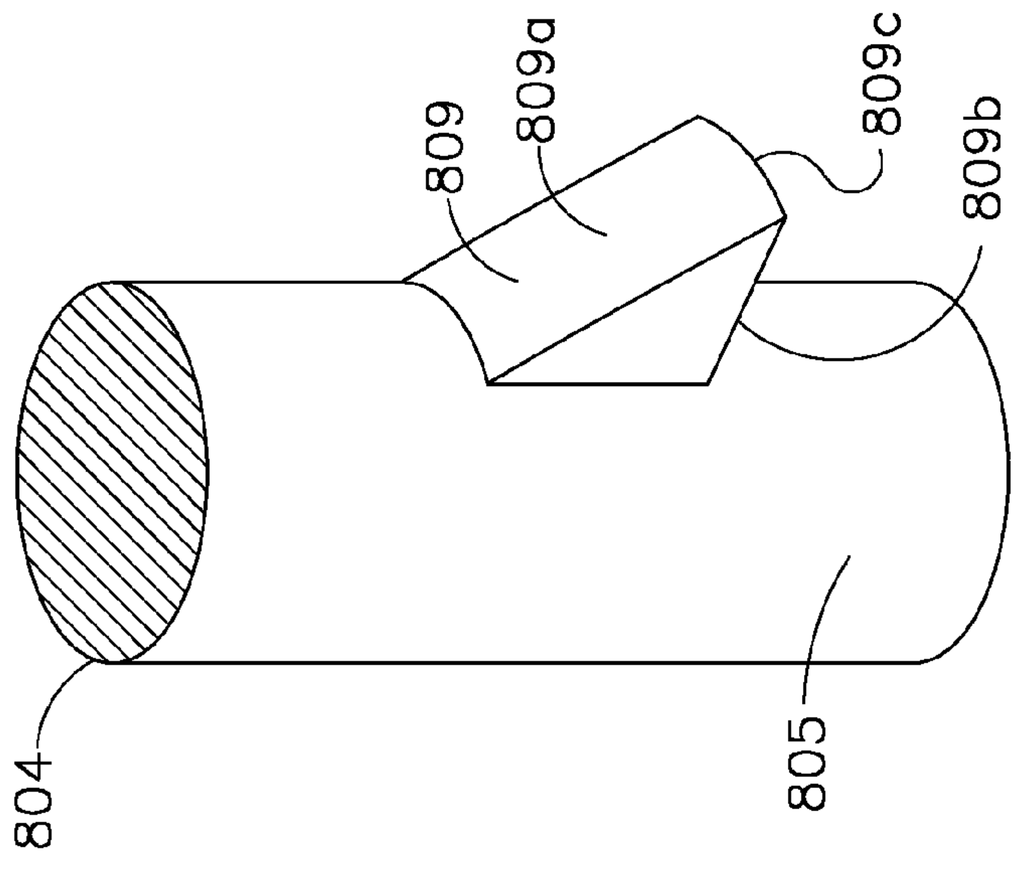

FIG. 70

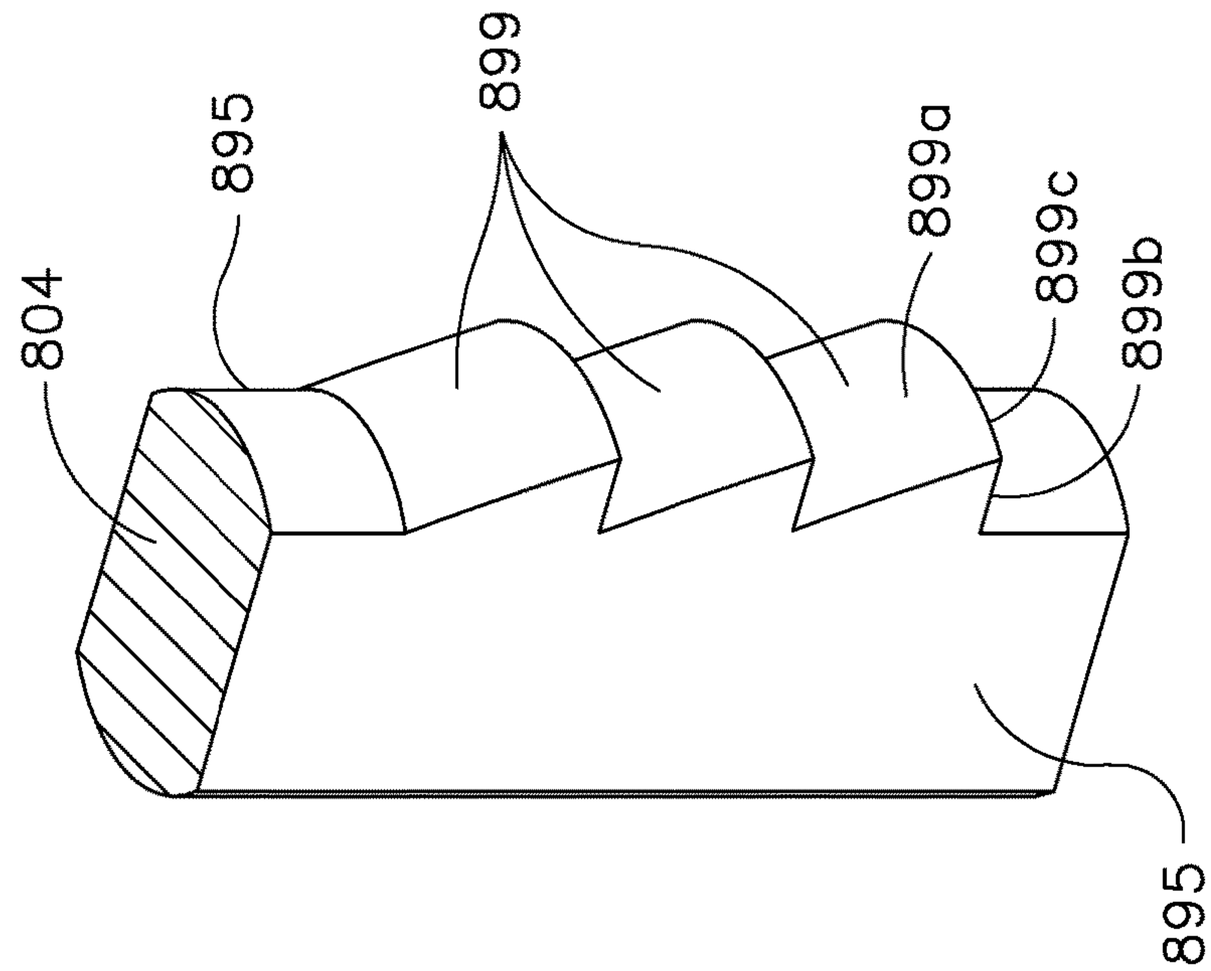

FIG. 73

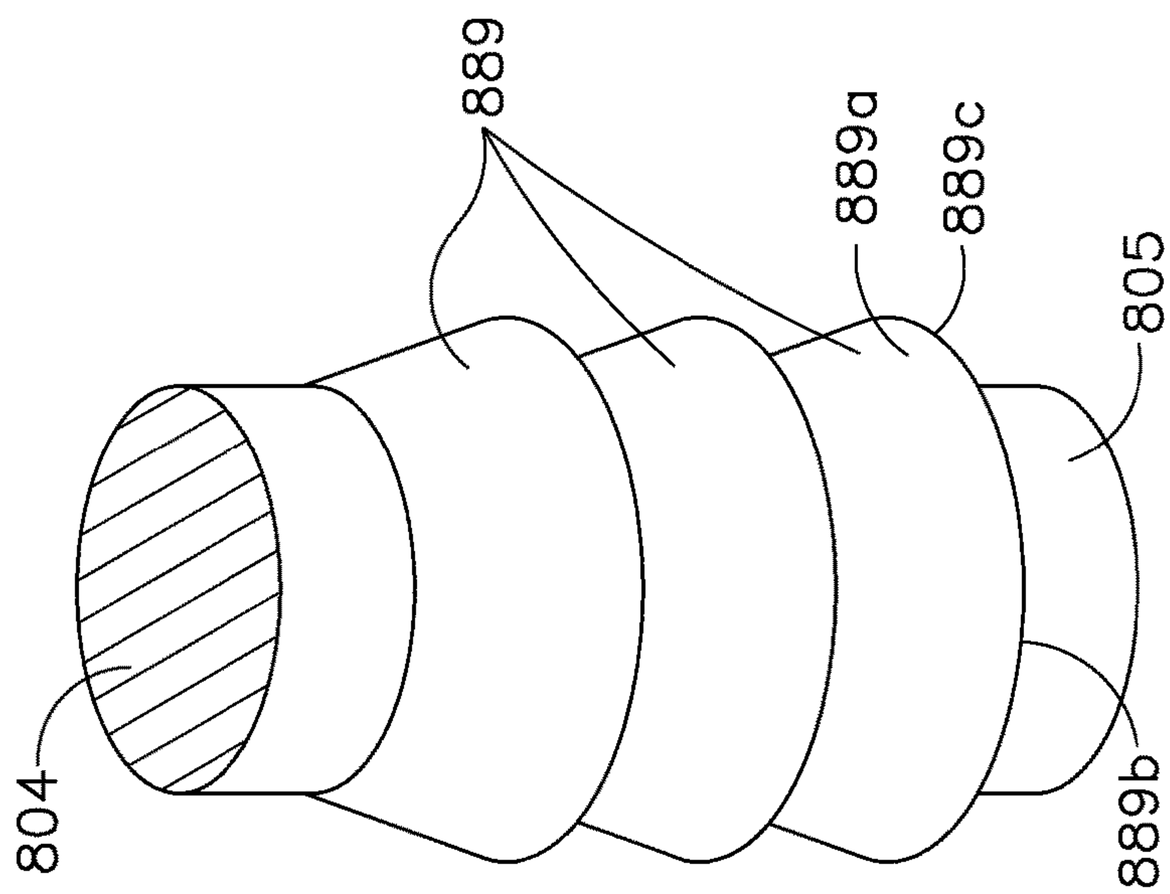

FIG. 72

IMPLANTABLE LAYERS AND METHODS FOR MODIFYING THE SHAPE OF THE IMPLANTABLE LAYERS FOR USE WITH A SURGICAL FASTENING INSTRUMENT

BACKGROUND

The present invention relates to surgical instruments and, in various arrangements, to surgical stapling and cutting instruments and staple cartridges therefor that are designed to staple and cut tissue.

BRIEF DESCRIPTION OF THE DRAWINGS

The features and advantages of this invention, and the manner of attaining them, will become more apparent and the invention itself will be better understood by reference to the following description of embodiments of the invention taken in conjunction with the accompanying drawings, wherein:

FIG. **1** is a left front perspective view of a surgical stapling and severing instrument with a handle portion;

FIG. **2** is a perspective view of a two-piece knife and firing bar ("E-beam") of the surgical stapling and severing instrument of FIG. **1**;

FIG. **3** is a perspective view of a wedge sled of a staple cartridge of a staple applying assembly;

FIG. **4** is a longitudinal cross-sectional view of an anvil in a closed position and a staple cartridge comprising a rigid support portion and a compressible tissue thickness compensator illustrated with staples being moved from an unfired position to a fired position during a first sequence;

FIG. **5** is another cross-sectional view of the anvil and the staple cartridge of FIG. **4** illustrating the anvil in an open position after the firing sequence has been completed;

FIG. **6** is an exploded perspective view of a tissue thickness compensator and a staple cartridge assembly;

FIG. **7** is a partial cross-sectional view of the staple cartridge assembly of FIG. **6**, illustrating unfired staples positioned in staple cavities of a staple cartridge body and partially embedded in a tissue thickness compensator;

FIG. **8** is a partial cross-sectional view of the staple cartridge assembly of FIG. **6**, illustrating fired staples ejected from the staple cavities of the staple cartridge body and formed against an anvil, and further illustrating the tissue thickness compensator and tissue captured within the staple entrapment area of the formed staples;

FIG. **9** is a partial perspective view of an end effector of a surgical fastening instrument illustrated with some portions removed and other portions illustrated in cross-section; moreover, a cutting member of the end effector is illustrated in a partially advanced position;

FIG. **10** is a partial cross-sectional end view of the end effector of FIG. **9** illustrated with patient tissue captured between an anvil and a tissue thickness compensator of the end effector; moreover, staples removably stored within a cartridge body of the end effector are illustrated in an unfired position and the cutting member of the end effector is illustrated in an unadvanced position which is proximal to the tissue thickness compensator;

FIG. **11** is a partial cross-sectional end view of the end effector of FIG. **9** illustrated with the staples in a fired position and the cutting member in a partially advanced position in which the patient tissue has been at least partially transected;

FIG. **12** is a partial cross-sectional end view of the end effector of FIG. **9** illustrated with the staples in a fired position and the cutting member in an advanced position in which at least a portion of the tissue thickness compensator has been transected by the cutting member;

FIG. **13** is a perspective view of a fastener cartridge including a tissue thickness compensator;

FIG. **14** is a cross-sectional view of the tissue thickness compensator of FIG. **13** illustrating a cutting member positioned relative to a proximal end of the tissue thickness compensator.

FIG. **15** is an exploded view of a tissue thickness compensator assembly;

FIG. **16** is a perspective view of layer of a tissue thickness compensator assembly;

FIG. **17** is a cross-sectional view of the tissue thickness compensator assembly of FIG. **15**;

FIG. **18** is a cross-sectional perspective view of an assembled tissue thickness compensator assembly and a mold for assembling the same;

FIG. **19** is a perspective view of the assembled tissue thickness compensator assembly of FIG. **18**;

FIG. **20** is a perspective view of a tissue thickness compensator assembly and a mold for assembling the same;

FIG. **21** is a perspective view of a tissue thickness compensator assembly and a mold for assembling the same;

FIG. **22** is a cross-sectional perspective view of the tissue thickness compensator assembly of FIG. **21** and the mold of FIG. **21** for assembling the same;

FIG. **23** is a perspective view of an end effector comprising a tissue thickness compensator;

FIG. **24** is a perspective view of the end effector and the tissue thickness compensator of FIG. **23** and a modifying member modifying the tissue thickness compensator;

FIG. **25** is a perspective view of the end effector of FIG. **23** comprising the modified tissue thickness compensator of FIG. **24**;

FIG. **26** is a cross-sectional perspective view of a tissue thickness compensator;

FIG. **27** is a cross-sectional perspective view of a mold for modifying the tissue thickness compensator of FIG. **26**;

FIG. **28** is a cross-sectional perspective view of the tissue thickness compensator of FIG. **26** after modification by the mold of FIG. **27**;

FIG. **29** is a cross-sectional perspective view of a tissue thickness compensator;

FIG. **30** is a cross-sectional perspective view of a mold for modifying the tissue thickness compensator of FIG. **29**;

FIG. **31** is a cross-sectional perspective view of the tissue thickness compensator of FIG. **29** after modification by the mold of FIG. **30**;

FIG. **32** is a cross-sectional perspective view of a tissue thickness compensator;

FIG. **33** is a cross-sectional perspective view of a mold for modifying the tissue thickness compensator of FIG. **32**;

FIG. **34** is a cross-sectional perspective view of the tissue thickness compensator of FIG. **32** after modification by the mold of FIG. **33**;

FIG. **35** is a cross-sectional perspective view of a tissue thickness compensator including a first height;

FIG. **36** is a cross-sectional perspective view of the tissue thickness compensator of FIG. **35** after modification to change the first height to a second height;

FIG. **37** is a cross-sectional view of a mold for modifying the tissue thickness compensator of FIG. **35**;

FIG. **38** is a cross-sectional perspective view of a tissue thickness compensator;

FIG. **39** is a cross-sectional perspective view the tissue thickness compensator of FIG. **38** after modification;

FIG. **40** is a graph illustrating the effect of compression forces on a spring rate of a tissue thickness compensator;

FIG. **41** is a cross-sectional perspective view of a tissue thickness compensator;

FIG. **42** is a cross-sectional perspective view of a space creator for modifying the tissue thickness compensator of FIG. **41**;

FIG. **43** is a cross-sectional perspective view of the tissue thickness compensator of FIG. **41** after modification by the space creator of FIG. **42**;

FIG. **44** is a partial cross-sectional elevational view of a fastener cartridge for use with a surgical instrument including a firing member in accordance with at least one embodiment illustrated with portions removed;

FIG. **45** is a partial cross-sectional elevational view depicting a tissue thickness compensator of the fastener cartridge of FIG. **44** being removed from the fastener cartridge and the firing member of FIG. **44** illustrated in a locked-out condition;

FIG. **46** is a partial perspective view of the tissue thickness compensator of FIG. **45**;

FIG. **47** is a partial perspective view a tissue thickness compensator in accordance with at least one embodiment;

FIG. **48** is a partial cross-sectional elevational view of an end effector of a surgical instrument comprising a fastener cartridge including the tissue thickness compensator of FIG. **47**, a sled, and a firing member supported by the sled illustrated with portions removed;

FIG. **49** is a partial cross-sectional elevational view of the end effector of FIG. **48** illustrating the firing member in a partially-fired position;

FIG. **50** is a partial cross-sectional elevational view of the end effector of FIG. **48** illustrating the tissue thickness compensator removed from the fastener cartridge and the firing member in a locked-out condition;

FIG. **51** is a partial perspective view of a fastener cartridge in accordance with at least one embodiment illustrated with portions removed;

FIG. **52** is a perspective view of a sled of the fastener cartridge of FIG. **51**;

FIG. **53** is a partial perspective view of the fastener cartridge of FIG. **51**;

FIG. **54** is an elevational view of a sled in accordance with at least one embodiment;

FIG. **55** is a perspective view of a sled in accordance with at least one embodiment illustrated in an unlocked configuration;

FIG. **56** is a perspective view of the sled of FIG. **55** illustrated in a locked-out configuration;

FIG. **57** is a partial cross-sectional elevational view of the sled of FIG. **55** positioned within a fastener cartridge illustrating the sled in its unlocked configuration, a firing member supported by the sled, and a tissue thickness compensator of the fastener cartridge engaged with the sled;

FIG. **58** is a partial cross-sectional elevational view of the tissue thickness compensator of FIG. **57** being removed from the fastener cartridge of FIG. **57** which has placed the sled of FIG. **55** in its locked-out configuration and the firing member of FIG. **57** in a locked-out condition;

FIG. **59** is a partial cross-sectional elevational view of a sled positioned at the proximal end of a fastener cartridge in accordance with at least one embodiment illustrated with portions removed;

FIG. **60** is a partial cross-sectional elevational view of the sled of FIG. **59** illustrated at the distal end of the fastener cartridge;

FIG. **61** is a perspective view of a sled in accordance with at least one embodiment;

FIG. **62** is a diagram depicting a staple comprising a plurality of barbs in accordance with at least one embodiment, wherein the staple is illustrated in an unformed configuration and a deformed configuration;

FIG. **63** is an elevational view of a staple comprising a plurality of barbs in accordance with at least one embodiment, wherein the staple is positioned within a staple cavity in an unfired position;

FIG. **64** is an elevational view of a staple including a plurality of barbs in accordance with at least one embodiment;

FIG. **65** is an elevational view of a staple including a plurality of barbs in accordance with at least one embodiment;

FIG. **66** is an elevational view of a staple including a plurality of barbs in accordance with at least one embodiment;

FIG. **67** is an elevational view of a staple including a plurality of barbs in accordance with at least one embodiment;

FIG. **68** is an elevational view of the staple including a plurality of barbs in accordance with at least one embodiment, wherein the staple is positioned within a staple cavity in an unfired position;

FIG. **69** is a plan view of the staple and the staple cavity of FIG. **68**;

FIG. **70** is a partial perspective view of a barbed staple leg in accordance with at least one embodiment;

FIG. **71** is a partial perspective view of a barbed staple leg of the staple of FIG. **68**;

FIG. **71**A is a cross-sectional plan view of the barbed staple leg of FIG. **71**;

FIG. **72** is a partial perspective view of a barbed staple leg in accordance with at least one embodiment; and

FIG. **73** is a partial perspective view of a barbed staple leg in accordance with at least one embodiment.

DETAILED DESCRIPTION

The Applicant of the present application also owns the U.S. Patent Applications identified below which are each herein incorporated by reference in their respective entirety:

U.S. patent application Ser. No. 12/894,311, entitled SURGICAL INSTRUMENTS WITH RECONFIGURABLE SHAFT SEGMENTS; now U.S. Pat. No. 8,763,877;

U.S. patent application Ser. No. 12/894,340, entitled SURGICAL STAPLE CARTRIDGES SUPPORTING NON-LINEARLY ARRANGED STAPLES AND SURGICAL STAPLING INSTRUMENTS WITH COMMON STAPLE-FORMING POCKETS; now U.S. Pat. No. 8,899,463;

U.S. patent application Ser. No. 12/894,327, entitled JAW CLOSURE ARRANGEMENTS FOR SURGICAL INSTRUMENTS; now U.S. Pat. No. 8,978,956;

U.S. patent application Ser. No. 12/894,351, entitled SURGICAL CUTTING AND FASTENING INSTRUMENTS WITH SEPARATE AND DISTINCT FASTENER DEPLOYMENT AND TISSUE CUTTING SYSTEMS; now U.S. Pat. No. 9,113,864;

U.S. patent application Ser. No. 12/894,338, entitled IMPLANTABLE FASTENER CARTRIDGE HAVING A NON-UNIFORM ARRANGEMENT; now U.S. Pat. No. 8,864,007;

U.S. patent application Ser. No. 12/894,369, entitled IMPLANTABLE FASTENER CARTRIDGE COMPRISING A SUPPORT RETAINER; now U.S. Patent Publication No. 2012/0080344;

U.S. patent application Ser. No. 12/894,312, entitled IMPLANTABLE FASTENER CARTRIDGE COMPRISING MULTIPLE LAYERS; now U.S. Pat. No. 8,925,782;

U.S. patent application Ser. No. 12/894,377, entitled SELECTIVELY ORIENTABLE IMPLANTABLE FASTENER CARTRIDGE; now U.S. Pat. No. 8,393,514;

U.S. patent application Ser. No. 12/894,339, entitled SURGICAL STAPLING INSTRUMENT WITH COMPACT ARTICULATION CONTROL ARRANGEMENT; now U.S. Pat. No. 8,840,003;

U.S. patent application Ser. No. 12/894,360, entitled SURGICAL STAPLING INSTRUMENT WITH A VARIABLE STAPLE FORMING SYSTEM; now U.S. Pat. No. 9,113,862;

U.S. patent application Ser. No. 12/894,322, entitled SURGICAL STAPLING INSTRUMENT WITH INTERCHANGEABLE STAPLE CARTRIDGE ARRANGEMENTS; now U.S. Pat. No. 8,740,034;

U.S. patent application Ser. No. 12/894,350, entitled SURGICAL STAPLE CARTRIDGES WITH DETACHABLE SUPPORT STRUCTURES; now U.S. Patent Publication No. 2012/0080478;

U.S. patent application Ser. No. 12/894,383, entitled IMPLANTABLE FASTENER CARTRIDGE COMPRISING BIOABSORBABLE LAYERS; now U.S. Pat. No. 8,752,699;

U.S. patent application Ser. No. 12/894,389, entitled COMPRESSIBLE FASTENER CARTRIDGE; now U.S. Pat. No. 8,740,037;

U.S. patent application Ser. No. 12/894,345, entitled FASTENERS SUPPORTED BY A FASTENER CARTRIDGE SUPPORT; now U.S. Pat. No. 8,783,542;

U.S. patent application Ser. No. 12/894,306, entitled COLLAPSIBLE FASTENER CARTRIDGE; now U.S. Pat. No. 9,044,227;

U.S. patent application Ser. No. 12/894,318, entitled FASTENER SYSTEM COMPRISING A PLURALITY OF CONNECTED RETENTION MATRIX ELEMENTS; now U.S. Pat. No. 8,814,024;

U.S. patent application Ser. No. 12/894,330, entitled FASTENER SYSTEM COMPRISING A RETENTION MATRIX AND AN ALIGNMENT MATRIX; now U.S. Pat. No. 8,757,465;

U.S. patent application Ser. No. 12/894,361, entitled FASTENER SYSTEM COMPRISING A RETENTION MATRIX; now U.S. Pat. No. 8,529,600;

U.S. patent application Ser. No. 12/894,367, entitled FASTENING INSTRUMENT FOR DEPLOYING A FASTENER SYSTEM COMPRISING A RETENTION MATRIX; now U.S. Pat. No. 9,033,203;

U.S. patent application Ser. No. 12/894,388, entitled FASTENER SYSTEM COMPRISING A RETENTION MATRIX AND A COVER; now U.S. Pat. No. 8,474,677;

U.S. patent application Ser. No. 12/894,376, entitled FASTENER SYSTEM COMPRISING A PLURALITY OF FASTENER CARTRIDGES; now U.S. Pat. No. 9,044,228;

U.S. patent application Ser. No. 13/097,865, entitled SURGICAL STAPLER ANVIL COMPRISING A PLURALITY OF FORMING POCKETS; now U.S. Pat. No. 9,295,464;

U.S. patent application Ser. No. 13/097,936, entitled TISSUE THICKNESS COMPENSATOR FOR A SURGICAL STAPLER; now U.S. Pat. No. 8,657,176;

U.S. patent application Ser. No. 13/097,954, entitled STAPLE CARTRIDGE COMPRISING A VARIABLE THICKNESS COMPRESSIBLE PORTION; now U.S. Patent Publication No. 2012/0080340;

U.S. patent application Ser. No. 13/097,856, entitled STAPLE CARTRIDGE COMPRISING STAPLES POSITIONED WITHIN A COMPRESSIBLE PORTION THEREOF; now U.S. Patent Publication No. 2012/0080336;

U.S. patent application Ser. No. 13/097,928, entitled TISSUE THICKNESS COMPENSATOR COMPRISING DETACHABLE PORTIONS; now U.S. Pat. No. 8,746,535;

U.S. patent application Ser. No. 13/097,891, entitled TISSUE THICKNESS COMPENSATOR FOR A SURGICAL STAPLER COMPRISING AN ADJUSTABLE ANVIL; now U.S. Pat. No. 8,864,009;

U.S. patent application Ser. No. 13/097,948, entitled STAPLE CARTRIDGE COMPRISING AN ADJUSTABLE DISTAL PORTION; now U.S. Pat. No. 8,978,954;

U.S. patent application Ser. No. 13/097,907, entitled COMPRESSIBLE STAPLE CARTRIDGE ASSEMBLY; now U.S. Pat. No. 9,301,755;

U.S. patent application Ser. No. 13/097,861, entitled TISSUE THICKNESS COMPENSATOR COMPRISING PORTIONS HAVING DIFFERENT PROPERTIES; now U.S. Pat. No. 9,113,865;

U.S. patent application Ser. No. 13/097,869, entitled STAPLE CARTRIDGE LOADING ASSEMBLY; now U.S. Pat. No. 8,857,694;

U.S. patent application Ser. No. 13/097,917, entitled COMPRESSIBLE STAPLE CARTRIDGE COMPRISING ALIGNMENT MEMBERS; now U.S. Pat. No. 8,777,004;

U.S. patent application Ser. No. 13/097,873, entitled STAPLE CARTRIDGE COMPRISING A RELEASABLE PORTION; now U.S. Pat. No. 8,740,038;

U.S. patent application Ser. No. 13/097,938, entitled STAPLE CARTRIDGE COMPRISING COMPRESSIBLE DISTORTION RESISTANT COMPONENTS; now U.S. Pat. No. 9,016,542;

U.S. patent application Ser. No. 13/097,924, entitled STAPLE CARTRIDGE COMPRISING A TISSUE THICKNESS COMPENSATOR; now U.S. Pat. No. 9,168,038;

U.S. patent application Ser. No. 13/242,029, entitled SURGICAL STAPLER WITH FLOATING ANVIL; now U.S. Pat. No. 8,893,949;

U.S. patent application Ser. No. 13/242,066, entitled CURVED END EFFECTOR FOR A STAPLING INSTRUMENT; now U.S. Patent Publication No. 2012/0080498;

U.S. patent application Ser. No. 13/242,086, entitled STAPLE CARTRIDGE INCLUDING COLLAPSIBLE DECK; now U.S. Pat. No. 9,055,941;

U.S. patent application Ser. No. 13/241,912, entitled STAPLE CARTRIDGE INCLUDING COLLAPSIBLE DECK ARRANGEMENT; now U.S. Pat. No. 9,050,084;

U.S. patent application Ser. No. 13/241,922, entitled SURGICAL STAPLER WITH STATIONARY STAPLE DRIVERS; now U.S. Pat. No. 9,216,019;

U.S. patent application Ser. No. 13/241,637, entitled SURGICAL INSTRUMENT WITH TRIGGER ASSEMBLY FOR GENERATING MULTIPLE ACTUATION MOTIONS; now U.S. Pat. No. 8,789,741;

U.S. patent application Ser. No. 13/241,629, entitled SURGICAL INSTRUMENT WITH SELECTIVELY ARTICULATABLE END EFFECTOR; now U.S. Patent Publication No. 2012/0074200;

U.S. application Ser. No. 13/433,096, entitled TISSUE THICKNESS COMPENSATOR COMPRISING A PLURALITY OF CAPSULES; now U.S. Pat. No. 9,301,752;

U.S. application Ser. No. 13/433,103, entitled TISSUE THICKNESS COMPENSATOR COMPRISING A PLURALITY OF LAYERS; now U.S. Pat. No. 9,433,419;

U.S. application Ser. No. 13/433,098, entitled EXPANDABLE TISSUE THICKNESS COMPENSATOR; now U.S. Pat. No. 9,301,753;

U.S. application Ser. No. 13/433,102, entitled TISSUE THICKNESS COMPENSATOR COMPRISING A RESERVOIR; now U.S. Pat. No. 9,232,941;

U.S. application Ser. No. 13/433,114, entitled RETAINER ASSEMBLY INCLUDING A TISSUE THICKNESS COMPENSATOR; now U.S. Pat. No. 9,386,988;

U.S. application Ser. No. 13/433,136, entitled TISSUE THICKNESS COMPENSATOR COMPRISING AT LEAST ONE MEDICAMENT; now U.S. Patent Publication No. 2012/0241492;

U.S. application Ser. No. 13/433,141, entitled TISSUE THICKNESS COMPENSATOR COMPRISING CONTROLLED RELEASE AND EXPANSION; now U.S. Patent Publication No. 2012/0241493;

U.S. application Ser. No. 13/433,144, entitled TISSUE THICKNESS COMPENSATOR COMPRISING FIBERS TO PRODUCE A RESILIENT LOAD; now U.S. Pat. No. 9,277,919;

U.S. application Ser. No. 13/433,148, entitled TISSUE THICKNESS COMPENSATOR COMPRISING STRUCTURE TO PRODUCE A RESILIENT LOAD; now U.S. Pat. No. 9,220,500;

U.S. application Ser. No. 13/433,155, entitled TISSUE THICKNESS COMPENSATOR COMPRISING RESILIENT MEMBERS; now U.S. Pat. No. 9,480,476;

U.S. application Ser. No. 13/433,163, entitled METHODS FOR FORMING TISSUE THICKNESS COMPENSATOR ARRANGEMENTS FOR SURGICAL STAPLERS; now U.S. Patent Publication No. 2012/0248169;

U.S. application Ser. No. 13/433,167, entitled TISSUE THICKNESS COMPENSATORS; now U.S. Pat. No. 9,220,501;

U.S. application Ser. No. 13/433,175, entitled LAYERED TISSUE THICKNESS COMPENSATOR; now U.S. Pat. No. 9,332,974;

U.S. application Ser. No. 13/433,179, entitled TISSUE THICKNESS COMPENSATORS FOR CIRCULAR SURGICAL STAPLERS; now U.S. Pat. No. 9,364,233;

U.S. application Ser. No. 13/763,028, entitled ADHESIVE FILM LAMINATE; now U.S. Pat. No. 9,282,962;

U.S. application Ser. No. 13/433,115, entitled TISSUE THICKNESS COMPENSATOR COMPRISING CAPSULES DEFINING A LOW PRESSURE ENVIRONMENT; now U.S. Pat. No. 9,204,880;

U.S. application Ser. No. 13/433,118, entitled TISSUE THICKNESS COMPENSATOR COMPRISED OF A PLURALITY OF MATERIALS; now U.S. Pat. No. 9,414,838;

U.S. application Ser. No. 13/433,135, entitled MOVABLE MEMBER FOR USE WITH A TISSUE THICKNESS COMPENSATOR; now U.S. Pat. No. 9,517,063;

U.S. application Ser. No. 13/433,140, entitled TISSUE THICKNESS COMPENSATOR AND METHOD FOR MAKING THE SAME; now U.S. Pat. No. 9,241,714;

U.S. application Ser. No. 13/433,129, entitled TISSUE THICKNESS COMPENSATOR COMPRISING A PLURALITY OF MEDICAMENTS; now U.S. Pat. No. 9,211,120;

U.S. application Ser. No. 11/216,562, entitled STAPLE CARTRIDGES FOR FORMING STAPLES HAVING DIFFERING FORMED STAPLE HEIGHTS, now U.S. Pat. No. 7,669,746;

U.S. application Ser. No. 11/714,049, entitled SURGICAL STAPLING DEVICE WITH ANVIL HAVING STAPLE FORMING POCKETS OF VARYING DEPTHS, now U.S. Patent Publication No. 2007/0194082;

U.S. application Ser. No. 11/711,979, entitled SURGICAL STAPLING DEVICES THAT PRODUCE FORMED STAPLES HAVING DIFFERENT LENGTHS, now U.S. Pat. No. 8,317,070;

U.S. application Ser. No. 11/711,975, entitled SURGICAL STAPLING DEVICE WITH STAPLE DRIVERS OF DIFFERENT HEIGHT, now U.S. Patent Publication No. 2007/0194079;

U.S. application Ser. No. 11/711,977, entitled SURGICAL STAPLING DEVICE WITH STAPLE DRIVER THAT SUPPORTS MULTIPLE WIRE DIAMETER STAPLES, now U.S. Pat. No. 7,673,781;

U.S. application Ser. No. 11/712,315, entitled SURGICAL STAPLING DEVICE WITH MULTIPLE STACKED ACTUATOR WEDGE CAMS FOR DRIVING STAPLE DRIVERS, now U.S. Pat. No. 7,500,979;

U.S. application Ser. No. 12/038,939, entitled STAPLE CARTRIDGES FOR FORMING STAPLES HAVING DIFFERING FORMED STAPLE HEIGHTS, now U.S. Pat. No. 7,934,630;

U.S. application Ser. No. 13/020,263, entitled SURGICAL STAPLING SYSTEMS THAT PRODUCE FORMED STAPLES HAVING DIFFERENT LENGTHS, now U.S. Pat. No. 8,636,187;

U.S. application Ser. No. 13/118,278, entitled ROBOTICALLY-CONTROLLED SURGICAL STAPLING DEVICES THAT PRODUCE FORMED STAPLES HAVING DIFFERENT LENGTHS, now U.S. Pat. No. 9,237,891;

U.S. application Ser. No. 13/369,629, entitled ROBOTICALLY-CONTROLLED CABLE-BASED SURGICAL END EFFECTORS, now U.S. Pat. No. 8,800,838;

U.S. application Ser. No. 12/695,359, entitled SURGICAL STAPLING DEVICES FOR FORMING STAPLES WITH DIFFERENT FORMED HEIGHTS, now U.S. Pat. No. 8,464,923;

U.S. application Ser. No. 13/072,923, entitled STAPLE CARTRIDGES FOR FORMING STAPLES HAVING DIFFERING FORMED STAPLE HEIGHTS, now U.S. Pat. No. 8,567,656;

U.S. application Ser. No. 13/766,325, entitled LAYER OF MATERIAL FOR A SURGICAL END EFFECTOR; now U.S. Patent Publication No. 2013/0256380;

U.S. application Ser. No. 13/763,078, entitled ANVIL LAYER ATTACHED TO A PROXIMAL END OF AN END EFFECTOR; now U.S. Patent Publication No. 2013/0256383;

U.S. application Ser. No. 13/763,094, entitled LAYER COMPRISING DEPLOYABLE ATTACHMENT MEMBERS; now U.S. Patent Publication No. 2013/0256377;

U.S. application Ser. No. 13/763,106, entitled END EFFECTOR COMPRISING A DISTAL TISSUE ABUTMENT MEMBER; now U.S. Patent Publication No. 2013/0256378;

U.S. application Ser. No. 13/433,147, entitled TISSUE THICKNESS COMPENSATOR COMPRISING CHANNELS; now U.S. Pat. No. 9,351,730;

U.S. application Ser. No. 13/763,112, entitled SURGICAL STAPLING CARTRIDGE WITH LAYER RETENTION FEATURES; now U.S. Patent Publication No. 2013/0256379;

U.S. application Ser. No. 13/763,035, entitled ACTUATOR FOR RELEASING A TISSUE THICKNESS COMPENSATOR FROM A FASTENER CARTRIDGE; now U.S. Patent Publication No. 2013/0214030;

U.S. application Ser. No. 13/763,042, entitled RELEASABLE TISSUE THICKNESS COMPENSATOR AND FASTENER CARTRIDGE HAVING THE SAME; now U.S. Patent Publication No. 2013/0221063;

U.S. application Ser. No. 13/763,048, entitled FASTENER CARTRIDGE COMPRISING A RELEASABLE TISSUE THICKNESS COMPENSATOR; now U.S. Patent Publication No. 2013/0221064;

U.S. application Ser. No. 13/763,054, entitled FASTENER CARTRIDGE COMPRISING A CUTTING MEMBER FOR RELEASING A TISSUE THICKNESS COMPENSATOR, now U.S. Pat. No. 9,272,406;

U.S. application Ser. No. 13/763,065, entitled FASTENER CARTRIDGE COMPRISING A RELEASABLY ATTACHED TISSUE THICKNESS COMPENSATOR; now U.S. Pat. No. 9,566,061;

U.S. application Ser. No. 13/763,021, entitled STAPLE CARTRIDGE COMPRISING A RELEASABLE COVER, now U.S. Pat. No. 9,386,984;

U.S. application Ser. No. 13/763,078, entitled ANVIL LAYER ATTACHED TO A PROXIMAL END OF AN END EFFECTOR; now U.S. Patent Publication No. 2013/0256383;

U.S. application Ser. No. 13/763,095, entitled LAYER ARRANGEMENTS FOR SURGICAL STAPLE CARTRIDGES; now U.S. Patent Publication No. 2013/0161374;

U.S. application Ser. No. 13/463,147, entitled IMPLANTABLE ARRANGEMENTS FOR SURGICAL STAPLE CARTRIDGES; now U.S. Patent Publication No. 2013/0292398;

U.S. application Ser. No. 13/763,192, entitled MULTIPLE THICKNESS IMPLANTABLE LAYERS FOR SURGICAL STAPLING DEVICES; now U.S. Patent Publication No. 2013/0146642;

U.S. application Ser. No. 13/763,161, entitled RELEASABLE LAYER OF MATERIAL AND SURGICAL END EFFECTOR HAVING THE SAME; now U.S. Patent Publication No. 2013/0153641;

U.S. application Ser. No. 13/763,177, entitled ACTUATOR FOR RELEASING A LAYER OF MATERIAL FROM A SURGICAL END EFFECTOR; now U.S. Patent Publication No. 2013/0146641;

U.S. application Ser. No. 13/763,037, entitled STAPLE CARTRIDGE COMPRISING A COMPRESSIBLE PORTION, now U.S. Patent Publication No. 2014/0224857;

U.S. application Ser. No. 13/433,126, entitled TISSUE THICKNESS COMPENSATOR COMPRISING TISSUE INGROWTH FEATURES; now U.S. Pat. No. 9,320,523;

U.S. application Ser. No. 13/433,132, entitled DEVICES AND METHODS FOR ATTACHING TISSUE THICKNESS COMPENSATING MATERIALS TO SURGICAL STAPLING INSTRUMENTS; now U.S. Patent Publication No. 2013/0256373.

U.S. application Ser. No. 13/851,703, entitled FASTENER CARTRIDGE COMPRISING A TISSUE THICKNESS COMPENSATOR INCLUDING OPENINGS THEREIN, now U.S. Pat. No. 9,572,577;

U.S. application Ser. No. 13/851,676, entitled TISSUE THICKNESS COMPENSATOR COMPRISING A CUTTING MEMBER PATH, now U.S. Patent Publication No. 2014/0291379;

U.S. application Ser. No. 13/851,693, entitled FASTENER CARTRIDGE ASSEMBLIES, now U.S. Pat. No. 9,332,984; and

U.S. application Ser. No. 13/851,684, entitled FASTENER CARTRIDGE COMPRISING A TISSUE THICKNESS COMPENSATOR AND A GAP SETTING ELEMENT, now U.S. Patent Publication No. 2014/0291380.

Applicant of the present application also owns the following patent applications that were filed on even date herewith and which are each herein incorporated by reference in their respective entireties:

U.S. patent application Ser. No. 14/187,387, entitled STAPLE CARTRIDGE INCLUDING A BARBED STAPLE, now U.S. Patent Publication No. 2014/0166724;

U.S. patent application Ser. No. 14/187,395, entitled STAPLE CARTRIDGE INCLUDING A BARBED STAPLE, now U.S. Patent Publication No. 2014/0166725;

U.S. patent application Ser. No. 14/187,400, entitled STAPLE CARTRIDGE INCLUDING A BARBED STAPLE, now U.S. Patent Publication No. 2014/0166726;

U.S. patent application Ser. No. 14/187,383, entitled IMPLANTABLE LAYERS AND METHODS FOR ALTERING IMPLANTABLE LAYERS FOR USE WITH SURGICAL FASTENING INSTRUMENTS, now U.S. Patent Publication No. 2015/0238185;

U.S. patent application Ser. No. 14/187,386, entitled IMPLANTABLE LAYERS AND METHODS FOR ALTERING ONE OR MORE PROPERTIES OF IMPLANTABLE LAYERS FOR USE WITH FASTENING INSTRUMENTS, now U.S. Patent Publication No. 2015/0239180;

U.S. patent application Ser. No. 14/187,389, entitled IMPLANTABLE LAYER ASSEMBLIES, now U.S. Patent Publication 2015/0238187;

U.S. patent application Ser. No. 14/187,385, entitled IMPLANTABLE LAYERS COMPRISING A PRESSED REGION, now U.S. Patent Publication No. 2015/0238191; and

U.S. patent application Ser. No. 14/187,384, entitled FASTENING SYSTEM COMPRISING A FIRING MEMBER LOCKOUT, now U.S. Patent Publication No. 2015/0238186.

Certain exemplary embodiments will now be described to provide an overall understanding of the principles of the structure, function, manufacture, and use of the devices and methods disclosed herein. One or more examples of these embodiments are illustrated in the accompanying drawings. Those of ordinary skill in the art will understand that the devices and methods specifically described herein and illustrated in the accompanying drawings are non-limiting exemplary embodiments and that the scope of the various embodiments of the present invention is defined solely by the claims. The features illustrated or described in connection with one exemplary embodiment may be combined with the features of other embodiments. Such modifications and variations are intended to be included within the scope of the present invention.

The terms "comprise" (and any form of comprise, such as "comprises" and "comprising"), "have" (and any form of have, such as "has" and "having"), "include" (and any form of include, such as "includes" and "including") and "contain" (and any form of contain, such as "contains" and "containing") are open-ended linking verbs. As a result, a

surgical system, device, or apparatus that "comprises," "has," "includes" or "contains" one or more elements possesses those one or more elements, but is not limited to possessing only those one or more elements. Likewise, an element of a system, device, or apparatus that "comprises," "has," "includes" or "contains" one or more features possesses those one or more features, but is not limited to possessing only those one or more features.

The terms "proximal" and "distal" are used herein with reference to a clinician manipulating the handle portion of the surgical instrument. The term "proximal" referring to the portion closest to the clinician and the term "distal" referring to the portion located away from the clinician. It will be further appreciated that, for convenience and clarity, spatial terms such as "vertical", "horizontal", "up", and "down" may be used herein with respect to the drawings. However, surgical instruments are used in many orientations and positions, and these terms are not intended to be limiting and/or absolute.

Various exemplary devices and methods are provided for performing laparoscopic and minimally invasive surgical procedures. However, the person of ordinary skill in the art will readily appreciate that the various methods and devices disclosed herein can be used in numerous surgical procedures and applications including, for example, in connection with open surgical procedures. As the present Detailed Description proceeds, those of ordinary skill in the art will further appreciate that the various instruments disclosed herein can be inserted into a body in any way, such as through a natural orifice, through an incision or puncture hole formed in tissue, etc. The working portions or end effector portions of the instruments can be inserted directly into a patient's body or can be inserted through an access device that has a working channel through which the end effector and elongated shaft of a surgical instrument can be advanced.

Turning to the Drawings wherein like numerals denote like components throughout the several views, FIG. **1** illustrates an exemplary surgical stapling and severing instrument **8010** suitable for use with a tissue thickness compensator assembly as described in greater detail below. The surgical stapling and severing instrument **8010** can comprise an anvil **8014** which may be repeatedly opened and closed about its pivotal attachment to an elongate staple channel **8016**. A staple applying assembly **8012** may comprise the anvil **8014** and the channel **8016**, wherein the assembly **8012** can be proximally attached to an elongate shaft **8018** forming an implement portion **8022**. When the staple applying assembly **8012** is closed, or at least substantially closed, the implement portion **8022** can present a sufficiently small cross-section suitable for inserting the staple applying assembly **8012** through a trocar. In various circumstances, the assembly **8012** can be manipulated by a handle **8020** connected to the shaft **8018**. The handle **8020** can comprise user controls such as a rotation knob **8030** that rotates the elongate shaft **8018** and the staple applying assembly **8012** about a longitudinal axis of the shaft **8018**. A closure trigger **8026**, which can pivot in front of a pistol grip **8036** to close the staple applying assembly **8012**. A closure release button **8038** can be outwardly presented on the handle **8020** when the closure trigger **8026** is clamped such that the release button **8038** can be depressed to unclamp the closure trigger **8026** and open the staple applying assembly **8012**, for example. A firing trigger **8034**, which can pivot in front of the closure trigger **8026**, can cause the staple applying assembly **8012** to simultaneously sever and staple tissue clamped therein. In various circumstances, multiple firing strokes can be employed using the firing trigger **8034** to reduce the amount of force required to be applied by the surgeon's hand per stroke. In certain embodiments, the handle **8020** can comprise one or more rotatable indicator wheels such as, for example, rotatable indicator wheel **8041** which can indicate the firing progress. A manual firing release lever **8042** can allow the firing system to be retracted before full firing travel has been completed, if desired, and, in addition, the firing release lever **8042** can allow a surgeon, or other clinician, to retract the firing system in the event that the firing system binds and/or fails. Additional details on the surgical stapling and severing instrument **8010** and other surgical stapling and severing instruments suitable for use with the present disclosure are described, for example, in U.S. patent application Ser. No. 13/851,693, entitled FASTENER CARTRIDGE ASSEMBLY, and filed on Mar. 27, 2013, the entire disclosure of which is incorporated herein by reference. Furthermore, powered surgical stapling and severing instruments can also be utilized with the present disclosure. See, for example, U.S. Patent Application Publication No. 2009/0090763 A1, entitled POWERED SURGICAL STAPLING DEVICE, and filed on Aug. 8, 2008, the entire disclosure of which is incorporated herein by reference.

With reference to FIGS. **2** and **3**, a firing assembly such as, for example, firing assembly **9090** can be utilized with the surgical stapling and severing instrument **8010** to advance a wedge sled **9126** which comprises a plurality of wedges **9204** configured to deploy staples from the staple applying assembly **8012** into tissue captured between the anvil **8014** and the elongate staple channel **8016**. Furthermore, an E-beam **9102** at a distal portion of the firing assembly **9090** may facilitate separate closure and firing as well as spacing of the anvil **8014** from the elongate staple channel **8016** during firing. The E-beam **9102** may include a pair of top pins **9110**, a pair of middle pins **9112** which may follow portion **9218** of the wedge sled **9126**, and a bottom pin or foot **9114**, as well as a sharp cutting edge **9116** which can be configured to sever the captured tissue as the firing assembly **9090** is advanced distally. In addition, integrally formed and proximally projecting top guide **9118** and middle guide **9120** bracketing each vertical end of the cutting edge **9116** may further define a tissue staging area **9122** assisting in guiding tissue to the sharp cutting edge **9116** prior to being severed. The middle guide **9120** may also serve to engage and fire the staple applying assembly **8012** by abutting a stepped central member **9124** of the wedge sled **9126** (FIG. **2**) that effects staple formation by the staple applying assembly **8012**.

In various circumstances, a staple cartridge can comprise means for compensating for thickness of tissue captured within staples deployed from a staple cartridge. Referring to FIG. **4**, a staple cartridge, such as staple cartridge **10000**, for example, can be utilized with the surgical stapling and severing instrument **8010** and can include a rigid first portion, such as support portion **10010**, for example, and a compressible second portion, such as tissue thickness compensator **10020**, for example. The support portion **10010** can comprise a cartridge body and a plurality of staple cavities **10012**. A staple **10030**, for example, can be removably positioned in each staple cavity **10012**. Referring primarily to FIGS. **4** and **5**, each staple **10030** can comprise a base **10031** and one or more legs **10032** extending from the base **10031**. Prior to the staples **10030** being deployed, the bases **10031** of the staples **10030** can be supported by staple drivers positioned within the support portion **10010** and, concurrently, the legs **10032** of the staples **10030** can be at

least partially contained within the staple cavities **10012**. In various circumstances, the staples **10030** can be deployed between an unfired position and a fired position such that the legs **10032** move through the tissue thickness compensator **10020**, penetrate through a top surface of the tissue thickness compensator **10020**, penetrate the tissue T, and contact an anvil positioned opposite the staple cartridge **10000**. As the legs **10032** are deformed against the anvil, the legs **10032** of each staple **10030** can capture a portion of the tissue thickness compensator **10020** and a portion of the tissue T within each staple **10030** and apply a compressive force to the tissue. Further to the above, the legs **10032** of each staple **10030** can be deformed downwardly toward the base **10031** of the staple to form a staple entrapment area in which the tissue T and the tissue thickness compensator **10020** can be captured. In various circumstances, the staple entrapment area can be defined between the inner surfaces of the deformed legs **10032** and the inner surface of the base **10031**. The size of the entrapment area for a staple can depend on several factors such as the length of the legs, the diameter of the legs, the width of the base, and/or the extent in which the legs are deformed, for example.

In use, further to the above and referring primarily to FIG. **4**, an anvil, such as anvil **8014** of the surgical stapling and severing instrument **8010**, can be moved into a closed position opposite the staple cartridge **10000** by depressing the closure trigger **8026** to advance the E-beam **9102**. The anvil **8014** can position tissue against the tissue thickness compensator **10020** and, in various circumstances, compress the tissue thickness compensator **10020** against the support portion **10010**, for example. Once the anvil **8014** has been suitably positioned, the staples **10030** can be deployed, as also illustrated in FIG. **4**. In various circumstances, as mentioned above, a staple-firing sled **10050**, which is similar in many respects to the sled **9126** (See FIG. **3**), can be moved from a proximal end of the staple cartridge **10000** toward a distal end **10002**, as illustrated in FIG. **5**. As the firing assembly **9090** is advanced, the sled **10050** can contact the staple drivers **10040** and lift the staple drivers **10040** upwardly within the staple cavities **10012**. In at least one example, the sled **10050** and the staple drivers **10040** can each comprise one or more ramps, or inclined surfaces, which can co-operate to move the staple drivers **10040** upwardly from their unfired positions. As the staple drivers **10040** are lifted upwardly within their respective staple cavities **10012**, the staple drivers **10040** can lift the staples **10030** upwardly such that the staples **10030** can emerge from their staple cavities **10012**. In various circumstances, the sled **10050** can move several staples upwardly at the same time as part of a firing sequence.

As discussed above, and referring to FIG. **5**, the staple legs **10032** of the staples **10030** can extend into the compensator **10020** beyond the support portion **10010** when the staples **10030** are in their unfired positions. In various circumstances, the tips of the staple legs **10032**, or any other portion of the staple legs **10032**, may not protrude through a top tissue-contacting surface **10021** of the tissue thickness compensator **10020** when the staples **10030** are in their unfired positions. In certain circumstances, the tips of the staple legs **10032** can comprise sharp tips which can incise and penetrate the tissue thickness compensator **10020**.

In various circumstances, it may be preferable to prevent and/or limit frictional forces between a tissue thickness compensator and a staple. Referring now to FIGS. **6-8**, a tissue thickness compensator **20220** for use with a staple cartridge assembly **20200** can include a plurality of clearance apertures **20224** extending at least partially through the tissue thickness compensator **20220**. In various circumstances, the staple cartridge assembly **20200** can include a staple cartridge body **20210** and a tissue thickness compensator **20220** releasably secured relative to the staple cartridge body **20210**. The cartridge body **20210** can include a cartridge deck **20211** and a plurality of staple cavities **20212** defined through the cartridge deck **20211** and into the body of the staple cartridge body **20210**, for example. Staples **20230** can be removably positioned in the staple cavities **20212**, for example. The tissue thickness compensator **20220** can include a tissue-contacting surface **20221** (FIG. **7**) and a deck-contacting surface **20222** (FIG. **6**). The deck-contacting surface **20222** can be releasably positioned against the deck **20211** of the cartridge body **20210**, for example, and the tissue-contacting surface **20221** can be positioned against tissue T to be stapled, for example. Clearance apertures **20224** can extend through the deck-contacting surface **20222** and into the tissue thickness compensator **20220** and may comprise holes, slits, gaps, bores, openings, and/or cleared pathways, for example, within the tissue thickness compensator **20220**.

Referring primarily to FIGS. **7** and **8**, staples **20230** can be positioned in the staple cavities **20212** of the cartridge body **20210**. Each staple **20230** can include a base **20231** and a pair of staple legs **20232**, for example, which can extend from the base **20231**. Each staple leg **20232** can extend from opposite ends of the base **20231**. Referring primarily to FIG. **7**, one or more of the clearance apertures **20224** in the tissue thickness compensator **20220** can include an opening in the deck-contacting surface **20222**. The opening of a clearance aperture **20224** can be aligned with a corresponding staple leg **20232** that is positioned in a staple cavity **20212**. For example, a single staple leg **20232** can be aligned with the opening of a single clearance aperture **20224** when the tissue thickness compensator **20220** is secured relative to the cartridge body **20210**. In certain circumstances, a staple leg **20232** can extend into each clearance aperture **20224**, such that at least a portion of the staple **20230** is embedded in the tissue thickness compensator **20220**, for example. For example, referring primarily to FIG. **7**, a staple **20230** can include a first staple leg **20232*a*** and a second staple leg **20232*b***. Furthermore, the tissue thickness compensator **20220** can include a first clearance aperture **20224*a*** aligned with the first staple leg **20232*a***, and a second clearance aperture **20224*b*** aligned with the second staple leg **20232*b***, for example. Prior to deployment of the staple **20230**, the first staple leg **20232*a*** can extend partially through the first clearance aperture **20224*a***, and the second staple leg **20232*b*** can extend partially through the second clearance aperture **20224*b***, for example. The tissue thickness compensator **20220** can include additional clearance apertures **20224** that are not aligned with staple legs **20232**, for example. In certain circumstances, the staple cartridge assembly **20200** can include additional staples **20230** and/or staple legs **20232** that are not aligned with clearance apertures **20224**, for example.

The staples **20230** can be moveable from an unfired configuration (FIG. **7**) to a fired configuration (FIG. **8**). Each staple **20230** can be moved along a staple axis when moving between the unfired configuration and the fired configuration. When in the unfired configuration, the staple legs **20232** can extend from the staple cavities **20212** and into the tissue thickness compensator **20220**, for example. The staple legs **20232** can be partially embedded in the tissue thickness compensator **20220** when the staples **20230** are in the unfired configuration, for example. Furthermore, at least a

portion of the staple legs **20232** can be aligned with and/or positioned within the clearance apertures **20224** of the tissue thickness compensator **20220** when the staples are in the unfired configuration, for example. In other circumstances, the staple legs **20232** can be positioned entirely within the staple cavity **20212** when in the unfired configuration, and can be aligned with the clearance apertures **20224** positioned above the cartridge deck **20211** (FIG. **6**), for example.

The staples **20230** can move from the unfired configuration (FIG. **7**) to the fired configuration (FIG. **8**) during a firing stroke, as described herein. A staple driver **20240** can be positioned within each staple cavity **20212**. The staple driver **20240** within each staple cavity **20212** can be pushed toward the cartridge deck **20211** (FIG. **6**), for example, to drive the staple **20230** into tissue T and toward an anvil **20260** (FIG. **8**) which can be similar in many respects to other anvils described herein such as, for example, the anvil **8014** (FIG. **1**). As each staple **20230** moves from the unfired configuration to the fired configuration, the staple legs **20232** can move through the clearance apertures **20224** in the tissue thickness compensator **20220**. The clearance apertures **20224** can have a predefined trajectory within the tissue thickness compensator **20220**. For example, the clearance apertures **20224** can extend along an axis that is perpendicular to and/or substantially perpendicular to the tissue-contacting surface **20221** (FIG. **7**) and/or the deck-contacting surface **20222** (FIG. **6**) of the tissue thickness compensator **20220**. In other circumstances, the clearance apertures **20224** can extend along an axis that is oriented at an oblique angle relative to the tissue-contacting surface **20221** and/or the deck-contacting surface **20222** of the tissue thickness compensator **20220**, for example. In certain circumstances, a group of the clearance apertures **20224** can be parallel. In some circumstances, all of the clearance apertures **20224** within the tissue thickness compensator **20220** can be parallel, for example. The clearance apertures **20224** can comprise a partially curved trajectory and/or a partially linear trajectory. Other characteristics and features of the clearance apertures **20224** are described in greater detail in U.S. patent application Ser. No. 13/851,693, entitled FASTENER CARTRIDGE ASSEMBLY, and filed on Mar. 27, 2013, the entire disclosure of which is incorporated herein by reference. Methods and techniques for modifying a tissue thickness compensator to include clearance apertures such as, for example, the clearance apertures **20224** are described below in greater detail.

Referring now to FIGS. **9-12**, an end effector **22090** of a surgical instrument similar in many respects to the surgical instrument **8010**, for example, can comprise a first jaw including a fastener cartridge assembly **22000** and a second jaw including an anvil **10060**. The first jaw can include a staple cartridge channel **10070** which can be configured to removably receive the cartridge assembly **22000**. Alternatively, the staple cartridge channel **10070** and the cartridge assembly **22000** can comprise an integral unit. In various circumstances, the anvil **10060** can be moved between an open position and a closed position (FIGS. **9-12**). In the open position of the anvil **10060**, the anvil **10060** can be positioned on a first side of a patient's tissue T (FIGS. **10-12**) and the cartridge assembly **22000** can be positioned on a second, or opposite, side of the tissue T, for example. When the anvil **10060** is moved into its closed position, the anvil **10060** can compress the tissue T against the cartridge assembly **22000**. Alternatively, the first jaw including the cartridge assembly **22000** can be moved relative to the anvil **10060**. A firing member **10052**, which is similar in many respects to the firing assembly **9090** (FIG. **3**), can be advanced distally from a proximal end **22001** of the cartridge assembly **22000** toward a distal end **22002** of the cartridge assembly **22000** to eject fasteners, such as staples **22030**, for example, removably stored in a cartridge body **22010** of the cartridge assembly **22000** as the firing member **10052** is advanced from the proximal end **22001** toward the distal end **22002** of the cartridge assembly **22000**.

Further to the above, the staples **22030** can be supported by staple drivers **10040** which are movably positioned within staple cavities **22012** defined in the cartridge body **22010**. Moreover, the firing member **10052** can be configured to advance a staple-firing sled **10050** distally within the cartridge body **22010** as the firing member **10052** is moved from the proximal end **22001** toward the distal end **22002**. In such circumstances, the staple-firing sled **10050** can be configured to lift the staple drivers **10040**, and the staples **22030** supported thereon, toward the anvil **10060**. In essence, further to the above, the staple drivers **10040** can move the staples **22030** from an unfired position (FIG. **10**) to a fired position (FIGS. **11** and **12**) wherein the staples **22030** can contact the anvil **10060** and be deformed between an undeformed configuration (FIG. **10**) and a deformed configuration (FIGS. **11** and **12**). The anvil **10060** can comprise forming pockets **10062** which can be configured to receive and deform the staples **22030**. Staples **22030** can be the same as or similar to staples **10030**, for example and/or any other staples disclosed herein, and, as such, staples **22030** are not described in greater detail herein. The reader will note, however, that the staples **22030** can comprise any suitable shape and/or suitable dimensions, such as width and/or height, for example, in their undeformed configuration and/or their deformed configuration. For instance, the staples **22030** can, in certain circumstances, comprise a height which does not extend above a deck surface **22011** of the cartridge body **22010** when the staples **22030** are in their unfired positions while, in other circumstances, the staples **22030** can comprise a height in which the legs of the staples **22030** extend upwardly from the deck surface **22011** when the staples **22030** are in their unfired positions such that the legs of the staples **22030** are at least partially embedded in a tissue thickness compensator **22010** of the cartridge assembly **22000**.

With continued reference to the embodiment depicted in FIGS. **9-12**, further to the above, the cartridge assembly **22000** can comprise a cartridge body **22010** and a tissue thickness compensator **22020**. In various circumstances, the cartridge body **22010** can be similar to the support portion **10010**, for example, in many respects and, as a result, many of such respects are not repeated herein for the sake of brevity. Furthermore, the tissue thickness compensator **22020** can be similar to the tissue thickness compensator **10020**, for example, in many respects. Further to the above, the firing member **10052** can include a cutting portion **10053** which can be configured to transect the tissue positioned between the anvil **10060** and the tissue thickness compensator **22020** as the firing member **10052** is advanced distally. In various circumstances, as a result, the firing member **10052** can be configured to concurrently fire the staples **22030** to staple the tissue T and cut the tissue T. In certain circumstances, the firing process can at least partially lead the cutting process. Stated another way, the cutting process can lag the firing process. In such circumstances, a portion of the tissue T can be stapled and then incised.

As illustrated in FIGS. **9-12**, the cartridge body **22010** can include a cartridge knife slot **22015** which can be configured to receive a portion of the firing member **10052** as the firing member **10052** is advanced distally. Further to the above, the

anvil **10060** can include an anvil knife slot **10065** which can be configured to receive a portion of the firing member **10052** as the firing member **10052** is advanced distally. In various circumstances, the tissue thickness compensator **22020** can comprise a tissue thickness compensator knife slot **22025** which can be aligned with the anvil knife slot **10065** and the cartridge knife slot **22015** such that the firing member **10052** can pass through the cartridge knife slot **22015**, the anvil knife slot **10065**, and the tissue thickness compensator knife slot **22025** simultaneously. In various circumstances, the anvil knife slot **10065** can extend over the tissue thickness compensator knife slot **22025** such that the cutting portion **10053** of the firing member **10052** can pass through the cartridge knife slot **22015**, the anvil knife slot **10065**, and the tissue thickness compensator knife slot **22025** simultaneously. The tissue thickness compensator knife slot **22025** can define a tissue thickness compensator knife path for the cutting portion **10053** wherein the tissue thickness compensator knife path can be parallel to the anvil knife path and the cartridge knife path. In various circumstances, the tissue thickness compensator knife path can be longitudinal while, in certain circumstances, the tissue thickness compensator knife path can be curved. Further to the above, curved end effectors and curved fastener cartridges are disclosed in U.S. Patent Application Publication No. 2008/0169329. The entire disclosure of U.S. patent application Ser. No. 11/652,164, entitled CURVED END EFFECTOR FOR A SURGICAL STAPLING DEVICE, filed on Jan. 11, 2007, now U.S. Patent Application Publication No. 2008/0169329, is hereby incorporated by reference herein. In such circumstances, a tissue thickness compensator can be curved. In at least one such embodiment, the tissue thickness compensator can be curved to match the curvature of the cartridge body of the fastener cartridge. Methods and techniques for modifying a tissue thickness compensator to include a knife slot such as, for example, the knife slot **22025** are described below.

Further to the above, referring primarily to FIG. **9**, the tissue thickness compensator knife slot **22025** can extend between a first stapling portion **22021***a* which can be stapled by a first group of staples **22030** and a second stapling portion **22021***b* which can be stapled by a second group of staples **22030**. The knife slot **22025** can releasably connect the first stapling portion **22021***a* to the second stapling portion **22021***b*. In use, as illustrated in FIG. **9**, the cutting portion **10053** can be advanced distally through the knife slot **22025** to transect the knife slot **22025** and separate the first stapling portion **22021***a* and the second stapling portion **22021***b*. In certain circumstances, the knife slot **22025** can comprise a plurality of connectors, or bridges, **22026** which can connect the first stapling portion **22021***a* and the second stapling portion **22021***b* prior to being transected by the cutting portion **10053**. In various circumstances, the connectors **22026** can have the same thickness as the first stapling portion **22021***a* and/or the second stapling portion **22021***b*, at least when the tissue thickness compensator **22020** is in an uncompressed state. In at least one such circumstance, the connectors **22026**, the first stapling portion **22021***a*, and/or the second stapling portion **22021***b* can be unitarily and integrally formed from a flat, or at least substantially flat, piece of material, for example. In various other circumstances, the first stapling portion **22021***a* can comprise a first thickness, the second stapling portion **22021***b* can comprise a second thickness, and the connectors **22026** can comprise a third thickness, wherein one or more of the first thickness, the second thickness, and the third thickness can be different than the other thicknesses.

The knife slot **22025** can further comprise apertures, such as apertures **22024**, for example, defined therein. For instance, the apertures **22024** can be elongate and can extend longitudinally along the knife slot **22025**. In various other circumstances, the apertures in the knife slot **22025** can comprise any suitable arrangement. In certain circumstances, the apertures **22024** can comprise perforations positioned intermediate the connectors **22026** which can be formed utilizing a laser cutting operation, for example. In some circumstances, the apertures **22024** can be cut from a sheet of material to form the tissue thickness compensator **22020** such that the apertures **22024** and the connectors **22026** are arranged in an alternating arrangement, for example. In other instances, the tissue thickness compensator **22020** can be molded with apertures **22024** already formed therein. In various circumstances, one or more of the apertures **22024** can comprise through holes, for example. In various circumstances, one or more of the apertures **22024** can comprise clearance apertures, for example. In certain instances, one or more of the apertures **22024** may not comprise through holes and may instead comprise reductions in the thickness of the knife slot **22025**, for example. Methods and techniques for modifying a tissue thickness compensator to include apertures such as, for example, the apertures **22024** are described below.

Further to the above, referring again to FIGS. **9-11**, patient tissue can be positioned intermediate the anvil **10060** of the end effector **22090** and the tissue thickness compensator **22020** of the cartridge assembly **22000** when the anvil **10060** is in an open position. When the anvil **10060** is moved into a closed position, a bottom surface, or tissue-contacting surface, **10063** of the anvil **10060** can contact the tissue T and push the tissue T toward a deck surface **22011** of the cartridge body **22010**. The tissue T can contact a top surface, or tissue contacting surface, **22021** of the tissue thickness compensator **22020** wherein, when the anvil **10060** is moved into its closed position, the anvil **10060** can press the tissue T against the tissue thickness compensator **22020** and, further to the above, compress the tissue thickness compensator **22020** against the deck surface **22011** of the cartridge body **22010**. In various circumstances, the tissue thickness compensator **22020** can comprise a bottom surface **22029** which can abut the deck surface **22011**. In some circumstances, a gap may be present between the bottom surface **22029** and the deck surface **22011** before the tissue thickness compensator **22020** is compressed against the cartridge body **22010**. In such circumstances, the tissue thickness compensator **22020** may first translate toward the cartridge body **22010** before being compressed thereagainst. When the tissue thickness compensator **22020** is compressed against the cartridge body **22010**, in various circumstances, the first stapling portion **22021***a* and/or the second stapling portion **22021***b* of the tissue thickness compensator **22020** may move laterally. For instance, the first stapling portion **22021***a* and/or the second stapling portion **22021***b* may move laterally away from the cartridge knife slot **22015**. In various circumstances, the connectors **22026** can be configured to inhibit such lateral movement between the first stapling portion **22021***a* and the second stapling portion **22021***b*. In various circumstances, referring primarily to FIG. **11**, the connectors **22026** can be configured to stretch to permit some relative lateral movement between the first stapling portion **22021***a* and the second stapling portion **22021***b* when the anvil **10060** is closed. In the event that the anvil **10060** is reopened, the connectors **22026** can be configured to elastically return, or at least substantially return, to their unstretched configuration and, as a result, pull

the first stapling portion **22021***a* and the second stapling portion **22021***b* laterally back toward their original positions, illustrated in FIG. **10**. Moreover, the anvil **10060** can compress the tissue T when the anvil **10060** is moved into its closed position. In such circumstances, the tissue T may at least partially flow into the apertures **22024**.

Upon reviewing FIGS. **10-12**, the reader will appreciate that the knife slot **22025** of the tissue thickness compensator **22020** comprises less material along the longitudinal length thereof than the first stapling portion **22021***a* and/or the second stapling portion **22021***b*. Stated another way, a longitudinal cross-section through the first stapling portion **22021***a* and/or the second stapling portion **22021***b* would transect a first amount of material while a longitudinal cross-section through the knife slot **22025** would transect a second amount of material which is less than the first amount of material.

Once the anvil **10060** has been suitably positioned, further to the above, the firing member **10052** can be advanced distally to fire the staples, as illustrated in FIG. **11**, and incise the tissue T and the connectors **22026**, as illustrated in FIG. **12**. Furthermore, the tissue thickness compensator incision force, the tissue incision force, the tissue thickness compensator drag force, and/or the tissue drag force can dull the cutting portion **10053** of the firing member **10052**. A dull knife may not be able to transect the tissue T and/or the tissue thickness compensator **22020**, for example, according to a preferred manner. With primary reference to FIG. **12**, the cutting portion **10053** can comprise a first knife edge zone **10053***a*, a second knife edge zone **10053***b*, and/or a third knife edge zone **10053***c*, for example, wherein the first knife edge zone **10053***a* is positioned vertically above the second knife edge zone **10053***b*, and wherein the second knife edge zone **10053***b* is positioned vertically above the third knife edge zone **10053***c*, for example. The cutting portion **10053** can comprise any suitable number and/or location of knife edge zones wherein the knife edge zones depicted in FIG. **12** have been selected for the purposes of discussion. Further to the above, the first knife edge zone **10053***a* can be configured to transect the tissue T while the second knife edge zone **10053***b* can be configured to transect the tissue thickness compensator **22020**. As a result, the first knife edge zone **10053***a* may experience the tissue incision force and/or the tissue drag force discussed above. Such forces may wear or dull the first knife edge zone **10053***a* at a first rate. The second knife edge zone **10053***b* may experience the tissue thickness compensator incision force and/or the tissue thickness compensator drag force discussed above. Such forces may wear or dull the second knife edge zone **10053***b* at a second rate. In various circumstances, the second rate can be different than the first rate.

Turning now to FIGS. **13** and **14**, a fastener cartridge **22400** can comprise a tissue thickness compensator **22420** which can include a first stapling portion **22421***a* and a second stapling portion **22421***b* which are connected by a knife slot **22425**. The knife slot **22425** can comprise an angled longitudinal connector **22426**. The angled longitudinal connector **22426** can extend between a proximal end **22401** of the knife slot **22425** and a distal end **22402** of the knife slot **22425**. In some circumstances, the angled longitudinal connector **22426** can extend the entire length of the knife slot **22425** while, in other circumstances, the angled longitudinal connector **22426** can extend less than the length of the knife slot **22425**. The angled longitudinal connector **22426** can extend between a top surface **22428** of the tissue thickness compensator **22420** and a bottom surface **22429** of the tissue thickness compensator **22420**. In some circumstances, the angled longitudinal connector **22426** can extend the entire distance between the top surface **22428** and the bottom surface **22429** while, in other circumstances, the angled longitudinal connector **22426** can extend less than the distance between the top surface **22428** and the bottom surface **22429**. In various circumstances, the proximal end of the longitudinal connector **22426** can extend from the top surface **22428** of the tissue thickness compensator while the distal end of the longitudinal connector **22426** can extend from the bottom surface **22429**. Alternatively, the distal end of the longitudinal connector **22426** can extend from the top surface **22428** of the tissue thickness compensator while the proximal end of the longitudinal connector **22426** can extend from the bottom surface **22429**. In various circumstances, the longitudinal connector **22426** can comprise a thin bridge (i.e. less than the full thickness of the tissue thickness compensator **22420**) or a series of thin bridges that join the first stapling portion **22421***a* which can be stapled by a first group of staples **22030** to the second stapling portion **22421***b* which can be stapled by a second group of staples **22030**, for example. These thin, angled bridges, and/or the longitudinal connector **22426**, could distribute the wear across the second knife edge zone **10053***b*, rather than concentrating it on one spot. In various circumstances, as a result, the wear occurring on the second knife edge zone **10053***b* may be equal to, or closer to being equal to, the wear occurring at the first knife edge zone **10053***a*, for example.

Referring now to FIGS. **15-17**, an exemplary tissue thickness compensator assembly **1000** may include a first layer **1002** and a second layer **1004** attachable to the first layer **1002**. The tissue thickness compensator assembly **1000** can be utilized with a surgical instrument such as, for example, the surgical instrument **8010** (FIG. **1**). In addition, the tissue thickness compensator assembly **1000** can be utilized in a similar manner as and can replace the tissue thickness compensator **22020** of the cartridge assembly **22000** of the end effector **22090** (FIG. **9**). For example, the second layer **1004** of the tissue thickness compensator assembly **1000** may include a first portion **1006** which can be positioned on the deck surface **22011** on a first side of the cartridge knife slot **22015** in a similar fashion to the first stapling portion **22021***a* and a second portion **1008** which can be positioned on the deck surface **22011** on a second side, opposite the first side, of the cartridge knife slot **22015** in a similar fashion to the second stapling portion **22021***b* (FIGS. **9-11**). In various instances, the first portion **1006** and the second portion **1008** of the second layer **1004** can be spaced apart and may comprise a gap **1010** therebetween which can comprise a knife path for the cutting portion **10053** of the firing member **10052** and may extend at least partially over the cartridge knife slot **22015** when the tissue thickness compensator assembly **1000** is assembled with the cartridge end effector **22090**. In certain instances, the first layer **1002** can be configured to couple the first portion **1006** and the second portion **1008** and extend at least partially over the gap **1010**, as illustrated in FIG. **17**, for example.

In use, tissue T can be captured between the anvil **10060** and a tissue contacting surface **1012** of the first layer **1002**. As the firing member **10052** is advanced, a first group of staples **20030** can be deployed to staple the first portion **1006** and a second group of staples can be deployed to staple the second portion **1008**. The first and second groups of staples can be configured to penetrate through a first deck contacting surface **1007** and a second deck contacting surface **1009**, respectively, of the second layer **1004**, then through the tissue contacting surface **1012** of the first layer, and then through the captured tissue T to contact the pockets **10062**

of the anvil **10060**. Furthermore, the advancement of the firing member **10052** can cause the cutting portion **10053** to be advanced distally through the gap **1010** of the tissue thickness compensator assembly **1000**. The cutting portion **10053** may transect the first layer **1002** while advancing through the gap **1010** thereby separating the first portion **1006** and the second portion **1008** of the second layer **1004**.

Referring again to FIG. **17**, the first layer **1002** of the tissue thickness compensator assembly **1000** may comprise a first height H**1**, the first portion **1006** of the second layer **1004** may comprise a second height H**2**, and the second portion **1008** of the second layer **1004** may comprise a third height H**3**. In certain circumstances, as illustrated in FIG. **17**, the second height H**2** and the third height H**3** can be the same or substantially the same. In other circumstances, the second height H**2** can be different from the third height H**3**. In certain circumstances, the first height H**1** can be less than the second height H**2** and/or the third height H**3**, as illustrated in FIG. **17**. The first layer **1002** of the tissue thickness compensator assembly **1000** may comprise a first density, the first portion **1006** of the second layer **1004** may comprise a second density, and the second portion **1008** of the second layer **1004** may comprise a third density. In certain circumstances, as illustrated in FIG. **17**, the second density and the third density can be the same or substantially the same. In other circumstances, the second density can be different from the third density and/or different from the first density of the first layer **1002**. The material compositions of the first portion **1006** and the second portion **1008** can be the same, or at least substantially the same. In other circumstances, the material compositions of the first portion **1006** and the second portion **1008** can be different from each other and/or can be different from the material composition of the first layer **1002**.

As described above, repeated use of the cutting portion **10053** to cut tissue T and tissue thickness compensator material may dull the cutting portion **10053**. To slow the dulling process, it may be desirable to reduce the tissue thickness compensator material that is cut by the cutting portion **10053**. An additional benefit can be a reduction in the forces needed to advance the firing member **10052** distally during a firing stroke. In order to reduce the dulling of the cutting portion **10053**, the first layer **1002** can be comprised, at least partially, of a thin film, for example. In such circumstances, the first height H**1** can be significantly less than the second height H**2** and the third height H**3**, as illustrated in FIG. **17**. In certain circumstances, the first layer **1002** may comprise a uniform, or substantially uniform, height therethrough, as illustrated in FIG. **17**. In other circumstances, a gap bridging portion **1014** of the first layer **1002** may extend at least partially over the gap **1010** and may be thinner than the remainder of the first layer **1002**. The cutting portion **10053** may transect the gap bridging portion **1014** of the first layer **1002** while advancing through the gap **1010** between the first portion **1006** and the second portion **1008** of the second layer **1004** which may reduce the resistance experienced by the cutting portion **10053** and/or slow the dulling of the cutting portion **10053**. In any event, the first layer **1002** can be configured to maintain a coupling engagement with the first portion **1006** and the second portion **1008** of the second layer **1004** prior to being transected, and to present the cutting portion **10053** with a reduced resistance as the cutting portion **10053** is advanced to transect the first layer **1002**.

To further reduce the dulling of the cutting portion **10053** and/or reduce be resistance experienced by the cutting portion **10053**, the gap bridging portion **1014** may comprise a perforated segment **1016** along the knife path defined by the gap **1010**, as illustrated in FIG. **16**. The perforated segment **1016** can include a plurality of perforations **1018** which can be cut into the first layer **1002** prior to the assembly of the first layer **1002** to the second layer **1004**, for example. The perforations **1018** can reduce the interaction between the cutting portion **10053** and the first layer **1002** as the cutting portion **10053** is advanced through the knife path defined by the gap **1010**, which may slow the dulling of the cutting portion **10053** and/or reduce the resistance experienced by the cutting portion **10053**.

In various circumstances, as described in greater detail below, the tissue thickness compensator assembly **1000** can be comprised of one or more biocompatible materials. In certain circumstance, the first layer **1002** can be comprised of a biocompatible buttress material and/or plastic material, such as polydioxanone (PDS) and/or polyglycolic acid (PGA), for example, and the second layer **1004** can be comprised of a bioabsorbable foam material and/or a compressible haemostatic material, such as oxidized regenerated cellulose (ORC), for example. In certain circumstances, the first layer **1002** can be a thin film comprising a bioabsorbable material such as polyglycolic acid (PGA) which is marketed under the trade name Vicryl, polylactic acid (PLA or PLLA), polydioxanone (PDS), polyhydroxyalkanoate (PHA), poliglecaprone 25 (PGCL) which is marketed under the trade name Monocryl, polycaprolactone (PCL), and/or a composite of PGA, PLA, PDS, PHA, PGCL and/or PCL, for example. In certain circumstances, the first portion **1006** and/or the second portion **1008** of the second layer **1004** can be comprised of a lyophilized foam comprising polylactic acid (PLA) and/or polyglycolic acid (PGA), for example. In certain circumstances, the first portion **1006** and/or the second portion **1008** of the second layer **1004** can be comprised of biocompatible foam which may comprise a porous, open cell foam and/or a porous, closed cell foam.

Referring again to FIGS. **15** and **17**, the first layer **1002** can be at least partially disposed over the second layer **1004** such that the second layer **1004** may be positioned between the first layer **1002** and the deck surface **22011** (FIG. **9**) when the tissue thickness compensator assembly **1000** is assembled with the end effector **22090** (FIG. **9**). In other circumstances, the first layer **1002** can be positioned beneath the first portion **1006** and the second portion **1008** (not shown) such that the first layer **1002** may be positioned between the second layer **1004** and the deck surface **22011** (FIG. **9**) when the tissue thickness compensator assembly **1000** is assembled with the end effector **22090** (FIG. **9**). In any event, the first layer **1002** can be attached to a first contacting surface **1020** of the first portion **1006** and a second contacting surface **1022** of the second portion **1008** of the second layer **1004**. The first layer **1002** can be attached to the second layer **1004** via a thermal pressing process involving the application of heat and/or pressure, as described in greater detail below. In other circumstances, the first layer **1002** can be attached to the second layer **1004** by a biocompatible adhesive material such as a fibrin and/or protein hydrogel, for example. Other means for attaching the first layer **1002** to the second layer **1004** are contemplated by the present disclosure.

Referring now to FIGS. **21** and **22**, the first layer **1002** can be at least partially embedded into the first portion **1006** and/or the second portion **1008** of the second layer **1004**. In such circumstances, the tissue thickness compensator assembly **1000** can be prepared using a mold **1024**, for example, as illustrated in FIG. **21**. In various instances, an organic solution comprising a polymer such as, for example,

polylactic acid (PLA) and/or polyglycolic acid (PGA) can be poured into the mold **1024**. The first layer **1002** can be immersed into the organic solution. As illustrated in FIG. **22**, a central shelf **1026** and a central beam **1027** of a mold cover **1028** can trap the first layer **1002** therebetween to ensure that the first layer **1002** remains immersed in the organic solution which can then be lyophilized using conventional lyophilization techniques and/or any other suitable techniques, for example. Upon completion of the lyophilization process, and/or any other suitable process, the mold cover **1028** can be removed and the tissue thickness compensator assembly **1000** can be recovered from the mold **1028**.

As illustrated in FIG. **21**, the first layer **1002** of the tissue thickness compensator **1000** can be partially positioned within the first portion **1006** and the second portion **1008** of the second layer **1004**. In certain circumstances, the first layer **1002** can be partially positioned within one of the first portion **1006** and the second portion **1008** and attached to a top surface or a bottom surface of the other one of the first portion **1006** and the second portion **1008**.

In certain circumstances, the central beam **1027** and the shelf **1026** can at least partially extend along an axis that is parallel or substantially parallel to the first deck contacting surface **1007** and/or the second deck contacting surface **1009** when the cover **1028** is in a closed configuration with mold **1024**, as illustrated in FIG. **22**. In such circumstances, the first layer **1002** can be embedded into the first portion **1006** and/or the second portion **1008** such that first layer **1002** is positioned or substantially positioned in a parallel or substantially parallel relationship with the first deck contacting surface **1007** and/or the second deck contacting surface **1009**. In other circumstances, although not illustrated, the central beam **1027** and the shelf **1026** can at least partially extend along an axis that is at an oblique angle with the first deck contacting surface **1007** and/or the second deck contacting surface **1008** when the cover **1028** is in a closed configuration with mold **1024**. In such circumstances, the first layer **1002** can be embedded into the first portion **1006** and/or the second portion **1008** such that first layer **1002** is positioned or substantially positioned at an oblique angle with respect to the first deck contacting surface **1007** and/or the second deck contacting surface **1009**. Other techniques for partially embedding the first layer **1002** into the first portion **1006** and/or the second portion **1008** are contemplated by the present disclosure.

Referring now to FIGS. **18** and **19**, a tissue thickness compensator assembly **1033**, which is similar in many respects to the tissue thickness compensator assembly **1000** and the tissue thickness compensator **20020**, is illustrated. The tissue thickness compensator assembly **1033** can comprise the first portion **1006** and the second portion **1008** which can be spaced apart and separably coupled together by a plurality of bridging members or connectors **1030** which may extend across the gap **1010** between the first portion **1006** and the second portion **1008**. In addition, some or all of the connectors **1030** of the tissue thickness compensator assembly **1033** can be partially embedded into the first portion **1006** and the second portion **1008**, as illustrated in FIG. **19**. Furthermore, some or all of the connectors **1030** can comprise a first end positioned within the first portion **1006**, a second end positioned within the second portion **1008**, and a gap bridging portion **1032** therebetween. The gap bridging portion **1032** may extend across the gap **1010** between the first portion **1006** and the second portion **1008**, as illustrated in FIG. **19**. The connectors **1030** can be spaced apart along the length of the gap **1010** to separably couple the first portion **1006** to the second portion **1008**.

In certain circumstances, the connectors **1030** can be evenly distributed along an axis extending along the gap **1010**, as illustrated in FIG. **19**. In other circumstances, although not illustrated, the connectors **1030** can be unevenly distributed along the axis extending along the gap **1010**. The cutting portion **10053** can be configured to transect the gap bridging portions **1032** of the connectors **1030** as the cutting portion **10053** is advanced between the first portion **1006** and the second portion **1008** through the knife path defined by the gap **1010**. Where the connectors **1030** are unevenly distributed along the axis extending along the first portion **1006** and the second portion, in at least one instance, the connectors **1030** can be disposed in greater frequency and/or in closer proximity to each other at a distal segment of the gap **1010** than at a proximal segment of the gap **1010** such that the cutting portion **10053** may experience an increasing resistance as it is advanced along the knife path defined by the gap **1010**. In other circumstances, the connectors **1030** can be disposed in greater frequency and/or in closer proximity to each other at a proximal segment of the gap **1010** than at a distal segment of the gap **1010** such that the cutting portion **10053** may experience a decreasing resistance as it is advanced along the knife path defined by the gap **1010**, for example.

In certain circumstances, the connectors **1030** can extend or substantially extend in a single plane which can be parallel or substantially parallel to the first deck contacting portion **1007** and/or the second deck contacting portion **1009**, as illustrated in FIG. **19**. In other circumstances, although not illustrated, the connectors **1030** can extend or substantially extend along a plurality of planes which can be parallel or substantially parallel to each other and/or to the first deck contacting portion **1007** and/or the second deck contacting portion **1009**.

Further to the above, some or all of the gap bridging portions **1032** of the connectors **1030** can be thinner than the remainder of their respective connectors **1030** to present the cutting portion **10053** with a reduced resistance as the cutting portion **10053** is advanced to transect the connectors **1030** while maintaining a coupling engagement with the first portion **1006** and the second portion **1008** of the second layer **1004**. For example, some or all the connectors **1030** can comprise a dog-bone shape with thicker ends terminating within the first portion **1006** and the second portion **1008** of the second layer **1004** and thinner central portions extending therebetween. In certain circumstances, the connectors **1030** can each be comprised of a piece of suture which may be comprised of bioabsorbable material such as polyglycolic acid (PGA) which is marketed under the trade name Vicryl, polylactic acid (PLA or PLLA), polydioxanone (PDS), polyhydroxyalkanoate (PHA), poliglecaprone 25 (PGCL) which is marketed under the trade name Monocryl, polycaprolactone (PCL), and/or a composite of PGA, PLA, PDS, PHA, PGCL and/or PCL, for example.

Referring again to FIG. **18**, the tissue thickness compensator assembly **1033** can be prepared using a mold **1034**. An organic solution comprising a polymer such as, for example, polylactic acid (PLA) and/or polyglycolic acid (PGA) can be poured into the mold **1034**. The connectors **1030** can be immersed into the organic solution. As illustrated in FIG. **18**, one or more of the connectors **1030** can each be trapped in one or more dedicated slots **1040** on a central shelf **1036** by one or more beams **1039** extending from a mold cover **1038** and configured for mating engagement with the slots **1040** when the mold cover **1038** is in a closed configuration with the mold **1034** to ensure that the connectors **1030** remain immersed in the organic solution. The slots **1040** can be

sized to receive or at least partially receive the bridging portions **1032** which can be secured by the beams **1039** when the mold cover **1038** is in the closed configuration with the mold **1034**. The ends of the connectors **1030** extending from the gap bridging portions **1032** may freely float in the organic solution. Alternatively, the ends of the connectors **1030** can be secured to sides of the mold **1034**, for example. In certain circumstances, the connectors **1030** can be stretched in the organic solution between the sides of the mold **1034**. In other circumstances, the connectors **1030** can be loosely held between the sides of the mold **1034** to extend through the organic solution in a non-linear fashion, for example.

Further to the above, in various instances, the organic solution can then be lyophilized using conventional lyophilization techniques and/or any other suitable techniques. Upon completion of the lyophilization process, the mold cover **1036** can be removed and the tissue thickness compensator assembly **1033** can be recovered from the mold **1034**. As illustrated in FIG. **19**, the resulting tissue thickness compensator assembly **1033** includes connectors **1030** partially positioned within the first portion **1006** and the second portion **1008**. Other techniques for partially embedding the connectors **1030** into the first portion **1006** and/or the second portion **1008** are contemplated by the present disclosure. The reader will appreciate that the connectors **1030** can be positioned closer to or further away from the deck contacting surfaces **1007** and **1009** by changing the height of the central shelf **1038** and/or depth of the slots **1040**.

Referring now to FIG. **20**, a tissue thickness compensator assembly **1042**, which may be similar in many respects to the tissue thickness compensator assembly **1033**, the tissue thickness compensator assembly **1000**, and/or the tissue thickness compensator **20020**, is illustrated. The tissue thickness compensator assembly **1042** may comprise the first portion **1006** and the second portion **1008** which can be spaced apart and separably coupled together by a continuous flexible member **1044** which may form a plurality of bridging members or connectors **1046** which may extend across the gap **1010** between the first portion **1006** and the second portion **1008**. The continuous flexible member **1044** may include a first end **1048**, a second end **1050**, and a flexible portion **1052** extending between the first end **1048** and the second end **1050**. The flexible portion **1052** can be configured to extend through the first portion **1006** and the second portion **1008** several times, for example in a zigzag pattern, to form the connectors **1046**, as illustrated in FIG. **20**. The flexible portion **1052** can be passed in a first direction through a distal segment **1054** of the first portion **1006** and a distal segment **1056** of the second portion **1008** to form a first gap bridging portion **1046***a* across the gap **1010**. The flexible portion **1052** can then be looped and passed in a second direction, opposite the first direction, through the second portion **1008** proximal to the distal segment **1056** and through the first portion **1006** proximal to the distal segment **1054** thereby forming a second gap bridging portion **1046***b* proximal the first gap bridging portion **1046***a*. Additional gap bridging portions **1046***c* and **1046***d*, for example, can be formed in the same manner across the gap **1010**, as illustrated in FIG. **20**.

In certain circumstances, the continuous flexible member **1044** can comprise a suture and can be comprised of a suture material such as polyglycolic acid (PGA) which is marketed under the trade name Vicryl, polylactic acid (PLA or PLLA), polydioxanone (PDS), polyhydroxyalkanoate (PHA), poliglecaprone 25 (PGCL) which is marketed under the trade name Monocryl, polycaprolactone (PCL), and/or a composite of PGA, PLA, PDS, PHA, PGCL and/or PCL, for example. In certain circumstances, the tissue thickness compensator assembly **1042** can be assembled after the first portion **1006** and the second portion **1008** are manufactured, for example, via lyophilization. In some circumstances, a needle (not shown) can be attached to the first end **1048** of the continuous flexible member **1044** and can be passed through the first portion **1006** and the second portion **1008**, for example in a zigzag pattern, to couple the first portion **1006** to the second portion **1008**, as described above. The first end **1048** and/or the second end **1050** of the continuous flexible member **1044** can be secured to the side walls of the first portion **1006** and/or the second portion **1008** by tying in one or more knots at the first end **1048** and/or the second end **1050**, for example. The knots may abut against the side walls of the first portion **1006** and/or the second portion **1008** to prevent the flexible portion **1052** from unraveling relative to the first portion **1006** and/or the second portion **1008**. In other circumstances, the first portion **1006** and the second portion **1008** of the tissue thickness compensator assembly **1042** can be formed around the continuous flexible member **1044**. In such circumstances, as illustrated in FIG. **20**, the continuous flexible member **1044** can be disposed in a mold **1062**, for example in a zigzag pattern, with slots **1064** defined side walls **1066** and slots **1068** defined in central shelf **1070**. An organic solution comprising a polymer such as, for example, polylactic acid (PLA) and/or polyglycolic acid (PGA) can be poured into the mold **1062** until the continuous flexible member **1044** is immersed in the organic solution. A mold cover **1072** can be used to ensure that the continuous flexible member **1044** remains immersed in the organic solution which can then be lyophilized using conventional lyophilization techniques and/or any other suitable techniques. The first end **1048** and the second end **1050** of the continuous flexible member **1044** can be secured at openings **1053** and **1055** of the mold **1062**, respectively, by tying in one or more knots at the first end **1048** and the second end **1050** after passing the first end **1048** through the opening **1053** and the second end **1050** through the opening **1055**, for example. The knots may abut against the side walls of the mold **1062** to prevent the continuous flexible member **1044** from unraveling relative to the mold **1066**. After the tissue thickness compensator has been removed from the mold, in various instances, portions of the continuous flexible member **1044**, such as portions **1048**, **1050**, and/or **1052**, for example, can then be cut and removed from the tissue thickness compensator. Other techniques for assembling the tissue thickness compensator assembly **1042** are contemplated by the present disclosure.

In certain circumstances, a tissue thickness compensator assembly such as, for example, the tissue thickness compensator assembly **1042** can be compromised when excessive force or pressure is applied thereto. For instance, pressure can be applied to a tissue thickness compensator assembly such as, for example, the tissue thickness compensator assembly **1042** when the tissue thickness compensator assembly **1042** is loaded onto a staple cartridge such as, for example, the staple cartridge **10000**. The tissue thickness compensator assembly **1042** can be equipped with a pressure or force sensitive member that can provide a user with a warning feedback if the pressure experienced by the tissue thickness compensator assembly exceeds a threshold. For example, a pressure or force sensitive film can be attached to the tissue thickness compensator assembly **1042** and can be configured to change color upon experiencing pressure that exceeds the threshold. In certain circumstances, the pressure or force sensitive film can be disposed

over the first portion **1006** and/or the second portion **1008** and can be attached thereto via an adhesive, for example. The pressure or force sensitive film can be biocompatible to permit implantation of the pressure or force sensitive film with the tissue thickness compensator assembly **1042** inside a patient.

Referring now to FIGS. **23-25**, a surgical end effector **1100** is illustrated. The end effector **1100** is similar in many respects to various end effectors disclosed elsewhere herein such as, for example, the end effector **22090** (FIG. **9**). As illustrated in FIG. **23**, the end effector **1100** can include a staple cartridge assembly **1102** which is similar in many respects to the staple cartridge assembly **20200** (FIG. **6**), for example. In addition, the end effector **1100** may include a tissue thickness compensator **1104** which is similar in many respects to other tissue thickness compensators disclose elsewhere in this document such as the tissue thickness compensator **22020** (FIG. **9**), the tissue thickness compensator **20220** (FIG. **6**), and/or the tissue thickness compensator **10020** (FIG. **4**), for example.

Further to the above, end effector **1100** can include a tissue thickness compensator **1104** wherein the tissue thickness compensator **1104** can be prepared using conventional lyophilization techniques and/or any other suitable techniques. In at least one example, the tissue thickness compensator **1104** can be prepared by dissolving a polymer such as, for example, polylactic acid (PLA) and/or polyglycolic acid (PGA) in an organic solvent and lyophilizing the solution. The tissue thickness compensator **1104** can be comprised of a biocompatible foam which may comprise a porous, open cell foam and/or a porous, closed cell foam, for example.

Further to the above, the tissue thickness compensator **1104** can be altered or modified for use in a surgical procedure. For example, upon completion of the lyophilization process, the tissue thickness compensator **1104** can be contacted with a modifying member **1106** to modify the tissue thickness compensator **1104** for use in a particular surgical procedure. In certain circumstances, the modification can occur after assembling the tissue thickness compensator **1104** with the end effector **1100**, as illustrated in FIGS. **23-35**. For example, as illustrated in FIG. **23**, the tissue thickness compensator **1104** can be releasably assembled to the cartridge assembly **1102** and modified while assembled with the cartridge assembly **1102**. In other circumstances, the modification can occur before assembling the tissue thickness compensator **1104** with the end effector **1100**. In at least one example, the modification can be performed as a separate step during manufacturing. In yet another example, the modification may be performed during a surgical procedure.

As described in greater detail below, the modification process can involve modifying a surface or a plurality of surfaces of the tissue thickness compensator **1104**. In certain circumstances, the modification process can involve modifying one or more portions of the tissue thickness compensator **1104**. One or more portions can be modified in a single modification process. Alternatively, a plurality of portions can each be modified separately in consecutive modification processes. In certain circumstances, the modification process can comprise a thermal pressing process which can be used to change the shape, size, dimensions, and/or porosity of at least a portion of the tissue thickness compensator **1104**. Furthermore, the modification process can include means for creating space within one or more portions of the tissue thickness compensator **1104**.

Referring again to FIGS. **23-25**, in certain circumstances, a portion **1107** (FIG. **23**) of the tissue thickness compensator **1104** can be modified by a thermal pressing process which may include transitioning the portion **1107** to a glassy state, engaging the portion **1107** with the modifying member **1106**, applying pressure onto the portion **1107** while it is in the glassy state, and allowing the portion **1107** to cool below the glassy state while the modifying member **1106** is still engaged with the portion **1107**. The modifying member **1106** may be used to maintain the pressure on the portion **1107** for a time period sufficient to create the resulting modified portion **1108** (FIG. **25**). It is note worthy that a material's transition into a glassy state can be a reversible transition from a relatively hard state to a relatively molten or flexible state in response to an increase in the temperature of the material to a glass transition temperature. A glass transition temperature of the material can be a particular temperature or, in some instances, a range of temperatures. The tissue thickness compensator modification process described herein takes advantage of this phenomenon by modifying a tissue thickness compensator while the tissue thickness compensator is in the glassy flexible state and then allowing the tissue thickness compensator to cool below the glass transition temperature while maintaining the modification.

Further to the above, referring again to FIGS. **23-25**, the portion **1107** of the tissue thickness compensator **1004** can be transitioned into the glassy state by heating at least the portion **1107** to a temperature greater than or equal to a glass transition temperature of the material from which the portion **1107** is composed but lower than the melting temperature of the same. For example, the tissue thickness compensator **1104** can be comprised of polyglycolic acid (PGA) and in such circumstances, the portion **1107** can be transitioned into the glassy state by heating the portion **1107** to a temperature that is greater than or equal to the glass transition temperature of polyglycolic acid (PGA) but lower than the melting temperature of the same. In various instances, the glass transition temperature of polyglycolic acid (PGA) can be in the range of 35-40° C., for example, and its melting temperature can be in the range of 225-230° C., for example. In at least one example, the portion **1107** of the tissue thickness compensator **1104** can be heated to a temperature that is greater than or equal to 35° C. but lower than 225° C. in order to transition the portion **1107** to the glassy state. In another example, the portion **1107** can be transitioned to the glassy state by heating the portion **1107** to a temperature that is greater than or equal to 40° C. but lower than 200° C., for example.

Further to the above, the modifying member **1106** can then be used to apply pressure onto the portion **1107** while the portion **1107** is in the glassy state. The portion **1107** can be allowed to exit the glassy state by cooling the portion **1107** to a temperature below 35° C., for example. The pressure may be maintained for a time period sufficient to permit the tissue thickness compensator **1104** to retain, or at least partially retain, the modification imposed by the modifying member **1106**.

In certain examples, the pressure can be maintained for a period of time from about 30 seconds to about 8 hours, for example, during the time in the glassy state and/or for a period of time from about 30 seconds to about 8 hours, for example, after exiting the glassy state. In at least one example, the pressure can be maintained for approximately 10 minutes during the time in the glassy state and for approximately 10 minutes after exiting the glassy state. Other time periods for maintaining the pressure are contemplated by the present disclosure.

In certain circumstances, the modifying member **1106** can be used to apply pressure onto the portion **1107** before the portion **1107** is transitioned to the glassy state. In certain circumstances, the modifying member **1106** may apply pressure to the portion **1107** while the portion **1107** is heated to reach the glassy state, while the portion **1107** is in the glassy state, and/or while the portion **1107** is transitioned or cooled to a temperature below the glassy state. In certain circumstances, the pressure applied to the portion **1107** can be gradually increased toward a threshold as the temperature of the portion **1107** is gradually increased to transition the portion **1107** toward the glassy state, for example. In certain circumstances, the pressure applied to the portion **1107** can be removed, gradually removed, or at least partially reduced as the portion **1107** exits the glassy state, before the portion **1107** exits the glassy state, and/or after the portion **1107** exits the glassy state.

In certain circumstances, the modifying member **1106** can also be a heat source for transitioning the portion **1107** of the tissue thickness compensator **1104** to the glassy state. For example, the modifying member **1106** can comprise a cylindrical distal portion **1110**, as illustrated in FIG. **24**, which may include a heating coil (not shown). A user can may energize the heating coil and engage the portion **1107** of the tissue thickness compensator **1104** with the modifying member **1106** to heat the portion **1107** to a temperature that is greater than or equal the glass transition temperature of the material composition of the portion **1107**. Upon reaching a desired temperature, the modifying member may be pressed against the portion **1107**, as illustrated in FIG. **24**. Alternatively, the modifying member may be pressed against the portion **1107** before the modifying member **1106** reaches the desired temperature. As described above, the pressure may be maintained for a time period sufficient to permit the tissue thickness compensator **1104** to retain, or at least partially retain, the modification imposed by the modifying member **1106**. In addition, the heating coil of the modifying member **1106** can be turned off to allow the temperature of the portion **1107** to cool below the glass transition temperature. The modifying member can then be removed. In certain circumstances, the pressure applied by the modifying member **1106** can be initiated prior to the portion **1107** entering the glassy state and maintained throughout the glassy state. In some circumstances, the pressure applied by the modifying member **1106** can be removed while the portion **1107** is in the glassy state.

As illustrated in FIGS. **23-25**, the modifying member **1106** can be configured to change the shape, size, dimensions, density, spring rate, and/or porosity of the portion **1107** of the tissue thickness compensator **1104**. For example, the modified portion **1108** may comprise a substantially concave top surface **1114** with a reduced height H**1**, while the remainder of the tissue thickness compensator **1104** may retain a substantially flat top surface including an original height H which is greater than the reduced height H**1**, as illustrated in FIG. **25**. As described above, the modifying member **1106** may comprise a cylindrical distal portion **1110**. In such circumstances, the curvature of the resulting concave surface **1114** can, in part, depend on the curvature of the cylindrical distal portion **1110** of the modifying member **1106** in contact with the portion **1107** of the tissue thickness compensator **1104** during the modification process. Furthermore, the modified portion **1108** may possess a new lower porosity compared to the unmodified portion **1107** which can result, at least in part, from the compressive forces applied to the portion **1107** by the modifying member **1106** during the modification process, as described above. Said another way, the pressure applied to the portion **1107** during the modification process may yield a material redistribution wherein a cross-section through the modified portion **1108** may comprise a greater material density than a similar cross section through the portion **1107** prior to the modification process. Furthermore, the modified portion **1108** may comprise a different spring rate from the remainder of the tissue thickness compensator **1104** which can result, in part, from the changes in density and porosity realized by the modified portion **1108** during the modification process, as described in greater detail below. In at least one instance, the spring rate of the modified portion **1108** may be less than or greater than the spring rate of the unmodified portion **1107**.

Referring now to FIGS. **26-34**, a tissue thickness compensator can be modified prior to assembly with an end effector such as, for example, the end effector **22090** (FIG. **9**). In certain circumstances, as illustrated in FIGS. **27**, **30**, and **33**, a mold can be utilized to modify a tissue thickness compensator using a thermal pressing process, as described above. For example, as illustrated in FIGS. **26-28**, a tissue thickness compensator **1120** can be modified to include a longitudinal slot **1122**. The tissue thickness compensator **1120** may be similar in many respects to other tissue thickness compensators described elsewhere such as, for example, the tissue thickness compensator **22020** (FIG. **9**). For example, like the compensator **22020**, the compensator **1120** can be utilized with the end effector **22090**. Furthermore, the longitudinal slot **1122** may be similar in many respects to the knife slot **22025**. For example, like the knife slot **22025**, the slot **1122** may define a tissue thickness compensator knife path for the cutting portion **10053** between a first stapling portion **1124***a* and a second stapling portion **1124***b*. Furthermore, the first stapling portion **1124***a* and the second stapling portion **1124***b* can be similar in many respects to the first stapling portion **22021***a* (FIG. **9**) and the second stapling portion **22021***b* (FIG. **9**), respectively, of the tissue thickness compensator **22020**. In addition, the slot **1122** can be configured to releasably connect the first stapling portion **1124***a* and the second stapling portion **1124***b* such that, in use with the end effector **22090**, the cutting portion **10053** can be advanced distally through the slot **1122** to transect the slot **1122** and separate the first stapling portion **1124***a* and the second stapling portion **1124***b*.

Referring again to FIGS. **26-28**, the tissue thickness compensator **1120** can be prepared using traditional lyophilization techniques and/or any other suitable techniques. In addition, the tissue thickness compensator **1120** can be modified or altered to create the slot **1122** therethrough Similar to the tissue thickness compensator **1104**, the tissue thickness compensator **1120** can be comprised at least in part of a material comprising a glass transition temperature and can modified by transitioning the material into a glassy state. In one example, the tissue thickness compensator **1120** can be heated in an oven (not shown) to a temperature greater than or equal to the glass transition temperature of the material composition of the tissue thickness compensator **1120** but less than the melting temperature of the same. A mold **1126** comprising a central beam **1128**, as illustrated in FIG. **27**, can be utilized to create the slot **1122** by inserting the central beam **1128** into the tissue thickness compensator **1120** while the tissue thickness compensator **1120** is in the glassy state. The tissue thickness compensator **1120** can then be allowed to cool to a temperature below the glass transition temperature while the central beam **1128** remains inserted into the tissue thickness

compensator **1120**. In some instances, the central beam **1128** can be removed from the tissue thickness compensator **1120** while the tissue thickness compensator **1120** is in its glassy state.

In certain circumstances, a cooling medium can be utilized to actively cool the tissue thickness compensator **1120**. In some instances, a fan can be used to generate a flow of air over the tissue thickness compensator **1120** while the tissue thickness compensator **1120** is in the mold **1126** and/or after the tissue thickness compensator **1120** has been removed from the mold. In some instances, a refrigeration process can be utilized to cool the tissue thickness compensator **1120** while the tissue thickness compensator **1120** is in the mold **1126** and/or after the tissue thickness compensator **1120** has been removed from the mold. The central beam **1128** can be removed after transitioning the tissue thickness compensator **1120** out of the glassy state. The central beam **1128** can remain inserted into the tissue thickness compensator **1120** for a time period sufficient to permit the tissue thickness compensator **1120** to retain, or at least substantially retain, the space occupied by the central beam **1128**. In certain examples, the central beam **1128** can remain inserted for a period of time from about 30 seconds to about 8 hours, for example, during the time in the glassy state and/or for a period of time from about 30 seconds to about 8 hours, for example, after exiting the glassy state. In at least one example, the central beam **1128** can remain inserted for approximately 10 minutes during the time in the glassy state and for approximately 10 minutes after exiting the glassy state. Other time periods for maintaining the central beam **1128** within the tissue thickness compensator **1120** are contemplated by the present disclosure.

Further to the above, as illustrated in FIG. **28**, pressure applied by the central beam **1128** during the modification process may yield an increased material density at a portion **1130** of the tissue thickness compensator **1120**. The portion **1130** may connect the first stapling portion **1124***a* and a second stapling portion **1124***b* thereby providing additional stability for the slot **1122**. In certain circumstances, the mold **1126** may comprise edge modifiers such as, for example, edge modifiers **1132***a* and **1132***b* which can modify the tissue thickness compensator **1120** during the modification process to produce modified edges **1134***a* and **1134***b*, respectively, as illustrated in FIG. **28**.

Referring again to FIGS. **26-28**, it may be desirable to remove a significant amount of material from the tissue thickness compensator **1120** to create the slot **1122**. In such circumstances, the central beam **1128** can be heated to a temperature greater than the melting temperature of the material composition of the tissue thickness compensator **1120**. Upon inserting the heated central beam **1128** into the tissue thickness compensator **1120**, the central beam **1128** may melt through the tissue thickness compensator **1120** thereby creating a space for the slot **1122** within the tissue thickness compensator **1120**, as illustrated in FIG. **28**. In certain circumstances, it may be desirable to gradually increase the pressure applied by the central beam **1128** against the tissue thickness compensator **1120** to gradually insert the central beam **1128** into the tissue thickness compensator **1120**.

In certain circumstances, it can be desirable to increase material density of one or more surfaces of a tissue thickness compensator. As illustrated in FIGS. **29-31**, a tissue thickness compensator **1140** can be modified or altered such that a surface **1142** of the tissue thickness compensator **1140** may comprise a higher material density than the remainder of the tissue thickness compensator **1140**, which can be achieved, in certain circumstances, post lyophilization. The tissue thickness compensator **1140** may be similar in many respects to other tissue thickness compensators described elsewhere such as, for example, the tissue thickness compensator **22020** (FIG. **9**) and/or the tissue thickness compensator **1120** (FIG. **26**). A surface modifier **1144** can be utilized to modify the surface **1142** of the tissue thickness compensator **1140** using a thermal pressing process which is similar in many respects to the thermal pressing processes used to modify the tissue thickness compensator **1104** and/or the tissue thickness compensator **1120**, as described above. For example, the tissue thickness compensator **1140** can be comprised at least in part of a material comprising a glass transition temperature and can be modified after being transitioned into a glassy state.

As described above, a tissue thickness compensator such as, for example, the tissue thickness compensator **1140** can be transitioned to the glassy state where it is heated to a temperature greater than or equal to the glass transition temperature of the material composition of the tissue thickness compensator **1140** but less than the melting temperature of the same. The surface modifier **1144** can be pressed against the surface **1142** while the tissue thickness compensator **1140** is in the glassy state. The pressure applied by the surface modifier **1144** may compress the surface **1142** thereby increasing the material density of the surface **1142**. The increase in material density can be retained by the surface **1142** by allowing the surface **1142** to cool to a temperature below the glass transition temperature.

In certain instances, the pressure applied by the surface modifier **1144** against the surface **1142** can be maintained for a period of time from about 30 seconds to about 8 hours, for example, during the time in the glassy state and/or for a period of time from about 30 seconds to about 8 hours, for example, after exiting the glassy state. In at least one example, the pressure can be maintained for approximately 10 minutes during the time in the glassy state and for approximately 10 minutes after exiting the glassy state. Other time periods for maintaining the pressure applied by the surface modifier **1144** against the surface **1142** are contemplated by the present disclosure.

In some instances, a fan can be used to generate a flow of air over the tissue thickness compensator **1140** while the tissue thickness compensator **1140** is in contact with the modifier **1144** and/or after the tissue thickness compensator **1140** has been removed from the modifier **1144**. In some instances, a refrigeration process can be utilized to cool the tissue thickness compensator **1140** while the tissue thickness compensator **1140** is in contact with the modifier **1144** and/or after the tissue thickness compensator **1140** has been removed from the modifier **1144**. Upon transitioning the tissue thickness compensator **1140** out of the glassy state, in various instances, the surface modifier **1144** can be disengaged from the tissue thickness compensator **1140**. In certain circumstances, the surface modifier **1144** can include a heating element which can be utilized to increase the temperature of the surface **1142** to a temperature greater than or equal to the glass transition temperature of the material composition of the tissue thickness compensator **1140**, as described above.

Referring again to FIG. **30**, the surface modifier **1144** may comprise a flat, or at least substantially flat, contacting surface **1146** for contacting the surface **1142**, for example. In other circumstances, the contacting surface **1146** may comprise various textures such as, for example, protrusions which can extend into the surface **1142** of the tissue thickness compensator **1140** during the modification process. In

certain circumstances, the surface modifier **1144** can be used to apply pressure onto the surface **1142** of the tissue thickness compensator **1140** before the tissue thickness compensator **1140** is transitioned to the glassy state. In certain circumstances, the surface modifier **1144** may apply pressure to the surface **1142** while the tissue thickness compensator **1140** is heated to reach the glassy state, while the tissue thickness compensator **1140** is in the glassy state, and/or while the tissue thickness compensator **1140** is transitioned or cooled to a temperature below the glassy state. In certain circumstances, the pressure applied by the surface modifier **1144** to the surface **1142** can be gradually increased toward a threshold as the temperature of the tissue thickness compensator **1140** is gradually increased to transition the tissue thickness compensator **1140** toward the glassy state, for example. In certain circumstances, the pressure applied to the surface **1142** can be removed, gradually removed, or at least partially reduced as the tissue thickness compensator **1140** exits the glassy state, before the tissue thickness compensator **1140** exits the glassy state, and/or after the tissue thickness compensator **1140** exits the glassy state.

In certain circumstances, the tissue thickness compensator **1140** can be modified or altered to include a skin or a dense outer layer. In certain circumstances, the resulting skin or dense outer layer may comprise textures such as, for example, protrusions which can extend into the surface **1142** of the tissue thickness compensator **1140**. In certain instances, the contacting surface **1146** of the surface modifier **1144** can be heated to a temperature greater than or equal to the melting temperature of the material composition of the tissue thickness compensator **1140**. The surface modifier **1144** and/or the tissue thickness compensator **1140** can be moved to bring the surface **1142** of the tissue thickness compensator **1140** into contact with the heated contacting surface **1146** of the surface modifier **1144** thereby melting, or at least substantially melting, the surface **1142**. The surface modifier **1144** and the tissue thickness compensator **1140** can then be separated to permit the modified surface **1142** to cool below its melting temperature which may create a skin or a dense outer layer onto the tissue thickness compensator **1140**.

In certain instances, the contacting surface **1146** of the surface modifier **1144** can be heated prior to coming in contact with the surface **1142**. In other instances, the contacting surface **1146** of the surface modifier **1144** can be heated after coming in contact with the surface **1142**.

In certain instances, the contacting surface **1146** of the surface modifier **1144** can remain in contact with the surface **1142** of the tissue thickness compensator **1140** for a time period sufficient to allow the surface **1142** to flow into a desired geometry. Such a time period can range from about 30 seconds to about 8 hours, for example; other time periods are contemplated by the present disclosure. Such a time period can be sufficient to locally affect and/or melt the material of the tissue thickness compensator **1140** and have it flow into a new geometry. As described herein, such a new geometry can be prescribed by the tooling used to make the tissue thickness compensator **1140**.

In certain instances, the surface **1142** of the tissue thickness compensator **1140** can be allowed to cool, or can be actively cooled, to a temperature below the melting temperature of the tissue thickness compensator **1140** before separating the surface modifier **1144** from the tissue thickness compensator **1140**. In other instances, the surface **1142** of the tissue thickness compensator **1140** can be allowed to cool, or can be actively cooled, to a temperature below the melting temperature of the tissue thickness compensator **1140** after separating the surface modifier **1144** from the tissue thickness compensator **1140**.

Further to the above, the modified surface **1142** can comprise a density which is approximately 10% greater than the density of the remainder of the tissue thickness compensator **1140**, approximately 20% greater than the density of the remainder of the tissue thickness compensator **1140**, approximately 30% greater than the density of the remainder of the tissue thickness compensator **1140**, approximately 40% greater than the density of the remainder of the tissue thickness compensator **1140**, approximately 50% greater than the density of the remainder of the tissue thickness compensator **1140**, approximately 60% greater than the density of the remainder of the tissue thickness compensator **1140**, approximately 70% greater than the density of the remainder of the tissue thickness compensator **1140**, approximately 80% greater than the density of the remainder of the tissue thickness compensator **1140**, approximately 90% greater than the density of the remainder of the tissue thickness compensator **1140**, and/or approximately 100% greater than the density of the remainder of the tissue thickness compensator **1140**, for example. In various circumstances, the modified surface **1142** can comprise a density which is more than the density of the remainder of the tissue thickness compensator **1140** and less than twice the density of the remainder of the tissue thickness compensator **1140**, for example. In various circumstances, the modified surface **1142** can comprise a density which is over twice the density of the remainder of the tissue thickness compensator **1140**, for example.

Referring now to FIGS. **32-34**, a tissue thickness compensator **1150** can be modified to include a plurality of apertures **1152** which may extend at least partially through the tissue thickness compensator **1150**. The tissue thickness compensator **1150** may be similar in many respects to other tissue thickness compensators described herein such as, for example, the tissue thickness compensator **20220** (FIG. **6**). Like the compensator **20220**, the compensator **1150** can be utilized with the cartridge assembly **20200** (FIG. **6**) and the apertures **1152** may be similar in many respects to the clearance apertures **20224** extending at least partially through the tissue thickness compensator **20220**. For example, like the apertures **20224**, the apertures **1152** can be aligned with corresponding staple legs **20232** (FIG. **7**) when the tissue thickness compensator **1150** is assembled with the cartridge assembly **20200** such that the staple legs **20232** may move through the clearance apertures **1152** in the tissue thickness compensator **1150** when the staple legs **20232** move from the unfired configuration to the fired configuration, as described above in greater detail.

Further to the above, referring again to FIGS. **32-34**, the tissue thickness compensator **1150** can be prepared using traditional lyophilization techniques and/or any other suitable techniques. In certain circumstances, a polymer having a glass transition temperature such as, for example, polylactic acid (PLA) and/or polyglycolic acid (PGA) can be dissolved in an organic solvent to form a solution which can be lyophilized to produce the tissue thickness compensator **1150**. Furthermore, the tissue thickness compensator **1150** can be modified post lyophilization using a thermal pressing process which is similar in many respects to the thermal pressing processes used to modify the tissue thickness compensator **1104**, the tissue thickness compensator **1120**, and/or the tissue thickness compensator **1140**, for example, as described above. For example, the tissue thickness com-

pensator **1150** can be modified to include the apertures **1152** once the tissue thickness compensator **1150** is transitioned to a glassy state.

As described above, a tissue thickness compensator such as, for example, the tissue thickness compensator **1150** can be transitioned to a glassy state by being heated in an oven (not shown) to a temperature greater than or equal to the glass transition temperature of the material composition of the tissue thickness compensator **1150** but less than the melting temperature of the same. A mold **1154** comprising a plurality of posts, dowels, pins, and/or protrusions, for example, such as, for example, needles **1156** can be utilized to create the apertures **1152** by inserting the needles **1156** into the tissue thickness compensator **1150** while the tissue thickness compensator **1150** is in the glassy state. The tissue thickness compensator **1150** can then be allowed to cool to a temperature below the glass transition temperature while the needles **1156** remain inserted into the tissue thickness compensator **1150**. In some instances, the needles **1156** can be removed from the tissue thickness compensator **1150** while the tissue thickness compensator **1150** is in the glassy state. In some instances, a fan can be used to generate a flow of air over the tissue thickness compensator **1150** while the tissue thickness compensator **1150** is engaged with the needles **1156** and/or after the tissue thickness compensator **1150** has been disengaged from the needles **1156**. In some instances, a refrigeration process can be utilized to cool the tissue thickness compensator **1150** while the tissue thickness compensator **1150** is engaged with the needles **1156** and/or after the tissue thickness compensator **1150** has been disengaged from the needles **1156**. In various instances, the needles **1156** can be removed after transitioning the tissue thickness compensator **1150** out of the glassy state. The needles **1156** can remain inserted into the tissue thickness compensator **1150** for a time period sufficient to permit the tissue thickness compensator **1150** to retain, or at least substantially retain, the spaces defining the apertures **1152** which are occupied by the needles **1156**.

In certain examples, the needles **1156** can remain inserted for a period of time from about 30 seconds to about 8 hours, for example, during the time in the glassy state and/or for a period of time from about 30 seconds to about 8 hours, for example, after exiting the glassy state. In at least one example, the needles **1156** can remain inserted for approximately 10 minutes during the time in the glassy state and for approximately 10 minutes after exiting the glassy state. Other time periods for maintaining the needles **1156** inserted into the tissue thickness compensator **1150** are contemplated by the present disclosure.

In certain circumstances, the needles **1156** can be removed from the tissue thickness compensator **1150** prior to transitioning the tissue thickness compensator **1150** out of the glassy state. In other circumstances, the needles **1156** can be gradually removed over time. For example, the needles **1156** can be partially removed from the tissue thickness compensator **1150** prior to transitioning the tissue thickness compensator **1150** out of the glassy state. The needles **1156** can then be fully removed from the tissue thickness compensator **1150** after transitioning the tissue thickness compensator **1150** out of the glassy state. The reader will appreciate that the greater the depth of insertion of the needles **1156** into the tissue thickness compensator **1150**, the greater the depth of the corresponding apertures **1152** that can be created in the tissue thickness compensator **1150**.

Referring again to FIGS. **32-34**, in certain instances, the needles **1156** can be heated to a temperature greater than or equal to the melting temperature of the material composition of the tissue thickness compensator **1150**. In addition, the needles **1156** can be inserted into the tissue thickness compensator **1150** to create the apertures **1152** by melting, or at least partially melting, through the regions of the tissue thickness compensator **1150** that receive the needles **1156**. In various instances, the needles **1156** can be heated prior to their insertion into the tissue thickness compensator **1150**. In various instances, the needles **1156** can be heated after their insertion into the tissue thickness compensator **1150**. In various instances, the needles **1156** can be gradually heated as the needles **1156** are inserted into the tissue thickness compensator **1150**.

In certain instances, the needles **1156** may remain positioned within the tissue thickness compensator **1150** for a period of time sufficient to permit the melted material of the tissue thickness compensator **1150** to flow into a desired geometry. Such a time period can range from about 30 seconds to about 8 hours, for example; other time periods are contemplated by the present disclosure. Such a time period can be sufficient to locally affect and/or melt the material of the tissue thickness compensator **1150** and have it flow into a new geometry. As described herein, such a new geometry can be prescribed by the tooling used to make the tissue thickness compensator **1150**.

In certain instances, the tissue thickness compensator **1150** can be allowed to cool, or can be actively cooled, to a temperature below the melting temperature of the tissue thickness compensator **1150** before separating the needles **1156** from the tissue thickness compensator **1150**. In other instances, the tissue thickness compensator **1150** can be allowed to cool, or can be actively cooled, to a temperature below the melting temperature of the tissue thickness compensator **1150** after separating the needles **1156** from the tissue thickness compensator **1150**.

Referring again to FIGS. **32-34**, the needles **1156** can be arranged in rows extending longitudinally along a length of the mold **1154** which may correspond to staple rows in a staple cartridge such as, for example, the staple cartridge assembly **20200** (FIG. **6**). For example, as illustrated in FIG. **33**, the needles **1156** can are arranged in six rows which can be configured to create six rows of the apertures **1152** that can be configured to receive six rows of the staples **20230** (FIG. **7**). In certain circumstances, as illustrated in FIG. **33**, the rows of the needles **1156** can be arranged in two groups which are spaced apart and configured to be received in two portions **1158** and **1160** of the tissue thickness compensator **1150** thereby creating two groups of the apertures **1152** separated by an intermediate portion **1162**. The intermediate portion **1162** can be positioned, at least partially, over the cartridge knife slot **22015** (FIG. **6**), when the tissue thickness compensator **1150** is assembled with staple cartridge assembly **20200**. In use, the firing member **10052** (FIG. **10**) can be advanced distally to push the staple legs **20232** (FIG. **8**) through the apertures **1152** within the portions **1158** and **1160** and advance the cutting portion **10053** (FIG. **10**) to transect the intermediate portion **1162** and separate the portions **1158** and **1160**.

Referring again to FIGS. **32-34**, the apertures **1152** can be configured to extend within the tissue thickness compensator **1150** and terminate at a certain depth within the tissue thickness compensator **1150**. The apertures **1152** may comprise uniform depths, as illustrated in FIG. **34**. In other circumstances, the apertures **1152** may comprise different depths (not shown). For example, a first row of the apertures **1152** may comprise a first depth and a second row of the apertures **1152** may comprise a second depth different from the first depth and yet a third row of the apertures **1152** may

comprise a third depth different from the first depth and the second depth. The depths of the apertures **1152** can be determined, at least in part, by the heights of the corresponding needles **1156**. For example, a first row of the needles **1156** comprising a first height and a second row of the needles **1156** comprising second height greater than first height may create a first row of the apertures **1152** comprising a first depth and a second row of the apertures **1152** comprising a second depth which is greater than the first depth.

Referring again to FIGS. **32-34**, the needles **1156** can be configured to define a trajectory for the apertures **1152** within the tissue thickness compensator **1150**. In certain circumstances, the needles **1156** can extend along an axis that is perpendicular and/or substantially perpendicular to a mold surface **1164** of the mold **1154**, as illustrated in FIG. **33**. Inserting the needles **1156** into the tissue thickness compensator **1150** while maintaining a parallel relationship between the mold surface **1164** and a surface **1166** of the tissue thickness compensator **1150** may result in defining a perpendicular and/or substantially perpendicular trajectory for the apertures **1152** relative to the surface **1166** of the tissue thickness compensator **1150**, as illustrated in FIG. **34**. In other circumstances, the needles **1156** can extend from the mold surface **1164** at an oblique angle (not shown) and/or the insertion trajectory of the needles **1156** into the tissue thickness compensator **1150** can be at an angle such that the needles **1156** may define a non-perpendicular trajectory for the apertures **1152** relative to the surface **1166** of the tissue thickness compensator **1150**. In certain circumstances, a group of the needles **1156** can be parallel and/or substantially parallel to each other, as illustrated in FIG. **33**, resulting in a group of the apertures **1152** that may be parallel and/or substantially parallel to each other, as illustrated in FIG. **24**. In other circumstances, although not illustrated, a group of non-parallel needles can extend from the mold surface **1164** and may result in non-parallel apertures when inserted into the tissue thickness compensator **1150**. In some circumstances, the needles **1156** can be configured to create apertures within the tissue thickness compensator **1150** that can comprise a partially curved trajectory and/or a partially linear trajectory. For example, the needles **1156** can extend from the mold surface **1164** in a partially curved trajectory and can be inserted into the tissue thickness compensator **1150** to create apertures within the tissue thickness compensator **1150** with a corresponding partially curved trajectory.

Referring again to FIGS. **32-34**, some or all of the needles **1156** can comprise blunt distal ends **1168**, as illustrated in FIG. **33**. In other circumstances, some or all of the needles **1156** can comprise sharp distal ends (not shown). Some or all of the needles **1156** can comprise cylindrical, or at least substantially cylindrical, shapes, for example, as illustrated in FIG. **33**. Other shapes are also contemplated by the present disclosure.

In various instances, one or more of the needles **1156** extending from the mold surface **1164** may not be insertable through the full thickness of the tissue thickness compensator **1150**. In certain instances, one or more of the needles **1156** extending from the mold surface **1164** can be insertable through the full thickness of the tissue thickness compensator **1150** to create openings an/or holes that extend through the full thickness of the tissue thickness compensator **1150**. In certain instances, one or more of the needles **1156** extending from the mold surface **1164** can be inserted through a first side of the tissue thickness compensator **1150** and exited through a second side of the tissue thickness compensator **1150** which may be opposite the first side, for example. In certain instances, one or more of the needles **1156** may comprise a length greater than the full thickness of the tissue thickness compensator **1150** to facilitate the insertion of the one or more needles **1156** through the full thickness of the tissue thickness compensator **1150**.

Referring now to FIGS. **35-37**, it may be desirable to resize a tissue thickness compensator. For example, one or more dimensions of a tissue thickness compensator may be adjusted to correspond to dimensions of a staple cartridge in order to provide a better fit to the staple cartridge when the tissue thickness compensator is assembled with the staple cartridge. In certain circumstances, a tissue thickness compensator **1170** can be resized by changing its height from a first height H**1**, as illustrated in FIG. **35**, to a second height H**2**, as illustrated in FIG. **36**. The tissue thickness compensator **1170** may be similar in many respects to other tissue thickness compensators described herein such as, for example, the tissue thickness compensator **22020** (FIG. **9**), the tissue thickness compensator **1140** (FIG. **29**), and/or the tissue thickness compensator **1150** (FIG. **32**). For example, like the compensator **22020**, the compensator **1170** can be utilized with the end effector **22090** (FIG. **9**).

In various instances, referring again to FIGS. **35-37**, the tissue thickness compensator **1170** can be prepared using traditional lyophilization techniques and/or any other suitable techniques. In certain instances, the tissue thickness compensator **1170** can be resized, as illustrated in FIG. **37**, using a thermal pressing process and a mold **1172**, for example. The mold **1172** may comprise a receiver **1174** configured to receive the tissue thickness compensator **1170** and an adjustment member **1176** which can be partially insertable into the receiver **1174**. The tissue thickness compensator **1170** can be resized when the tissue thickness compensator **1170** is transitioned into a glassy state. In one embodiment, the tissue thickness compensator **1170** can be heated in an oven (not shown) to a temperature greater than or equal to a glass transition temperature of the material composition of the tissue thickness compensator **1170** but less than the melting temperature of the same. In another embodiment, the receiver **1174** and/or the adjustment member **1176** may comprise a heating element for transitioning the tissue thickness compensator **1170** to the glassy state. The adjustment member **1176** can then be inserted into the receiver **1174***a* distance H**3**, for example, as illustrated in FIG. **37**, thereby compressing the tissue thickness compensator **1170** and reducing its height from the first height H**1** to the second height H**2**. In some instances, the adjustment member **1176** can be inserted into the receiver **1174** before the tissue thickness compensator **1170** enters into the glassy state or just as the tissue thickness compensator **1170** enters into the glassy state. The adjustment member **1176** can be held against the tissue thickness compensator **1170** to compress the tissue thickness compensator **1170** for a time period sufficient to permit the tissue thickness compensator **1170** to retain, or at least substantially retain, the second height H**2**, as illustrated in FIG. **36**. The tissue thickness compensator **1170** can then be allowed to cool to a temperature below the glass transition temperature while under compression from the adjustment member **1176**. After transitioning the tissue thickness compensator **1170** out of the glassy state, the adjustment member **1176** can be retracted. In some instances, the adjustment member **1176** can be retracted before the tissue thickness compensator **1170** exits the glassy state. In certain circumstances, the above described resizing process can be utilized to change another dimension of the tissue thickness compensator **1170** such as

a length or a width of the tissue thickness compensator **1170**, for example. In some circumstances, these dimensions can be modified simultaneously or modified sequentially.

In certain examples, the compression from the adjustment member **1176** can be maintained for a period of time from about 30 seconds to about 8 hours, for example, during the time in the glassy state and/or for a period of time from about 30 seconds to about 8 hours, for example, after exiting the glassy state. In at least one example, the compression from the adjustment member **1176** can be maintained for approximately 10 minutes during the time in the glassy state and for approximately 10 minutes after exiting the glassy state. Other time periods for maintaining the compression imposed by the adjustment member **1176** against the tissue thickness compensator **1170** are contemplated by the present disclosure.

In certain circumstances, the adjustment member **1176** can be used to apply pressure onto the tissue thickness compensator **1170** before the tissue thickness compensator **1170** is transitioned to the glassy state. In certain circumstances, the adjustment member **1176** may apply pressure to the tissue thickness compensator **1170** while the tissue thickness compensator **1170** is heated to reach the glassy state, while the tissue thickness compensator **1170** is in the glassy state, and/or while the tissue thickness compensator **1170** is transitioned or cooled to a temperature below the glassy state. In certain circumstances, the pressure applied to the tissue thickness compensator **1170** can be gradually increased toward a threshold as the temperature of the tissue thickness compensator **1170** is gradually transitioned toward the glassy state, for example. In certain circumstances, the pressure applied to the tissue thickness compensator **1170** can be removed, gradually removed, or at least partially reduced as the tissue thickness compensator **1170** exits the glassy state, before the tissue thickness compensator **1170** exits the glassy state, and/or after the tissue thickness compensator **1170** exits the glassy state.

The reader will appreciate that the different molds utilized in the modification processes described above such as, for example, the molds **1144**, **1154**, and/or **1172** are illustrative examples. Other mold designs and configurations can also be employed to manipulate tissue thickness compensators in a variety of ways. Furthermore, the forces involved in manipulating a tissue thickness compensator need not only be compressive forces. For example, tensile forces can also be utilized to modify, reshape, and/or resize a tissue thickness compensator in similar manners to those described above. For example, the tissue thickness compensator **1170** can be stretched using tensile forces to reduce its height from the first height H**1** (FIG. **35**) to the second height H**2** (FIG. **36**), for example, using a modification process that is similar in many respects to the modification processes described above. In certain circumstances, combinations of tensile and compressive forces can be used to manipulate a tissue thickness compensator during a modification process.

Referring again to FIGS. **35-37**, it may be desirable to modify the porosity of a tissue thickness compensator for use in a surgical procedure. A tissue thickness compensator may comprise a porous, open cell foam and/or a porous, closed cell foam, for example. Traditional lyophilization techniques may provide some control over a tissue thickness compensator's porosity but such control may not be easily reproducible and may need additional fine adjustments that may not be obtainable by traditional lyophilization techniques. As illustrated in FIGS. **35-37**, the height of the tissue thickness compensator **1170** can be changed from the first height H**1** (FIG. **35**) to the second height H**2** (FIG. **36**), for example, using the modification process described above. In addition, porosity of the tissue thickness compensator **1170** can also be modified using the same and/or a similar modification process. For example, the tissue thickness compensator **1170** may comprise a first porosity (FIG. **35**) prior to the modification process and a second porosity (FIG. **36**) after completion of the modification process, as described above. The change in porosity can be attributed, at least in part, to the compressive forces and/or the energy applied to the tissue thickness compensator **1170** by the adjustment member **1176** during the modification process described above.

Further to the above, the tissue thickness compensator **1170** may comprise a plurality of pores **1180**. Some or all of the pores **1180** may be altered in position, size, and/or shape, for example, as a result of the modification process described above. For example, one or more of the pores **1180** may comprise a spherical, or substantially spherical, shape prior to the modification process which may be altered to an oval, or substantially oval, shape as a result of the modification process. In at least one example, one or more of the pores **1180** may comprise a first size prior to the modification process and a second size different from the first size as a result of the modification process. In certain circumstances, as described below in greater detail, the porosity changes can be localized to one or more regions or zones of the tissue thickness compensator **1170**.

Furthermore, in certain circumstances, the change in porosity of the tissue thickness compensator **1170** may be accompanied by a change in density of the tissue thickness compensator **1170**. In other words, as the adjustment member **1176** is advanced against the tissue thickness compensator **1170**, compressive forces may reduce space occupied by the tissue thickness compensator **1170** thereby causing material and/or pore redistribution which may yield an increase in the density of the tissue thickness compensator **1170** and/or a reduction in its porosity. In certain circumstances, as described below in greater detail, the density changes can be localized to one or more regions or zones of the tissue thickness compensator **1170**.

Further to the above, the change in porosity and/or density of the tissue thickness compensator **1170** may yield a change in the spring rate of the tissue thickness compensator **1170**. A tissue thickness compensator's spring rate can influence its ability to compensate for tissue thickness when the tissue thickness compensator is deployed against tissue captured by staples such as, for example, the staples **20230** (FIG. **8**), as described above in greater detail. Furthermore, a tissue thickness compensator's spring rate can also influence its ability to apply pressure against tissue captured with the tissue thickness compensator by a staple. In other words, a change in a tissue thickness compensator's spring rate may change the pressure exerted by the tissue thickness compensator against tissue captured by a staple. Since different tissue types may respond more positively to certain pressures, fine control over a tissue thickness compensator's spring rate can be advantageous.

As illustrated in FIGS. **35-37**, the tissue thickness compensator **1170** may comprise a first spring rate (FIG. **35**) which may be altered or modified to a second spring rate (FIG. **36**) different from the first spring rate using the modification process described above. For example, as described above, the adjustment member **1176** can be advanced against the tissue thickness compensator **1170** while the tissue thickness compensator **1170** is in the glassy state. In response, the tissue thickness compensator **1170** may be compressed which may cause a change in the spring

rate of the tissue thickness compensator **1170**. The adjustment member **1176** can be retained in the advanced position for a period of time sufficient to permit the tissue thickness compensator **1170** to retain, or at least substantially retain, the change in spring rate. In addition, the tissue thickness compensator **1170** can be allowed to cool below the glass transition temperature of its material composition while maintaining the pressure applied by the adjustment member **1176** against the tissue thickness compensator **1170**.

In certain instances, the adjustment member **1176** can be maintained in the advanced position against the tissue thickness compensator **1170** for a period of time from about 30 seconds to about 8 hours, for example, during the time in the glassy state and/or for a period of time from about 30 seconds to about 8 hours, for example, after exiting the glassy state. In at least one example, the adjustment member **1176** can be maintained in the advanced position against the tissue thickness compensator **1170** for approximately 10 minutes during the time in the glassy state and for approximately 10 minutes after exiting the glassy state. Other time periods for maintaining the adjustment member **1176** in the advanced position against the tissue thickness compensator **1170** are contemplated by the present disclosure.

In certain circumstances, the adjustment member **1176** can be used to apply pressure onto the tissue thickness compensator **1170** to change the spring rate of the tissue thickness compensator **1170** before the tissue thickness compensator **1170** is transitioned to the glassy state. In certain circumstances, the adjustment member **1176** may apply pressure to the tissue thickness compensator **1170** while the tissue thickness compensator **1170** is heated to reach the glassy state, while the tissue thickness compensator **1170** is in the glassy state, and/or while the tissue thickness compensator **1170** is transitioned or cooled to a temperature below the glassy state. In certain circumstances, the pressure applied to the tissue thickness compensator **1170** can be gradually increased toward a threshold as the temperature of the tissue thickness compensator **1170** is gradually increased to transition the tissue thickness compensator **1170** toward the glassy state, for example. In certain circumstances, the pressure applied to the tissue thickness compensator **1170** can be removed, gradually removed, or at least partially reduced as the tissue thickness compensator **1170** exits the glassy state, before the tissue thickness compensator **1170** exits the glassy state, and/or after the tissue thickness compensator **1170** exits the glassy state.

Referring again to FIGS. **35-40**, the tissue thickness compensator **1170** may be manufactured with a native spring rate using traditional lyophilization techniques and/or any other suitable techniques. As described above, the spring rate of the tissue thickness compensator **1170** can influence its ability to apply pressure against tissue captured with the tissue thickness compensator **1170** by a staple. The modification process described above may be utilized to adjust the native spring rate of the tissue thickness compensator **1170** to adjust its ability to apply pressure against tissue captured with the tissue thickness compensator **1170** by the staple. In certain circumstances, the native spring rate of the tissue thickness compensator **1170** can be increased from a first spring rate at point A (FIG. **40**) to a second spring rate including and up to a maximum spring rate at point B (FIG. **40**). In certain circumstances, such increase of the spring rate of the tissue thickness compensator **1170** can be achieved by applying compression forces to the tissue thickness compensator **1170** using the adjustment member **1176** while the tissue thickness compensator **1170** is in the glassy state, as explain in the modification process described above. As illustrated in FIG. **40**, the point B represents a maximum elastic yield of the tissue thickness compensator **1170**. As such, any additional compression applied by the adjustment member **1176** to the tissue thickness compensator **1170** beyond a threshold compression at the point B may produce a decrease in the spring rate of the modified tissue thickness compensator **1170**. For example, as illustrated in FIG. **40**, the spring rate at the point C is lower than the spring rate at the point B even though the compression force applied by the adjustment member **1176** to the tissue thickness compensator **1170** at point C is greater than the compression force applied at the point B.

As discussed above, one or more processes can be used to affect the spring rate, and/or any other property, of a material used in conjunction with a fastener cartridge and/or a surgical fastening instrument, for example. The spring rate, and/or any other property, of the material may change throughout the modification process or processes. Such a change may be gradual in some circumstances, while in other circumstances, the change may be sudden. In various instances, one or more of the steps of the modification process may cause an increase in the spring rate of the material while one or more steps may cause a decrease in the spring rate of the material. Ultimately, the net change in the spring rate can be measured as a comparison between an original spring rate before the modification process begins and a subsequent spring rate after the modification process has been completed. In various instances, a material may comprise an altered spring rate after the material has been heated and then cooled.

In certain circumstances, it may be desirable to apply one or more of the above described modification processes to a tissue thickness compensator. For example, a first modification process can be utilized to modify porosity of the tissue thickness compensator, as described above with respect to the tissue thickness compensator **1170**. A second modification process, following the first modification process, can be utilized to alter a surface of the tissue thickness compensator, as described above with respect to the tissue thickness compensator **1140**. Furthermore, a third modification process can be utilized to modify the tissue thickness compensator to include a longitudinal slot similar to the longitudinal slot **1122** of the tissue thickness compensator **1120**. In yet a fourth modification process, the tissue thickness compensator can be modified to include apertures similar to the apertures **1152** of the tissue thickness compensator **1150**. The reader will appreciate that some of above mentioned modifications can be combined or grouped in a single modification process. For example, a mold can be designed to include the needles **1156** of the mold **1154** and the central beam **1128** of the mold **1126**. Other modification arrangements are contemplated by the present disclosure.

Referring now to FIGS. **38** and **39**, a tissue thickness compensator such as, for example, tissue thickness compensator **1190** can be altered or modified using one or more of the modification processes described above to include portions with different spring rates, porosities, and/or densities. In certain circumstances, the tissue thickness compensator **1190** can be modified using one or more of the modification processes described above to include a gradient pore morphology (i.e. small pores gradually increasing in size to large pores across the thickness of the tissue thickness compensator **1190** in one direction). Such morphology could be more optimal for tissue in-growth or hemostatic behavior. Further, the gradient could also be compositional with a varying bio-absorption profile. A short term absorption

profile may be preferred to address hemostasis while a long term absorption profile may address better tissue healing without leakages.

Referring again to FIGS. **38** and **39**, the tissue thickness compensator **1190** may include one or more zone geometries that are different from the remainder of the tissue thickness compensator **1196**. For example, as illustrated in FIG. **38**, the tissue thickness compensator **1190** may include one or more protruding portions such as, for example, protruding portion **1196**. In addition, the tissue thickness compensator **1190** may comprise a uniform, or at least a substantially uniform, first spring rate, first porosity, and/or first density through the tissue thickness compensator **1190** including the one or more zone geometries, as illustrated in FIG. **38**. In certain circumstances, the tissue thickness compensator **1190** can be altered or modified using one or more of the modification processes described above to alter or modify the one or more zone geometries and/or to induce localized changes in the first spring rate, the first porosity, and/or the first density, for example. The modified tissue thickness compensator **1190** may comprise one or more modified zones with different spring rates, porosities, and/or densities from other modified zones and/or the first spring rate, the first porosity, and/or the first density, respectively, of the remainder of the tissue thickness compensator **1190**. In certain circumstances, the resulting one or more modified zones may correspond to the one or more zone geometries. For example, as illustrated in FIG. **39**, the tissue thickness compensator **1190** may be altered or modified to level, or at least substantially level, the protruding portion **1196** and to form a flat, or at least a substantially flat, surface **1198**, for example. The modified tissue thickness compensator **1190** may include a first portion **1192** comprising the first spring rate, the first porosity, and/or the first density and a second portion **1194** comprising a second spring rate, a second porosity, and/or a second density, which can be different from the first spring rate, the first porosity, and/or the first density, respectively. The second portion **1194** may correspond to the protruding portion **1196** and can result from the leveling, or at least substantially leveling, of the protruding portion **1196** to form the flat, or at least substantially flat, surface **1198**, for example. In certain respects, the geometry of the protruding portion **1196** prior to the modification of the tissue thickness compensator **1190** mirrors, matches, or resembles the geometry of the second portion **1194** after the tissue thickness compensator **1190** has been modified.

Referring again to FIGS. **37-39**, the tissue thickness compensator **1190** can be altered or modified using the mold **1172**, in a similar manner to the tissue thickness compensator **1170**. For example, the tissue thickness compensator **1190** can be heated in the receiver **1174** to a temperature greater than or equal to a glass transition temperature of the material composition of the tissue thickness compensator **1190** but less than the melting temperature of the same. In certain circumstances, the adjustment member **1176** can be advanced against the protruding portion **1196**, while the tissue thickness compensator **1190** is in the glassy state, thereby compressing the protruding portion **1196** and rearranging its geometry to form the second portion **1194**, as illustrated in FIG. **39**. Further to the above, the adjustment member **1176** can be configured to maintain compression against the protruding portion **1196** for a time period sufficient to permit the tissue thickness compensator **1190** to retain, or at least substantially retain, the modification imposed by the adjustment member **1176**. The tissue thickness compensator **1190** can be allowed to cool or can be actively cooled to a temperature below its glass transition temperature while under compression from the adjustment member **1176**. After transitioning the tissue thickness compensator **1190** out of the glassy state, the adjustment member **1190** can be retracted. The tissue thickness compensator **1190** may retain, or at least substantially retain, the second portion **1194**, as illustrated in FIG. **39**. In certain circumstances, the adjustment member **1176** may apply pressure onto the protruding portion **1196** while the tissue thickness compensator **1190** is heated to reach the glassy state, while the tissue thickness compensator **1190** is in the glassy state, and/or while the tissue thickness compensator **1190** is transitioned or cooled to a temperature below the glassy state. In certain circumstances, the pressure applied to the protruding portion **1196** of the tissue thickness compensator **1190** can be gradually increased toward a threshold as the temperature of the tissue thickness compensator **1190** is gradually increased to transition the tissue thickness compensator **1190** toward the glassy state, for example. In certain circumstances, the pressure applied to the protruding portion **1196** of the tissue thickness compensator **1190** can be removed, gradually removed, or at least partially reduced as the tissue thickness compensator **1190** exits the glassy state, before the tissue thickness compensator **1190** exits the glassy state, and/or after the tissue thickness compensator **1190** exits the glassy state.

Referring now to FIGS. **41-43**, a tissue thickness compensator such as, for example, tissue thickness compensator **1200** can be prepared using traditional lyophilization techniques and/or any other suitable techniques. In addition, the tissue thickness compensator **1200** can be modified or altered for use in a surgical procedure, for example. The tissue thickness compensator **1200** can be similar in many respects to other tissue thickness compensators such as, for example, the tissue thickness compensator **22020** (FIG. **9**) and/or the tissue thickness compensator **1120** (FIG. **26**). For example, like the tissue thickness compensator **22020**, the tissue thickness compensator **1200** can be utilized with the end effector **22090**. Furthermore, as illustrated in FIGS. **41-43**, the tissue thickness compensator **1200** can be modified to include a longitudinal slot **1202** which, like the knife slot **22025**, may define a tissue thickness compensator knife path for the cutting portion **10053** between a first stapling portion **1204***a* and a second stapling portion **1204***b*. Furthermore, the first stapling portion **1204***a* and the second stapling portion **1204***b* can be similar in many respects to the first stapling portion **22021***a* (FIG. **9**) and the second stapling portion **22021***b* (FIG. **9**) of the tissue thickness compensator **22020**. In addition, the slot **1202** can be configured to releasably connect the first stapling portion **1204***a* and the second stapling portion **1204***b* such that, in use with the end effector **22090**, the cutting portion **10053** can be advanced distally through the slot **1202** to transect the slot **1202** and separate the first stapling portion **1204***a* and the second stapling portion **1204***b*.

Referring again to FIGS. **41-43**, the tissue thickness compensator **1200** can be modified prior to assembly with an end effector such as, for example, the end effector **22090** (FIG. **9**). Alternatively, the tissue thickness compensator **1200** can be modified after it has been assembled with an end effector. As described above, the tissue thickness compensator **1200** can be prepared using traditional lyophilization techniques and/or any other suitable techniques. A space creator **1206** can be utilized to modify the tissue thickness compensator **1200** in a thermal pressing process, as illustrated in FIGS. **41-43**. For example, the space creator **1206** can be heated to a temperature greater than or equal to a melting temperature of the material composition of the

tissue thickness compensator **1200**. The space creator **1206** can then be aligned with and inserted into the tissue thickness compensator **1200** to form the longitudinal slot **1202**. The space creator **1206** may melt through the tissue thickness compensator **1200** to create space for the longitudinal slot **1202**. The space creator **1206** can be retracted upon reaching a desired depth within the tissue thickness compensator **1200**. In certain circumstances, the thermal pressing process can be repeated by reinserting the heated space creator **1206** through the tissue thickness compensator **1200** to widen the space created for the longitudinal slot **1202**.

Referring again to FIGS. **41-43**, the space creator **1206** may comprise a hot wire. For example, the space creator **1206** may comprise a thin, taut metal wire, which can be made of nichrome or stainless steel, for example, or a thicker wire preformed into a desired shape. The hot wire can be heated via electrical resistance to a desired temperature. As the hot wire of the space creator **1206** is passed through the material of the tissue thickness compensator **1200**, the heat from the hot wire may vaporize the material just in advance of contact. In certain circumstances, the hot wire may comprise a cylindrical, or substantially cylindrical, shape, as illustrated in FIG. **42**. The depth of the longitudinal slot **1202** can depend, in part, on the insertion depth of the space creator **1206** through the tissue thickness compensator **1200** and the width of the longitudinal slot **1202** can depend, in part, on the diameter of the hot wire of the space creator **1206**.

In certain instances, the space creator **1206** can be partially inserted through the full thickness of the tissue thickness compensator. In certain instances, the space creator **1206** can be completely inserted through the full thickness of the tissue thickness compensator **1200** to create openings, holes, and/or slots extending through the full thickness of the tissue thickness compensator **1200**. In certain instances, the space creator **1206** may be inserted through a first side of the tissue thickness compensator **1200** and exited through a second side of the tissue thickness compensator **1200** which may be opposite the first side, for example.

Many processes are disclosed herein which utilize thermal energy to modify a tissue thickness compensator. Such processes can be referred to as felting processes. In certain instances, a felting process may also utilize the application of compressive and/or tensile forces to a tissue thickness compensator. In other instances, a felting process may not utilize the application of compressive and/or tensile forces to a tissue thickness compensator. In either event, the felting processes disclosed herein can also be utilized to modify and suitable implantable layer and/or buttress material, for example.

In various circumstances, the tissue thickness compensator assembly may comprise a polymeric composition. The polymeric composition may comprise one or more synthetic polymer and/or one or more non-synthetic polymer. The synthetic polymer may comprise a synthetic absorbable polymer and/or a synthetic non-absorbable polymer. In various circumstances, the polymeric composition may comprise a biocompatible foam, for example. The biocompatible foam may comprise a porous, open cell foam and/or a porous, closed cell foam, for example. The biocompatible foam can have a uniform pore morphology or may have a gradient pore morphology (i.e. small pores gradually increasing in size to large pores across the thickness of the foam in one direction). In various circumstances, the polymeric composition may comprise one or more of a porous scaffold, a porous matrix, a gel matrix, a hydrogel matrix, a solution matrix, a filamentous matrix, a tubular matrix, a composite matrix, a membranous matrix, a biostable polymer, and a biodegradable polymer, and combinations thereof. For example, the tissue thickness compensator assembly may comprise a foam reinforced by a filamentous matrix or may comprise a foam having an additional hydrogel layer that expands in the presence of bodily fluids to further provide the compression on the tissue. In various circumstances, a tissue thickness compensator assembly could also be comprised of a coating on a material and/or a second or third layer that expands in the presence of bodily fluids to further provide the compression on the tissue. Such a layer could be a hydrogel that could be a synthetic and/or naturally derived material and could be either biodurable and/or biodegradable, for example. In certain circumstances, a tissue thickness compensator assembly could be reinforced with fibrous non-woven materials or fibrous mesh type elements, for example, that can provide additional flexibility, stiffness, and/or strength. In various circumstances, a tissue thickness compensator assembly that has a porous morphology which exhibits a gradient structure such as, for example, small pores on one surface and larger pores on the other surface. Such morphology could be more optimal for tissue in-growth or hemostatic behavior. Further, the gradient could be also compositional with a varying bio-absorption profile. A short term absorption profile may be preferred to address hemostasis while a long term absorption profile may address better tissue healing without leakages.

Examples of non-synthetic polymers include, but are not limited to, lyophilized polysaccharide, glycoprotein, elastin, proteoglycan, gelatin, collagen, and oxidized regenerated cellulose (ORC). Examples of synthetic absorbable polymers include, but are not limited to, poly(lactic acid) (PLA), poly(L-lactic acid) (PLLA), polycaprolactone (PCL), polyglycolic acid (PGA), poly(trimethylene carbonate) (TMC), polyethylene terephthalate (PET), polyhydroxyalkanoate (PHA), a copolymer of glycolide and ϵ-caprolactone (PGCL), a copolymer of glycolide and-trimethylene carbonate, poly(glycerol sebacate) (PGS), polydioxanone, poly(orthoesters), polyanhydrides, polysaccharides, poly (ester-amides), tyrosine-based polyarylates, tyrosine-based polyiminocarbonates, tyrosine-based polycarbonates, poly (D,L-lactide-urethane), poly(B-hydroxybutyrate), poly(E-caprolactone), polyethyleneglycol (PEG), poly[bis(carboxylatophenoxy)phosphazene], poly(amino acids), pseudo-poly (amino acids), absorbable polyurethanes, and combinations thereof. In various circumstances, the polymeric composition may comprise from approximately 50% to approximately 90% by weight of the polymeric composition of PLLA and approximately 50% to approximately 10% by weight of the polymeric composition of PCL, for example. In at least one embodiment, the polymeric composition may comprise approximately 70% by weight of PLLA and approximately 30% by weight of PCL, for example. In various circumstances, the polymeric composition may comprise from approximately 55% to approximately 85% by weight of the polymeric composition of PGA and 15% to 45% by weight of the polymeric composition of PCL, for example. In at least one embodiment, the polymeric composition may comprise approximately 65% by weight of PGA and approximately 35% by weight of PCL, for example. In various circumstances, the polymeric composition may comprise from approximately 90% to approximately 95% by weight of the polymeric composition of PGA and approximately 5% to approximately 10% by weight of the polymeric composition of PLA, for example.

In various circumstances, the synthetic absorbable polymer may comprise a bioabsorbable, biocompatible elasto-

meric copolymer. Suitable bioabsorbable, biocompatible elastomeric copolymers include but are not limited to copolymers of epsilon-caprolactone and glycolide (preferably having a mole ratio of epsilon-caprolactone to glycolide of from about 30:70 to about 70:30, preferably 35:65 to about 65:35, and more preferably 45:55 to 35:65); elastomeric copolymers of epsilon-caprolactone and lactide, including L-lactide, D-lactide blends thereof or lactic acid copolymers (preferably having a mole ratio of epsilon-caprolactone to lactide of from about 35:65 to about 65:35 and more preferably 45:55 to 30:70) elastomeric copolymers of p-dioxanone (1,4-dioxan-2-one) and lactide including L-lactide, D-lactide and lactic acid (preferably having a mole ratio of p-dioxanone to lactide of from about 40:60 to about 60:40); elastomeric copolymers of epsilon-caprolactone and p-dioxanone (preferably having a mole ratio of epsilon-caprolactone to p-dioxanone of from about 30:70 to about 70:30); elastomeric copolymers of p-dioxanone and trimethylene carbonate (preferably having a mole ratio of p-dioxanone to trimethylene carbonate of from about 30:70 to about 70:30); elastomeric copolymers of trimethylene carbonate and glycolide (preferably having a mole ratio of trimethylene carbonate to glycolide of from about 30:70 to about 70:30); elastomeric copolymer of trimethylene carbonate and lactide including L-lactide, D-lactide, blends thereof or lactic acid copolymers (preferably having a mole ratio of trimethylene carbonate to lactide of from about 30:70 to about 70:30) and blends thereof. In one embodiment, the elastomeric copolymer is a copolymer of glycolide and epsilon-caprolactone. In another embodiment, the elastomeric copolymer is a copolymer of lactide and epsilon-caprolactone.

The disclosures of U.S. Pat. No. 5,468,253, entitled ELASTOMERIC MEDICAL DEVICE, which issued on Nov. 21, 1995, and U.S. Pat. No. 6,325,810, entitled FOAM BUTTRESS FOR STAPLING APPARATUS, which issued on Dec. 4, 2001, are hereby incorporated by reference in their respective entireties.

In various circumstances, the synthetic absorbable polymer may comprise one or more of 90/10 poly(glycolide-L-lactide) copolymer, commercially available from Ethicon, Inc. under the trade designation VICRYL (polyglactic 910), polyglycolide, commercially available from American Cyanamid Co. under the trade designation DEXON, polydioxanone, commercially available from Ethicon, Inc. under the trade designation PDS, poly(glycolide-trimethylene carbonate) random block copolymer, commercially available from American Cyanamid Co. under the trade designation MAXON, 75/25 poly(glycolide-E-caprolactone-poliglecaprolactone 25) copolymer, commercially available from Ethicon under the trade designation MONOCRYL, for example.

Examples of synthetic non-absorbable polymers include, but are not limited to, foamed polyurethane, polypropylene (PP), polyethylene (PE), polycarbonate, polyamides, such as nylon, polyvinylchloride (PVC), polymethylmetacrylate (PMMA), polystyrene (PS), polyester, polyetheretherketone (PEEK), polytetrafluoroethylene (PTFE), polytrifluorochloroethylene (PTFCE), polyvinylfluoride (PVF), fluorinated ethylene propylene (FEP), polyacetal, polysulfone, and combinations thereof. The synthetic non-absorbable polymers may include, but are not limited to, foamed elastomers and porous elastomers, such as, for example, silicone, polyisoprene, and rubber. In various circumstances, the synthetic polymers may comprise expanded polytetrafluoroethylene (ePTFE), commercially available from W. L. Gore & Associates, Inc. under the trade designation GORE-TEX Soft Tissue Patch and co-polyetherester urethane foam commercially available from Polyganics under the trade designation NASOPORE.

The polymeric composition of a tissue thickness compensator assembly may be characterized by percent porosity, pore size, and/or hardness, for example. In various circumstances, the polymeric composition may have a percent porosity from approximately 30% by volume to approximately 99% by volume, for example. In certain circumstances, the polymeric composition may have a percent porosity from approximately 60% by volume to approximately 98% by volume, for example. In various circumstances, the polymeric composition may have a percent porosity from approximately 85% by volume to approximately 97% by volume, for example. In at least one embodiment, the polymeric composition may comprise approximately 70% by weight of PLLA and approximately 30% by weight of PCL, for example, and can comprise approximately 90% porosity by volume, for example. In at least one such embodiment, as a result, the polymeric composition would comprise approximately 10% copolymer by volume. In at least one embodiment, the polymeric composition may comprise approximately 65% by weight of PGA and approximately 35% by weight of PCL, for example, and can have a percent porosity from approximately 93% by volume to approximately 95% by volume, for example. In various circumstances, the polymeric composition may comprise a greater than 85% porosity by volume. The polymeric composition may have a pore size from approximately 5 micrometers to approximately 2000 micrometers, for example. In various circumstances, the polymeric composition may have a pore size between approximately 10 micrometers to approximately 100 micrometers, for example. In at least one such embodiment, the polymeric composition can comprise a copolymer of PGA and PCL, for example. In certain circumstances, the polymeric composition may have a pore size between approximately 100 micrometers to approximately 1000 micrometers, for example. In at least one such embodiment, the polymeric composition can comprise a copolymer of PLLA and PCL, for example. According to certain aspects, the hardness of a polymeric composition may be expressed in terms of the Shore Hardness, which can defined as the resistance to permanent indentation of a material as determined with a durometer, such as a Shore Durometer. In order to assess the durometer value for a given material, a pressure is applied to the material with a durometer indenter foot in accordance with ASTM procedure D2240-00, entitled, "Standard Test Method for Rubber Property-Durometer Hardness", the entirety of which is incorporated herein by reference. The durometer indenter foot may be applied to the material for a sufficient period of time, such as 15 seconds, for example, wherein a reading is then taken from the appropriate scale. Depending on the type of scale being used, a reading of 0 can be obtained when the indenter foot completely penetrates the material, and a reading of 100 can be obtained when no penetration into the material occurs. This reading is dimensionless. In various circumstances, the durometer may be determined in accordance with any suitable scale, such as Type A and/or Type OO scales, for example, in accordance with ASTM D2240-00. In various circumstances, the polymeric composition of a tissue thickness compensator assembly may have a Shore A hardness value from approximately 4 A to approximately 16 A, for example, which is approximately 45 OO to approximately 65 OO on the Shore OO range. In at least one such embodiment, the polymeric composition can comprise a PLLA/PCL copolymer or a

PGA/PCL copolymer, for example. In various circumstances, the polymeric composition of a tissue thickness compensator assembly may have a Shore A Hardness value of less than 15 A. In various circumstances, the polymeric composition of a tissue thickness compensator assembly may have a Shore A Hardness value of less than 10 A. In various circumstances, the polymeric composition of a tissue thickness compensator assembly may have a Shore A Hardness value of less than 5 A. In certain circumstances, the polymeric material may have a Shore OO composition value from approximately 35 OO to approximately 75 OO, for example.

In various circumstances, the polymeric composition may have at least two of the above-identified properties. In various circumstances, the polymeric composition may have at least three of the above-identified properties. The polymeric composition may have a porosity from 85% to 97% by volume, a pore size from 5 micrometers to 2000 micrometers, and a Shore A hardness value from 4 A to 16 A and Shore OO hardness value from 45 OO to 65 OO, for example. In at least one embodiment, the polymeric composition may comprise 70% by weight of the polymeric composition of PLLA and 30% by weight of the polymeric composition of PCL having a porosity of 90% by volume, a pore size from 100 micrometers to 1000 micrometers, and a Shore A hardness value from 4 A to 16 A and Shore OO hardness value from 45 OO to 65 OO, for example. In at least one embodiment, the polymeric composition may comprise 65% by weight of the polymeric composition of PGA and 35% by weight of the polymeric composition of PCL having a porosity from 93% to 95% by volume, a pore size from 10 micrometers to 100 micrometers, and a Shore A hardness value from 4 A to 16 A and Shore OO hardness value from 45 OO to 65 OO, for example.

In various circumstances, the polymeric composition may comprise a pharmaceutically active agent. The polymeric composition may release a therapeutically effective amount of the pharmaceutically active agent. In various circumstances, the pharmaceutically active agent may be released as the polymeric composition is desorbed/absorbed. In various circumstances, the pharmaceutically active agent may be released into fluid, such as, for example, blood, passing over or through the polymeric composition. Examples of pharmaceutically active agents may include, but are not limited to, hemostatic agents and drugs, such as, for example, fibrin, thrombin, and oxidized regenerated cellulose (ORC); anti-inflammatory drugs, such as, for example, diclofenac, aspirin, naproxen, sulindac, and hydrocortisone; antibiotic and antimicrobial drug or agents, such as, for example, triclosan, ionic silver, ampicillin, gentamicin, polymyxin B, chloramphenicol; and anticancer agents, such as, for example, cisplatin, mitomycin, adriamycin.

Various methods are disclosed herein for altering a tissue thickness compensator. Such methods could be used to alter any suitable layer for use with a fastener cartridge and/or a surgical fastening instrument, for example. Such a layer can comprise a less than one hundred percent dense composition which can be created utilizing any suitable process. For instance, such processes can include, for example, extruding, injection molding, weaving, lyophilization, gas-foaming, and/or melt-blowing processes. Some processes may produce a foam while other processes may not produce a foam; however, in any event, all such embodiments are contemplated for use with all of the embodiments disclosed herein.

In various embodiments, referring to FIGS. **44-46**, an end effector of a surgical fastening instrument, such as end effector **100**, for example, can be configured to capture, fasten, and/or incise tissue. The end effector **100** can include a fastener cartridge **110** and, in addition, a firing member **140** which can be advanced through the fastener cartridge **110** to deploy staples removably stored within the staple cartridge **110** into tissue captured within the end effector **100**. In various instances, the firing member **140** can be advanced from a proximal position (FIG. **44**) toward a distal end of the end effector **100** to simultaneously deploy the staples and transect the tissue. There are some circumstances, however, where it may not be desirable to advance the firing member **140** toward the distal end of the end effector **100**. For instance, the fastener cartridge **110** of the end effector **100** can be removable and/or replaceable and, in the event that a fastener cartridge **110** is not positioned within the end effector **100**, it may not be desirable for the firing member **140** to be advanced within the end effector **100**. In the event that the firing member **140** were to be advanced through the end effector **100** without a fastener cartridge positioned within the end effector **100**, a knife edge **142** of the firing member **140** may incise tissue captured within the end effector **100** without simultaneously fastening the tissue. Similarly, in the event that the fastener cartridge positioned within the end effector **100** has been previously used, or expended, and at least some of the fasteners have been deployed from the fastener cartridge, it may not be desirable for the firing member **140** to be advanced within the end effector **100**. In the event that the firing member **140** were to be advanced through the end effector **100** with a previously expended fastener cartridge positioned within the end effector **100**, the knife edge **142** of the firing member **140** may incise tissue captured within the end effector without simultaneously fastening the tissue. In various embodiments, the end effector **100** can include one or more lockout systems which can prevent the firing member **140** from being advanced distally when a fastener cartridge is not present within the end effector **100** and/or when the fastener cartridge positioned within the end effector **100** has been at least partially expended. Various lockout systems are disclosed in U.S. Pat. No. 6,988,649, entitled SURGICAL STAPLING INSTRUMENT HAVING A SPENT CARTRIDGE LOCKOUT, and issued on Jan. 24, 2006. The entire disclosure of U.S. Pat. No. 6,988,649, entitled SURGICAL STAPLING INSTRUMENT HAVING A SPENT CARTRIDGE LOCKOUT, is incorporated by reference herein.

Referring again to FIGS. **44-46**, the fastener cartridge **110** can include a cartridge body and a tissue thickness compensator **120** wherein, further to the above, the tissue thickness compensator **120** can be implanted against tissue captured by the end effector **100** by fasteners removably stored within the cartridge body. The tissue thickness compensator **120** can be positioned above a top surface, or deck, of the cartridge body wherein staples **180** removably stored within staple cavities defined in the cartridge body can be ejected from the staple cavities by a firing member, such as sled **130** and/or firing member **140**, for example. In certain embodiments, the fastener cartridge **110** can further include drivers configured to support the staples **180** and transmit the movement of the sled **130** to the staples **180** in order to move the staples **180** between an unfired position and a fired position. In various instances, the staples **180** can be at least partially embedded in the tissue thickness compensator **120** when the staples **180** are in their unfired positions and, in certain instances, the staples **180** can hold the tissue thickness compensator **120** in position over the cartridge deck when the staples **180** are in their unfired position. In the

event that the tissue thickness compensator **120** were to be moved relative to the cartridge body and/or the staples **180** prior to deploying the staples **180** into tissue, in some instances, the tissue thickness compensator **120** may move the staples **180** relative to or away from their preferred positions. Moreover, in the event that the tissue thickness compensator **120** were to be removed from the cartridge **110** prior to the staples **180** being deployed, the cartridge **110** may no longer be suitable for its originally intended use. In view of the foregoing, as discussed in greater detail below, the end effector **100** may include a lockout configured to prevent the firing member **140** and/or the sled **130** from being advanced distally to deploy the staples **180** in the event that the tissue thickness compensator **120** is removed from, or becomes at least partially dislodged from, the cartridge body prior to the staples **180** being deployed.

Referring again to FIGS. **44-46**, the tissue thickness compensator **120** can comprise, one, a body **121** configured to be captured by the staples **180** and, two, a lockout pin **122** extending from the body **121**. In various instances, the lockout pin **122** can include a first end **123** embedded in the body **121** and a second end **124** positioned intermediate the firing member **140** and the sled **130** when the tissue thickness compensator **120** has not been removed from or substantially moved from a suitable position over the cartridge body deck. In such a position, the second end **124** of the lockout pin **122** can be positioned intermediate a shoulder, or shelf, **134** defined on the sled **130** and a protrusion **144** extending distally from the firing bar **140**. Stated another way, when the lockout pin **122** is positioned intermediate the sled **130** and the firing bar **140**, the lockout pin **122** and the sled **130** can co-operate to support the firing bar **140** in an unlocked position above a lockout shoulder **112** defined in the fastener cartridge **110** such that, when a distal firing force is applied to the firing bar **140**, the firing bar **140** can advance the sled **130** distally to fire the staples **180**. When the tissue thickness compensator **120** is removed from the cartridge **110** and/or sufficiently dislodged from a desirable position relative to the cartridge body, referring primarily to FIG. **45**, the lockout pin **122** may no longer be positioned intermediate the sled **130** and the firing member **140** and/or may otherwise be unable to support the firing member **140** in its unlocked position (FIG. **44**). In such circumstances, the firing member **140** may become positioned in a locked position such that the distal advancement of the firing member **140** is prevented by the lockout shoulder **112**. In at least one such circumstance, the end effector **100** can further include a biasing member, such as a spring, for example, configured to bias the firing member **140** into its locked condition. In certain circumstances, the biasing member can bias the firing member **140** into contact with the sled **130**, for instance, without the lockout pin **122** positioned therebetween which can comprise the locked position of the firing member **140**.

As a result of the above, the cartridge **110** may become inoperable if the tissue thickness compensator **120** is prematurely removed from the cartridge **110**. In such circumstances, the lockout pin **122** may comprise a fuse which deactivates the cartridge **110** in the event that the tissue thickness compensator **120** is removed before the firing member **140** is advanced distally. In various circumstances, the lockout pin **122** may comprise a key which maintains the cartridge **110** in an unlocked condition when the key is positioned between the sled **130** and the firing member **140** and permits the cartridge **110** to enter into a locked condition in the event that the tissue thickness compensator **120** is removed from the cartridge **110** before the firing member **140** is advanced distally, i.e., before the firing member **140** begins its firing stroke. When the firing member **140** is in its locked-out condition and cannot be advanced distally, the knife edge **142** of the firing member **140** is unable to incise the tissue captured within the end effector **100**. Moreover, in such circumstances, the firing member **140** cannot advance the sled **130** distally to fire the staples **180**. Thus, the tissue thickness compensator lockout can prevent the tissue captured within the end effector **100** from being incised and stapled when the tissue thickness compensator **120** is not positioned on, or properly positioned on, the cartridge **110**. In the event that the firing member **140** is advanced distally before the tissue thickness compensator **120** is removed, or dislodged, the firing member **140** can complete the firing stroke, or at least a portion of the firing stroke, of the end effector **100**. In such instances, the sled **130** is advanced distally so that one or more ramps **132** defined on the sled **130** can lift the staples **180** and that a knife edge **142** of the firing member **140** can incise the tissue thickness compensator **120** and/or the tissue captured within the end effector **100**. In some circumstances, the firing member **140** can contact the lockout pin **122** and displace it out of the way as the firing member **140** is advanced distally. In such circumstances, the lockout pin **122** can be flexible. In various instances, the lockout pin **122** can be comprised of a bioabsorbable material and/or a biocompatible material, for example. In certain circumstances, the firing member **140** can incise the lockout pin **122** as the firing member **140** is advanced distally. In any event, the purpose of the lockout pin **122** may become obsolete once the firing member **140** has been at least partially advanced. Stated another way, the tissue thickness compensator lockout can serve as an initial check to verify that a tissue thickness compensator is present within the end effector and, once that initial check has been made, the firing stroke of the end effector can proceed.

Referring again to FIGS. **47-50**, an end effector **200** can comprise an anvil **260** and, in addition, a fastener cartridge **210** including a cartridge body **214** and a tissue thickness compensator **220** wherein, further to the above, the tissue thickness compensator **220** can be implanted against tissue captured by the end effector **200** by fasteners removably stored within the cartridge body **214**. The tissue thickness compensator **220** can be positioned above a top surface, or deck, **211** of the cartridge body **214** wherein staples removably stored within staple cavities defined in the cartridge body **214** can be ejected from the staple cavities by a firing member, such as a sled **230** and/or a firing member **240**, for example. In certain embodiments, the fastener cartridge **210** can further include drivers configured to support the staples and transmit the movement of the sled **230** to the staples in order to move the staples between an unfired position and a fired position. In various instances, the staples can be at least partially embedded in the tissue thickness compensator **220** when the staples are in their unfired positions and, in certain instances, the staples can hold the tissue thickness compensator **220** in position when the staples are in their unfired position. In the event that the tissue thickness compensator **220** were to be moved relative to the cartridge body **214** and/or the staples prior to deploying the staples into the tissue, in some instances, the tissue thickness compensator **220** may move the staples relative to or away from their preferred positions. Moreover, in the event that the tissue thickness compensator **220** were to be removed from the cartridge **210** prior to the staples being deployed, the cartridge **210** may no longer be suitable for its originally intended use. In view of the foregoing, as discussed in greater detail below, the end effector **200** may include a

lockout configured to prevent the firing member **240** and/or the sled **230** from being advanced distally to deploy the staples in the event that the tissue thickness compensator **220** is removed from, or becomes at least partially dislodged from, the cartridge body **214** prior to the staples being deployed.

Referring again to FIGS. **44-46**, the tissue thickness compensator **220** can comprise, one, a body **221** configured to be captured by the staples and, two, a loop, or tether, **222** extending from the body **221**. In various instances, referring primarily to FIG. **47**, the loop **222** can comprise ends which are at least partially embedded in the body **221** and an intermediate portion extending between the ends which can be releasably engaged with the sled **230**. In certain instances, the loop **222** can comprise a suture or flexible thread, for example. In some instances, the loop **222** can be comprised of a bioabsorbable material and/or a biocompatible material, for example. Referring primarily to FIG. **48**, the sled **230** can include a longitudinal body portion **236**, a hook **238** extending from the body portion **236**, and a slot **237** defined between the body portion **236** and the hook **238**. As illustrated in FIG. **48**, the loop **222** is positioned within the slot **237** when the tissue thickness compensator **220** is positioned over the cartridge deck **211** and the sled **230** and the firing member **240** are in an unfired position. As also illustrated in FIG. **48**, a distal projection **244** extending from the firing member **240** is positioned against and/or above a support shoulder **234** defined on the sled **230** which holds the firing member **240** in an unlocked position, i.e., in a position in which the distal movement of the firing member **240** will not be impeded, or at least substantially impeded, by a lockout shoulder **212** defined in the end effector **200** when a firing motion is applied to the firing member **240**. Thus, when the sled **230** holds the firing member **240** in its unlocked position, referring to FIG. **49**, the firing member **240** will slide past the lockout shoulder **212** to advance the sled **230** distally, fire the staples removably stored within the cartridge body **214**, and incise the tissue thickness compensator and the tissue positioned within the end effector **200** with a knife edge **242**. As illustrated in FIG. **49**, the loop **222** can slide out of the slot **237** defined in the sled **230** when the sled **230** is advanced distally.

In the event that the tissue thickness compensator **220** is removed from the cartridge **210** or substantially moved from a suitable position over the deck **211** of the cartridge **210**, referring now to FIG. **50**, the tissue thickness compensator **220** can pull the sled **230** distally such that the firing member **240** is no longer supported by the sled **230**. More particularly, the loop **222** of the tissue thickness compensator **220** positioned within the slot **237** can pull the sled **230** distally from its unfired position such that the support shoulder **234** is no longer positioned under the distal projection **244** of the firing member **240**. In such circumstances, the firing member **240** may shift downwardly into a locked position wherein the distal movement of the firing member **240** can be impeded by the lockout shoulder **212**. In certain circumstances, the end effector **200** can further include a biasing member, such as a spring, for example, which can bias the firing member **240** into its locked condition. When the firing member **240** is in its locked condition, the firing member **240** cannot be moved distally to advance the sled **230**, fire the staples from the cartridge body **210**, and/or incise the tissue captured within the end effector **200**. Although the sled **230** may be advanced distally when the tissue thickness compensator **220** is removed from the cartridge **210**, the sled **230**, in various circumstances, may not be advanced sufficiently to deploy the staples from the cartridge **210**. When the user of the surgical instrument recognizes that the firing member **240** is in a locked-out condition, the user can remove the staple cartridge **210** from the end effector **200** and replace it with a staple cartridge **210**, for example, in which the tissue thickness compensator **220** is correctly positioned over the deck **211** and the sled **230** has not been advanced distally from its unfired position. Other embodiments are contemplated in which a staple cartridge is not removable from the end effector; in such embodiments, the end effector may be entirely replaced in the event that the tissue thickness compensator is removed from the staple cartridge and/or the firing member enters into a locked-out condition.

Turning now to FIGS. **51-53**, a staple cartridge **310** can include a cartridge body **314** and a sled **330** movably positioned within the cartridge body **314**. Similar to the above, the cartridge body **314** can include a plurality of fastener cavities, such as fastener cavities **316**, for example, and a longitudinal slot, such as knife slot **318**, for example, defined therein. The sled **330** can include a central body portion **336** slidably positioned within the knife slot **318** and a hook **338** extending from the central body portion **336**. Referring primarily to FIG. **51**, a tissue thickness compensator **320** of the cartridge **310** can include a body portion **321** and a catch **322** extending from the body portion **321** wherein the catch **322** can be releasably retained in a slot **337** defined between the hook **338** and the central body portion **336** when the sled **330** is in its unfired, or unadvanced, position. Similar to the above, the catch **322** can include ends **323** mounted within the body **321** and can extend proximally from the body **321** of the tissue thickness compensator **320** wherein, in the event that the tissue thickness compensator **320** is removed from the cartridge body **314**, for instance, the catch **322** can pull the sled **330** distally such that a support shoulder **334** defined in the central body portion **336** is no longer able to support a firing member, such as firing member **240**, for example, thereon and such that the firing member may enter a locked out state. In various instances, a user of the surgical instrument may attempt to reassemble or reposition the tissue thickness compensator **320** over the deck **311** of the cartridge body **314**; however, the firing member **340** will still remain in a locked out condition as the repositioning of the tissue thickness compensator **320** will not reset the sled **330**. Thus, such an arrangement can prevent the cartridge **310** from being used if it has been previously tampered with.

In various instances, referring again to FIGS. **51-53**, at least a portion of the hook **338** extending from the central portion **336** of the sled **330** and/or the slot **337** defined therebetween can extend above the deck **311**. In certain instances, at least a portion of the hook **338** extending from the central portion **336** of the sled **330** and/or the slot **337** defined therebetween can extend above the knife slot **318**. In such embodiments, the catch **322** can be easily slid into the slot **337** when the tissue thickness compensator **320** is assembled to the cartridge body **314**. In certain instances, the catch **322** can be positioned above or against the deck surface **311** of the cartridge body **314**. In various instances, referring primarily to FIG. **53**, the cartridge body **314** can include a recess or pocket **319** defined therein within which the hook **338** can be positioned when the sled **330** is in its unfired, or unadvanced, position. In such an embodiment, the top of the hook **338** may be positioned below the deck surface **311**. In various instances, the pocket **319** can further include one or more ramped surfaces **313** which are defined in the distal end of the pocket **319** and extend downwardly from the deck surface **311**. In some instances, the catch **322**

can abut the ramped surfaces **313** when the sled **330** is advanced distally and, in such circumstances, the hook **338** can then separate from the catch **322**. In various instances, the recess **319** can be configured to facilitate the assembly of the catch **322** to the sled **330** when the tissue thickness compensator **320** is assembled to the cartridge body **314**. In various embodiments, the slot **337** can extend longitudinally and can include a closed distal end an open proximal end wherein the catch **322** can be slid into the slot **337** from the open proximal end. In the event that the tissue thickness compensator **320** is not prematurely removed or dislodged from the cartridge **314**, the sled **330** can be advanced distally such that the catch **322** exits the slot **337** through the distal end thereof and such that ramps **332** defined on the sled **330** can eject the staples from the staple cartridge **310**.

In various instances, a tissue thickness compensator can be adhered to a sled utilizing at least one adhesive. In such instances, the adhesive attachment between the tissue thickness compensator and the sled can be strong enough to permit the tissue thickness compensator to pull the sled distally in the event that the tissue thickness compensator is removed from the cartridge. When the sled is advanced distally by the firing member as part of the firing stroke, the adhesive attachment between the tissue thickness compensator and the sled may fail thereby permitting the sled to slide distally relative to the tissue thickness compensator. In various instances, a tissue thickness compensator can be bonded to a sled utilizing a heat steak process and/or a thermoform process. In such instances, the bond between the tissue thickness compensator and the sled can be strong enough to permit the tissue thickness compensator to pull the sled distally in the event that the tissue thickness compensator is removed from the cartridge. When the sled is advanced distally by the firing member as part of the firing stroke, the bond between the tissue thickness compensator and the sled may fail thereby permitting the sled to slide distally relative to the tissue thickness compensator.

In some instances, a loop, a catch, and/or tag, for example, can be integrally formed with a tissue thickness compensator. In various instances, the loop, catch, and/or tag, for example, can comprise a unitary piece of material with the tissue thickness compensator. In some instances, an additional layer can be attached to the tissue thickness compensator. This layer, in various instances, can comprise a mounting portion engaged with the sled.

Turning now to FIG. **54**, a sled **430** can include, similar to the above, a central body portion **436** and, in addition, a plurality of ramps **432** which are configured to eject staples removably stored within a cartridge body, for example. Also similar to the above, the body portion **436** can include a hook **438** extending therefrom wherein a slot **437** can be defined between the body portion **436** and the hook **438**. In certain instances, the slot **437** can include a closed distal end **437***a* and an open proximal end **437***d*. In various instances, the slot **437** can further include a first portion **437***b* extending in a first direction and a second portion **437***c* extending in a second direction. In certain instances, the first portion **437***b* can extend along a longitudinal axis and the second portion **437***c* can extend along a second axis which is transverse to the longitudinal axis. In at least one such instance, the second portion **437***c* can extend at an angle relative to the first portion **437***b*.

Turning now to FIGS. **55-58**, a sled assembly **530** can include a first portion **535** and, in addition, a second portion **536** which is movable relative to the first portion **535** between an unlocked position (FIGS. **55** and **57**) and a locked position (FIGS. **56** and **58**). The first portion **535** can include, one, a central portion configured to slide within a longitudinal slot, such as a knife slot **518** defined in a staple cartridge **510**, for instance, and, two, a plurality of ramps **532** configured to eject staples removably stored within the cartridge **510**. The central portion of the first portion **535** can include a first slot **533***a* and a second slot **533***b* defined therein. The first slot **533***a* and the second slot **533***b* can be configured to receive pins **531***a* and **531***b*, respectively, extending from the second portion **536**. The first pin **531***a* can be configured to slide within the first slot **533***a* and the second pin **531***b* can be configured to slide within the second slot **533***b* in order to permit the second portion **536** to rotate relative to the first portion **535**. In various instances, the first pin **531***a* can be closely received within the first slot **533***a* such that the first slot **533***a* can constrain the motion of the first pin **531***a* along a first path and, similarly, the second pin **531***b* can be closely received within the second slot **533***b* such that the second slot **533***b* can constrain the motion of the second pin **531***b* along a second path. Referring primarily to FIG. **57**, the second portion **536** of the sled assembly **530** can comprise an arm configured to slide within the knife slot **518** wherein the arm can include a support shoulder **534** defined on the proximal end thereof and a hook **538** defined on the distal end thereof. Similar to the above, the support shoulder **534** can be configured to support a firing member **240**, for example, in an unlocked position when the sled assembly **530** is in a proximal, unfired position and the tissue thickness compensator **220**, for instance, is positioned over and/or against the deck surface **511** of the cartridge **510**. Also similar to the above, the hook **538** can be configured to releasably hold the loop **222** of the tissue thickness compensator **220** such that, in the event that the tissue thickness compensator **220** were to be removed from and/or substantially displaced relative to the cartridge body, the loop **222** could pull on the second portion **536** to pivot the second portion **536** into its locked position as illustrated in FIG. **58**. In such a locked position of the second portion **536**, the support shoulder **534** may no longer support the distal projection **244** of the firing member **240** and the firing member **240** can drop downwardly into its locked position. As depicted in FIG. **58**, the rotation of the second portion **536** into its locked position can move the support shoulder **534** distally and/or downwardly away from the firing member **240**. As also depicted in FIG. **58**, the firing member **240** can include a lock **541** extending from opposite sides thereof which can be configured to abut the lockout shoulder **212** when the firing member **240** is in its locked position. When the firing member **240** is held in its unlocked position by the sled assembly **530**, the locks **541** may not contact the lockout shoulder **212** and the firing member **240** can be advanced through the cartridge **510**.

In various instances, as discussed above, a portion of a staple-driving sled may extend above the deck surface of a cartridge body. For instance, referring again to FIGS. **52** and **54**, the hook **338** of the sled **330** (FIG. **52**) and/or the hook **438** of the sled **430**, for example, can extend above the deck surface. In such instances, the hook **338** and/or the hook **438** can translate distally above the deck surface and, in some instances, contact the tissue thickness compensator positioned against or above the deck surface. In certain instances, the hook **338** and/or the hook **438** can lift the tissue thickness compensator upwardly away from the cartridge body and facilitate the progressive release of the tissue thickness compensator from the cartridge. For instance, the hook **338** and/or the hook **438** can begin at the proximal end of the tissue thickness compensator and move toward the distal end of the tissue thickness compensator in

order to initially lift the proximal end of the tissue thickness compensator and then progressively lift it away from the cartridge deck until the distal end of the tissue thickness compensator is eventually lifted away from the cartridge body. In other instances, as discussed in greater detail further below. it may be preferable for the portion of the sled contacting the tissue thickness compensator to deflect downwardly and/or otherwise not disturb the tissue thickness compensator as the sled is advanced distally.

Turning now to FIGS. **59** and **60**, a staple cartridge **610** can include a cartridge body **614**, a tissue thickness compensator **620** releasably retained to the cartridge body **614**, and a sled **630** configured to longitudinally traverse the cartridge body **614** and eject staples removably stored therein. The sled **630** can include a main body portion **635** having a plurality of ramp surfaces defined thereon, a support shoulder **634**, and an arm **636** extending from the body portion **635**. In various instances, the arm **636** can be assembled to the main body portion **635**. For instance, the arm **636** can include a first end embedded in the main body portion **635** and a second end including a hook **638**, for example. In various instances, the arm **636** can comprise a cantilever beam extending from the main body portion **635**. In certain instances, the arm **636** can be comprised of a resilient and/or flexible material, for example. Similar to the above, a slot **637** can be defined between the hook **638** and the arm **636** which can be configured to releasably hold a portion of the tissue thickness compensator **620** when the sled **630** is in its proximal, unfired position. In the event that the tissue thickness compensator **620** is pulled off of the cartridge body **614**, for example, the tissue thickness compensator **620** can pull the sled **630** distally away from a firing member so that the firing member enters into a locked out condition.

In various instances, further to the above, at least a portion of the arm **636**, such as the hook **638**, for example, can extend above the deck surface **611** of the cartridge body **614**. In certain instances, the arm **636** can be engaged with a loop, for example, extending from the tissue thickness compensator **620** when the sled **630** is in its proximal position (FIG. **59**) and, as the sled **630** is advanced distally, the arm **636** can disengage from the loop. As the sled **630** is advanced distally, in certain instances, the arm **636** can contact the body portion **621** of the tissue thickness compensator **620** and flex downwardly. In various instances, the deflected arm **636** can slide within a longitudinal knife slot **618** defined in the cartridge body **614** as the sled **630** is advanced distally. In some instances, referring to FIG. **60**, the distal end of the longitudinal slot **618** can be defined by a nose wall, or roof, **619** wherein, when the sled **630** reaches a distal end **617** of the cartridge **610**, the arm **636** can slide under the nose wall **619** such that the firing stroke of the end effector can be completed. In some instances, the arm **636** may not be deflected, or substantially deflected, downwardly by the tissue thickness compensator **620** wherein, when the arm **636** reaches the end of the longitudinal slot **618**, the arm **636** can contact the nose wall **618** and flex downwardly in order to slide thereunder as illustrated in FIG. **60**. In various circumstances, as a result, the flexible arm **636** can permit the firing stroke to be completed and for the sled **630** to be parked at the distal end of the cartridge.

Turning now to FIG. **61**, a sled, such as sled assembly **730**, for example, can include a main body portion **735** and a movable arm **736**. Similar to the above, the main body portion **735** can include one or more staple-driving ramps **732** and a support shoulder **734** configured to support a firing member in an unlocked position, as described above. The arm **736** can include a first end pivotably and/or rotatably mounted to the main body portion **735** and a second end including a hook **738** configured to be releasably engaged with a tissue thickness compensator, as described above. When the sled assembly **730** is advanced distally, the hook **738** can detach from the tissue thickness compensator; however, the upper surface of the hook **738** can remain in contact with the bottom surface of the tissue thickness compensator. In such circumstances, the arm **736** can pivot downwardly into the knife slot **318**, for example, in order to slide under the tissue thickness compensator. More particularly, the arm **736** can pivot from a raised, or uppermost, position (FIG. **61**) to a lowered, or depressed, position. In various instances, the sled assembly **730** can further include a resilient biasing member, such as a spring **731**, for example, configured to bias the arm **736** into its raised position. When the arm **736** has been rotated downwardly into its lowered position, the spring **731** can apply a biasing force to the arm **736** which is transmitted into the tissue thickness compensator. In certain instances, the spring **731** can be positioned intermediate the arm **736** and a frame portion **733** defined on the main body portion **735**. In various instances, the spring **731** can comprise a cantilever spring or leaf spring, for example, extending from the arm **736**. When the arm **736** is pushed downwardly, the cantilever spring can be configured to flex and/or slide along the frame portion **731**, for instance. In various embodiments, the main body portion **735** can further include a stop shoulder **739**, for example, which can limit the upward rotation, or travel, of the arm **736**. In any event, similar to the above, the arm **736** can be configured to rotate downwardly when it contacts the roof **619** and permit the firing stroke to be completed.

In various instances, a staple can comprise a base and one or more legs extending from the base. In certain instances, a staple can comprise a base including a first end and a second end, a first leg extending from the first end, and a second leg extending from the second end. In some instances, the staple can be formed from a continuous wire which comprises the first leg, the base, and the second leg. A first end of the continuous wire can comprise a tip of the first staple leg and a second end of the continuous wire can comprise a tip of the second staple leg. One such staple, i.e., staple **800**, is depicted in FIG. **62**, for example. The staple **800** can include a base **802**, a first staple leg **804** extending from a first end of the base **802**, and a second staple leg **804** extending from a second end of the base **802**. The first staple leg **804** can include a first tip **806** and, similarly, the second staple leg **804** can include a second tip **806**. In various instances, the tips **806** can be configured to penetrate tissue, such as tissue T depicted in FIG. **62**, for example. In some instances, the tips **806** can be sharp and can be formed by a coining process, for example. In various embodiments, the wire can be comprised of titanium and/or stainless steel, for example.

In various embodiments, the staple **800** can be U-shaped, or at least substantially U-shaped, for example, when it is in its unformed configuration. In such embodiments, the legs **804** of the staple **800** can be parallel, or at least substantially parallel, to one another. Moreover, in such embodiments, the legs **804** can be perpendicular, or at least substantially perpendicular, to the base **802**. In certain embodiments, the staple **800** can be V-shaped, or at least substantially V-shaped, for example, when it is in its unformed configuration. In such embodiments, the legs **804** of the staple **800** are not parallel to one another; rather, the legs **804** can extend in non-parallel directions. Moreover, in such embodiments, one or both of the legs **804** are not perpendicular to

the base **802** wherein one or both of the legs **804** can extend in directions which are oblique to the base **802**. In various instances, the legs **804** may extend, or splay, outwardly with respect to a center or midline of the staple. In any event, the staple **800** can be removably stored within a staple cartridge, ejected from the staple cartridge to penetrate tissue, as illustrated in FIG. **62**, and then contact an anvil positioned on the opposite side of the tissue. The anvil can be configured to deform the staple **800** into any suitable shape, such as a B-form configuration, for example, as also illustrated in FIG. **62**. Various formed staple configurations, such as the B-form configuration, for example, can define a tissue entrapment area, such as tissue entrapment area **807**, for example, configured to entrap tissue within the staple.

As discussed above, a staple can be removably stored within a cavity defined in a cartridge body. A cartridge body **810** is depicted in FIG. **63** which can include one or more staple cavities **812** defined therein. Referring to FIGS. **63**, **68**, and **69**, each staple cavity **812** can include a first end **814** and a second end **814**. In certain embodiments, such as embodiments including a longitudinal end effector, for example, the first end **814** can comprise a proximal end of the staple cavity **812** and the second end **814** can comprise a distal end of the staple cavity **812**. In various instances, a staple can be positioned within a staple cavity **812** such that a first leg **804** of the staple **800** is positioned in the first end **814** of the staple cavity **812** and a second leg **804** is positioned in the second end **814**. In various instances, a staple cavity width can be defined between the ends **814** of a staple cavity **812**. The base **802** of a staple can be defined by a base width which can be equal to or shorter than the staple cavity width, for example. In certain instances, a staple can comprise a staple width which can be defined between the tips **806** of the staple legs **804**. In some embodiments, the staple width can be equal to the staple cavity width. In various embodiments, the staple width can be wider than the staple cavity width. In such embodiments, the legs **804** can be in contact with the ends **814** of a staple cavity **812** and can be resiliently biased inwardly by the ends **814** when the staple is positioned within the staple cavity **812**. When the staple is lifted upwardly out of the staple cavity **812**, the legs **804** can resiliently splay outwardly as they emerge from the staple cavity **812**. For example, the staple can be positioned within the staple cavity **812** such that the tips **806** of the staple legs **804** do not extend above a top surface, or deck, of the cartridge body **810** when the staple is in its unfired, or uplifted, position. In such a position, the tips **806** can be positioned flush with or recessed below the deck **811** of the cartridge body **810**. Alternatively, the tips **806** of the legs **804** can at least partially extend above the deck **811** of the cartridge body **810**. In any event, as the staple is lifted upwardly, the staple tips **806** can emerge above the deck **811** and splay outwardly as the legs **804** emerge from the cavity **812**. At some point during the lifting of the staple, the legs **804** may no longer be in contact with the ends **814** of the staple cavity **812** and the legs **804** may no longer be biased inwardly by the sidewalls of the staple cavity **812**.

In various instances, an anvil can include one or more pockets configured to receive the tips **806** of the staple legs **804** as the staple **800** is ejected from the staple cartridge. The anvil pockets can be configured to turn, or bend, the staple legs **804** inwardly toward one another, for example. In other instances, the anvil pockets can be configured to turn, or bend, the staple legs **804** outwardly away from one another, for example. In some instances, however, one or more of the staple legs of a staple may miss a staple pocket and may not be properly deformed. In certain instances, one or more of the staple legs may not contact the anvil and may not be deformed at all. In either event, the staple may not properly capture and/or retain the tissue within its tissue entrapment area. Moreover, the misformed or unformed staple may not be able to apply a desired compressive pressure to the tissue. In some instances, the misformed or unformed staple may not be retained in the tissue and can become dislodged from the tissue.

Referring again to FIG. **62**, the staple **800**, and/or various other staples disclosed herein, can include one or more barbs extending therefrom. In various instances, the barbs can be configured to engage tissue captured within and/or surrounding the staple. In certain instances, the barbs can assist in retaining the staple within the tissue, especially when the staple has been misformed or unformed. The staple **800** can include barbs extending from one or both of the legs **804**. For instance, each leg **804** can include one or more barbs **808** which face outwardly from the center of the staple **800** and/or one or more barbs **809** which face inwardly toward the center of the staple **800**, for example. In certain instances, the barbs **808** can extend away from the tissue entrapment area **807** and/or the barbs **809** can extend toward or into the tissue entrapment area **807**. As depicted in FIG. **62**, both of the staple legs **804** of staple **800** can include barbs **808** and barbs **809**. In some instances, the staple legs **804** can include barbs **808**, but not barbs **809**. A staple **820** is depicted in FIG. **63** which includes barbs **808**, but not barbs **809**. In some instances, the staple legs **804** can include barbs **809**, but not barbs **808**. Staples **830**, **840**, **850**, **860**, and **870** are depicted in FIGS. **64**, **65**, **66**, **67**, and **68**, respectively, which include barbs **809**, but not barbs **808**. In some embodiments, a first leg **804** of a staple can include barbs **808** while a second leg **804** of the staple can include barbs **809**, for example.

In various instances, the legs **804** and the base **802** of a staple can define a staple plane when the staple is in an unformed configuration. The barbs **808** can extend outwardly from the legs **804** within such a staple plane. Similarly, the barbs **809** can extend inwardly from the legs **804** within such a plane. In some instances, a staple can include barbs which extend laterally with respect to such a staple plane. Other embodiments are envisioned in which the legs **804** and the base **802** do not lie within, or entirely lie within, a single plane. In such embodiments, the barbs can extend in any suitable direction. In various embodiments, referring now to FIG. **67**, a staple, such as staple **860**, for example, can include barbs **803** extending from the base **802**. In various instances, the barbs **803** can extend inwardly toward the tissue entrapment area **807** of the staple **860**. In certain instances, the barbs **803** can extend outwardly away from the tissue entrapment area **807**. As illustrated in FIG. **67**, the barbs **803** can extend within a staple plane defined by the legs **804** and the base **802**. In certain instances, the barbs **803** can extend laterally with respect to such a staple plane. Various exemplary barb configurations are discussed in greater detail further below.

In various instances, a staple leg **804** can comprise an array of barbs **808** which extends along the entire length thereof. In some instances, a staple leg **804** can comprise an array of barbs **808** which extends along less than the entire length thereof. By way of example, referring to FIG. **62**, the legs **804** of the staple **800** each comprise an array of barbs **808** which extends along less than the entire length of the legs **804**. Similarly, referring to FIG. **63**, the legs **804** of the staple **820** each comprise an array of barbs **808** which extends along less than the entire length of the legs **804**.

With regard to the staple **800**, for example, an array of barbs **808** can extend along each of the legs **804** from the base **802** of the staple **800** toward the tips **806** of the legs **804**. As illustrated in FIG. **62**, the arrays of barbs **808** may not extend to the tips **806** of the legs **804**. In various instances, the arrays of barbs **808** can extend along half, or approximately half, the lengths of the legs **804**, for example; however, any suitable length of the barb arrays could be utilized. For instance, the arrays of barbs **808** can extend along less than half or more than half of the lengths of the legs **804**. In some embodiments, an array of barbs **808** can extend along each of the legs **804** from the tips **806** of the legs **804** toward the base **802**. In such embodiments, the array of barbs **808** may not extend to the base **802**. In some embodiments, a leg **804** can comprise an array of barbs **808** which does not extend to the tip **806** of the leg **804** or the base **802**. In certain embodiments, a leg **804** can comprise more than one array of barbs **808**.

In various instances, further to the above, a staple leg **804** can comprise an array of barbs **809** which extends along the entire length thereof. By way of example, referring to FIG. **64**, the legs **804** of the staple **830** each comprise an array of barbs **809** which extends along the entire length of the legs **804**. In some instances, a staple leg **804** can comprise an array of barbs **809** which extends along less than the entire length thereof. By way of example, referring to FIG. **65**, the legs **804** of the staple **840** each comprise an array of barbs **809** which extends along less than the entire length of the legs **804**. Similarly, referring to FIG. **68**, the legs **804** of the staple **870** each comprise an array of barbs **809** which extends along less than the entire length of the legs **804**. With regard to the staple **840**, for example, an array of barbs **809** can extend along each of the legs **804** from the base **802** of the staple **840** toward the tips **806** of the legs **804**. As illustrated in FIG. **65**, the arrays of barbs **809** may not extend to the tips **806** of the legs **804**. In various instances, the arrays of barbs **809** can extend along half, or approximately half, the lengths of the legs **804**, for example; however, any suitable length of the barb arrays could be utilized. For instance, the arrays of barbs **809** can extend along less than half or more than half of the lengths of the legs **804**. In some embodiments, an array of barbs **809** can extend along each of the legs **804** from the tips **806** of the legs **804** toward the base **802**. In such embodiments, the array of barbs **809** may not extend to the base **802**. In some embodiments, as illustrated in FIG. **66**, a leg **804** can comprise an array of barbs **809** which does not extend to the tip **806** of the leg **804** or the base **802**. In certain embodiments, a leg **804** can comprise more than one array of barbs **809**.

Various barb configurations are depicted in FIGS. **70-73**, although any suitable barb configuration could be utilized. Referring to FIG. **70**, a staple leg **804** can include at least one barb **809**, for example. In various instances, the barb **809** can comprise a prong. The prong can include a first surface **809***a* and a second surface **809***b* which can extend from the perimeter **805** of the staple leg **804**. The first surface **809***a* can comprise an inclined surface, a convex surface, and/or a concave surface, for example. The second surface **809***b* can comprise a flat, or an at least substantially flat, surface, for example. In various instances, the first surface **809***a* and the second surface **809***b* can converge at an edge **809***c*, for example. The barb **809** can be formed utilizing any suitable process. For instance, the barb **809** can be formed utilizing a stamping process. In at least one embodiment, a forming die, for example, can be utilized to strike the perimeter **805** of the wire comprising the leg **804** in order to upset, or disturb, enough material to create the barb **809**. In various instances, a barb can comprise any suitable nib or spur, for example. In various embodiments, the barb **809** can be tapered. In various instances, the barb **809** can include a base adjacent to the perimeter **805** which is thicker than a tip of the barb **809**.

Referring now to FIGS. **68**, **69**, **71**, and **71**A, a staple leg **804** can include at least one barb **879**, for example. In at least one embodiment, the barb **879** can extend around a portion of the perimeter **805** of the staple leg **804**. In various instances, the barb **879** can include a first surface **879***a* and a second surface **879***b* which can extend from the perimeter **805** of the staple leg **804**. The first surface **879***a* can comprise an inclined surface, a convex surface, and/or a concave surface, for example. The second surface **879***b* can comprise a flat, or an at least substantially flat, surface, for example. In various instances, the first surface **879***a* and the second surface **879***b* can converge at an edge **879***c*, for example. In various instances, the edge **879***c* can be arcuate, for example. The barb **879** can be formed utilizing any suitable process. For instance, the barb **879** can be formed utilizing a stamping process. In at least one embodiment, a forming die, for example, can be utilized to strike the perimeter **805** of the wire comprising the leg **804** in order to upset, or disturb, enough material to create the barb **879**. Referring primarily to FIG. **71**A, the wire comprising the leg **804** can be defined by a diameter **801** and the barb **879** can be defined by a diameter which is larger than the diameter **801**. Correspondingly, the wire comprising the leg **804** can be defined by a radius and the barb **879** can be defined by a radius which is larger than the wire radius. In various embodiments, the barb **879** can be tapered. In various instances, the barb **879** can include a base adjacent to the perimeter **805** which is thicker than a tip of the barb **879**.

Referring now to FIG. **72**, a staple leg **804** can include at least one barb **889**, for example. In at least one embodiment, the barb **889** can extend around the entirety of the perimeter **805** of the staple leg **804**. In various instances, the barb **889** can include a first surface **889***a* and a second surface **889***b* which can extend from the perimeter **805** of the staple leg **804**. The first surface **889***a* can comprise an inclined surface, a convex surface, and/or a concave surface, for example. The second surface **889***b* can comprise a flat, or an at least substantially flat, surface, for example. In various instances, the first surface **889***a* and the second surface **889***b* can converge at an edge **889***c*, for example. In various instances, the edge **889***c* can be arcuate, for example. The barb **889** can be formed utilizing any suitable process. For instance, the barb **889** can be formed utilizing a stamping process. In at least one embodiment, a forming die, for example, can be utilized to strike the perimeter **805** of the wire comprising the leg **804** in order to upset, or disturb, enough material to create the barb **889**. The wire comprising the leg **804** can be defined by a wire diameter and the barb **889** can be defined by a diameter which is larger than the wire diameter. Correspondingly, the wire comprising the leg **804** can be defined by a radius and the barb **889** can be defined by a radius which is larger than the wire radius. In various embodiments, the barb **889** can be tapered. In various instances, the barb **889** can include a base adjacent to the perimeter **805** which is thicker than a tip of the barb **889**.

Referring now to FIG. **73**, a staple leg **804** can include at least one barb **899**, for example. In various instances, the barb **899** can comprise a prong. The prong can include a first surface **899***a* and a second surface **899***b* which can extend from the perimeter of the staple leg **804**. The first surface **899***a* can comprise an inclined surface, a convex surface, and/or a concave surface, for example. The second surface

899*b* can comprise a flat, or an at least substantially flat, surface, for example. In various instances, the first surface **899***a* and the second surface **899***b* can converge at an edge **899***c*, for example. The barb **899** can be formed utilizing any suitable process. For instance, the barb **899** can be formed utilizing a stamping process. In at least one embodiment, a forming die, for example, can be utilized to strike the perimeter of the wire comprising the leg **804** in order to upset, or disturb, enough material to create the barb **899**. In various embodiments, the wire comprising the staple can include one or more flat sides. In at least one embodiment, the wire can include opposing flat sides **895**, for example. In at least one such embodiment, the flat sides **895** can be formed into a cylindrical wire. In some instances, the wire can retain one or more cylindrical surfaces in addition to the flat sides **895**. In various instances, a barb can comprise any suitable nib or spur, for example. In various embodiments, the barb **899** can be tapered. In various instances, the barb **899** can include a base adjacent to the perimeter of the leg **804** which is thicker than a tip of the barb **899**.

In various instances, the legs of a staple can define a staple plane. The base of the staple may or may not be positioned within the staple plane. In either event, one or more barbs extending from the legs and/or the base may extend within and/or extend parallel with respect to the staple plane. In some instances, one or more barbs extending from the legs and/or the base can extend outwardly from the staple plane. One or more barbs extending from the legs and/or the base can extend transversely with respect to the staple plane. In various instances, a barb can extend circumferentially around a staple leg. Such a barb can extend within and outwardly from the staple plane. In some instances, a barb can extend around the entire circumference of a staple leg. In certain instances, the barb can extend less than 360 degrees around a staple leg. A barb extending within a staple plane can readily control tissue within the staple plane. A barb extending outwardly from a staple plane can readily control tissue outside of the staple plane. A staple, and/or a staple leg, can include one or more barbs extending within the staple plane and one or more barbs extending outwardly from the staple plane.

Referring again to FIG. **62**, the barbs extending from a staple leg **804** can be configured to retain the staple leg **804** within tissue. As outline above, the staple legs **804** may be malformed and/or unformed by an anvil in certain instances and, owing to the barb, or barbs, extending therefrom, the staple leg **804** may still be retained in the tissue. In various instances, the barbs can be configured to trap tissue within the tissue entrapment area of the staple. In certain instances, the barbs can be configured to hold the tissue against the base **802**. In such instances, the barbs can apply a compressive force or pressure to the tissue. As discussed above in connection with the embodiments depicted in FIGS. **70-73**, a barb can comprise an inclined, convex, and/or concave top surface, such as surfaces **809***a*, **879***a*, **889***a*, and/or **899***a*, for example. The top surfaces of the barbs can be configured to facilitate the insertion of the barbs and the staple legs **804** into and/or through the tissue. As also discussed above in connection with the embodiments depicted in FIGS. **70-73**, a barb can comprise a flat, or at least substantially flat, bottom surface, such as surfaces **809***b*, **879***b*, **889***b*, and/or **899***b*, for example. The bottom surfaces of the barbs can be configured to inhibit the removal of the barbs and the staple legs **804** from the tissue. As a result of the above, in certain circumstances, the top surfaces of the barbs can be configured to pierce the tissue while the bottom surfaces of the barbs can be configured to abut the tissue. In various circumstances, the tips **806** of the staple legs **804** can be configured to puncture a hole in the tissue while the staple legs **804** and the barbs extending therefrom can be configured to resiliently expand the hole such that such that the tissue can flow around the barbs as the staple legs **804** are being pushed through the tissue and flow back underneath the bottom surfaces of the barbs.

In certain embodiments, a first barb can extend from a first leg **804** of the staple and a second barb can extend from a second leg **804** of the staple. In various instances, the first barb and the second barb can be located the same, or at least substantially the same, distance between from the base **802**. In certain instances, the first barb and the second barb can be located the same, or at least substantially the same, vertical distance from the base **802**. As discussed above, a staple leg **804** can include an array of barbs extending along the length of the staple leg **804**. In various embodiments, referring primarily to FIG. **62**, a staple can include a first leg **804** including a first array of barbs and a second leg **804** including a second array of barbs wherein the first array of barbs and the second array of barbs can be configured to co-operatively hold the staple within the tissue. In various embodiments, a barb from the first array and a barb from the second array can comprise a pair of barbs configured to engage tissue at the same vertical distance from the base **802**, for example. In various instances, a staple can comprise more than one pair of barbs. In certain instances, each of the barb pairs can be configured to engage the tissue at a different vertical distance from the base **802**. In such circumstances, a staple can be suitable for use with different tissue thicknesses. For instance, when a staple is used to staple thin tissue, one pair of barbs, or less than all of the barb pairs, may engage the thin tissue. If that staple were used to staple thick tissue, however, additional barb pairs, or all of the barb pairs, may engage the tissue. In certain embodiments, the barbs extending from the legs **804** can be arranged in a manner in accordance with the tissue thickness, or range of tissue thicknesses, that can be stapled by the staple. For instance, referring again to FIG. **62**, the barbs **808** and **809** can be selectively positioned along the legs **804** such that they are positioned within and/or adjacent to the tissue captured within the staple. In certain instances, the portions of the staple legs **804** that are deformed by, or come into contact with, an anvil may not include barbs extending therefrom. In at least some instances, an array of barbs extending from the inwardly-facing side of the staple legs **804** may be longer than an array of barbs extending from the outwardly-facing side of the staple legs **804**. In other instances, an array of barbs extending from the inwardly-facing side of the staple legs **804** may be shorter than an array of barbs extending from the outwardly-facing side of the staple legs **804**. In yet other instances, an array of barbs extending from the inwardly-facing side of the staple legs **804** may be the same length as an array of barbs extending from the outwardly-facing side of the staple legs **804**.

As discussed above, the barbs extending from the staple legs **804** can assist in retaining the staple within the tissue if the staple legs **804** are malformed and/or unintentionally unformed. Certain circumstances are contemplated, however, where a staple including one or more of the barbs disclosed herein is inserted into tissue and remains intentionally unformed. In any event, staples including one or more of the barbs disclosed herein can be useful in stapling thick tissue. More particularly, in some instances, the presence of thick and/or dense tissue between a staple cartridge and an anvil and/or the presence of thick and/or dense tissue within a staple may prevent the staple from becoming fully

formed or closed. For instance, the staple may not be fully closed into a B-form configuration or the staple may not be closed at all. In such instances, the barbs of the unclosed staples may inhibit or prevent the tissue from being pulled out of the staple, for example. An array of barbs extending along the length of a staple leg may permit the leg to remain retained in the tissue regardless of the thickness of the tissue.

Various embodiments are contemplated in which at least one barbed staple, such as barbed staple **800**, for example, are removably stored within a staple cartridge, such as the staple cartridge **22000** illustrated in FIGS. **10-12**, for example. Certain embodiments are envisioned in which a staple cartridge includes only barbed staples while other embodiments are envisioned which utilize barbed staples and non-barbed staples. For instance, a first row of staples can comprise barbed staples while a second row of staples can comprise non-barbed staples. In some instances, the staples stored within a staple cartridge can have the same, or essentially the same, unformed height. At least with regard to U-shaped and/or V-shaped staples, for example, the unformed height of a staple can be defined as the vertical distance between the bottom of the base of the staple and the tips of the staple legs. Such a measurement can be taken before the staples are inserted into the staple cartridge, when the staples are removably stored within the staple cartridge, and/or before the staples are deformed against the anvil. In some instances, barbed staples arranged in a first row in a staple cartridge can comprise a first unformed height and barbed staples arranged in a second row in the staple cartridge can comprise a second unformed height. Barbed staples in a third row in the staple cartridge can comprise the first unformed height, the second unformed height, or a third unformed height. The first row, the second row, and/or the third row of barbed staples can be positioned on the same side of a knife slot defined in the staple cartridge or on opposite sides of the knife slot. In use, the barbed staples removably stored in a staple cartridge can be formed to the same formed height or different formed heights. The formed height of a staple can be defined as the overall vertical distance of the staple after it has been deformed against an anvil. At least with regard to a staple that has been deformed into a B-form, for example, the formed height of the staple can be measured between the bottom of the base of the staple and the top-most portion of the staple legs. In some instances, barbed staples arranged in a first row in a staple cartridge can be deformed to a first formed height and barbed staples arranged in a second row in the staple cartridge can be deformed to a second formed height. Barbed staples in a third row in the staple cartridge can comprise the first formed height, the second formed height, or a third formed height. The first row, the second row, and/or the third row of barbed staples can be positioned on the same side of a knife slot defined in the staple cartridge or on opposite sides of the staple cartridge. As the reader will appreciate, the staples depicted in FIGS. **10-12** have been deformed to different formed heights. Barbed staples **800**, for example, could be utilized in staple cartridges and/or stapling instruments which create staple rows having different formed heights. A first row of barbed staples **800** could be deformed to a first formed height and a second row of barbed staples **800** could be deformed to a second formed height. In various instances, a third row of barbed staples **800** could be deformed to a third formed height. In some instances, the barbed staples **800** deformed to different heights can begin with the same, or essentially the same, unformed height. In certain instances, the barbed staples **800** deformed to different formed heights can begin with different unformed heights. Various structures can be utilized to form staples to different formed heights. For instance, movable drivers supporting the staples can support the staples at different distances relative to the anvil. In some instances, the anvil can include staple forming pockets having different depths. In various instances, a staple driver can include a cradle configured to support the base of a staple and push the staple upwardly toward a forming pocket defined in the anvil. The formed height of a staple can be determined by the distance between the bottom surface of the cradle and the top surface of the forming pocket. U.S. Pat. No. 8,317,070, entitled SURGICAL STAPLING DEVICES THAT PRODUCE FORMED STAPLES HAVING DIFFERENT LENGTHS, issued on Nov. 27, 2012, is incorporated by reference in its entirety. In certain instances, the deck of a staple cartridge can include stepped surfaces, as illustrated in FIG. **1**. A first row of staple cavities can be defined in a first step and a second row of staple cavities can be defined in a second step wherein the first step and the second step can be vertically offset from one another. For instance, the first step can be positioned vertically above, or closer to, the anvil than the second step. In certain instances, a wall can be defined between the first step and the second step. In some instances, the deck of a staple cartridge can comprise a first step, a second step positioned vertically above the first step, and a third step positioned vertically above the second step. Various embodiments are envisioned in which the deck of a staple cartridge includes any suitable number of steps and any suitable number of walls between the steps. A first row of staple cavities can be defined in the first step, a second row of staple cavities can be defined in the second step, and/or a third row of staple cavities can be defined in the third step, for example. The first row of staple cavities can include staples having a first unformed height, the second row of staple cavities can include staples having a second unformed height, and/or the third row of staple cavities can include staples having a third unformed height, for example. Various embodiments are envisioned in which a staple cartridge includes any suitable number of staple rows having different unformed heights. The staples in the first row of staple cavities can be deformed to a first formed height, the staples in the second row of staple cavities can be deformed to a second formed height, and/or the third row of staple cavities can be deformed to a third formed height, for example. Various embodiments are envisioned in which a staple cartridge includes any suitable number of staple rows which are deformed to different formed heights. In addition to or in lieu of having different formed staple heights, an end effector of a stapling instrument can have different tissue gaps. For instance, referring generally to FIGS. **10** and **11**, a gap can be defined between the cartridge deck surface **22011** of a staple cartridge and the anvil tissue compression surface **10063** of an anvil. This gap can be configured to receive tissue T. This gap can also be configured to receive a tissue thickness compensator; however, a barbed staple may or may not be used with a tissue thickness compensator and the discussion provided with respect to barbed staples can be applicable in either circumstance. In any event, the reader will appreciate that the anvil tissue compression surface **10063** is stepped. The anvil tissue compression surface **10063** comprises a first portion positioned vertically above a second portion. When the anvil and the staple cartridge of an end effector are in a closed condition, as illustrated in FIG. **11**, a first gap distance is defined between an outer portion of the anvil tissue compression surface **10063** and the cartridge deck surface **22011** and a second, different, gap distance is defined between an inner portion of

the anvil tissue compression surface **10063** and the cartridge deck surface **22011**. The first gap distance is illustrated as being larger than the second gap distance, but it is possible for the first gap distance to be shorter than the second gap distance. Tissue compressed between the anvil and the staple cartridge in the shorter gap distance can be compressed more than tissue in the larger gap distance. The barbs of a barbed staple **800**, for example, may engage the tissue differently depending on whether the tissue is positioned within a shorter tissue gap or a larger tissue gap. More particularly, tissue compressed within a shorter tissue gap may seek to re-expand more after it is released from an end effector than tissue compressed within a larger tissue gap and the barbs of a barbed staple may inhibit or resist this re-expansion, depending on their configuration and/or position on the barbs. In other instances, the barbs may be configured and/or positioned so as to not inhibit or resist the re-expansion of the tissue. As the reader will appreciate, anvil tissue compression surface **10063** is stepped and the cartridge deck surface is flat, or at least substantially flat, and, thus, the difference in tissue gaps defined within the end effector is a function of the height of the stepped anvil surfaces. Other embodiments are envisioned. For instance, the anvil tissue compression surface can be flat, or at least substantially flat, and the cartridge deck surface can be stepped. In other instances, the anvil tissue compression surface and the cartridge deck surface can both be stepped. In any event, different gap distances can be defined between the anvil tissue compression surface and the cartridge deck surface. While two gap distances have been illustrated in FIGS. **10** and **11**, more than two gap distances may be possible, such as three gap distances, for example. With further reference to FIGS. **10** and **11**, a first longitudinal row of forming pockets can be arranged within a first portion of an end effector having first tissue gap distance and a second longitudinal row of forming pockets can be arranged within a second portion of the end effector having a second tissue gap distance which is different than the first tissue gap distance. In some instances, the end effector can include a third longitudinal row of forming pockets arranged within a third portion of the end effector having a third tissue gap distance which is different than the first tissue gap distance and the second tissue gap distance. In certain instances, the end effector can include a third longitudinal row of forming pockets arranged within a third portion of the end effector having a tissue gap distance which is the same as the first tissue gap distance or the second tissue gap distance. The reader will appreciate that an end effector can have different tissue gap distances and/or different formed staple heights. An end effector can have one, the other, or both. In certain instances, shorter formed staple heights can be associated within shorter tissue gap distances while larger formed staple heights can be associated with larger tissue gap distances. In other instances, shorter formed staple heights can be associated with larger tissue gap distances while larger formed staple heights can be associated with shorter tissue gap distances. Further to the above, a staple can include a U-shape configuration in its unformed state. A U-shape staple can comprise a base and two staple legs extending from the base wherein the staple legs extend in parallel directions to each other. Also further to the above, a staple can include a V-shape configuration in its unformed state. A V-shape configuration can comprise a base and two staple legs extending from the base wherein the staple legs extend in directions which are not parallel.

Various embodiments described herein are described in the context of linear end effectors and/or linear fastener cartridges. Such embodiments, and the teachings thereof, can be applied to non-linear end effectors and/or non-linear fastener cartridges, such as, for example, circular and/or contoured end effectors. For example, various end effectors, including non-linear end effectors, are disclosed in U.S. patent application Ser. No. 13/036,647, filed Feb. 28, 2011, entitled SURGICAL STAPLING INSTRUMENT, now U.S. Patent Application Publication No. 2011/0226837, which is hereby incorporated by reference in its entirety. Additionally, U.S. patent application Ser. No. 12/893,461, filed Sep. 29, 2012, entitled STAPLE CARTRIDGE, now U.S. Patent Application Publication No. 2012/0074198, is hereby incorporated by reference in its entirety. U.S. patent application Ser. No. 12/031,873, filed Feb. 15, 2008, entitled END EFFECTORS FOR A SURGICAL CUTTING AND STAPLING INSTRUMENT, now U.S. Pat. No. 7,980,443, is also hereby incorporated by reference in its entirety. The entire disclosure of U.S. Pat. No. 7,845,537, entitled SURGICAL INSTRUMENT HAVING RECORDING CAPABILITIES, which issued on Dec. 7, 2010, is incorporated by reference herein. The entire disclosure of U.S. application Ser. No. 13/118,241, entitled SURGICAL STAPLING INSTRUMENTS WITH ROTATABLE STAPLE DEPLOYMENT ARRANGEMENTS, now U.S. Patent Application Publication No. 2012/0298719, which was filed on May 27, 2011, is incorporated by reference herein.

The devices disclosed herein can be designed to be disposed of after a single use, or they can be designed to be used multiple times. In either case, however, the device can be reconditioned for reuse after at least one use. Reconditioning can include any combination of the steps of disassembly of the device, followed by cleaning or replacement of particular pieces, and subsequent reassembly. In particular, the device can be disassembled, and any number of the particular pieces or parts of the device can be selectively replaced or removed in any combination. Upon cleaning and/or replacement of particular parts, the device can be reassembled for subsequent use either at a reconditioning facility, or by a surgical team immediately prior to a surgical procedure. Those skilled in the art will appreciate that reconditioning of a device can utilize a variety of techniques for disassembly, cleaning/replacement, and reassembly. Use of such techniques, and the resulting reconditioned device, are all within the scope of the present application.

Preferably, the invention described herein will be processed before surgery. First, a new or used instrument is obtained and if necessary cleaned. The instrument can then be sterilized. In one sterilization technique, the instrument is placed in a closed and sealed container, such as a plastic or TYVEK bag. The container and instrument are then placed in a field of radiation that can penetrate the container, such as gamma radiation, x-rays, or high-energy electrons. The radiation kills bacteria on the instrument and in the container. The sterilized instrument can then be stored in the sterile container. The sealed container keeps the instrument sterile until it is opened in the medical facility.

Any patent, publication, or other disclosure material, in whole or in part, that is said to be incorporated by reference herein is incorporated herein only to the extent that the incorporated materials does not conflict with existing definitions, statements, or other disclosure material set forth in this disclosure. As such, and to the extent necessary, the disclosure as explicitly set forth herein supersedes any conflicting material incorporated herein by reference. Any material, or portion thereof, that is said to be incorporated by reference herein, but which conflicts with existing definitions, statements, or other disclosure material set forth

herein will only be incorporated to the extent that no conflict arises between that incorporated material and the existing disclosure material.

While this invention has been described as having exemplary designs, the present invention may be further modified within the spirit and scope of the disclosure. This application is therefore intended to cover any variations, uses, or adaptations of the invention using its general principles. Further, this application is intended to cover such departures from the present disclosure as come within known or customary practice in the art to which this invention pertains.

What is claimed is:

1. A method for altering a tissue thickness compensator for use with a surgical instrument, said method comprising the steps of:

obtaining a tissue thickness compensator comprised at least partially from a material including a glass transition temperature and a melting temperature, wherein said tissue thickness compensator comprises a first shape;

heating said material to a temperature higher than said glass transition temperature and lower than said melting temperature;

applying a modifying member to a tissue-facing side of said tissue thickness compensator;

manipulating said tissue thickness compensator with said modifying member to a second shape different than said first shape by inducing a localized change in a portion of said tissue thickness compensator in contact with said modifying member;

allowing said material to cool below said glass transition temperature; and

releasing said modifying member from said portion of said tissue thickness compensator.

2. The method of claim **1**, wherein said step of obtaining said tissue thickness compensator comprises the steps of:

obtaining a biocompatible polymer comprising a glass transition temperature and a melting temperature;

dissolving said biocompatible polymer in a solvent to produce a solution; and

lyophilizing said solution.

3. The method of claim **1**, wherein said step of manipulating said tissue thickness compensator comprises applying at least one compressive force to said tissue thickness compensator.

4. The method of claim **1**, wherein said step of manipulating said tissue thickness compensator comprises applying at least one tensile force to said tissue thickness compensator.

5. The method of claim **1**, further comprising the step of actively cooling said manipulated tissue thickness compensator below said glass transition temperature.

6. A customized tissue thickness compensator for use with a surgical stapler, wherein said customized tissue thickness compensator is prepared by a process comprising the steps of:

obtaining a tissue thickness compensator comprising a first shape;

transitioning at least a portion of said tissue thickness compensator from an original state to a glassy state;

applying a modifying member to a tissue-facing side of said tissue thickness compensator;

manipulating said at least a portion of said tissue thickness compensator with said modifying member to a second shape by inducing a localized change in a portion of said tissue thickness compensator in contact with said modifying member;

allowing said at least a portion of said tissue thickness compensator to return from said glassy state to a non-glassy state; and

releasing said modifying member from said at least a portion of said tissue thickness compensator.

7. The customized tissue thickness compensator of claim **6**, wherein said step of obtaining said tissue thickness compensator comprises the steps of:

obtaining a biocompatible polymer comprising a glass transition temperature and a melting temperature;

dissolving said biocompatible polymer in a solvent to produce a solution; and

lyophilizing said solution.

8. The customized tissue thickness compensator of claim **6**, wherein said step of manipulating said at least a portion of said tissue thickness compensator comprises applying at least one compressive force to said at least a portion of said tissue thickness compensator.

9. The customized tissue thickness compensator of claim **6**, wherein said step of manipulating said at least a portion of said tissue thickness compensator comprises applying at least one tensile force to said at least a portion of said tissue thickness compensator.

10. The customized tissue thickness compensator of claim **6**, wherein said process comprises the step of actively cooling said at least a portion of said tissue thickness compensator to remove said at least a portion of said tissue thickness compensator from said glassy state to said non-glassy state.

11. The customized tissue thickness compensator of claim **6**, wherein said process comprises the step of maintaining said manipulation of said at least a portion of said tissue thickness compensator for a period of time sufficient to permit said at least a portion of said tissue thickness compensator to maintain said manipulation.

12. The method of claim **1**, wherein said second shape has a greater density than said first shape.

13. The customized tissue thickness compensator of claim **6**, wherein the density of said second shape of said tissue thickness compensator is greater than the density of the first shape of said tissue thickness compensator.

* * * * *