US009900067B2

(12) United States Patent
Oh et al.

(10) Patent No.: US 9,900,067 B2
(45) Date of Patent: Feb. 20, 2018

(54) **METHOD AND APPARATUS FOR TRANSMITTING AND RECEIVING DATA IN A MIMO SYSTEM**

(71) Applicant: **Electronics and Telecommunications Research Institute**, Daejeon (KR)

(72) Inventors: **Jong-Ee Oh**, Daejeon (KR); **Minho Cheong**, Daejeon (KR); **Sok-Kyu Lee**, Daejeon (KR)

(73) Assignee: **Electronics and Telecommunications Research Institute**, Daejeon-si (KR)

(*) Notice: Subject to any disclaimer, the term of this patent is extended or adjusted under 35 U.S.C. 154(b) by 0 days.

(21) Appl. No.: **14/147,447**

(22) Filed: **Jan. 3, 2014**

(65) **Prior Publication Data**

US 2014/0119327 A1 May 1, 2014

Related U.S. Application Data

(63) Continuation of application No. 13/434,681, filed on Mar. 29, 2012, now Pat. No. 8,654,881, which is a (Continued)

(30) **Foreign Application Priority Data**

Mar. 12, 2010 (KR) 10-2010-0022122
Jul. 8, 2010 (KR) 10-2010-0065898
(Continued)

(51) **Int. Cl.**
H04B 7/02 (2017.01)
H04L 1/02 (2006.01)
(Continued)

(52) **U.S. Cl.**
CPC ***H04B 7/0452*** (2013.01); ***H04L 1/0083*** (2013.01); ***H04L 1/08*** (2013.01);
(Continued)

(58) **Field of Classification Search**
CPC H04W 84/12; H04W 4/08; H04W 72/121; H04W 28/06; H04B 7/0452
(Continued)

(56) **References Cited**

U.S. PATENT DOCUMENTS

9,397,785 B1 * 7/2016 Zhang H04L 1/0061
2009/0031185 A1 1/2009 Xhafa et al.
(Continued)

FOREIGN PATENT DOCUMENTS

JP 2007-081702 A 3/2007
JP 2008-072275 A 3/2008
(Continued)

OTHER PUBLICATIONS

Lin X. Cai et al., "A Distributed Multi-User MIMO MAC Protocol for Wireless Local Area Networks", IEEE "Globcom" 2008 proceedings, 2008, pp. 1-5, IEEE.
(Continued)

Primary Examiner — Shuwang Liu
Assistant Examiner — Sung Ahn

(57) **ABSTRACT**

The present invention relates to a method and apparatus for transmitting and receiving data. A data transmission method from a sender terminal to a receiver terminal in a MIMO system using a variable frequency band according to one embodiment of the present invention comprises: repeatedly generating a signal field depending on a frequency band that is applied to the transmission of a data frame; generating a data field including the data; generating a data frame including the signal field and the data field; and transmitting the data frame to the receiver terminal. The present invention is advantageous in that a signal field which is transmitted together with the data being transmitted from the sender terminal to the receiver terminal in the MIMO system can be sent more efficiently.

44 Claims, 61 Drawing Sheets

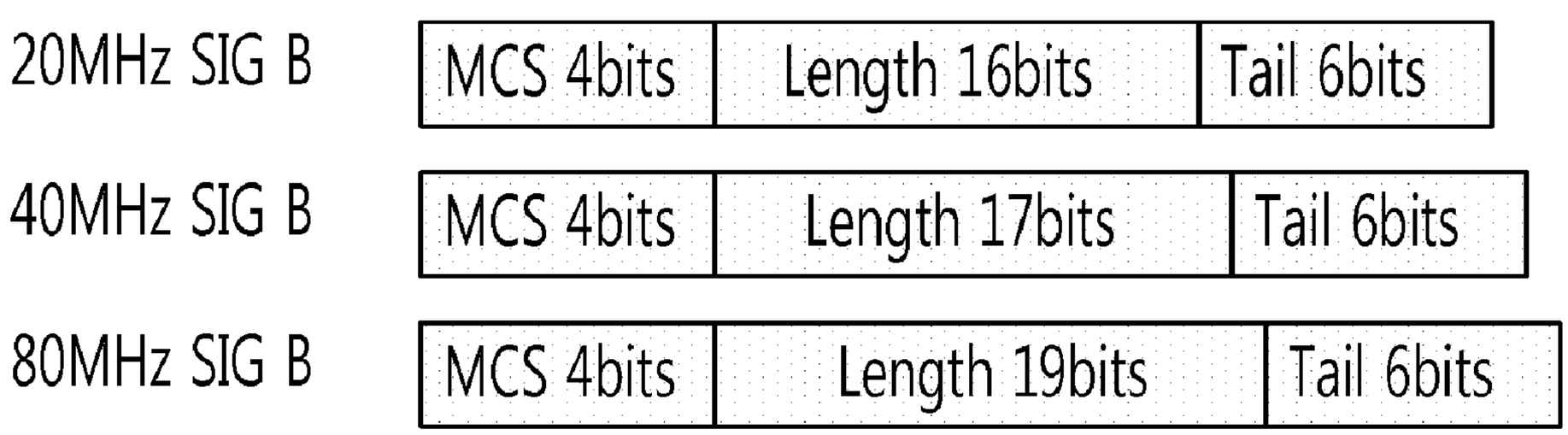

Related U.S. Application Data

continuation of application No. PCT/KR2011/001742, filed on Mar. 11, 2011.

(30) **Foreign Application Priority Data**

Jul. 9, 2010	(KR)	10-2010-0066458
Jul. 14, 2010	(KR)	10-2010-0068167
Jul. 27, 2010	(KR)	10-2010-0072506

(51) **Int. Cl.**

H04B 7/0452	(2017.01)
H04L 1/00	(2006.01)
H04L 1/08	(2006.01)
H04L 1/06	(2006.01)
H04L 5/00	(2006.01)
H04W 28/06	(2009.01)
H04W 84/12	(2009.01)
H04B 7/0413	(2017.01)

(52) **U.S. Cl.**

CPC *H04B 7/0413* (2013.01); *H04L 1/0643* (2013.01); *H04L 5/003* (2013.01); *H04L 5/0007* (2013.01); *H04W 28/06* (2013.01); *H04W 84/12* (2013.01)

(58) **Field of Classification Search**

USPC 375/260, 267; 370/328, 336, 338, 343, 370/474

See application file for complete search history.

(56) **References Cited**

U.S. PATENT DOCUMENTS

2009/0310692	A1	12/2009	Kafle et al.	
2010/0040158	A1*	2/2010	Aggarwal et al.	375/260
2010/0260159	A1*	10/2010	Zhang et al.	370/338
2010/0284393	A1*	11/2010	Abraham et al.	370/343
2010/0309834	A1*	12/2010	Fischer et al.	370/312
2011/0032875	A1*	2/2011	Erceg et al.	370/328
2011/0249660	A1*	10/2011	Noh et al.	370/338
2011/0255620	A1*	10/2011	Jones et al.	375/260
2011/0299468	A1*	12/2011	Van Nee et al.	370/328
2012/0249660	A1*	10/2012	Schuster	347/20
2012/0281774	A1*	11/2012	Lee et al.	375/260
2012/0327915	A1*	12/2012	Kang et al.	370/336

FOREIGN PATENT DOCUMENTS

KR	10-2008-0050536	A	6/2008
KR	10-2009-0084997	A	8/2009
KR	10-2009-0119857	A	11/2009
WO	2006/120979	A1	11/2006
WO	WO 2006/120979	A1	11/2006
WO	2008/118429	A1	10/2008
WO	WO 2008/118429	A1	10/2008
WO	2010/003373	A1	1/2010
WO	WO 2010/003373	A1	1/2010
WO	WO 2010/016596	A1	2/2010
WO	2011/031058	A2	3/2011
WO	2011/153335	A1	12/2011
WO	WO 2011/153335	A1	12/2011
WO	WO 2011/159830	A1	12/2011

OTHER PUBLICATIONS

David Astély et al., "LTE: The Evolution of Mobile Broadband", LTE Part II: 3GPP Release Apr. 8, 2009, pp. 44-51, IEEE.

International Search Report for PCT/KR2011/001742 filed on Mar. 11, 2011.

Joonsuk Kim et al., "Bits Consideration for Signal fields", IEEE, Mar. 2010.

Hongyuan Zhang et al., "802.11ac Preamble Discussions; IEEE 802.11-09/1174r0", IEEE Preamble Discussions, Nov. 16, 2009, pp. 1-10, vol. 802.11ac, IEEE, Piscataway, USA.

Hongyuan Zhang et al., "802.11ac Preamble; IEEE 802.11-10/0070r0", IEEE Preamble, Jan. 18, 2010, pp. 1-11, vol. 802.11ac, IEEE, Piscataway, USA.

Hemanth Sampath et al., "802.11ac Preamble; IEEE 802.11-10/876r0", IEEE Preamble, Jul. 13, 2010, pp. 1-18, vol. 802.11ac, IEEE, Piscataway, USA.

Extended European Search Report for International Application No. PCT/KR2011001742, dated Dec. 17, 2012.

"On the Consideration of Technical Candidates for LTE-advanced", 3GPP TSG RAN WG1 Meeting #53, R1-081809, May 9, 2008, pp. 1-12.

Jaewoo Park et al., "802.11ac MAC Frame Length Indication", IEEE 802.11-10/0358r1, May 18, 2010, pp. 1-9.

Aon Mujtaba et al., "TGn Sync Complete Proposal," IEEE 802.11-04/887r2, Sep. 2004, pp. 1-46, IEEE.

Leonardo Lanante, "IEEE802.11ac Preamble with Legacy 802.11a/n Backward Compatibility", doc. : IEEE 802.11-09/0847r1, Nov. 18, 2009.

Syed Aon Mujtaba, "TGn Sync Complete Proposal", doc. : IEEE 802.11-04/887r2, Sep. 2004, slides 1-46.

* cited by examiner

FIG. 1

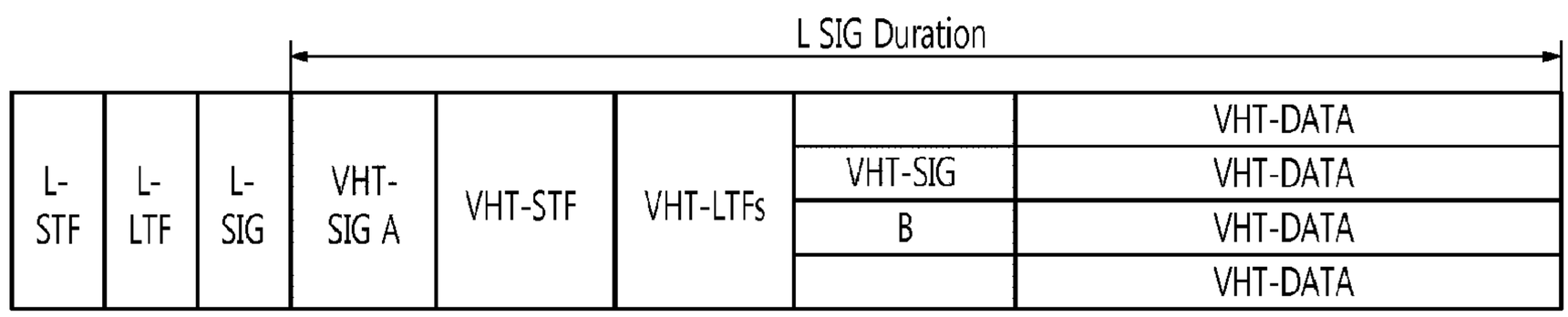
L SIG Duration
L-STF
L-LTF
L-SIG
VHT-SIG A
VHT-STF
VHT-LTFs
VHT-SIG B
VHT-DATA
VHT-DATA
VHT-DATA
VHT-DATA

FIG. 2

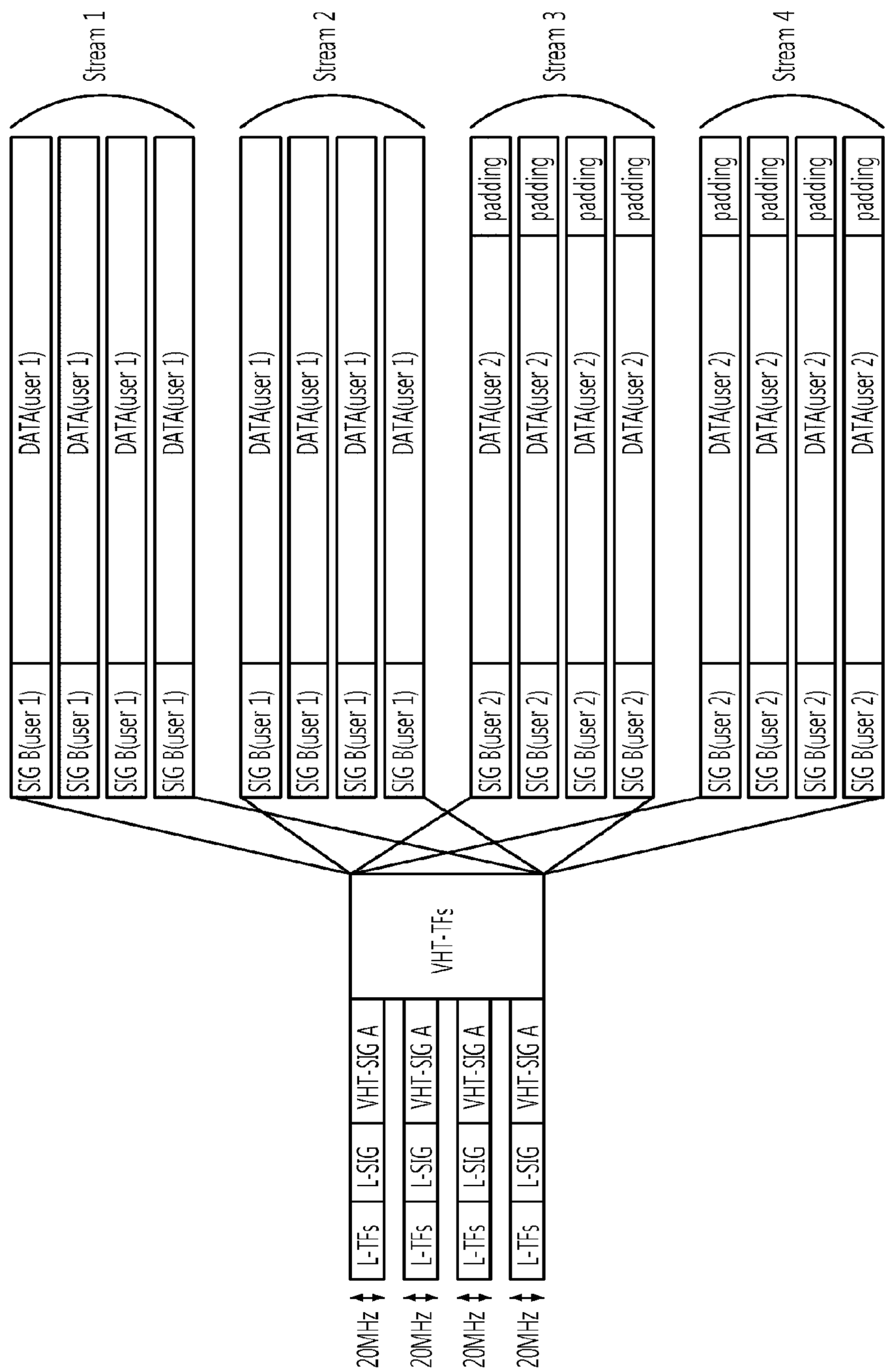
Stream 1
Stream 2
Stream 3
Stream 4
DATA(user 1)
padding
DATA(user 2)
SIG B(user 1)
SIG B(user 2)
VHT-TFs
VHT-SIG A
L-SIG
L-TFs
20MHz

FIG. 3

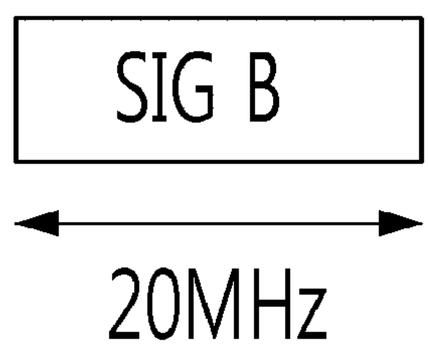

FIG. 4

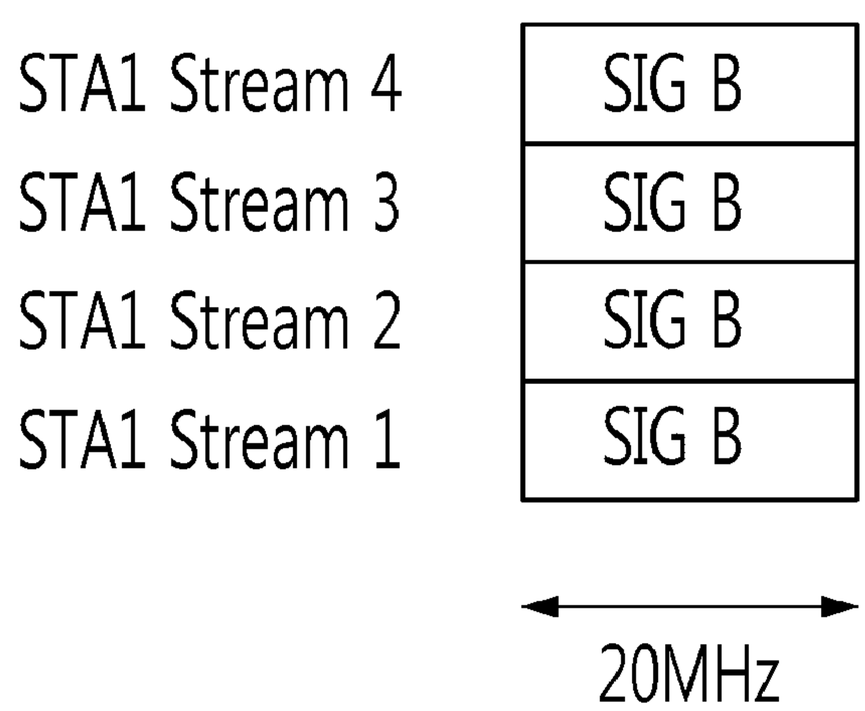
STA1 Stream 4
STA1 Stream 3
STA1 Stream 2
STA1 Stream 1
SIG B
SIG B
SIG B
SIG B
20MHz

FIG. 5

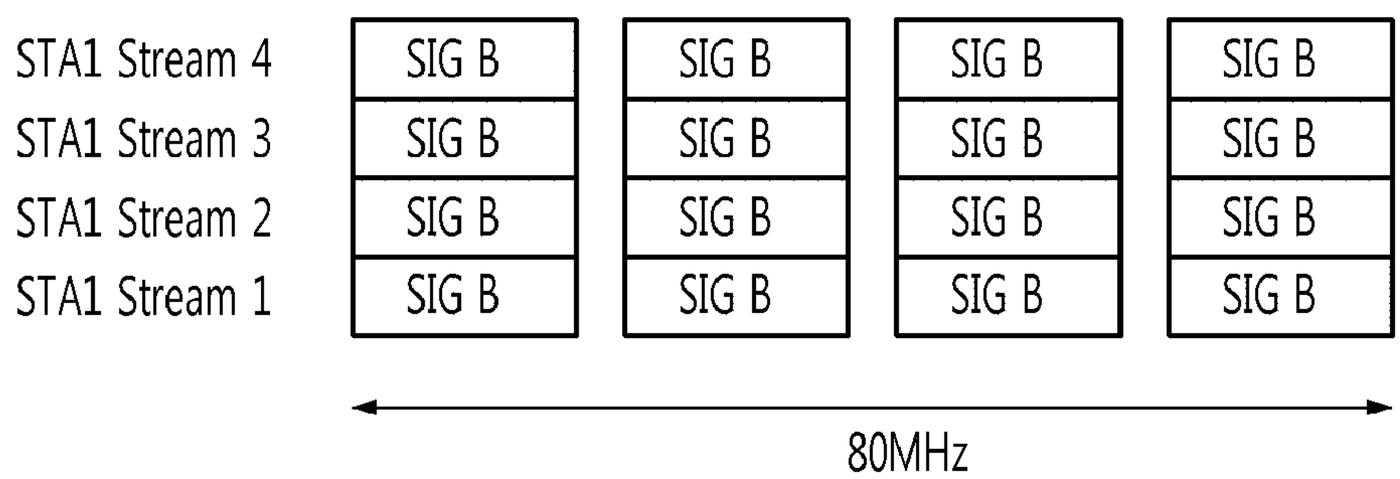
STA1 Stream 4
STA1 Stream 3
STA1 Stream 2
STA1 Stream 1
SIG B
80MHz

FIG. 6

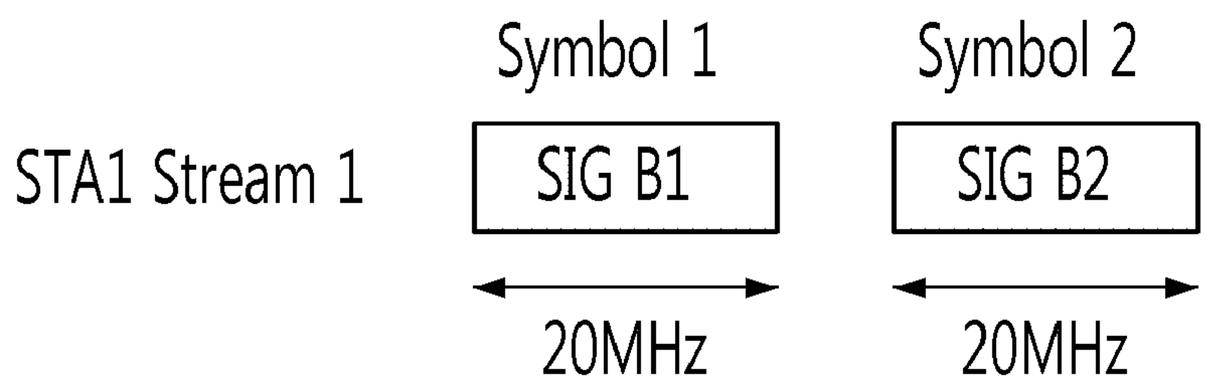

FIG. 7

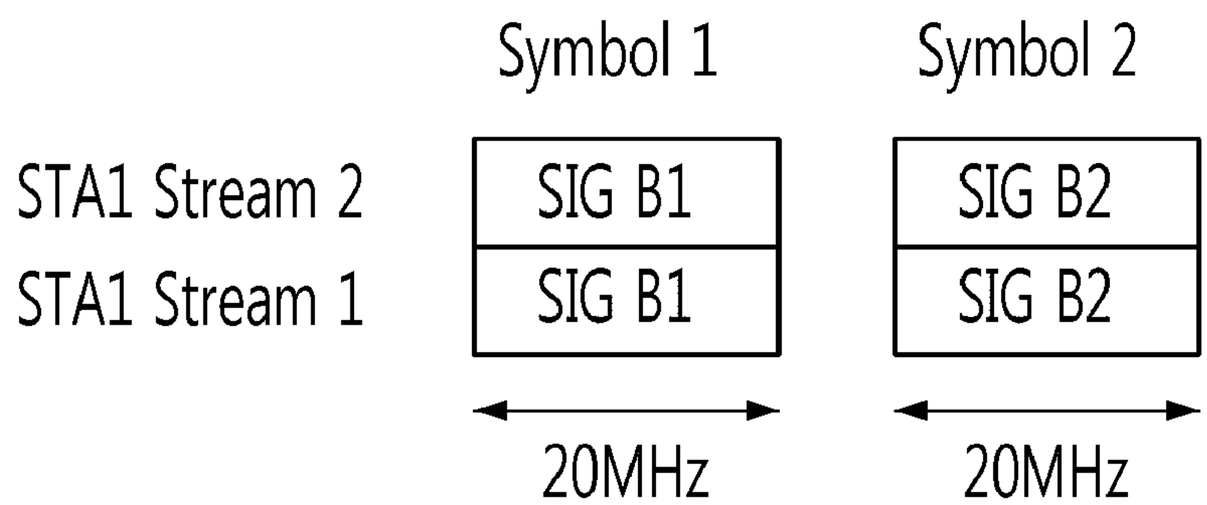
Symbol 1
Symbol 2
STA1 Stream 2
STA1 Stream 1
SIG B1
SIG B1
SIG B2
SIG B2
20MHz
20MHz

FIG. 8

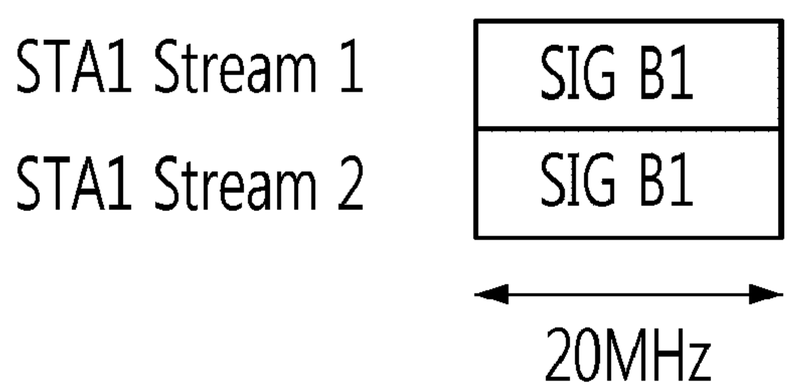

FIG. 9

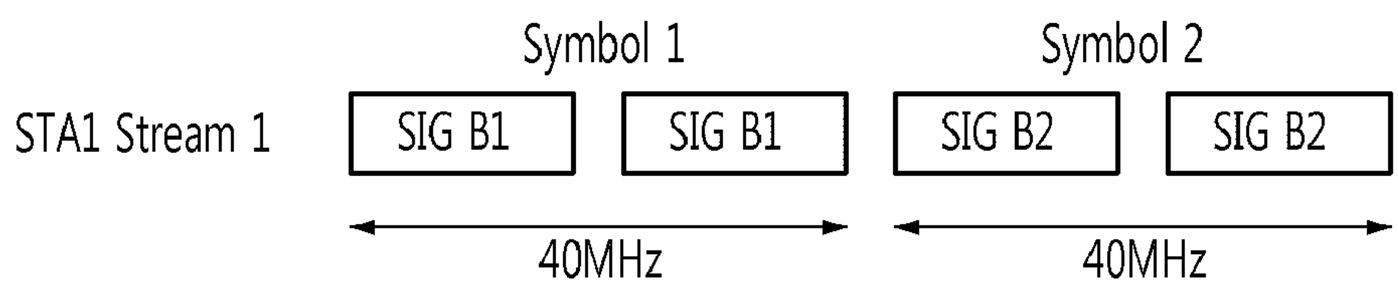
Symbol 1
Symbol 2
STA1 Stream 1
SIG B1
SIG B1
SIG B2
SIG B2
40MHz
40MHz

FIG. 10

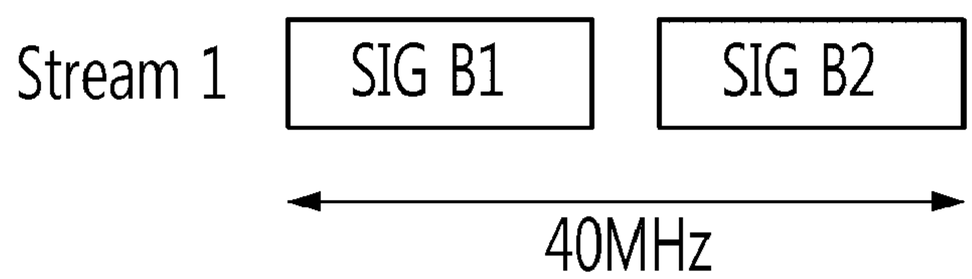

FIG. 11

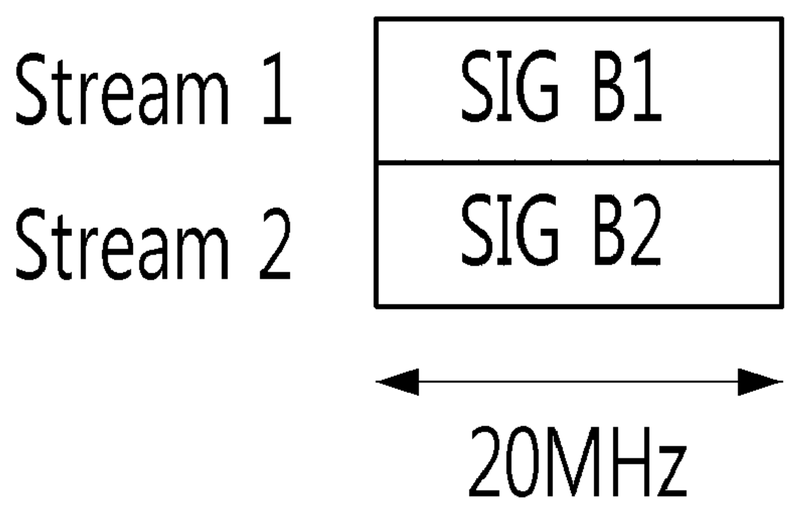

FIG. 12

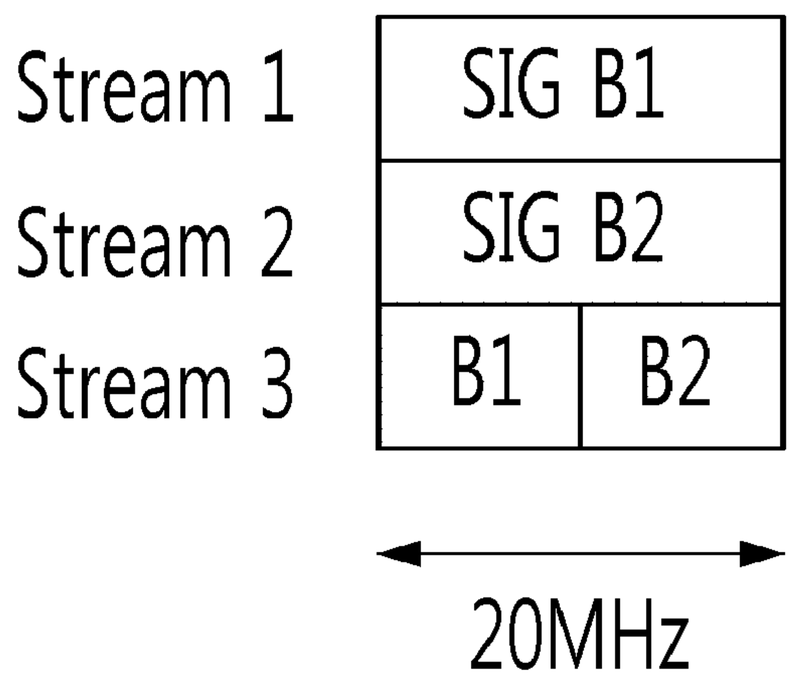

FIG. 13

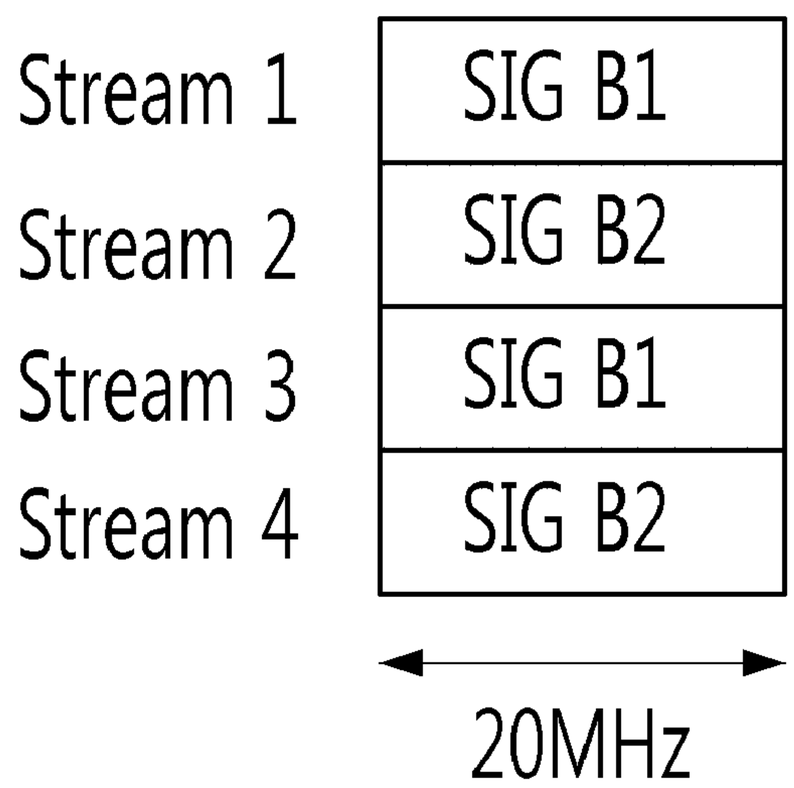
Stream 1
Stream 2
Stream 3
Stream 4
SIG B1
SIG B2
SIG B1
SIG B2
20MHz

FIG. 14

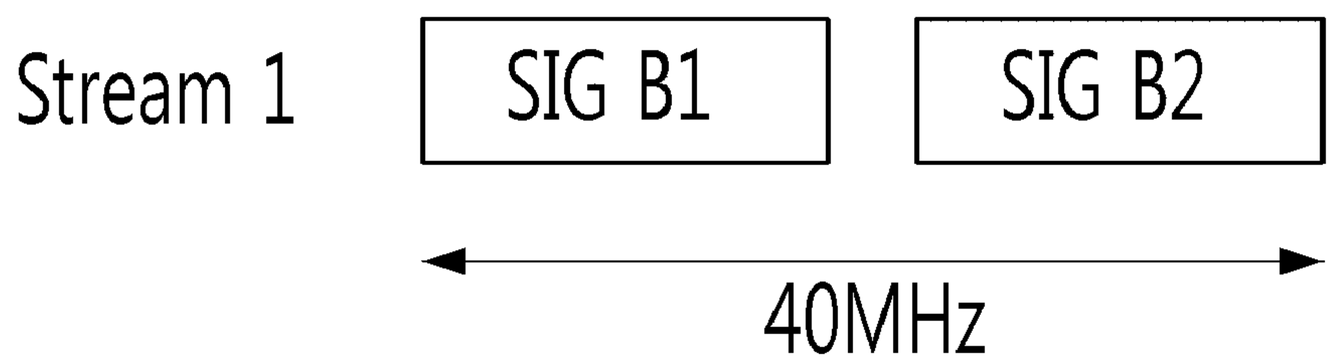

FIG. 15

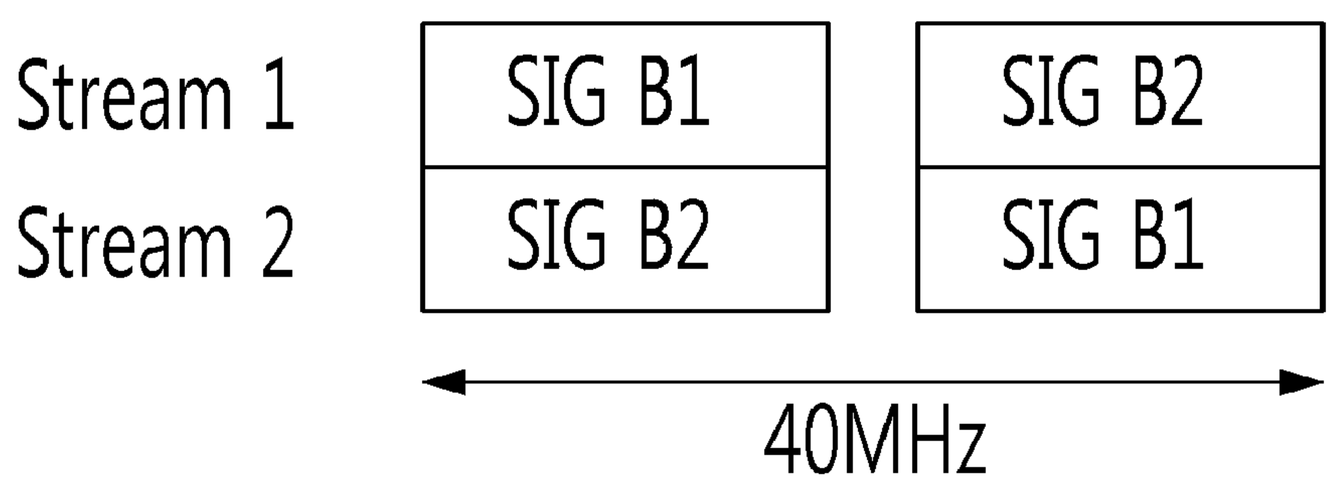

FIG. 16

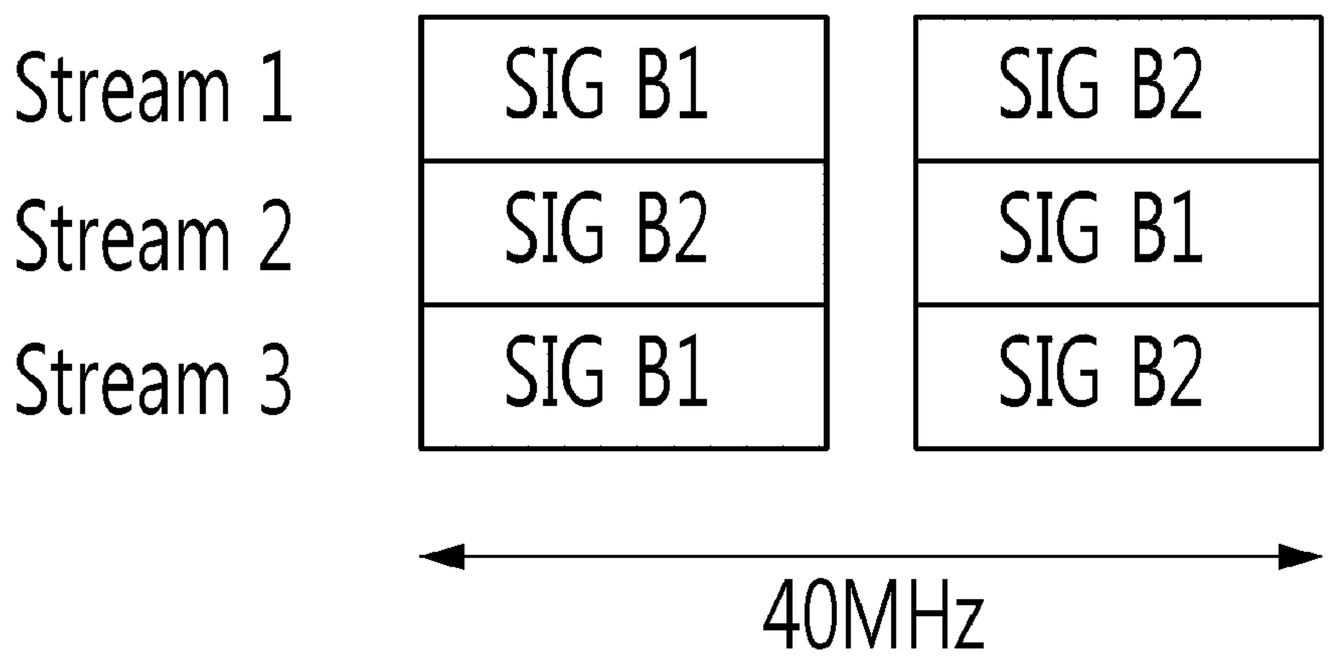
Stream 1
Stream 2
Stream 3
SIG B1
SIG B2
SIG B1
SIG B2
SIG B1
SIG B2
40MHz

FIG. 17

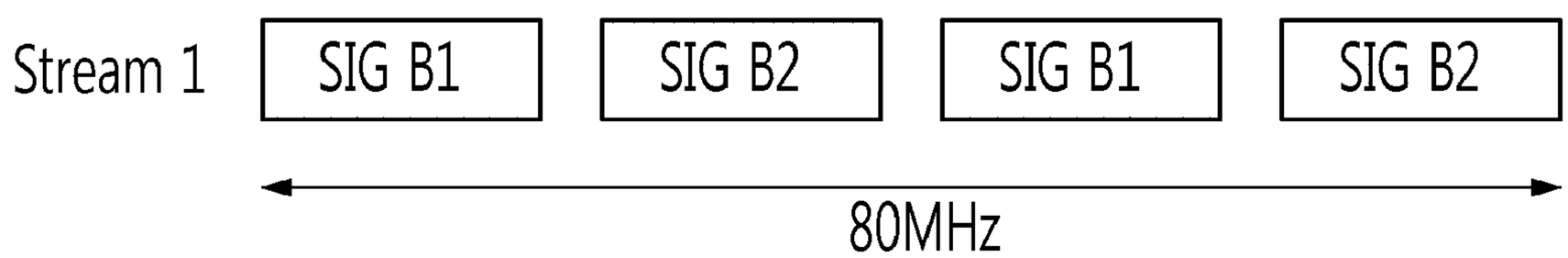

FIG. 18

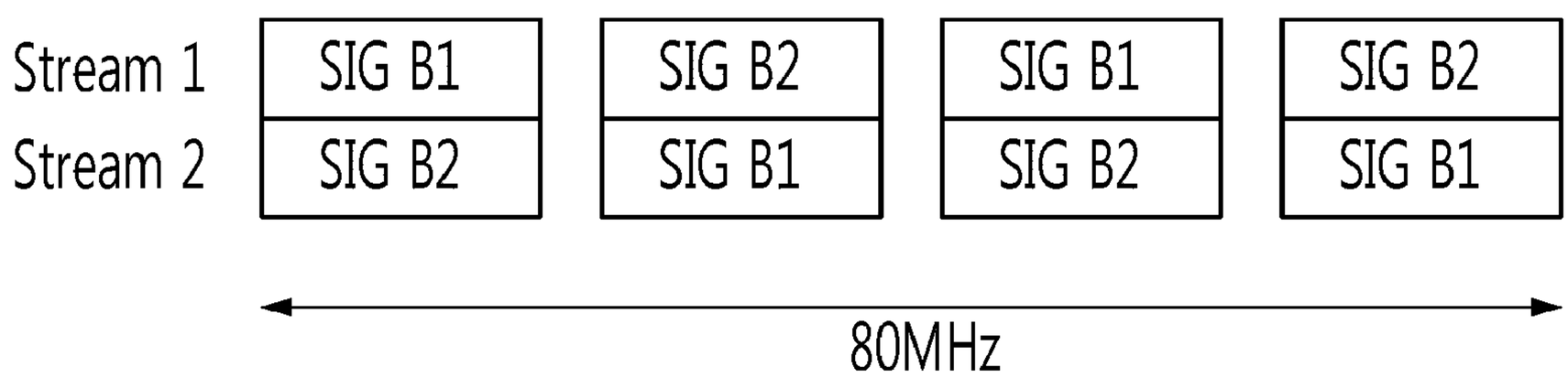
Stream 1
Stream 2
SIG B1
SIG B2
SIG B2
SIG B1
SIG B1
SIG B2
SIG B2
SIG B1
80MHz

FIG. 19

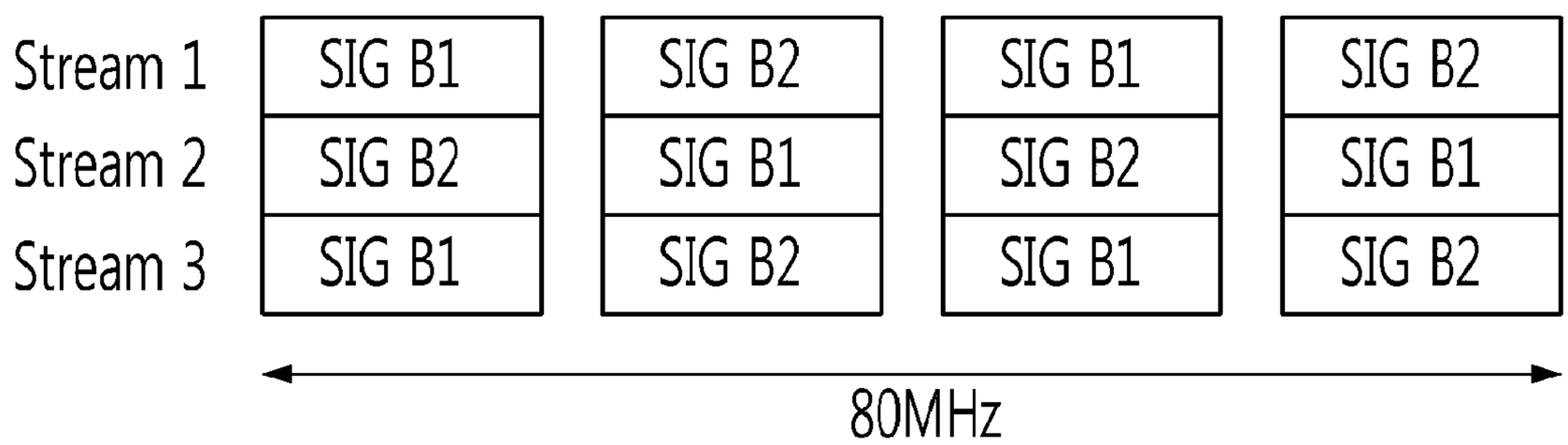
Stream 1
Stream 2
Stream 3
SIG B1
SIG B2
SIG B1
SIG B2
SIG B1
SIG B2
SIG B1
SIG B2
SIG B1
SIG B2
SIG B1
SIG B2
80MHz

FIG. 20

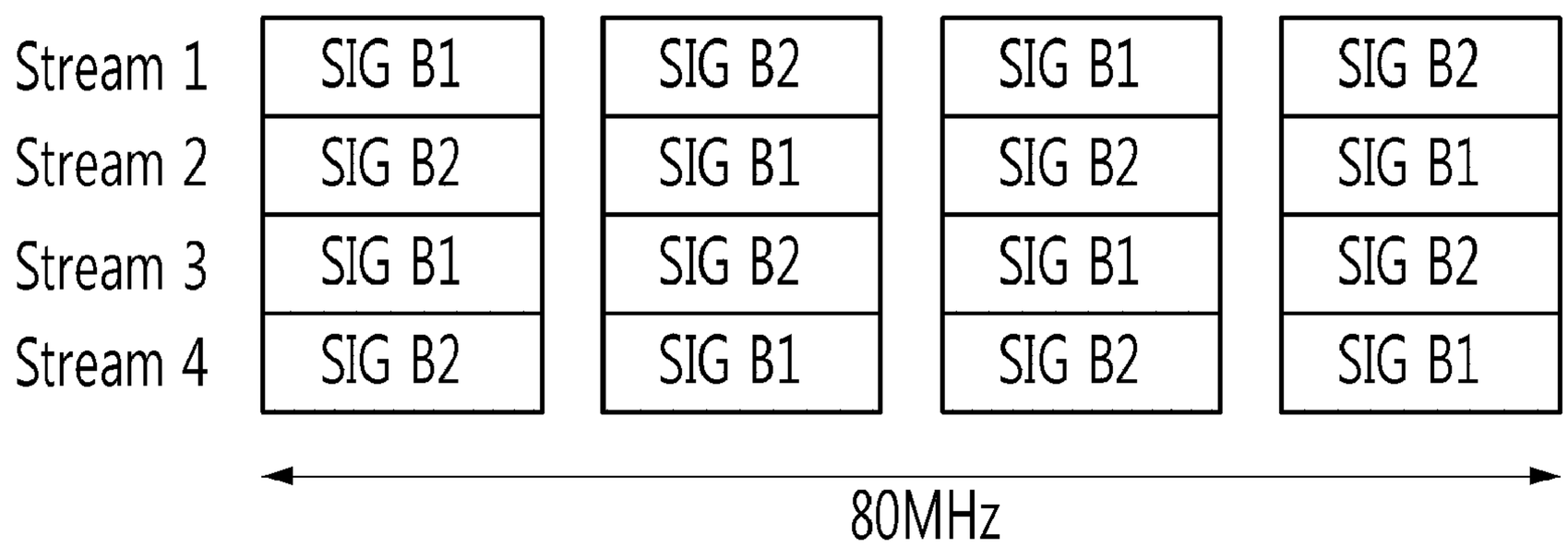
Stream 1
Stream 2
Stream 3
Stream 4
SIG B1
SIG B2
SIG B1
SIG B2
SIG B2
SIG B1
SIG B2
SIG B1
SIG B1
SIG B2
SIG B1
SIG B2
SIG B1
SIG B2
SIG B2
SIG B1
80MHz

FIG. 21

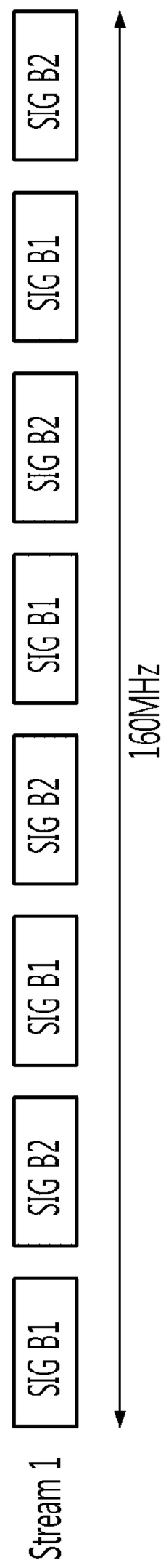
SIG B2
SIG B1
SIG B2
SIG B1
SIG B2
SIG B1
SIG B2
SIG B1
160MHz
Stream 1

FIG. 22

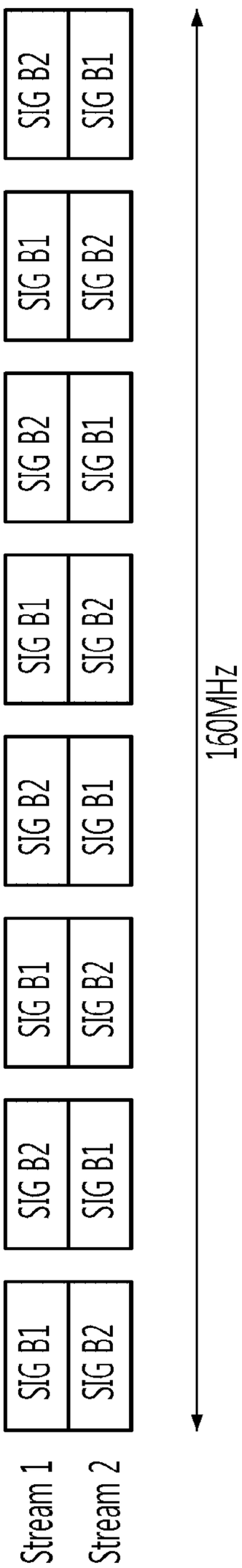
SIG B1
SIG B2
SIG B2
SIG B1
SIG B1
SIG B2
SIG B2
SIG B1
SIG B1
SIG B2
SIG B2
SIG B1
SIG B1
SIG B2
SIG B2
SIG B1
160MHz
Stream 1
Stream 2

FIG. 23

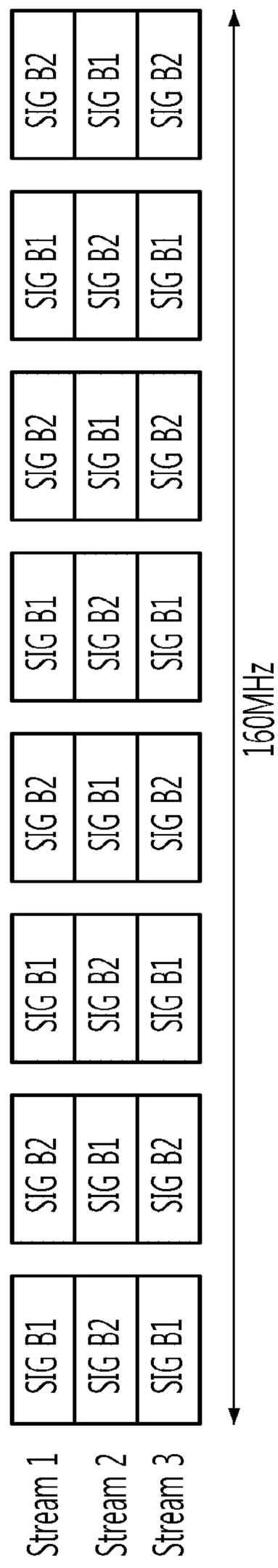
SIG B1
SIG B2
SIG B1
SIG B2
SIG B1
SIG B2
SIG B1
SIG B2
SIG B1
SIG B2
SIG B1
SIG B2
SIG B1
SIG B2
SIG B1
SIG B2
SIG B1
SIG B2
Stream 1
Stream 2
Stream 3
160MHz

FIG. 24

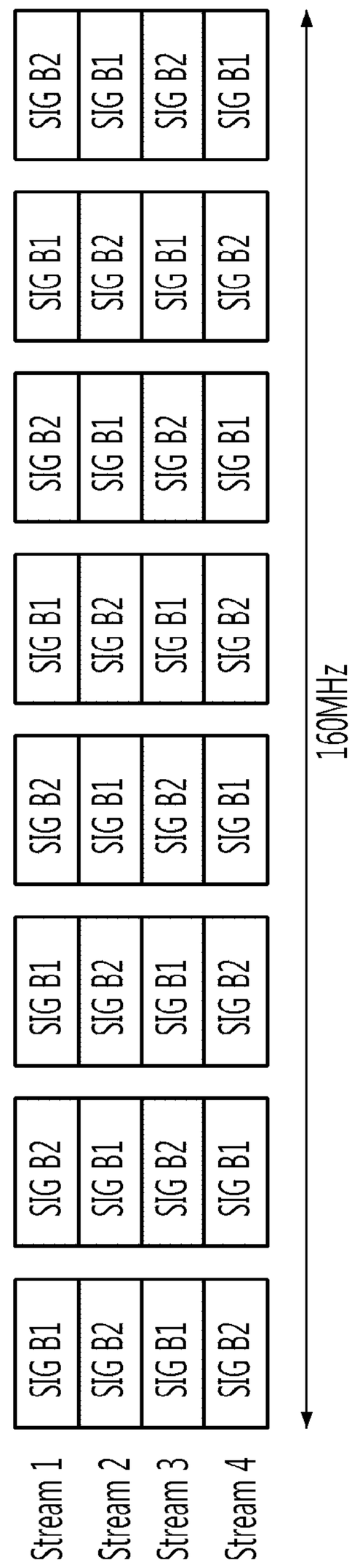
SIG B1
SIG B2
SIG B1
SIG B2
SIG B2
SIG B1
SIG B2
SIG B1
SIG B1
SIG B2
SIG B1
SIG B2
SIG B2
SIG B1
SIG B2
SIG B1
SIG B1
SIG B2
SIG B1
SIG B2
SIG B2
SIG B1
SIG B2
SIG B1
SIG B1
SIG B2
SIG B1
SIG B2
160MHz
Stream 1
Stream 2
Stream 3
Stream 4

FIG. 25

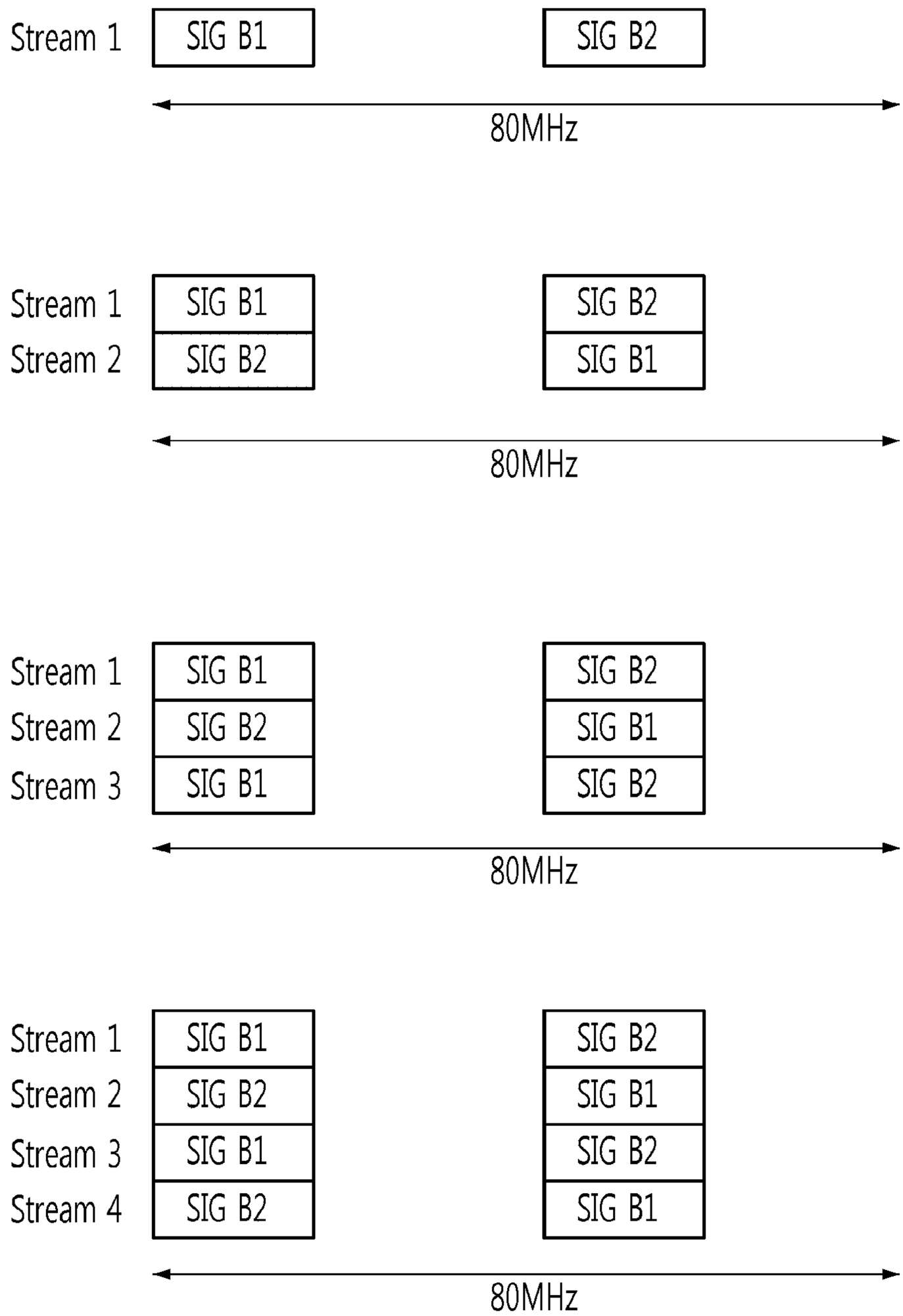
Stream 1
SIG B1
SIG B2
80MHz
Stream 1
Stream 2
SIG B1
SIG B2
SIG B2
SIG B1
80MHz
Stream 1
Stream 2
Stream 3
SIG B1
SIG B2
SIG B1
SIG B2
SIG B1
SIG B2
80MHz
Stream 1
Stream 2
Stream 3
Stream 4
SIG B1
SIG B2
SIG B1
SIG B2
SIG B2
SIG B1
SIG B2
SIG B1
80MHz

FIG. 26

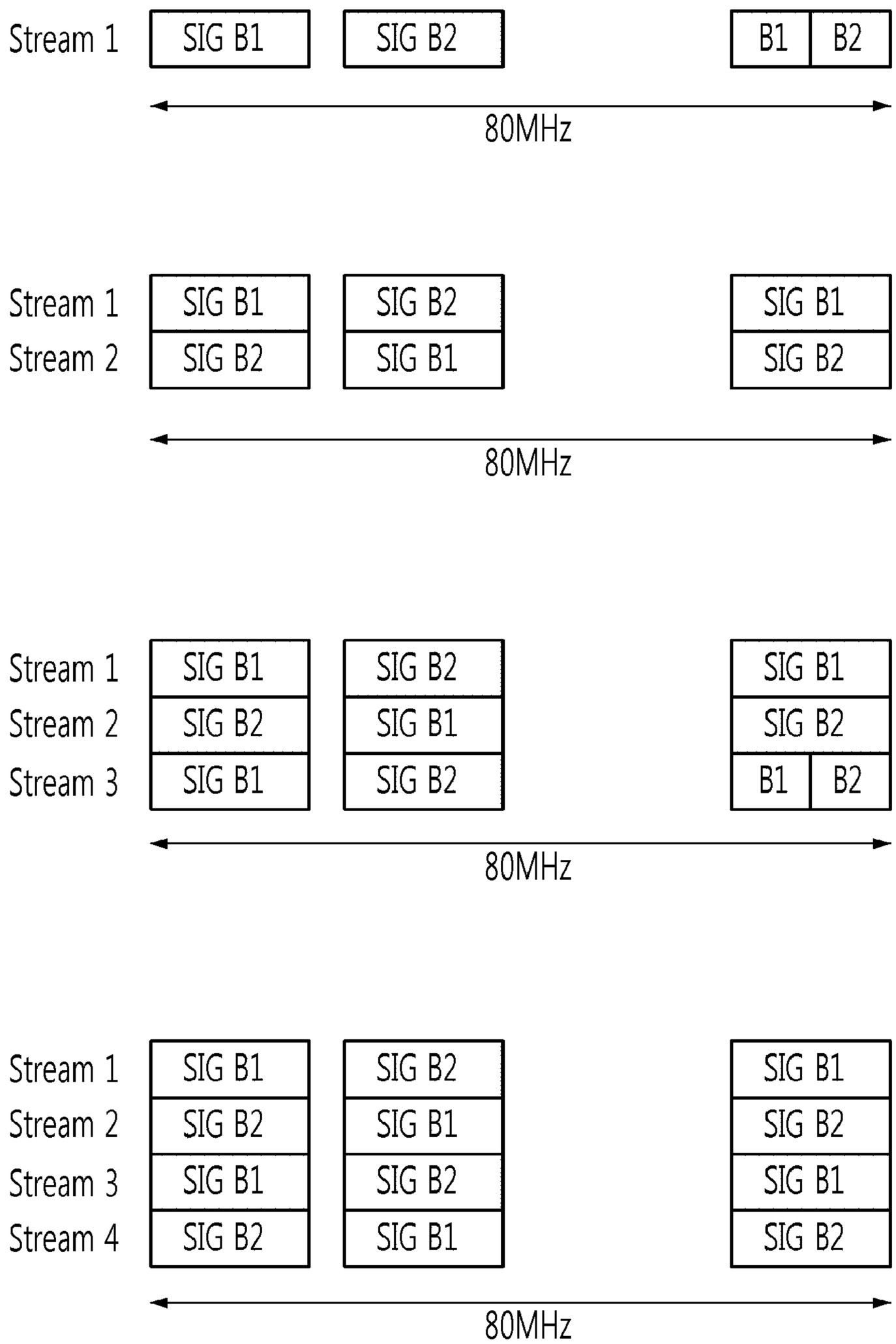
Stream 1
SIG B1
SIG B2
B1
B2
80MHz
Stream 1
Stream 2
SIG B1
SIG B2
SIG B2
SIG B1
SIG B1
SIG B2
80MHz
Stream 1
Stream 2
Stream 3
SIG B1
SIG B2
SIG B1
SIG B2
SIG B1
SIG B2
SIG B1
SIG B2
SIG B1
B1
B2
80MHz
Stream 1
Stream 2
Stream 3
Stream 4
SIG B1
SIG B2
SIG B1
SIG B2
SIG B2
SIG B1
SIG B2
SIG B1
SIG B1
SIG B2
SIG B1
SIG B2
80MHz

FIG. 27

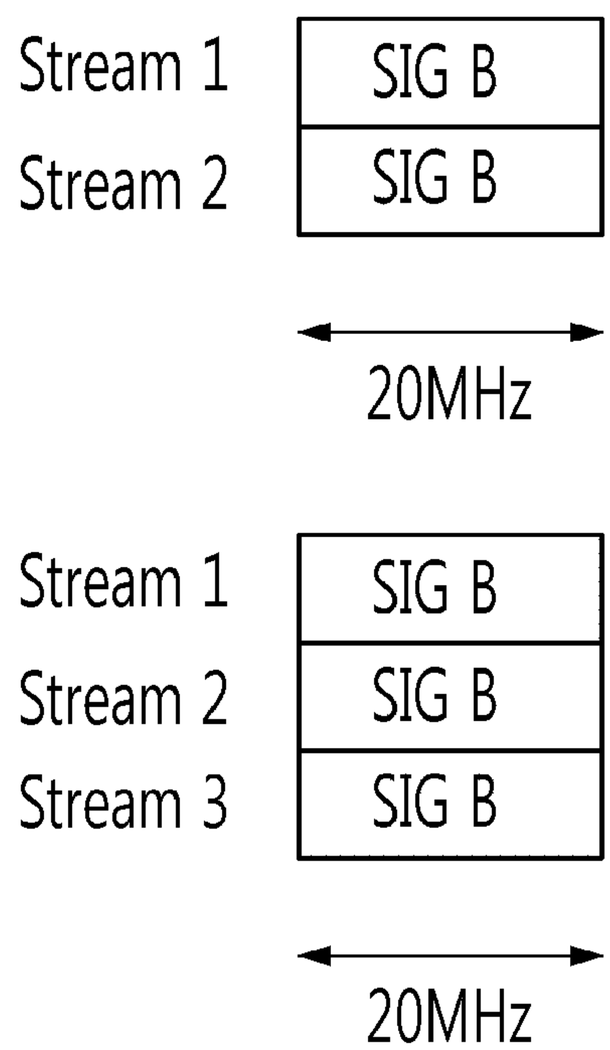
Stream 1
SIG B
Stream 2
SIG B
20MHz
Stream 1
SIG B
Stream 2
SIG B
Stream 3
SIG B
20MHz

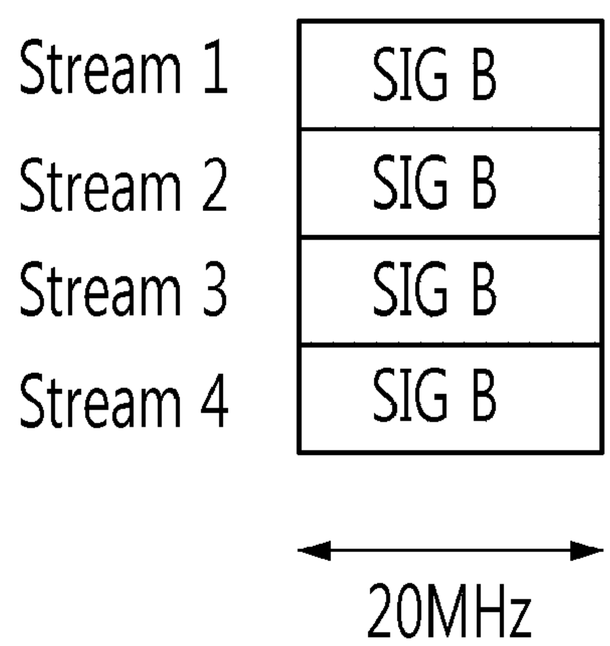
Stream 1
SIG B
Stream 2
SIG B
Stream 3
SIG B
Stream 4
SIG B
20MHz

FIG. 28

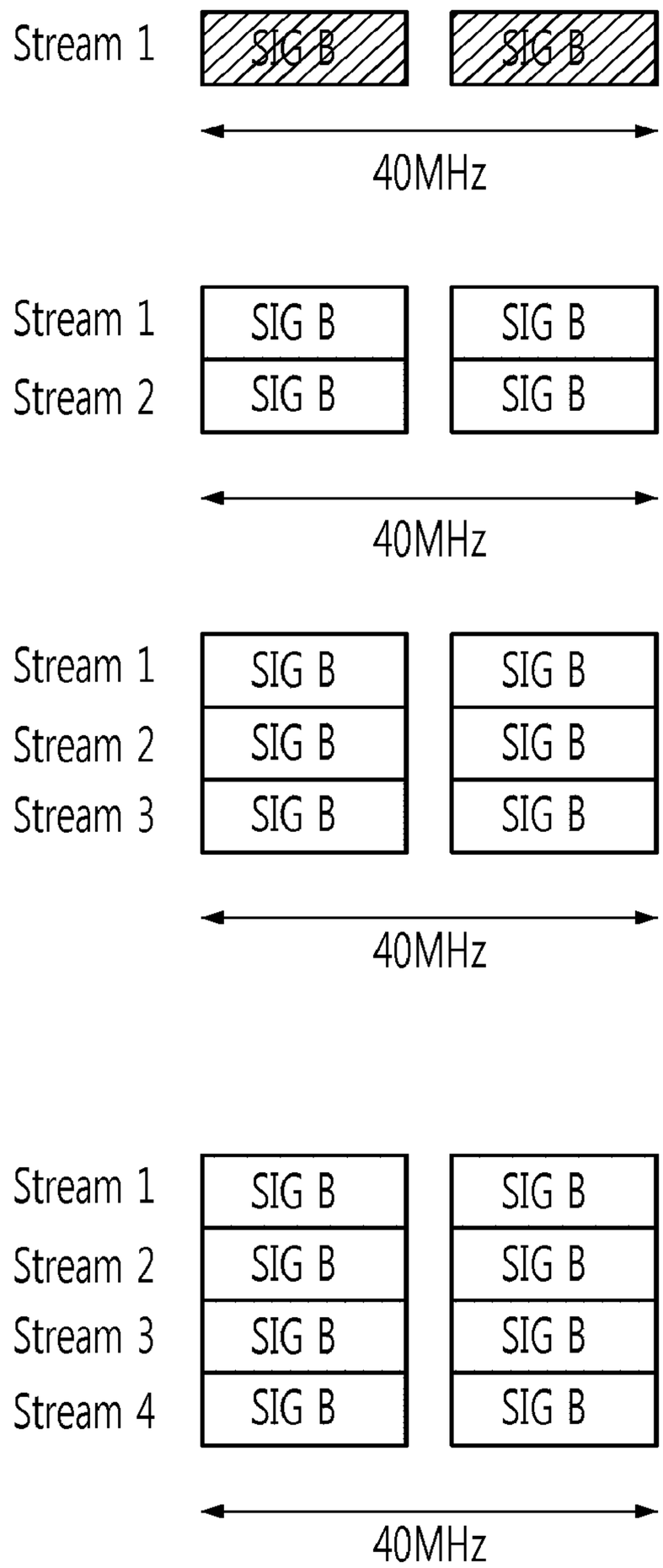
Stream 1
SIG B
SIG B
40MHz
Stream 1
Stream 2
SIG B
SIG B
SIG B
SIG B
40MHz
Stream 1
Stream 2
Stream 3
SIG B
SIG B
SIG B
SIG B
SIG B
SIG B
40MHz
Stream 1
Stream 2
Stream 3
Stream 4
SIG B
SIG B
SIG B
SIG B
SIG B
SIG B
SIG B
SIG B
40MHz

FIG. 29

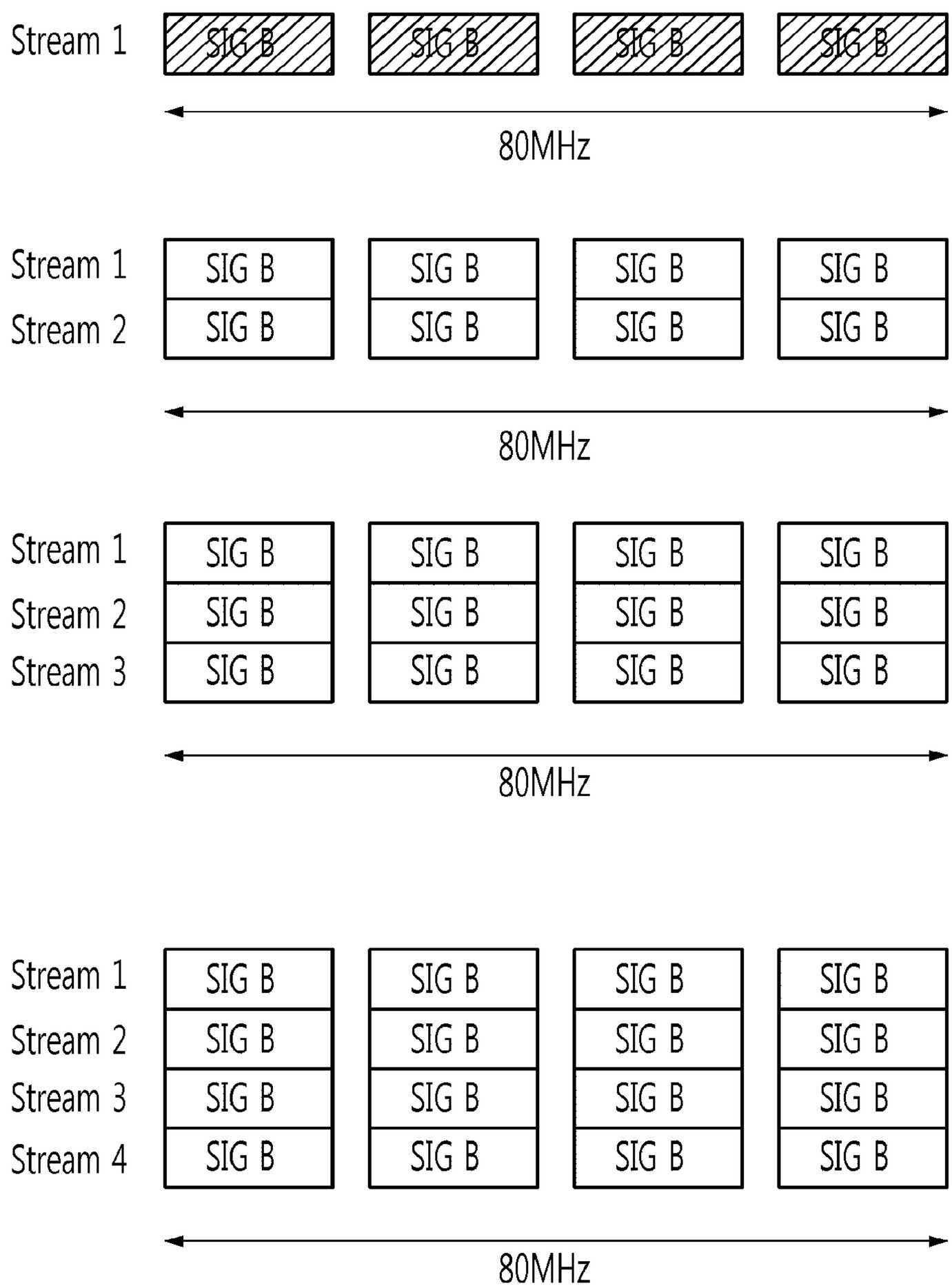
Stream 1
SIG B
SIG B
SIG B
SIG B
80MHz
Stream 1
Stream 2
SIG B
SIG B
SIG B
SIG B
SIG B
SIG B
SIG B
SIG B
80MHz
Stream 1
Stream 2
Stream 3
SIG B
SIG B
SIG B
SIG B
SIG B
SIG B
SIG B
SIG B
SIG B
SIG B
SIG B
SIG B
80MHz
Stream 1
Stream 2
Stream 3
Stream 4
SIG B
SIG B
SIG B
SIG B
SIG B
SIG B
SIG B
SIG B
SIG B
SIG B
SIG B
SIG B
SIG B
SIG B
SIG B
SIG B
80MHz

FIG. 30

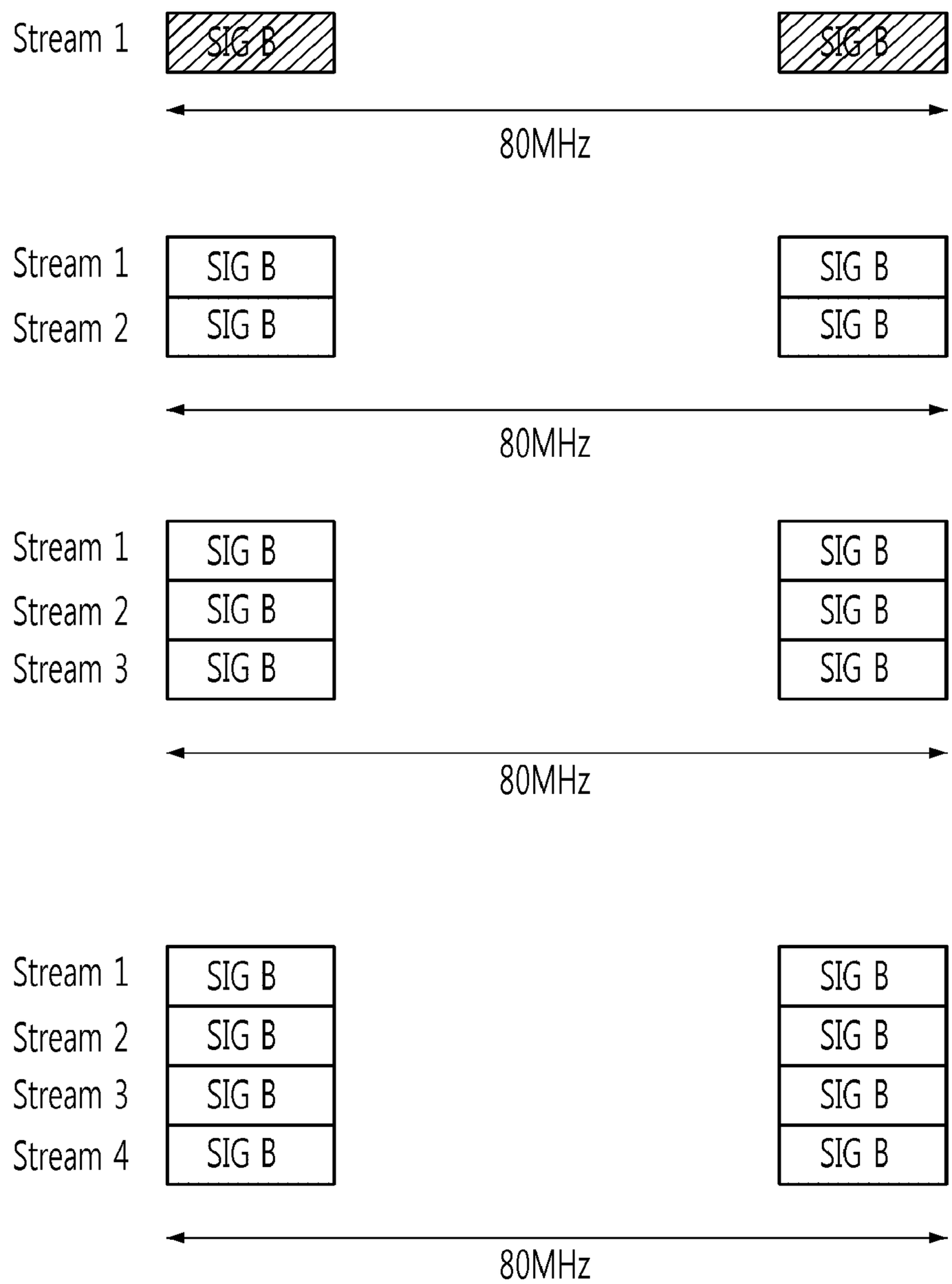
Stream 1
SIG B
SIG B
80MHz
Stream 1
Stream 2
SIG B
SIG B
SIG B
SIG B
80MHz
Stream 1
Stream 2
Stream 3
SIG B
SIG B
SIG B
SIG B
SIG B
SIG B
80MHz
Stream 1
Stream 2
Stream 3
Stream 4
SIG B
SIG B
SIG B
SIG B
SIG B
SIG B
SIG B
SIG B
80MHz

FIG. 31

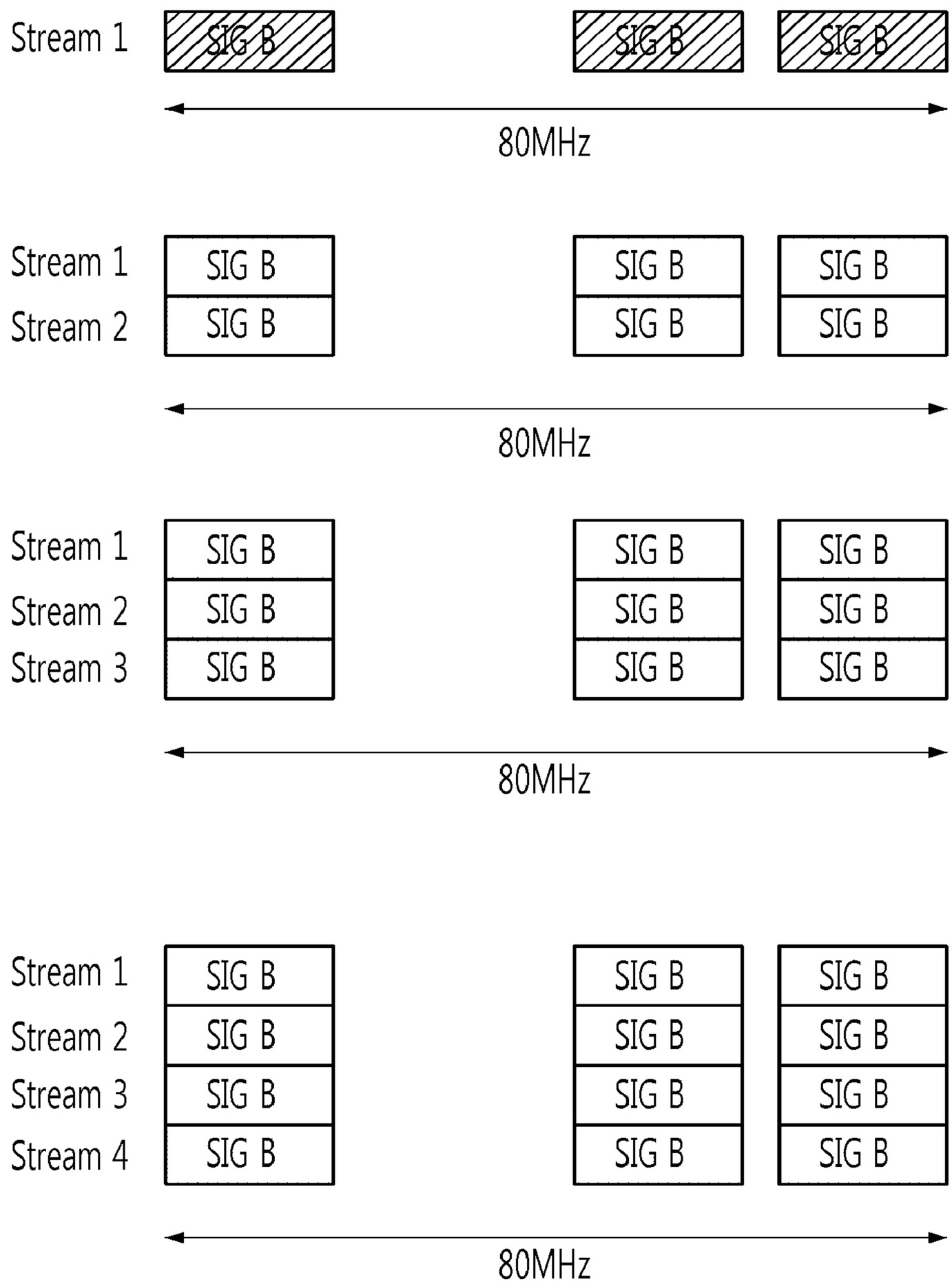
Stream 1
SIG B
SIG B
SIG B
80MHz
Stream 1
Stream 2
SIG B
SIG B
SIG B
SIG B
SIG B
SIG B
80MHz
Stream 1
Stream 2
Stream 3
SIG B
SIG B
SIG B
SIG B
SIG B
SIG B
SIG B
SIG B
SIG B
80MHz
Stream 1
Stream 2
Stream 3
Stream 4
SIG B
SIG B
SIG B
SIG B
SIG B
SIG B
SIG B
SIG B
SIG B
SIG B
SIG B
SIG B
80MHz

FIG. 32

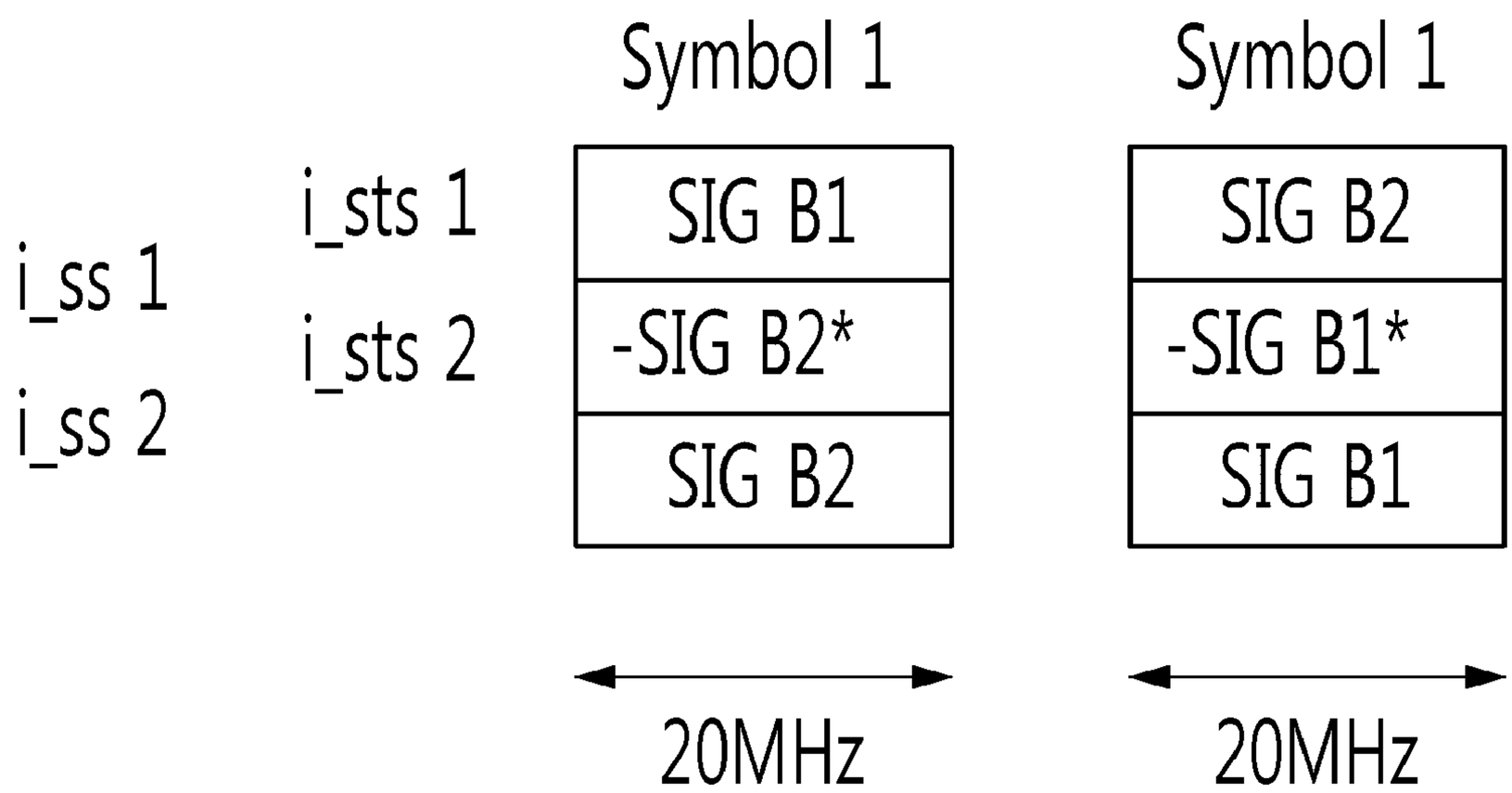
Symbol 1
Symbol 1
i_sts 1
i_sts 2
i_ss 1
i_ss 2
SIG B1
-SIG B2*
SIG B2
SIG B2
-SIG B1*
SIG B1
20MHz
20MHz

FIG. 33

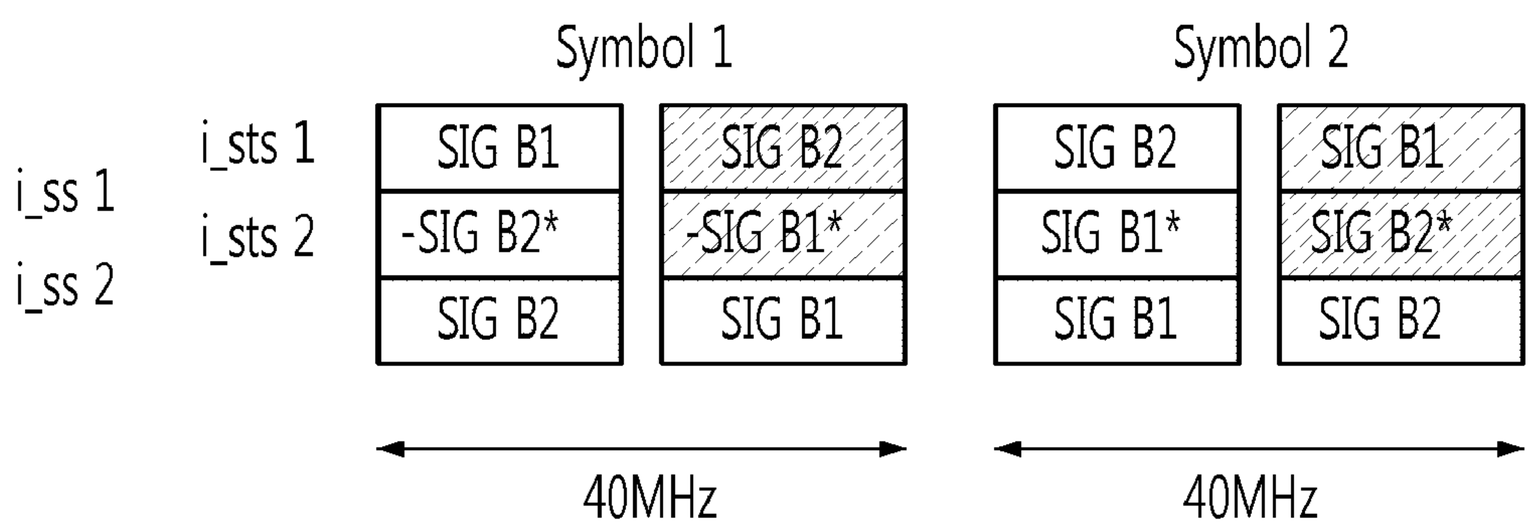
Symbol 1
Symbol 2
i_ss 1
i_ss 2
i_sts 1
i_sts 2
SIG B1
-SIG B2*
SIG B2
SIG B2
-SIG B1*
SIG B1
SIG B2
SIG B1*
SIG B1
SIG B1
SIG B2*
SIG B2
40MHz
40MHz

FIG. 34

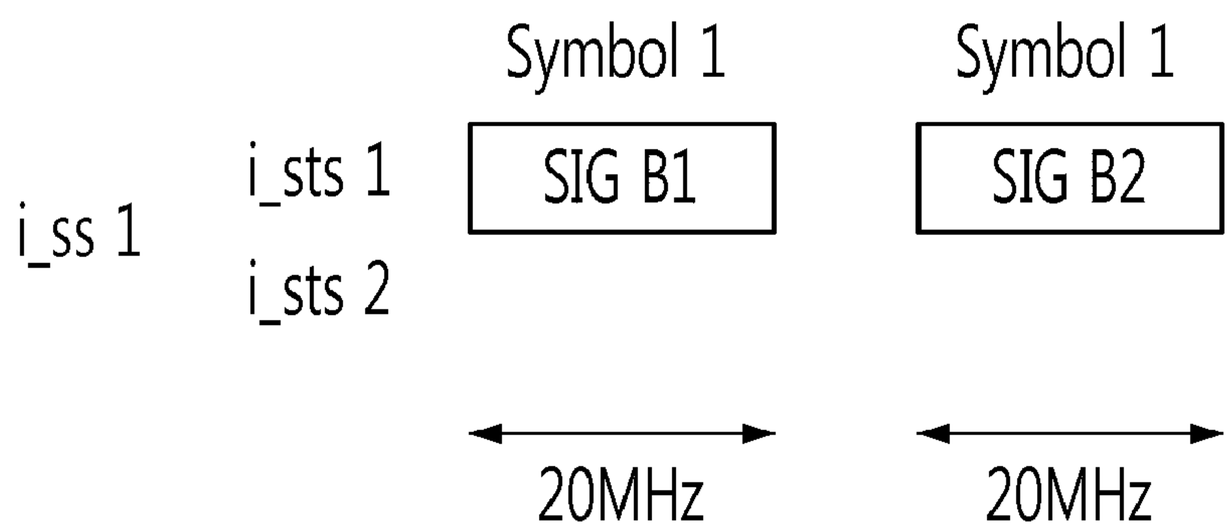

FIG. 35

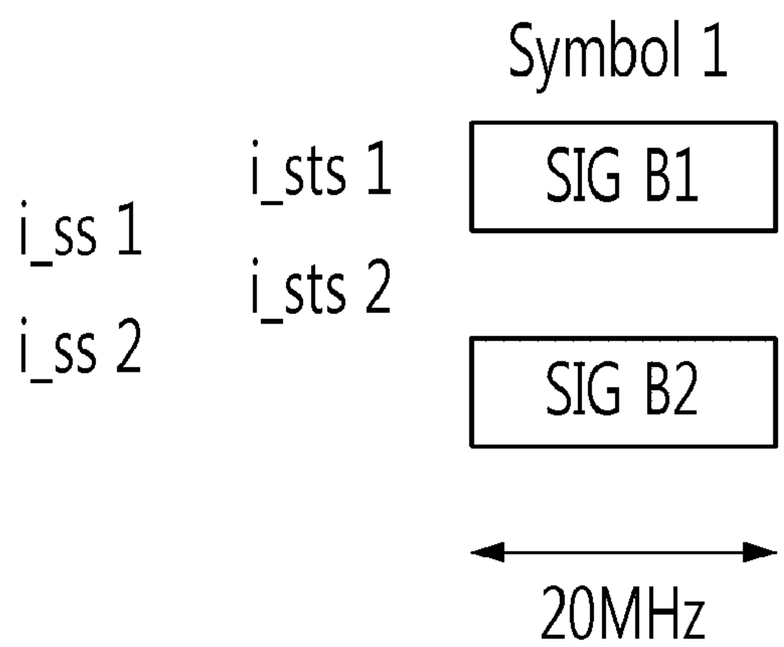

FIG. 36

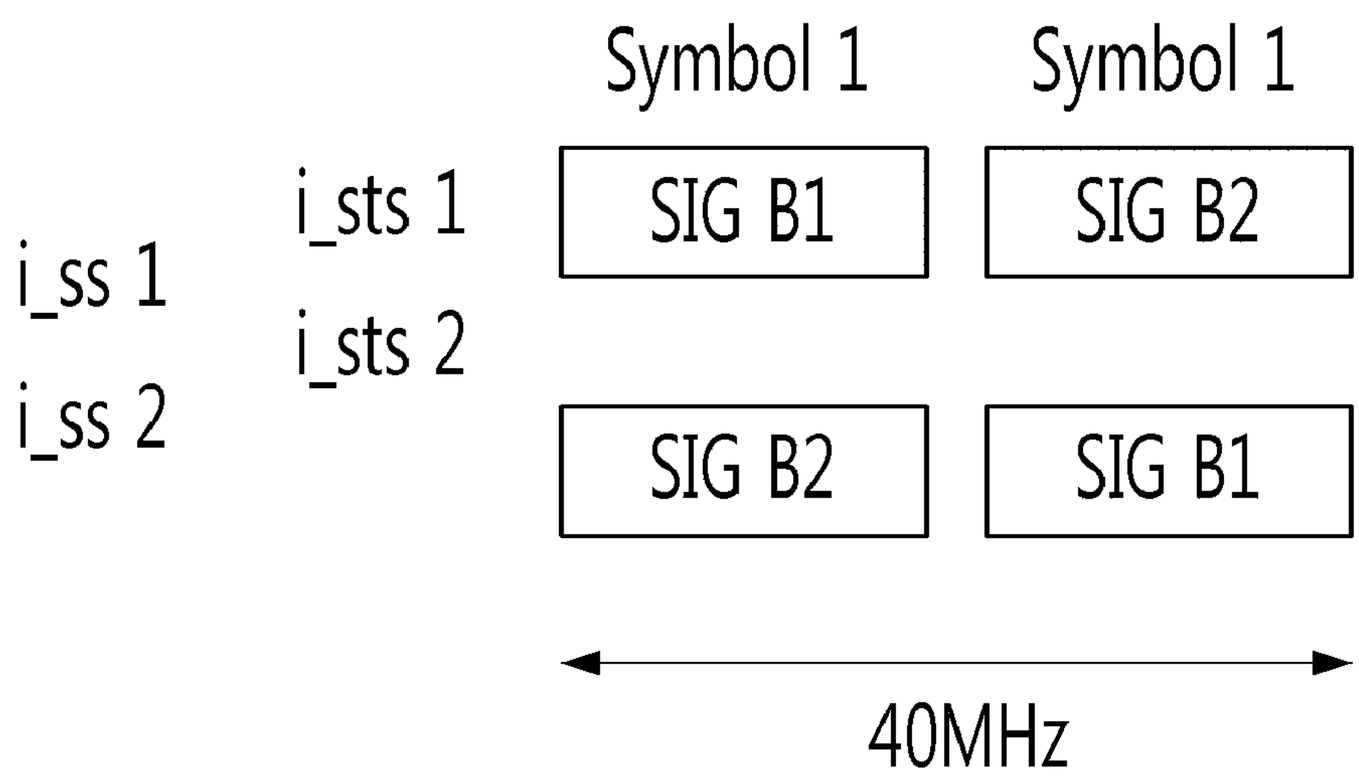
Symbol 1
Symbol 1
i_sts 1
i_ss 1
i_sts 2
i_ss 2
SIG B1
SIG B2
SIG B2
SIG B1
40MHz

FIG. 37

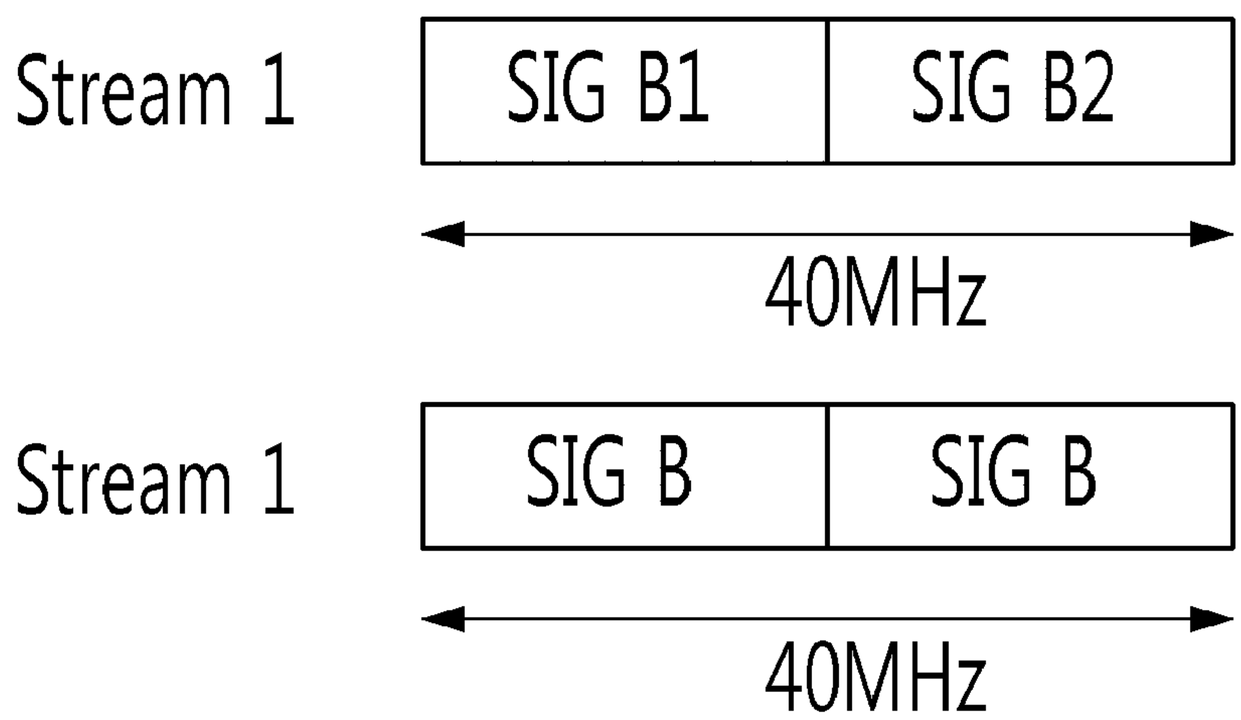

FIG. 38

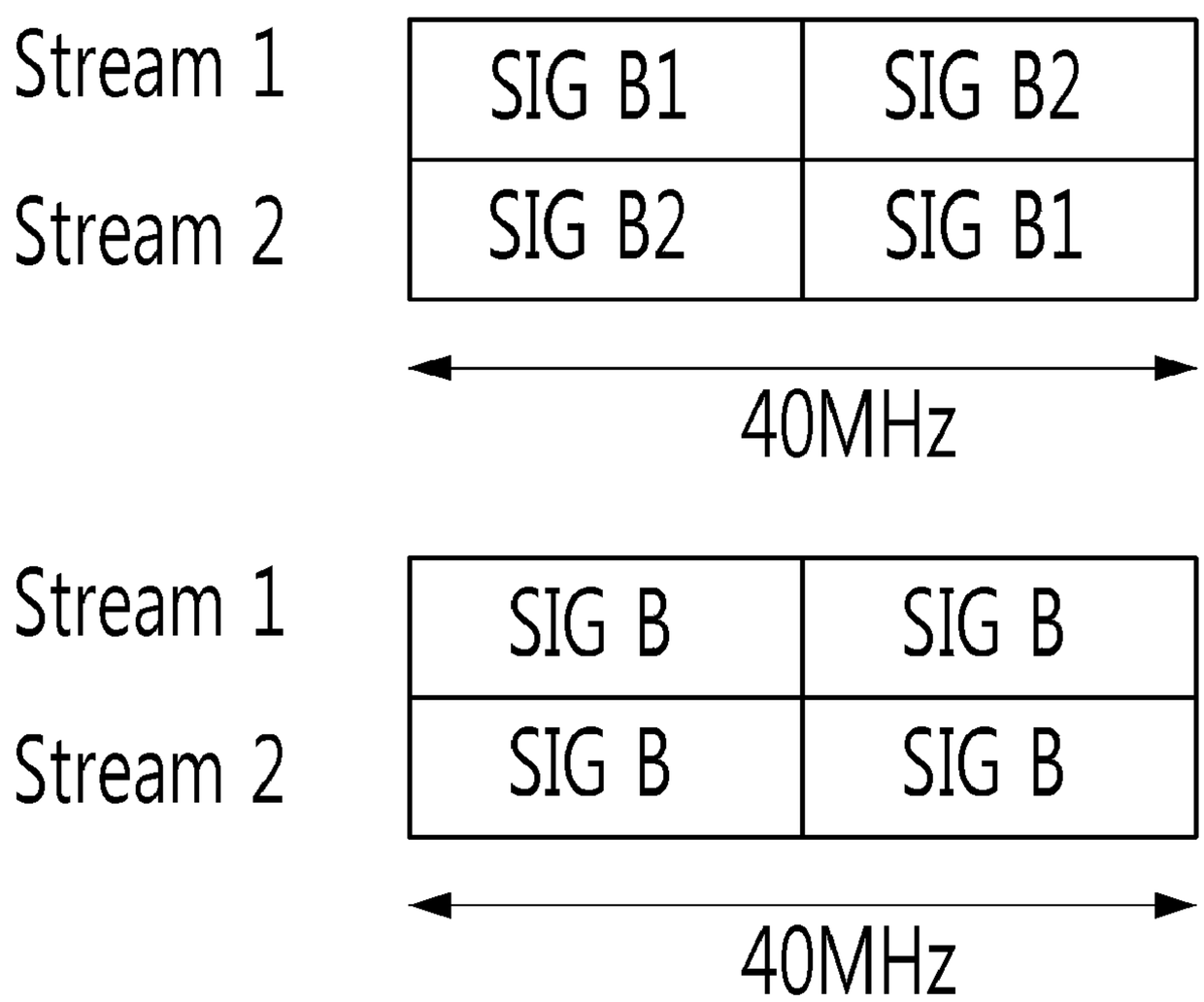
Stream 1
Stream 2
SIG B1
SIG B2
SIG B2
SIG B1
40MHz
Stream 1
Stream 2
SIG B
SIG B
SIG B
SIG B
40MHz

FIG. 39

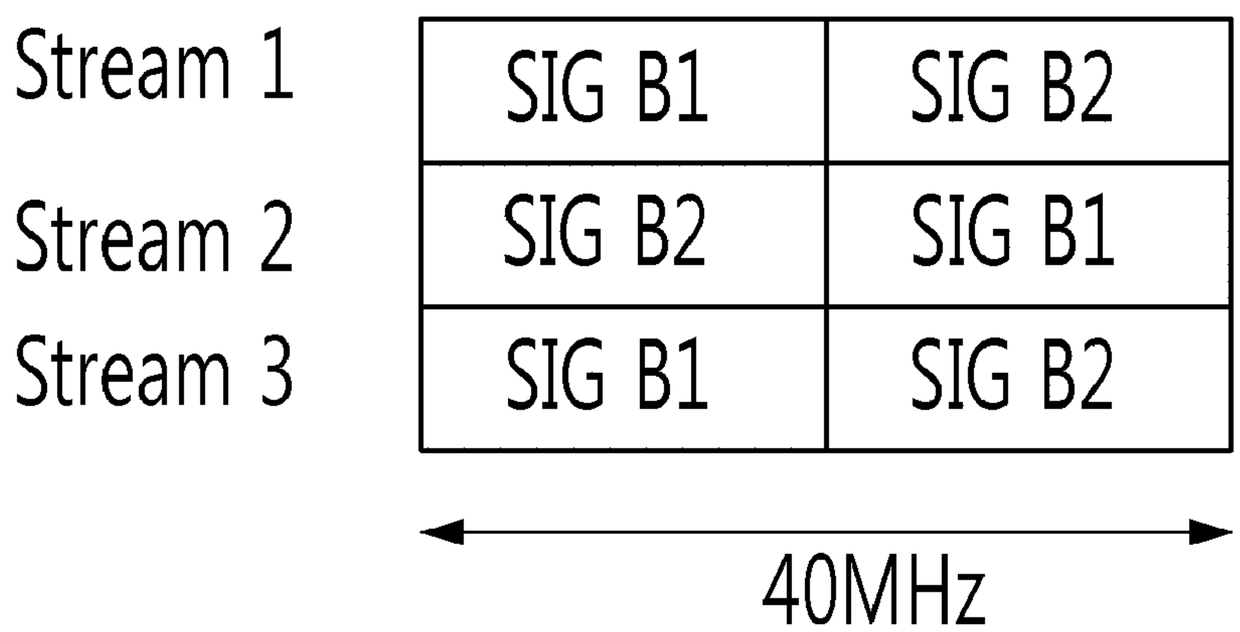
Stream 1
Stream 2
Stream 3
SIG B1
SIG B2
SIG B2
SIG B1
SIG B1
SIG B2
40MHz

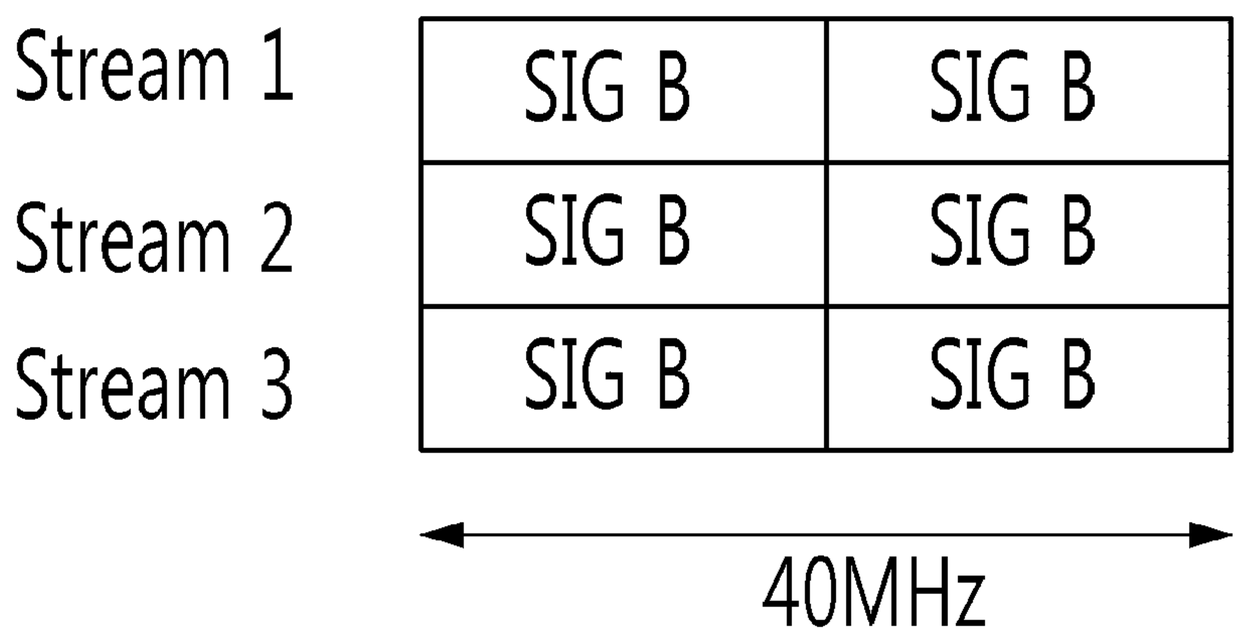
Stream 1
Stream 2
Stream 3
SIG B
SIG B
SIG B
SIG B
SIG B
SIG B
40MHz

FIG. 40

Stream 1	SIG B1	SIG B2
Stream 2	SIG B2	SIG B1
Stream 3	SIG B1	SIG B2
Stream 4	SIG B2	SIG B1

40MHz

Stream 1	SIG B	SIG B
Stream 2	SIG B	SIG B
Stream 3	SIG B	SIG B
Stream 4	SIG B	SIG B

40MHz

FIG. 41

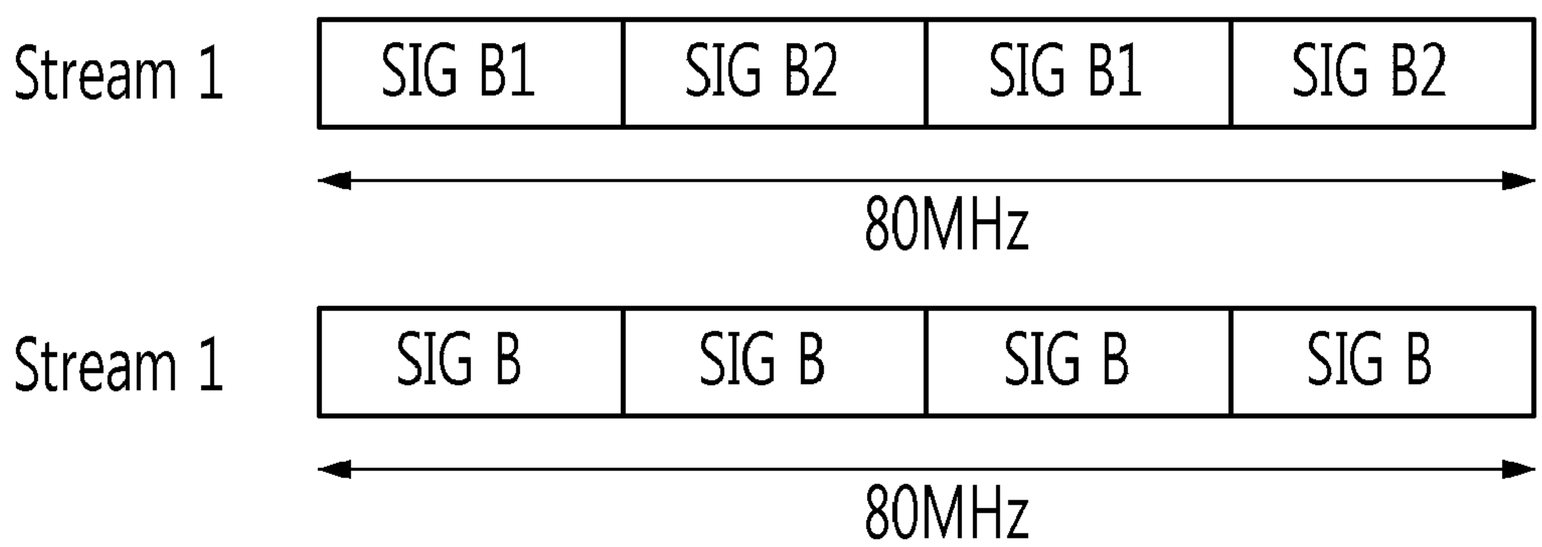
Stream 1
SIG B1
SIG B2
SIG B1
SIG B2
80MHz
Stream 1
SIG B
SIG B
SIG B
SIG B
80MHz

FIG. 42

Stream 1	SIG B1	SIG B2	SIG B1	SIG B2
Stream 2	SIG B2	SIG B1	SIG B2	SIG B1

80MHz

Stream 1	SIG B	SIG B	SIG B	SIG B
Stream 2	SIG B	SIG B	SIG B	SIG B

80MHz

FIG. 43

Stream 1	SIG B1	SIG B2	SIG B1	SIG B2
Stream 2	SIG B2	SIG B1	SIG B2	SIG B1
Stream 3	SIG B1	SIG B2	SIG B1	SIG B2

80MHz

Stream 1	SIG B	SIG B	SIG B	SIG B
Stream 2	SIG B	SIG B	SIG B	SIG B
Stream 3	SIG B	SIG B	SIG B	SIG B

80MHz

FIG. 44

Stream 1	SIG B1	SIG B2	SIG B1	SIG B2
Stream 2	SIG B2	SIG B1	SIG B2	SIG B1
Stream 3	SIG B1	SIG B2	SIG B1	SIG B2
Stream 4	SIG B2	SIG B1	SIG B2	SIG B1

80MHz

Stream 1	SIG B	SIG B	SIG B	SIG B
Stream 2	SIG B	SIG B	SIG B	SIG B
Stream 3	SIG B	SIG B	SIG B	SIG B
Stream 4	SIG B	SIG B	SIG B	SIG B

80MHz

FIG. 45

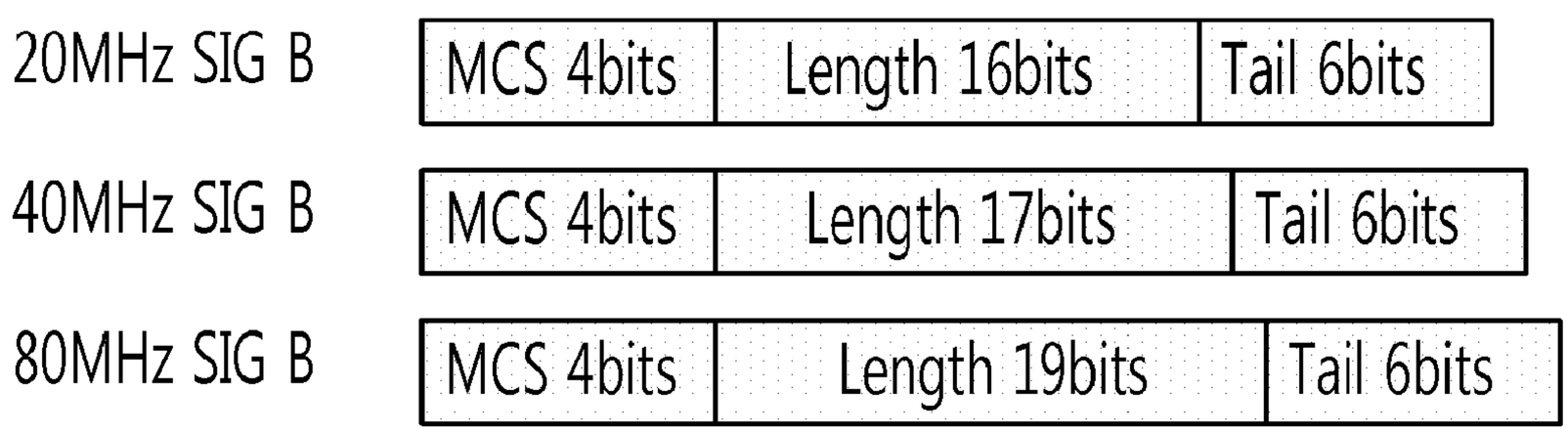
20MHz SIG B
MCS 4bits
Length 16bits
Tail 6bits
40MHz SIG B
MCS 4bits
Length 17bits
Tail 6bits
80MHz SIG B
MCS 4bits
Length 19bits
Tail 6bits

FIG. 46

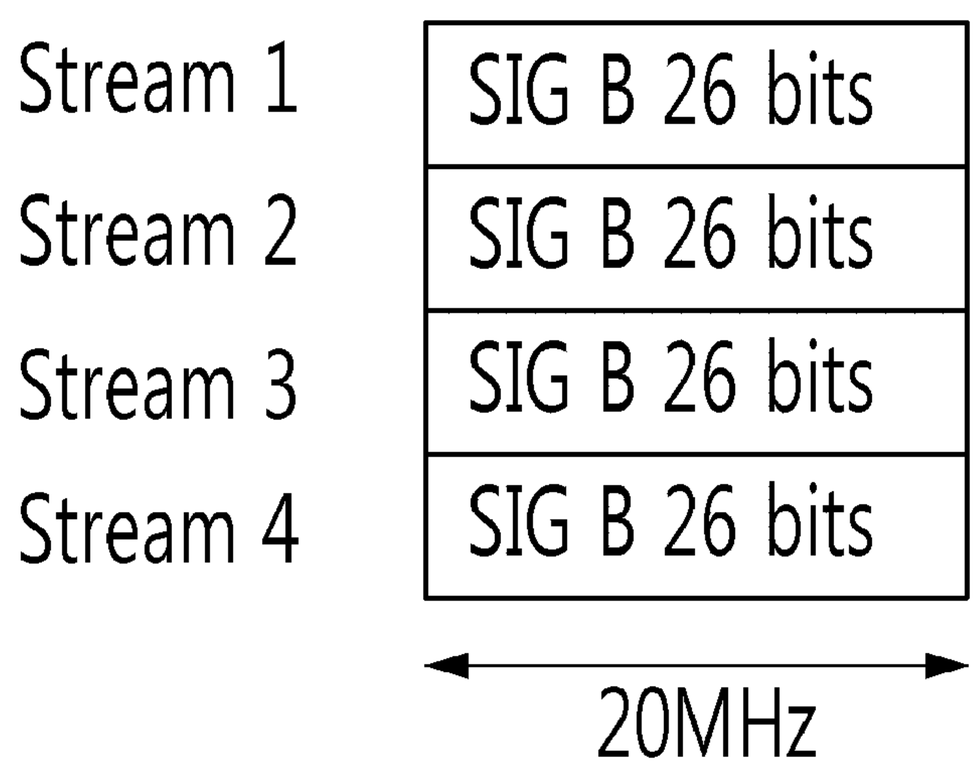
Stream 1
Stream 2
Stream 3
Stream 4
SIG B 26 bits
SIG B 26 bits
SIG B 26 bits
SIG B 26 bits
20MHz

FIG. 47

Stream 1	SIG B 27 bits	SIG B 27 bits
Stream 2	SIG B 27 bits	SIG B 27 bits
Stream 3	SIG B 27 bits	SIG B 27 bits
Stream 4	SIG B 27 bits	SIG B 27 bits

40MHz

FIG. 48

Stream 1	SIG B 29 bits	SIG B 29 bits	SIG B 29 bits	SIG B 29 bits	PAD 1bits
Stream 2	SIG B 29 bits	SIG B 29 bits	SIG B 29 bits	SIG B 29 bits	PAD 1bits
Stream 3	SIG B 29 bits	SIG B 29 bits	SIG B 29 bits	SIG B 29 bits	PAD 1bits
Stream 4	SIG B 29 bits	SIG B 29 bits	SIG B 29 bits	SIG B 29 bits	PAD 1bits

80MHz

FIG. 49

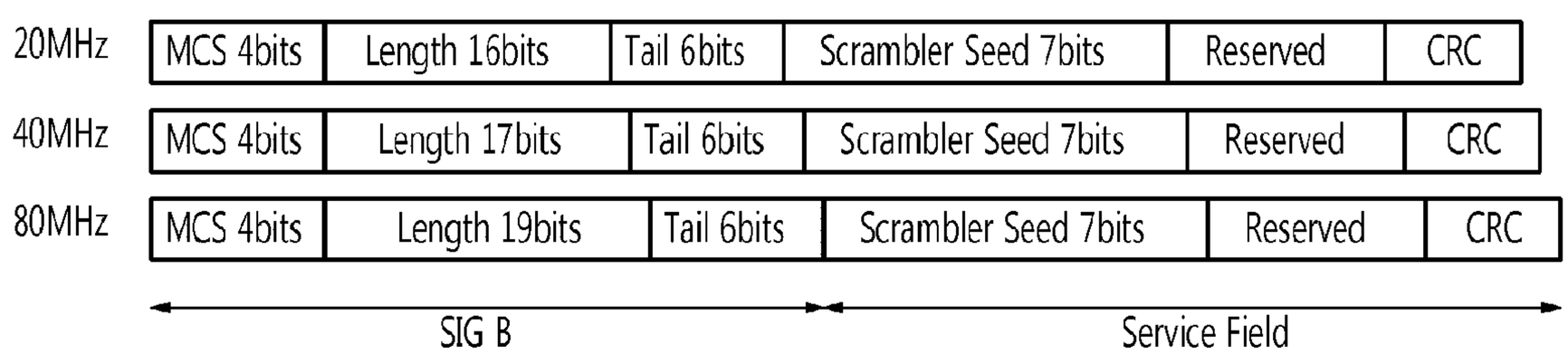
20MHz
MCS 4bits
Length 16bits
Tail 6bits
Scrambler Seed 7bits
Reserved
CRC
40MHz
MCS 4bits
Length 17bits
Tail 6bits
Scrambler Seed 7bits
Reserved
CRC
80MHz
MCS 4bits
Length 19bits
Tail 6bits
Scrambler Seed 7bits
Reserved
CRC
SIG B
Service Field

FIG. 50

20MHz SIG B	Length 17bits	Res. 3bits	Tail 6bits
40MHz SIG B	Length 19bits	Res. 2bits	Tail 6bits
80MHz SIG B	Length 21bits	Res. 2bits	Tail 6bits

FIG. 51

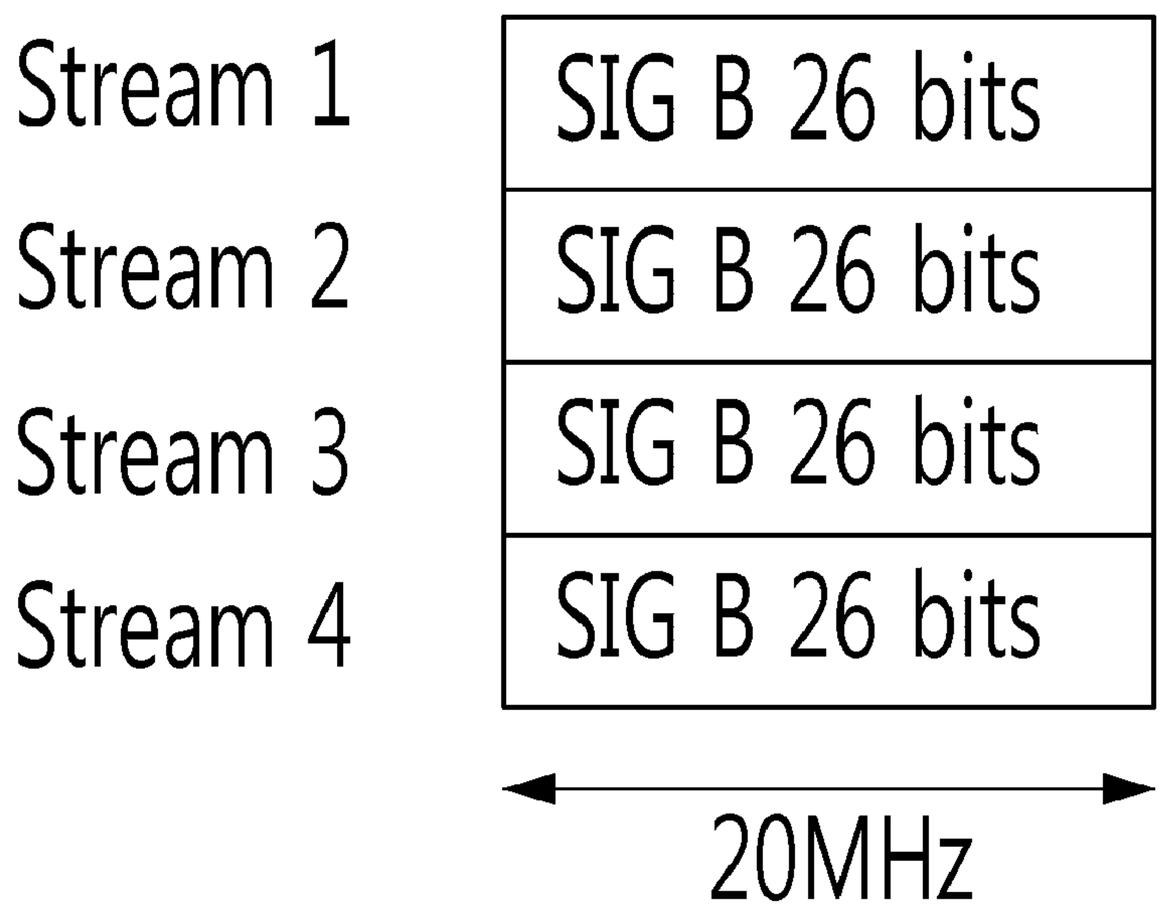
Stream 1
Stream 2
Stream 3
Stream 4
SIG B 26 bits
SIG B 26 bits
SIG B 26 bits
SIG B 26 bits
20MHz

FIG. 52

Stream 1	SIG B 27 bits	SIG B 27 bits
Stream 2	SIG B 27 bits	SIG B 27 bits
Stream 3	SIG B 27 bits	SIG B 27 bits
Stream 4	SIG B 27 bits	SIG B 27 bits

40MHz

FIG. 53

Stream 1	SIG B 29 bits	SIG B 29 bits	SIG B 29 bits	SIG B 29 bits	PAD 1bits
Stream 2	SIG B 29 bits	SIG B 29 bits	SIG B 29 bits	SIG B 29 bits	PAD 1bits
Stream 3	SIG B 29 bits	SIG B 29 bits	SIG B 29 bits	SIG B 29 bits	PAD 1bits
Stream 4	SIG B 29 bits	SIG B 29 bits	SIG B 29 bits	SIG B 29 bits	PAD 1bits

80MHz

FIG. 54

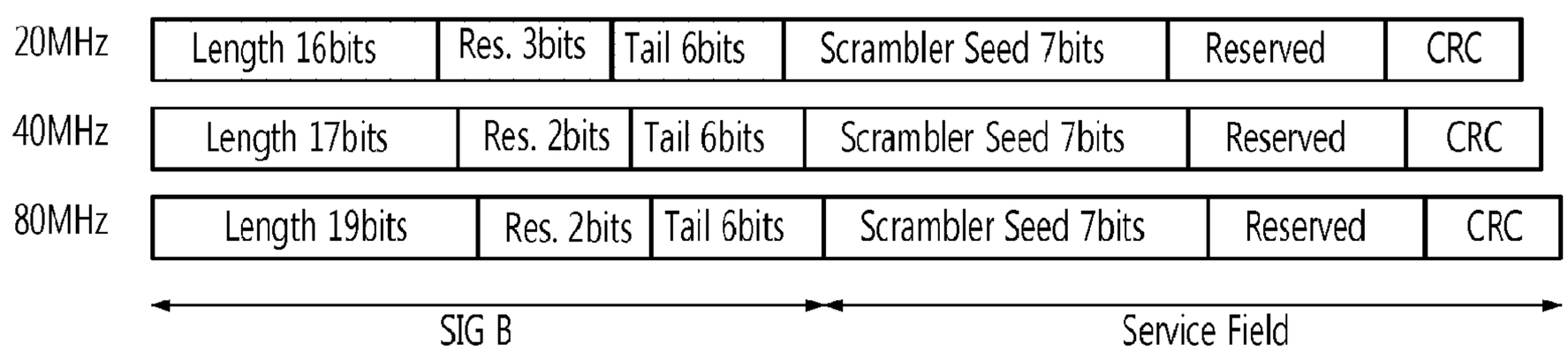
20MHz
Length 16bits
Res. 3bits
Tail 6bits
Scrambler Seed 7bits
Reserved
CRC
40MHz
Length 17bits
Res. 2bits
Tail 6bits
Scrambler Seed 7bits
Reserved
CRC
80MHz
Length 19bits
Res. 2bits
Tail 6bits
Scrambler Seed 7bits
Reserved
CRC
SIG B
Service Field

FIG. 55

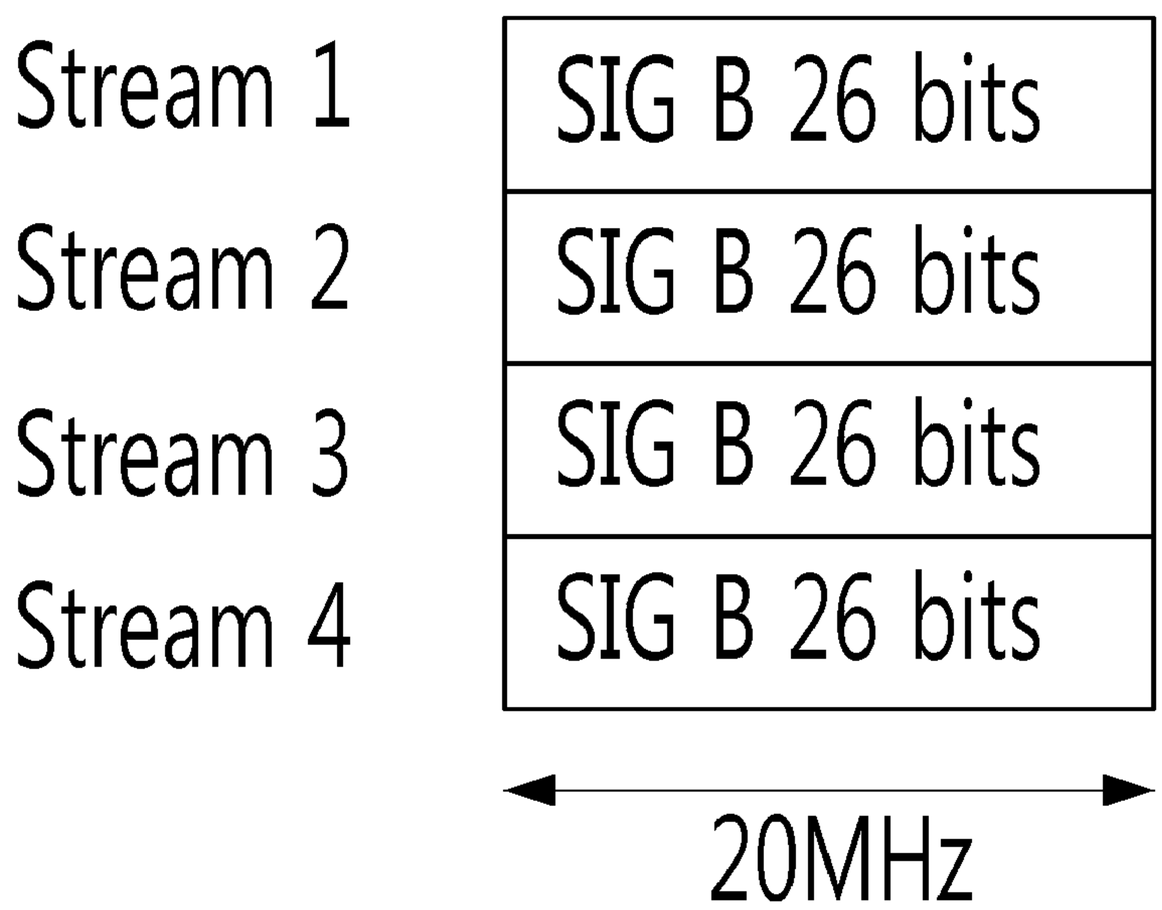
Stream 1
Stream 2
Stream 3
Stream 4
SIG B 26 bits
SIG B 26 bits
SIG B 26 bits
SIG B 26 bits
20MHz

FIG. 56

Stream 1	SIG B 27 bits	SIG B 27 bits
Stream 2	SIG B 27 bits	SIG B 27 bits
Stream 3	SIG B 27 bits	SIG B 27 bits
Stream 4	SIG B 27 bits	SIG B 27 bits

40MHz

FIG. 57

Stream 1	SIG B 29 bits	SIG B 29 bits	SIG B 29 bits	SIG B 29 bits	PAD 1bits
Stream 2	SIG B 29 bits	SIG B 29 bits	SIG B 29 bits	SIG B 29 bits	PAD 1bits
Stream 3	SIG B 29 bits	SIG B 29 bits	SIG B 29 bits	SIG B 29 bits	PAD 1bits
Stream 4	SIG B 29 bits	SIG B 29 bits	SIG B 29 bits	SIG B 29 bits	PAD 1bits

80MHz

FIG. 58

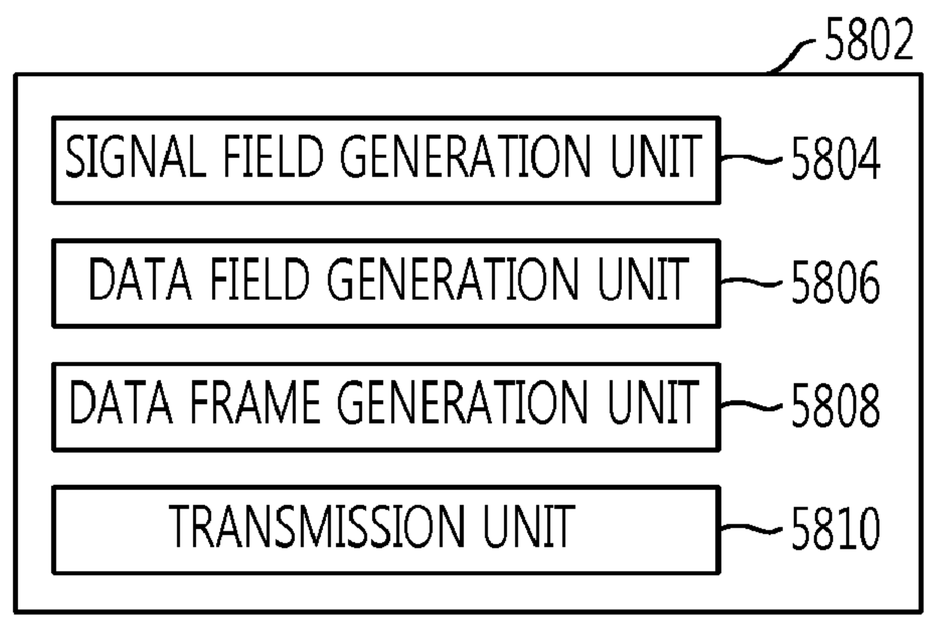
5802
SIGNAL FIELD GENERATION UNIT
5804
DATA FIELD GENERATION UNIT
5806
DATA FRAME GENERATION UNIT
5808
TRANSMISSION UNIT
5810

FIG. 59

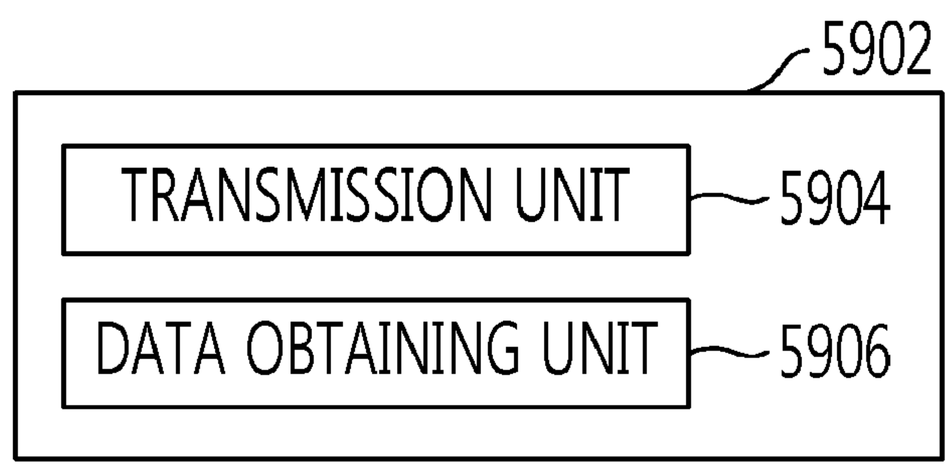

FIG. 60

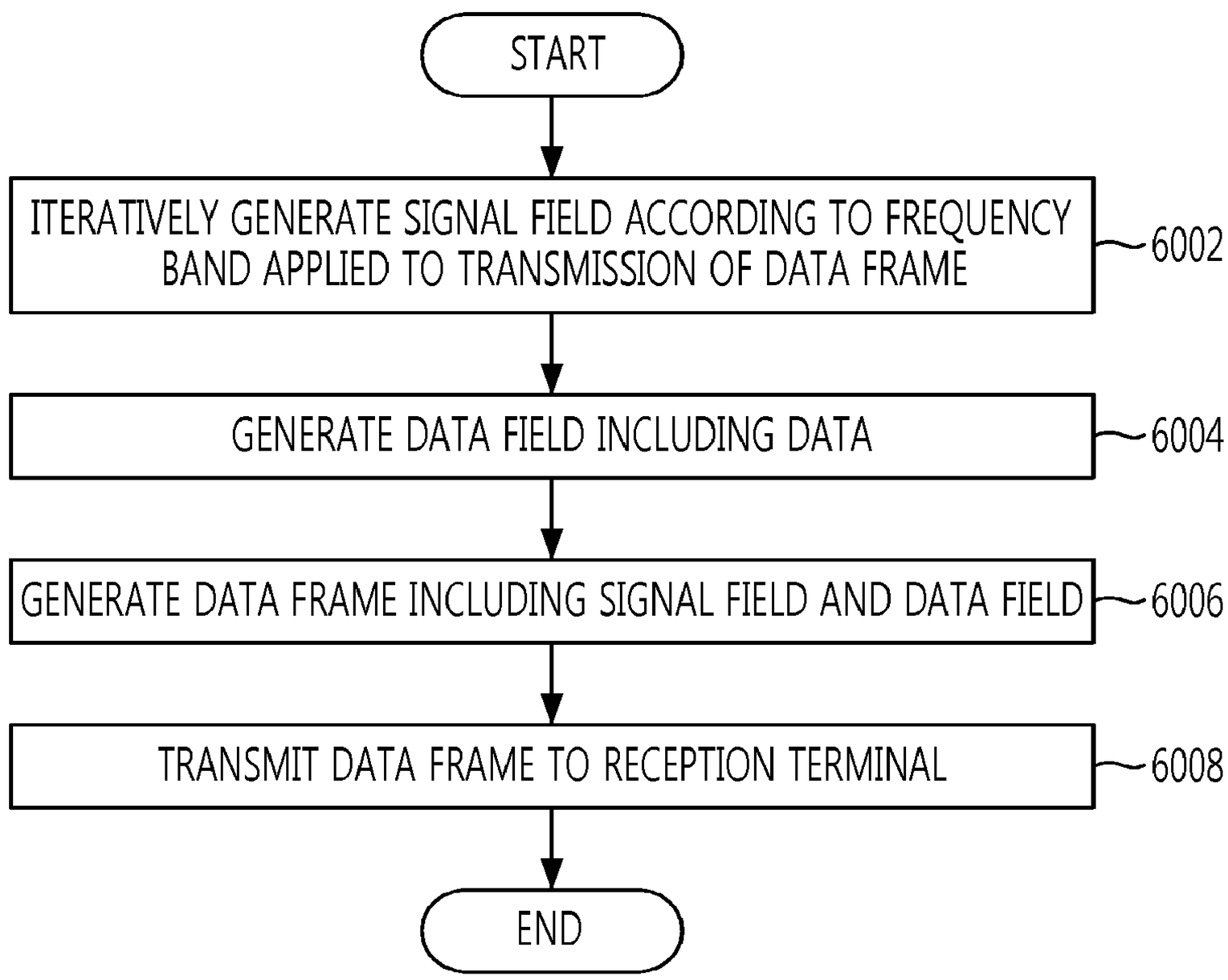
START
ITERATIVELY GENERATE SIGNAL FIELD ACCORDING TO FREQUENCY BAND APPLIED TO TRANSMISSION OF DATA FRAME
6002
GENERATE DATA FIELD INCLUDING DATA
6004
GENERATE DATA FRAME INCLUDING SIGNAL FIELD AND DATA FIELD
6006
TRANSMIT DATA FRAME TO RECEPTION TERMINAL
6008
END

FIG. 61

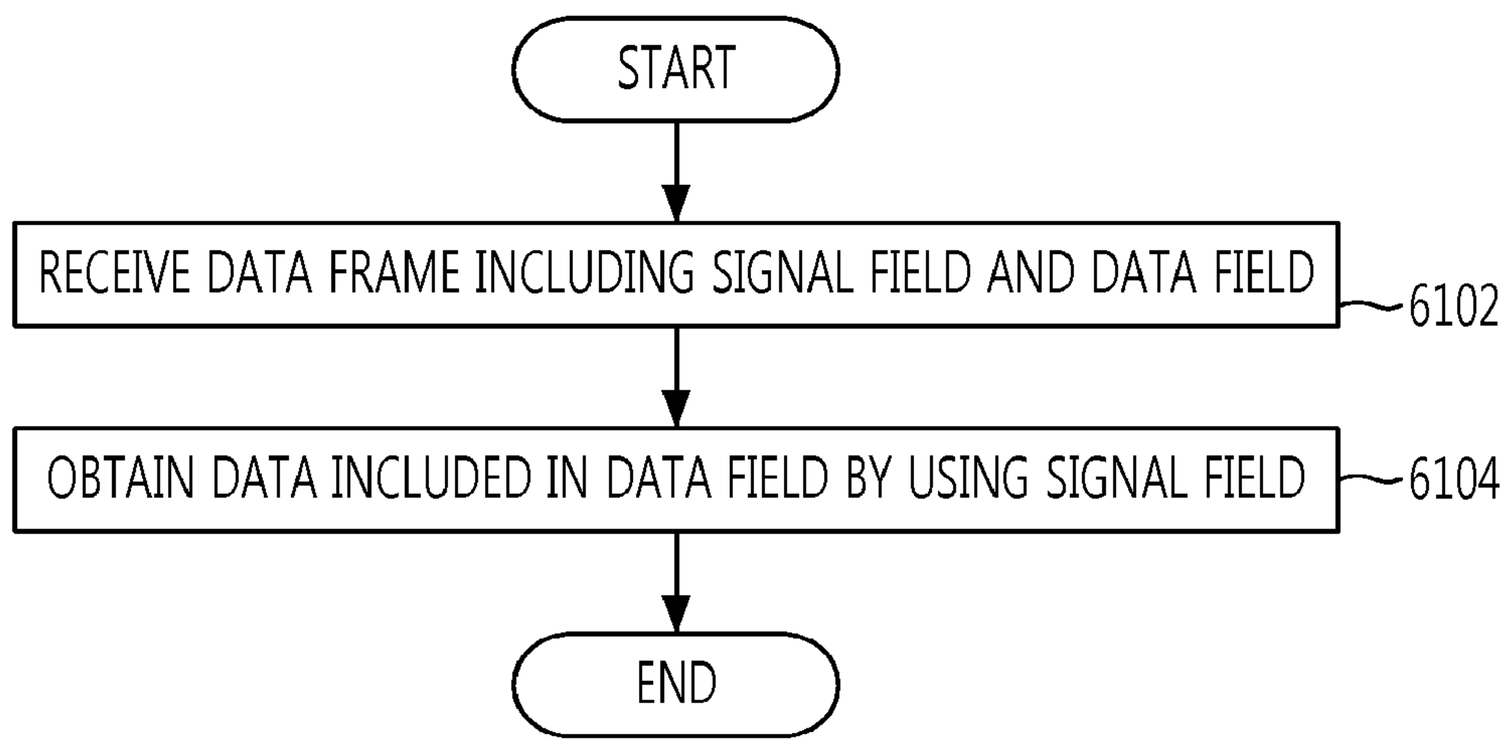
START
RECEIVE DATA FRAME INCLUDING SIGNAL FIELD AND DATA FIELD
6102
OBTAIN DATA INCLUDED IN DATA FIELD BY USING SIGNAL FIELD
6104
END

METHOD AND APPARATUS FOR TRANSMITTING AND RECEIVING DATA IN A MIMO SYSTEM

CROSS-REFERENCES

The present application is a continuation of U.S. application Ser. No. 13/434,681, filed on Mar. 29, 2012, which is a continuation of PCT/KR2011/001742, filed on Mar. 11, 2011, which claims priority of Korean Patent Application No. 10-2010-0072506, filed on Jul. 27, 2010, Korean Patent Application No. 10-2010-0068167, filed on Jul. 14, 2010, Korean Patent Application No. 10-2010-0066458, filed on Jul. 9, 2010, Korean Patent Application No. 10-2010-0065898, filed on Jul. 8, 2010, Korean Patent Application No. 10-2010-0022122, filed on Mar. 12, 2010, which are incorporated herein by reference in their entirety.

TECHNICAL FIELD

The present invention relates to a method and apparatus for transmitting and receiving data and, more particularly, to a method and apparatus for transmitting and receiving data in a multiple input multiple output (MIMO) system.

BACKGROUND ART

A wireless local area network (WLAN) basically supports a basic service set (BSS) mode including an access point (AP) serving as a connection point of a distribution system (DS) and a plurality of stations (STAs), however, not APs, or an independent BSS (IBSS) mode including only stations (STAs) (hereinafter, AP and STA will be referred to as a 'terminal').

In a wireless communication system using multiple antennas, i.e., a MIMO system, a channel capacity is increased according to an increase in the number of antennas, and frequency efficiency can be enhanced accordingly. The MIMO system may be classified into the following two types of systems: a first one is a single user (SU)-MIMO, in which multiple streams are transmitted only to a single user, and a second one is a multi-user (MU)-MIMO in which multiple streams are transmitted to multiple users by canceling interference between users by an AP.

The MU-MIMO is advantageous in that it can obtain even a multi-user diversity gain along with the increase in channel capacity. Also, the MU-MIMO scheme can simultaneously transmit multiple streams to multiple users by using the same frequency band, increasing throughput in comparison to an existing communication scheme. In general, throughput of the wireless communication system can be increased by increasing the frequency band, but a system cost is disadvantageously increased according to the increase in the frequency band. Meanwhile, the MU-MIMO scheme does not increase the frequency band but its complexity is drastically increased in comparison to the existing communication scheme. Thus, in the standard such as 802.11ac, methods for simultaneously employing the MU-MIMO technique while using a variable frequency according to a surrounding situation have been researched.

In the wireless communication system in which multiple antenna streams are simultaneously transmitted to several users while using a variable frequency band, a data field and a signal field including information regarding the corresponding data field are transmitted. The signal field is divided into the following two types of fields. The first is a common signal field including information commonly applied to users. The second is a dedicated signal field including information individually applied to each user. The common signal field may be recognized by every user who belongs to a common user group or who may not belong to the common user group. Also, the common signal field is used for auto-detection for discriminating by which communication system a transmitted data frame has been generated (namely, it is used for auto-detection for discriminating a communication system by which a transmitted data frame was generated), so that, the common signal field is required to have compatibility. Thus, there is a limitation in changing the format or the configuration of the common signal field.

The common signal field is transmitted through a simple iterative structure to an SNR gain and a frequency diversity gain. However, the dedicated signal field cannot obtain both the SNR gain and the frequency diversity gain although such a simple iterative structure as that of the common signal field is used.

DISCLOSURE

Technical Problem

The present invention provides a method and apparatus for effectively transmitting a signal field which is transmitted together when a transmission terminal transmits data to a reception terminal in a multiple input multiple output (MIMO) system.

The foregoing and other objects, features, aspects and advantages of the present invention will be understood and become more apparent from the following detailed description of the present invention. Also, it can be easily understood that the objects and advantages of the present invention can be realized by the units and combinations thereof recited in the claims.

Technical Solution

In an aspect, a method for transmitting data by a transmission terminal to a reception terminal in a multiple input multiple output (MIMO) system using a variable frequency band includes iteratively generating a signal field according to a frequency band applied to transmission of a data frame, generating a data field including the data, generating a data frame including the signal field and the data field, and transmitting the data frame to the reception terminal.

In another aspect, a method for receiving data by a reception terminal from a transmission terminal in a multiple input multiple output (MIMO) system using a variable frequency band includes receiving a data frame including a signal field and a data field, and obtaining the data included in the data field by using the signal field, wherein the signal field is iteratively included in the signal field according to a frequency band applied to transmission of the data frame.

In another aspect, a transmission device transmitting data to a reception terminal in a multiple input multiple output (MIMO) system using a variable frequency band includes a signal field generation unit iteratively generating a signal field according to a frequency band applied to transmission of a data frame, a data field generation unit generating a data field including the data, a data frame generation unit generating a data frame including the signal field and the data field, and a transmission unit transmitting the data frame to the reception terminal.

In another aspect, a reception device receiving data from a transmission terminal in a multiple input multiple output

(MIMO) system using a variable frequency band includes a reception unit receiving a data frame including a signal field and a data field, and a data obtaining unit obtaining the data included in the data field by using the signal field, wherein the signal field is iteratively included in the signal field according to a frequency band applied to transmission of the data frame.

Advantageous Effects

According to embodiments of the present invention, a signal field, which is transmitted together when a transmission terminal transmits data to a reception terminal in a MIMO system, can be effectively transmitted.

Also, in transmitting a dedicated signal field in the MU-MIMO system, the performance of the signal field is enhanced and a transmission time is reduced by utilizing a user's frequency band and the number of streams, whereby a large amount of information can be effectively transmitted by using the signal field.

DESCRIPTION OF DRAWINGS

FIG. **1** shows the structure of a data frame used in a data transmission/reception method according to an embodiment of the present invention.

FIG. **2** shows an embodiment in which an access point (AP) transmits four streams through MU-MIMO beamforming by using four antennas in an 80 MHz frequency band and two stations (STA) receive the streams by using two antennas, respectively.

FIG. **3** shows the structure of a VHT-SIG B field when a station (STA) receives one stream in a 20 MHz frequency band.

FIG. **4** shows the structure of a VHT-SIG B field when a station (STA) receives four streams in a 20 MHz frequency band.

FIG. **5** shows the structure of a VHT-SIG B field when a station (STA) receives four streams in an 80 MHz frequency band.

FIG. **6** shows the structure of a VHT-SIG B field having two symbols when a station (STA) receives one stream in a 20 MHz frequency band.

FIG. **7** shows the structure of a VHT-SIG B field having two symbols when a station (STA) receives four streams in a 20 MHz frequency band.

FIG. **8** shows the structure of a VHT-SIG B field having one symbol when a station (STA) receives four streams in a 20 MHz frequency band.

FIG. **9** shows an embodiment in which SIG Bs are transmitted over two symbols in a similar manner to that of a VHT-SIG A when a station (STA) receives one stream in a 40 MHz frequency band.

FIG. **10** shows the structure of a VHT-SIG B field having one symbol when a station (STA) receives one stream in a 40 MHz frequency band.

FIG. **11** shows an embodiment of applying a data transmission method according to the present invention to a case in which a station (STA) receives two streams in a 20 MHz frequency band.

FIG. **12** shows an embodiment of applying the data transmission method according to the present invention to a case in which a station (STA) receives three streams in a 20 MHz frequency band.

FIG. **13** shows an embodiment of applying the data transmission method according to the present invention to a case in which a station (STA) receives four streams in a 20 MHz frequency band.

FIG. **14** shows an embodiment of applying the data transmission method according to the present invention to a case in which a station (STA) receives one stream in a 40 MHz frequency band.

FIG. **15** shows an embodiment of applying the data transmission method according to the present invention to a case in which a station (STA) receives two streams in a 40 MHz frequency band.

FIG. **16** shows an embodiment of applying the data transmission method according to the present invention to a case in which a station (STA) receives three streams in a 40 MHz frequency band.

FIG. **17** shows an embodiment of applying the data transmission method according to the present invention to a case in which a station (STA) receives one stream in an 80 MHz frequency band.

FIG. **18** shows an embodiment of applying the data transmission method according to the present invention to a case in which a station (STA) receives two streams in an 80 MHz frequency band.

FIG. **19** shows an embodiment of applying the data transmission method according to the present invention to a case in which a station (STA) receives three streams in an 80 MHz frequency band.

FIG. **20** shows an embodiment of applying the data transmission method according to the present invention to a case in which a station (STA) receives four streams in an 80 MHz frequency band.

FIG. **21** shows an embodiment of applying the data transmission method according to the present invention to a case in which a station receives one stream in a 160 MHz frequency band.

FIG. **22** shows an embodiment of applying the data transmission method according to the present invention to a case in which a station receives two streams in a 160 MHz frequency band.

FIG. **23** shows an embodiment of applying the data transmission method according to the present invention to a case in which a station receives three streams in a 160 MHz frequency band.

FIG. **24** shows an embodiment of applying the data transmission method according to the present invention to a case in which a station receives four streams in a 160 MHz frequency band.

FIG. **25** shows an embodiment of applying the data transmission method according to the present invention to a case in which data is transmitted via two non-contiguous multi-channels in an 80 MHz frequency band.

FIG. **26** shows an embodiment of applying the data transmission method according to the present invention to a case in which data is transmitted via three non-contiguous multi-channels in an 80 MHz frequency band.

FIG. **27** shows an embodiment of applying the data transmission method according to the present invention to a case in which data is transmitted by using one QPSK symbol in a 20 MHz frequency band.

FIG. **28** shows an embodiment of applying the data transmission method according to the present invention to a case in which data is transmitted by using one QPSK symbol in a 40 MHz frequency band.

FIG. **29** shows an embodiment of applying the data transmission method according to the present invention to a case in which data is transmitted by using one QPSK symbol in an 80 MHz frequency band.

FIG. **30** shows an embodiment of applying the data transmission method according to the present invention to a

case in which data is transmitted via two non-contiguous multi-channels by using one QPSK symbol in an 80 MHz frequency band.

FIG. **31** shows an embodiment of applying the data transmission method according to the present invention to a case in which data is transmitted via three non-contiguous multi-channels by using one QPSK symbol in an 80 MHz frequency band.

FIG. **32** shows an embodiment of applying the data transmission method according to the present invention to a case in which a first stream is transmitted by using two space-time streams and a second stream is transmitted as it is in a 20 MHz frequency band.

FIG. **33** shows an embodiment of applying the data transmission method according to the present invention to a case in which a first stream is transmitted by using two space-time streams and a second stream is transmitted as it is in a 40 MHz frequency band.

FIG. **34** shows an embodiment of applying the data transmission method according to the present invention to a case in which one stream is transmitted by using two space-time streams in a 20 MHz frequency band.

FIG. **35** shows an embodiment of applying the data transmission method according to the present invention to a case in which a first stream is transmitted by using two space-time streams and a second stream is transmitted as it is in a 20 MHz frequency band.

FIG. **36** shows an embodiment of applying the data transmission method according to the present invention to a case in which a first stream is transmitted by using two space-time streams and a second stream is transmitted as it is in a 40 MHz frequency band.

FIG. **37** shows an embodiment of applying the data transmission method according to the present invention to a case in which a station (STA) receives one stream in a 40 MHz frequency band.

FIG. **38** shows an embodiment of applying a data transmission method according to the present invention to a case in which a station (STA) receives two streams in a 40 MHz frequency band.

FIG. **39** shows an embodiment of applying the data transmission method according to the present invention to a case in which a station (STA) receives three streams in a 40 MHz frequency band.

FIG. **40** shows an embodiment of applying the data transmission method according to the present invention to a case in which a station (STA) receives four streams in a 40 MHz frequency band.

FIG. **41** shows an embodiment of applying the data transmission method according to the present invention to a case in which a station (STA) receives one stream in an 80 MHz frequency band.

FIG. **42** shows an embodiment of applying the data transmission method according to the present invention to a case in which a station (STA) receives two streams in an 80 MHz frequency band.

FIG. **43** shows an embodiment of applying the data transmission method according to the present invention to a case in which a station (STA) receives three streams in an 80 MHz frequency band.

FIG. **44** shows an embodiment of applying the data transmission method according to the present invention to a case in which a station (STA) receives four streams in an 80 MHz frequency band.

FIG. **45** shows a bit allocation of a VHT-SIG B when the VHT-SIG B has a length of 26 bits in a 20 MHz band, has a length of 27 bits in a 40 MHz band, and has a length of 29 bits in an 80 MHz band.

FIG. **46** shows an embodiment of applying the data transmission method according to the present invention to a case in which a station (STA) receives four streams in a 20 MHz frequency band, when the numbers of bits of the VHT-SIG B are allocated as shown in FIG. **45**.

FIG. **47** shows an embodiment of applying the data transmission method according to the present invention to a case in which a station (STA) receives four streams in a 40 MHz frequency band, when the numbers of bits of the VHT-SIG B are allocated as shown in FIG. **45**.

FIG. **48** shows an embodiment of applying the data transmission method according to the present invention to a case in which a station (STA) receives four streams in an 80 MHz frequency band, when the numbers of bits of the VHT-SIG B are allocated as shown in FIG. **45**.

FIG. **49** shows an embodiment in which the VHT-SIG B has a length of 26 bits in a 20 MHz band, 27 bits in a 40 MHz band, and 29 bits in an 80 MHz band, and some of the reserved bits included in a service field are used as CRC bits.

FIG. **50** shows a bit allocation of the VHT-SIG B when the VHT-SIG B has a length of 26 bits in a 20 MHz band, 27 bits in a 40 MHz band, and 29 bits in a 80 MHz band in SU-MIMO.

FIG. **51** shows an embodiment of applying the data transmission method according to the present invention to a case in which a station (STA) receives four streams in a 20 MHz frequency band, when the numbers of bits of the VHT-SIG B are allocated as shown in FIG. **50**.

FIG. **52** shows an embodiment of applying the data transmission method according to the present invention to a case in which a station (STA) receives four streams in a 40 MHz frequency band, when the numbers of bits of the VHT-SIG B are allocated as shown in FIG. **50**.

FIG. **53** shows an embodiment of applying the data transmission method according to the present invention to a case in which a station (STA) receives four streams in an 80 MHz frequency band, when the numbers of bits of the VHT-SIG B are allocated as shown in FIG. **50**.

FIG. **54** shows an embodiment in which the VHT-SIG B has a length of 26 bits in a 20 MHz band, 27 bits in a 40 MHz band, and 29 bits in an 80 MHz band, and some of the reserved bits included in a service field are used as CRC bits.

FIG. **55** shows an embodiment of applying the data transmission method according to the present invention to a case in which a station (STA) receives four streams in a 20 MHz frequency band, when cyclic delay diversity (CDD) technique is used and different delay is applied to each antenna.

FIG. **56** shows an embodiment of applying the data transmission method according to the present invention to a case in which a station (STA) receives four streams in a 40 MHz frequency band, when a CDD technique is used and different delay is applied to each antenna.

FIG. **57** shows an embodiment of applying the data transmission method according to the present invention to a case in which a station (STA) receives four streams in an 80 MHz frequency band, when a CDD technique is used and different delay is applied to each antenna.

FIG. **58** shows the configuration of a transmission terminal according to an embodiment of the present invention.

FIG. **59** shows the configuration of a reception terminal according to an embodiment of the present invention.

FIG. **60** is a flow chart illustrating an embodiment of a method for transmitting data by a transmission terminal according to an embodiment of the present invention.

FIG. **61** is a flow chart illustrating an embodiment of a method for receiving data by a reception terminal according to an embodiment of the present invention.

MODE FOR INVENTION

The foregoing and other objects, features, aspects and advantages of the present invention will be described in detail in conjunction with the accompanying drawings, and accordingly, a person skilled in the art to which the present invention pertains will easily implement the technical concept of the present invention. In describing the present invention, if a detailed explanation for a related known function or construction is considered to unnecessarily divert the gist of the present invention, such explanation will be omitted but would be understood by those skilled in the art. The embodiments of the present invention will now be described with reference to the accompanying drawings, in which like numbers refer to like elements in the drawings.

FIG. **1** shows the structure of a data frame used in a data transmission/reception method according to an embodiment of the present invention.

In FIG. **1**, L-STF and L-LTF, training fields, and L-SIG, a signal field, are the same as those of a data frame used in an existing 802.11. The frame illustrated in FIG. **1** further includes fields dedicated for high speed wireless communication, i.e., very high throughput (VHT). VHT-STF and VHT-LTF are VHT-dedicated training fields, and VHT-SIG A and VHT-SIG B are VHT-dedicated signal fields.

The data frame of FIG. **1** includes data fields VHT-DATA including data transmitted to several users, respectively. VHT-SIG B includes information regarding each of the data fields. For example, VHT-SIG B may include information regarding the length of useful data included in the VHT-DATA field, information regarding a modulation and coding scheme (MCS) of the VHT-DATA field, and the like. Since the VHT-SIG B field includes information regarding each user, it corresponds to a dedicated signal field. Meanwhile, the VHT-SIG A field is a common signal field transmitted to be recognized by every user.

FIG. **2** shows an embodiment in which an access point (AP) transmits four streams through MU-MIMO beamforming by using four antennas in an 80 MHz frequency band and two stations (STA) receive the streams by using two antennas, respectively.

In the embodiment of FIG. **2**, VHT-SIG A field, a common signal field, is iterated four times so as to be transmitted as one stream, and MU-MIMO is not applied to this transmission. In FIG. **2**, the presence of the L-SIG field in front of VHT-SIG A field is to maintain backward compatibility with existing legacy equipment. A VHT-TF field is used to perform channel estimation in using MU-MIMO beamforming, and may have a resolvable or non-resolvable form.

VHT-SIG A includes common information commonly applied to two stations (STA). Also, VHT-SIG A, having a different structure from a signal field generated in legacy equipment, is used for auto-detection of VHT equipment. Here, VHT-SIG A is simply iteratively transmitted in units of 20 MHz frequency, whereby both an SNR gain and a frequency diversity gain can be obtained.

In comparison, VHT-SIG B, a dedicated-signal field, including information applied to each of the stations STA, is transmitted. Thus, VHT-SIG B is not required to be transmitted by using the simple iterative structure like the VHT-SIG A does. Also, even when VHT-SIG B is transmitted by using the simple iterative structure like VHT-SIG A, VHT-SIG B cannot obtain both an SNR gain and a frequency diversity gain.

In order to solve the problems, the present invention provides a method, apparatus, and a data field configuration capable of enhancing transmission efficiency by using a new method, rather than the simple iterative method like the existing VHT-SIG A field in transmitting the VHG-SIG B field.

FIG. **3** shows a structure of the VHT-SIG B field when a station (STA) receives one stream in a 20 MHz frequency band. Here, the VHT-SIG B (referred to as an 'SIG B', hereinafter) is modulated according to BPSK and has one OFDM symbol. In FIG. **3**, since there is only one SIG B, it may be transmitted as it is.

FIG. **4** shows a structure of the VHT-SIG B field when a station (STA) receives four streams in a 20 MHz frequency band. In the embodiment of FIG. **4**, four SIG Bs are transmitted. Here, in case in which the SIG B is transmitted in a simple iterative manner like the VHT-SIG A, if a channel environment of particular subcarriers of OFDM becomes worse in MU-MIMO beamforming, the iterative four bits are all placed in the same situation. Thus, an SNR gain according to the iteration four times may be obtained, but a frequency diversity effect cannot be obtained.

Thus, in an embodiment of the present invention, different interleaving is applied to the SIG Bs of the stream **1** to stream **4**. When the same bits of a coded codeword of the SIG Bs is included in a different subcarrier of a different stream and transmitted, both the SNR gain and the frequency diversity gain can be obtained, improving transmission performance.

FIG. **5** shows a structure of the VHT-SIG B field when a station (STA) receives four streams in an 80 MHz frequency band. In the embodiment of FIG. **5**, although the SIG B is simply iterated in a frequency band, both the SNR gain and the frequency diversity gain can be obtained. Thus, maximum performance can be obtained by simply iterating the scheme applied to the four streams in the embodiment of FIG. **4**.

The method described with reference to FIGS. **4** and **5** may be applied in the same manner to 40 MHz frequency band or 160 MHz band and when the number of streams is two or three.

Meanwhile, information included in the VHT-SIG B field is required to be stably transmitted compared with information included in the VHT-DATA field. Thus, in general, the VHT-SIG B field is transmitted by using a BPSK modulation and a low coding rate, or the like, thus being protected. Thus, the method described with reference to FIGS. **4** and **5** may protect the VHT-SIG B more than necessary.

In the case of VHT-SIG A, it must be necessarily recognized in units of 20 MHz at a receiver (or a receiving end). Thus, the VHT-SIG A must be iteratively transmitted by a corresponding symbol length regardless of the number of symbols. However, iteratively transmitting the VHT-SIG B by a corresponding symbol length may be problematic in terms of the foregoing transmission performance and efficiency.

FIG. **6** shows a structure of the VHT-SIG B field having two symbols when a station (STA) receives one stream in a 20 MHz frequency band. In FIG. **6**, the SIG B is modulated according to BPSK and has two OFDM symbols. Here, since there is only one SIG B, it may be transmitted as it is.

FIG. **7** shows a structure of a VHT-SIG B field having two symbols when a station (STA) receives four streams in a 20

MHz frequency band. Like the embodiment of FIG. **4**, both SNR gain and frequency diversity gain can be obtained by applying different interleaving to streams.

However, if sufficient performance can be obtained without having to iterate the SIG B, the method of FIG. **7** may not be an effective transmission because the SIG B is transmitted over two symbols. Thus, the following transmission method is considered.

FIG. **8** shows a structure of the VHT-SIG B field having one symbol when a station (STA) receives four streams in a 20 MHz frequency band. In the embodiment of FIG. **8**, the SIG B information, which has occupied two symbols when transmitted as one stream in the 20 MHz frequency band, can be effectively transmitted by only one symbol.

When the frequency band applied to a transmission of a data frame extends, a method similar to FIG. **8** may be considered. FIG. **9** shows an embodiment in which SIG Bs are transmitted over two symbols in a similar manner to that of a VHT-SIG A when a station (STA) receives one stream in a 40 MHz frequency band. In the embodiment of FIG. **9**, since SIG Bs are transmitted over two symbols although sufficient performance can be obtained without iterating the SIG B, it is not effective.

FIG. **10** shows a structure of the VHT-SIG B field having one symbol when a station (STA) receives one stream in a 40 MHz frequency band. In this case, the SIG B information, which has occupied two symbols when transmitted as one stream in the 40 MHz frequency band, can be effectively transmitted through one symbol.

In this manner, when the VHT-SIG B has two symbols when transmitted as one stream in the 20 MHz frequency band, even though the number of streams is increased or the frequency band extends, the VHT-SIG B can be effectively transmitted by using one symbol. Also, the foregoing methods may extend as follows.

FIG. **11** shows an embodiment of applying the data transmission method according to the present invention to a case in which a station (STA) receives two streams in a 20 MHz frequency band. FIG. **12** shows an embodiment of applying the data transmission method according to the present invention to a case in which a station (STA) receives three streams in a 20 MHz frequency band. In the embodiment of FIG. **12**, stream **3** is configured of B**1** corresponding to an even number bit of a codeword of the SIG B**1** and B**2** corresponding to an odd number bit of a codeword of SIG B**2**. The stream **3** transmitted thusly may be combined at a receiver.

FIG. **13** shows an embodiment of applying the data transmission method according to the present invention to a case in which a station (STA) receives four streams in a 20 MHz frequency band. In the embodiment of FIG. **13**, SIG B**1** is iterated in streams **1** and **3**, and SIG B**2** is iterated in streams **2** and **4**. In this case, a simple iteration cannot obtain a frequency diversity gain, so different interleaving may be applied to each stream in order to enhance transmission performance as mentioned above.

FIG. **14** shows an embodiment of applying the data transmission method according to the present invention to a case in which a station (STA) receives one stream in a 40 MHz frequency band. FIG. **15** shows an embodiment of applying the data transmission method according to the present invention to a case in which a station (STA) receives two streams in a 40 MHz frequency band. FIG. **16** shows an embodiment of applying the data transmission method according to the present invention to a case in which a station (STA) receives three streams in a 40 MHz frequency band. Different interleaving may be applied to each stream of FIGS. **14**, **15**, and **16**.

FIG. **17** shows an embodiment of applying the data transmission method according to the present invention to a case in which a station (STA) receives one stream in an 80 MHz frequency band. FIG. **18** shows an embodiment of applying the data transmission method according to the present invention to a case in which a station (STA) receives two streams in an 80 MHz frequency band. FIG. **19** shows an embodiment of applying the data transmission method according to the present invention to a case in which a station (STA) receives three streams in an 80 MHz frequency band. FIG. **20** shows an embodiment of applying the data transmission method according to the present invention to a case in which a station (STA) receives four streams in an 80 MHz frequency band. Different interleaving may be applied to each stream of FIGS. **17**, **18**, **19**, and **20**.

FIG. **21** shows an embodiment of applying the data transmission method according to the present invention to a case in which a station (STA) receives one stream in a 160 MHz frequency band. FIG. **22** shows an embodiment of applying the data transmission method according to the present invention to a case in which a station (STA) receives two streams in a 160 MHz frequency band. FIG. **23** shows an embodiment of applying the data transmission method according to the present invention to a case in which a station (STA) receives three streams in a 160 MHz frequency band. FIG. **24** shows an embodiment of applying the data transmission method according to the present invention to a case in which a station (STA) receives four streams in a 160 MHz frequency band. Different interleaving may be applied to each stream of FIGS. **21**, **22**, **23**, and **24**.

The transmission method according to an embodiment of the present invention as described above can be applicable when a data frame is transmitted by using a multi-channel. FIG. **25** shows an embodiment of applying the data transmission method according to the present invention to a case in which data is transmitted via two non-contiguous multi-channels in an 80 MHz frequency band. FIG. **26** shows an embodiment of applying the data transmission method according to the present invention to a case in which data is transmitted via three non-contiguous multi-channels in an 80 MHz frequency band. Different interleaving may be applied to each stream of FIGS. **25** and **26**.

The transmission method according to an embodiment of the present invention as described above can be applicable when the VHT-SIG B field uses one QPSK symbol instead of two BPSK symbols. FIG. **27** shows an embodiment of applying the data transmission method according to the present invention to a case in which data is transmitted by using one QPSK symbol in a 20 MHz frequency band. FIG. **28** shows an embodiment of applying the data transmission method according to the present invention to a case in which data is transmitted by using one QPSK symbol in a 40 MHz frequency band. FIG. **29** shows an embodiment of applying the data transmission method according to the present invention to a case in which data is transmitted by using one QPSK symbol in an 80 MHz frequency band. FIG. **30** shows an embodiment of applying the data transmission method according to the present invention to a case in which data is transmitted via two non-contiguous multi-channels by using one QPSK symbol in an 80 MHz frequency band. FIG. **31** shows an embodiment of applying the data transmission method according to the present invention to a case in which data is transmitted via three non-contiguous multi-channels by using one QPSK symbol in an 80 MHz frequency band.

Different interleaving may be applied to each stream of FIGS. **27**, **28**, **29**, **30**, and **31**.

The transmission method according to an embodiment of the present invention as described above can be applicable when one stream is transmitted as a space-time block code (STBC) (or an Alamouti code) through two antennas. In this case, the VHT-SIG B field may be transmitted as the STBC in the same manner as that of the data field, or the VHT-SIG B field may be transmitted by using one of two space-time streams. In the former case, STBC-related information should be included in the VHT-SIG A in advance and transmitted, and in the latter case, the STBC-related information may be included in the VHT-SIG B and transmitted.

FIG. **32** shows an embodiment of applying the data transmission method according to the present invention to a case in which a first stream is transmitted by using two space-time streams and a second stream is transmitted as it is in a 20 MHz frequency band. FIG. **33** shows an embodiment of applying a data transmission method according to the present invention to a case in which a first stream is transmitted by using two space-time streams and a second stream is transmitted as it is in a 40 MHz frequency band.

FIG. **34** shows an embodiment of applying the data transmission method according to the present invention to a case in which one stream is transmitted by using two space-time streams in a 20 MHz frequency band. FIG. **35** shows an embodiment of applying the data transmission method according to the present invention to a case in which a first stream is transmitted by using two space-time streams and a second stream is transmitted as it is in a 20 MHz frequency band. FIG. **36** shows an embodiment of applying the data transmission method according to the present invention to a case in which a first stream is transmitted by using two space-time streams and a second stream is transmitted as it is in a 40 MHz frequency band. In the embodiment of FIG. **36**, the streams can be effectively transmitted by using one symbol.

The data transmission method according to an embodiment of the present invention as described above may also be applicable when only a portion of a stream is transmitted by using the STBC. The data transmission method according to an embodiment of the present invention as described above may also be applicable when the VHT-SIG B uses three or more OFDM symbols in transmitting one stream in a 20 MHz band.

A data transmission and reception method according to another embodiment of the present invention will now be described.

As described above, in an embodiment of the present invention, a dedicated signal field is iteratively effectively transmitted in a frequency or stream domain, to thus obtain a maximum diversity gain. This method can be applicable to a case in which a frame is transmitted by using channel bonding in a 40 MHz or 80 MHz bandwidth.

When two 20 MHz frequency bands are bonded to form a 40 MHz frequency band, a portion of a frequency tone, which is generally used as a guard band, or the like, can be used as a frequency tone for a data transmission. For example, in the case of 802.11n, the number of data transmission frequency tones in the 20 MHz band is 52, and the number of data transmission frequency tones in the 40 MHz band is 108. Namely, in 802.11n, the use of channel bonding results in an increase in the number of four data transmission frequency tones in the 40 MHz band. Thus, the number of transmission frequency tones can be further increased in an 80 MHz band by using channel bonding based on the same principle.

The foregoing VHT-SIG B field transmission scheme of the present invention can be applicable to a frame transmission using channel bonding. Here, the increased data transmission frequency tones can be used to increase the amount of data included in a signal field or the iteration number of signal fields. Namely, the method according to the present invention can be applicable even to a case in which the number of bits of the SIG B in the 40 MHz band or the 80 MHz band is greater than the number of bits of the SIG B in the 20 MHz band.

FIG. **37** shows an embodiment of applying the data transmission method according to the present invention to a case in which a station (STA) receives one stream in a 40 MHz frequency band. FIG. **38** shows an embodiment of applying the data transmission method according to the present invention to a case in which a station (STA) receives two streams in a 40 MHz frequency band. FIG. **39** shows an embodiment of applying the data transmission method according to the present invention to a case in which a station (STA) receives three streams in a 40 MHz frequency band. FIG. **40** shows an embodiment of applying the data transmission method according to the present invention to a case in which a station (STA) receives four streams in a 40 MHz frequency band. Different interleaving may be applied to each stream of FIGS. **37**, **38**, **39**, and **40**.

FIG. **41** shows an embodiment of applying the data transmission method according to the present invention to a case in which a station (STA) receives one stream in an 80 MHz frequency band. FIG. **42** shows an embodiment of applying the data transmission method according to the present invention to a case in which a station (STA) receives two streams in an 80 MHz frequency band. FIG. **43** shows an embodiment of applying the data transmission method according to the present invention to a case in which a station (STA) receives three streams in an 80 MHz frequency band. FIG. **44** shows an embodiment of applying the data transmission method according to the present invention to a case in which a station (STA) receives four streams in an 80 MHz frequency band. Different interleaving may be applied to each stream of FIGS. **41**, **42**, **43**, and **44**.

When the number of bits of the SIG B and the number of frequency tones used in transmission are not in a mutually multiple relationship, some frequency tones may remain after iterating the SIG B. In this case, a method of iterating only a portion of the SIG B or padding may be used. This method can be applicable when the information of SIG B is increased according to an increase in the frequency bandwidth from 20 MHz to 40 MHz and to 80 MHz.

In general, when the frequency bandwidth is increased, the amount of data transmitted in the same duration is increased. Accordingly, when length information of transmitted data, or the like, is included in the VHT-SIG B and transmitted, the length of the VHT-SIG B itself is increased. In this case, a bit allocation of the VHT-SIG B is changed by frequency bandwidth and the VHT-SIG B may be iterated according to the number of transmittable frequency tones, thus enhancing transmission efficiency. For example, it is assumed that the number of available data tones in a 20 MHz band is 26 bits, the number of available data tones in a 40 MHz band is 54 bits, and the number of available data tones in an 80 MHz band is 117 bits. In this case, the length of the VHT-SIG B is 26 bits in the 20 MHz band, 27 bits in the 40 MHz band, and 29 bits in the 80 MHz band. FIG. **45** shows a bit allocation in this case.

FIG. **46** shows an embodiment of applying the data transmission method according to the present invention to a case in which a station (STA) receives four streams in a 20

MHz frequency band, when the numbers of bits of the VHT-SIG B are allocated as shown in FIG. **45**. FIG. **47** shows an embodiment of applying the data transmission method according to the present invention to a case in which a station (STA) receives four streams in a 40 MHz frequency band, when the numbers of bits of the VHT-SIG B are allocated as shown in FIG. **45**. FIG. **48** shows an embodiment of applying the data transmission method according to the present invention to a case in which a station (STA) receives four streams in an 80 MHz frequency band, when the numbers of bits of the VHT-SIG B are allocated as shown in FIG. **45**. Different interleaving may be applied to each stream of FIGS. **46**, **47**, and **48**. The present invention can be applicable even when the number of transmitted streams is changed in the embodiments of FIGS. **46**, **47**, and **48**.

The bit allocation of VHT-SIG B in FIG. **45** includes tail bits for a convolutional code. However, the VHT-SIG B of FIG. **45** does not include CRC bits for determining whether or not a codeword has an error, making it difficult to obtain reliability of data. However, in the case of 20 MHz band, since there is no extra bit in the VHT-SIG B, some (4 to 8 bits) of the reserved bits included in a service field of a data field may be used as the CRC bit as shown in FIG. **49**.

When the bit allocation as shown in FIG. **49** is used, the CRC is simultaneously applied to the SIG B and a scrambler seed. Thus, CRC calculation with respect to a variable length is required for each frequency band. The VHT-SIG B field uses a low modulations scheme and coding rate (BPSK 1/2), and is available for an iterative coding to frequency and an antenna domain, so it has high reliability. Meanwhile, the service field uses the modulation scheme and coding rate used for transmission of data, as it is, so its reliability is relatively variable and generally has low reliability compared with the VHT-SIG B. In this case, the use of a CRC can detect an error of information included in the VHT-SIG B field and an error of a scrambler seed. Thus, when an error of the scrambler seed is detected, the operation of PHY and MAC layers can be stopped, obtaining an effect of reducing power consumption.

The foregoing method can be applicable to SU-MIMO. In SU-MIMO, the VHT-SIG A may relatively have extra bits. Thus, in SU-MIMO, the MCS bits, which are included in the VHT-SIG B field, can be included in the VHT-SIG A field. In SU-MIMO, the number of antennas in use may be increased, so the number of bits of the field indicating a data length may be increased. FIG. **50** shows a bit allocation of the VHT-SIG B when the VHT-SIG B has a length of 26 bits in a 20 MHz band, 27 bits in a 40 MHz band, and 29 bits in a 80 MHz band in SU-MIMO.

FIG. **51** shows an embodiment of applying a data transmission method according to the present invention to a case in which a station (STA) receives four streams in a 20 MHz frequency band, when the numbers of bits of the VHT-SIG B are allocated as shown in FIG. **50**. FIG. **52** shows an embodiment of applying a data transmission method according to the present invention to a case in which a station (STA) receives four streams in a 40 MHz frequency band, when the numbers of bits of the VHT-SIG B are allocated as shown in FIG. **50**. FIG. **53** shows an embodiment of applying a data transmission method according to the present invention to a case in which a station (STA) receives four streams in an 80 MHz frequency band, when the numbers of bits of the VHT-SIG B are allocated as shown in FIG. **50**. Different interleaving may be applied to each stream of FIGS. **51**, **52**, and **53**. The present invention can be applicable even when the number of transmitted streams is changed in the embodiments of FIGS. **51**, **52**, and **53**.

When the bit allocation of VHT-SIG B field as shown in FIG. **50** is used, the VHT-SIG B field includes tail bits for a convolutional code. However, the VHT-SIG B of FIG. **50** does not include a CRC bits for determining whether or not a codeword has an error, making it difficult to obtain reliability of data. However, in the case of 20 MHz band, since there is no extra bit in the VHT-SIG B, some (4 to 8 bits) of the reserved bits included in a service field of a data field may be used as the CRC bit as shown in FIG. **54**.

When the bit allocation as shown in FIG. **54** is used, the CRC is simultaneously applied to the SIG B and a scrambler seed. Thus, CRC calculation with respect to a variable length is required for each frequency band. The VHT-SIG B field uses a low modulations scheme and coding rate (BPSK 1/2), and is available for an iterative coding to frequency and an antenna domain, so it has high reliability. Meanwhile, the service field uses the modulation scheme and coding rate used for transmission of data, as it is, so its reliability is relatively variable and generally has low reliability compared with the VHT-SIG B. In this case, the use of a CRC can detect an error of information included in the VHT-SIG B field and an error of a scrambler seed. Thus, when an error of the scrambler seed is detected, the operation of PHY and MAC layers can be stopped, obtaining an effect of reducing power consumption.

In the data transmission and reception method according to the present invention as described above, when the VHT-SIG B field is transmitted, different interleaving is applied to the frequency domain with respect to mutually different transmission streams, thereby obtaining a maximum diversity gain even in the antenna domain. In this respect, however, in order to obtain similar effects while slightly reducing the complexity, cyclic delay diversity (CDD) technique may be used to transmit the VHT-SIG B field, without applying different interleaving to each transmission stream. In this case, the same data is transmitted by each transmission antenna, and here, a different delay is applied to each antenna.

FIG. **55** shows an embodiment of applying the data transmission method according to the present invention to a case in which a station (STA) receives four streams in a 20 MHz frequency band, when cyclic delay diversity (CDD) technique is used and different delay is applied to each antenna. FIG. **56** shows an embodiment of applying the data transmission method according to the present invention to a case in which a station (STA) receives four streams in a 40 MHz frequency band, when a CDD technique is used and different delay is applied to each antenna. FIG. **57** shows an embodiment of applying the data transmission method according to the present invention to a case in which a station (STA) receives four streams in an 80 MHz frequency band, when a CDD technique is used and different delay is applied to each antenna. Different delay is applied to each stream of FIGS. **55**, **56**, and **57**. The present invention can be applicable even when the number of transmitted streams is changed in the embodiments of FIGS. **55**, **56**, and **57**.

Also, spreading matrix to the antenna domain having a size of (number of transmission antennas and number of transmission antennas) may be additionally applicable to the VHT-SIG B transmission scheme of the present invention. When different interleaving is applied to each stream, the spreading matrix when multi-stream is applied can be applicable, and when each stream is transmitted by applying delay thereto, the spreading matrix when a single stream is applied can be applicable.

FIG. **58** shows the configuration of a transmission terminal according to an embodiment of the present invention.

A transmission terminal **5802** includes a signal field generation unit **5804**, a data field generation unit **5806**, a data frame generation unit **5808**, and a transmission unit **5810**. The signal field generation unit **5804** iteratively generates a signal field according to a frequency band applied to transmission of a data frame. The data field generation unit **5806** generates a data field including data to be transmitted to a reception terminal. The data frame generation unit **5808** generates a data frame including the signal field generated by the signal field generation unit **5804** and the data field generated by the data field generation unit **5806**. The transmission unit **5810** transmits the data frame generated by the data frame generation unit **5808** to the reception terminal.

Here, the signal field may include a length field indicating the length of a data field, and the length field may have a length which differs according to a frequency band applied to transmission of a data frame. Also, the signal field may include a modulation and coding scheme (MCS) field indicating a modulation method and a coding method of the data field. Also, the signal field may be a dedicated signal field for transferring information regarding each user. The data frame may include a cyclic redundancy check (CRC) field for detecting an error of the signal field.

FIG. **59** shows the configuration of a reception terminal according to an embodiment of the present invention.

A reception terminal **5902** includes a reception unit **5904** and a data obtaining unit **5906**. The reception unit **5904** receives a data frame including a signal field and a data field.

Here, the signal field may include a length field indicating the length of a data field, and the length field may have a length which differs according to a frequency band applied to transmission of a data frame. Also, the signal field may include a modulation and coding scheme (MCS) field indicating a modulation method and a coding method of the data field. Also, the signal field may be a dedicated signal field for transferring information regarding each user. The data frame may include a cyclic redundancy check (CRC) field for detecting an error of the signal field.

The data obtaining unit **5906** obtains data included in the data field by using the signal field included in the received data frame. Here, the data obtaining unit **5906** may obtain the data by using the length field, the MCS field, or the like, included in the signal field. Also, the data obtaining unit **5906** may detect an error of the signal field by using the CRC field included in the data frame.

FIG. **60** is a flow chart illustrating the process of a method for transmitting data by a transmission terminal according to an embodiment of the present invention.

First, a signal field is iteratively generated according to a frequency band applied to transmission of a data frame (**6002**). Also, a data field including data to be transmitted to a reception terminal is generated (**6004**). And then, a data frame including the generated signal field and data field is generated (**6006**). Thereafter, the generated data frame is transmitted to a reception terminal (**6008**).

Here, the signal field may include a length field indicating the length of the data field, and the length field may have a length which differs according to a frequency band applied to transmission of the data frame. Also, the signal field may include a modulation and coding scheme (MCS) field indicating a modulation method and a coding method of the data field. Also, the signal field may be a dedicated signal field for transferring information regarding each user. The data frame may include a cyclic redundancy check (CRC) field for detecting an error of the signal field.

FIG. **61** is a flow chart illustrating the process of a method for receiving data by a reception terminal according to an embodiment of the present invention.

First, a data frame including a signal field and a data field is received (**6102**). Here, the signal field may include a length field indicating the length of the data field, and the length field may have a length which differs according to a frequency band applied to transmission of the data frame. Also, the signal field may include a modulation and coding scheme (MCS) field indicating a modulation method and a coding method of the data field. Also, the signal field may be a dedicated signal field for transferring information regarding each user. The data frame may include a cyclic redundancy check (CRC) field for detecting an error of the signal field.

And then, data included in the data field is obtained by using the signal field included in the received data frame (**6104**). In this case, the reception terminal may obtain data by using the length field, the MCS field, or the like, included in the signal field. Also, the reception terminal may detect an error of the signal field by using a CRC field included in the data frame.

According to embodiments of the present invention, when a dedicated signal field is transmitted in the MU-MIMO system, the performance of the signal field is enhanced and a transmission time is reduced by utilizing the user frequency band and the number of streams, whereby a large amount of information can be effectively transmitted by using the signal field.

Although the present invention has been described with reference to exemplary embodiments and the accompanying drawings, it would be appreciated by those skilled in the art that the present invention is not limited thereto but various modifications and alterations might be made without departing from the scope defined in the claims and their equivalents.

The invention claimed is:

1. A wireless communication method, the method comprising:

receiving, by a receiver, a Very High Throughput Signal A (VHT-SIG-A) field on an operating band, the operating band comprising a plurality of 20 MHz bands; and

receiving, by the receiver, a Very High Throughput Signal B (VHT-SIG-B) field on the operating band,

wherein:

the VHT-SIG-A field is transmitted on each of the plurality of 20 MHz bands;

the VHT-SIG-B field comprises a first portion of bits, wherein the first portion of bits is repeated in the VHT-SIG-B field;

the first portion of bits comprises a length indicator; and

a first number of bits representing the length indicator when the operating band is 40 MHz is smaller than a second number of bits representing the length indicator when the operating band is equal to or larger than 80 MHz.

2. The method of claim **1**, wherein the VHT-SIG-A field occupies two orthogonal frequency-division multiplexing (OFDM) symbols and the VHT-SIG-B field occupies one OFDM symbol.

3. The method of claim **1**, wherein the first portion of bits consists of 27 bits and the first number of bits representing the length indicator is 17, if the bandwidth of the operating band is 40 MHz.

4. The method of claim **1**, wherein the first portion of bits consists of 29 bits and the second number of bits represent-

ing the length indicator is 19, if the bandwidth of the operating band is larger than 40 MHz.

5. The method of claim **1**, further comprising:

receiving a data field, the data field including a cyclic redundancy check (CRC) field used for detecting an error of the VHT-SIG-B field.

6. The method of claim **5**, wherein the VHT-SIG-A field, the VHT-SIG-B field and the data field are transmitted as a physical layer convergence procedure (PLCP) protocol data unit (PPDU).

7. The method of claim **1**, wherein the VHT-SIG-A field includes first information common to a plurality receivers and the VHT-SIG-B field includes second information specific to the receiver.

8. The method of claim **1**, wherein:

the first portion of bits includes an index regarding modulation and coding scheme (MCS), the length indicator and tail bits; and

the index regarding MCS is 4 bits long, the tail bits are 6 bits long, and the length indicator is shorter than 20 bits.

9. The method of claim **1**, further comprising obtaining data based on the VHT-SIG-A field and the VHT-SIG-B field.

10. A wireless communication apparatus, comprising:

a processor; and

a memory operably coupled with the processor and storing instructions that, when executed by the processor, cause the wireless communication apparatus to:

receive a Very High Throughput Signal A (VHT-SIG-A) field on an operating band, the operating band comprising a plurality of 20 MHz bands;

receive a Very High Throughput Signal B (VHT-SIG-B) field on the operating band,

wherein:

the VHT-SIG-A field is transmitted on each of the plurality of 20 MHz bands;

the VHT-SIG-B field comprises a first portion of bits, wherein the first portion of bits is repeated in the VHT-SIG-B field;

the first portion of bits comprises a length indicator; and

a first number of bits representing the length indicator when the operating band is 40 MHz is smaller than a second number of bits representing the length indicator when the operating band is equal to or larger than 80 MHz.

11. The apparatus of claim **10**, wherein the VHT-SIG-A field occupies two orthogonal frequency-division multiplexing (OFDM) symbols and the VHT-SIG-B field occupies one OFDM symbol.

12. The apparatus of claim **10**, wherein the first portion of bits consists of 27 bits and the first number of bits representing the length indicator is 17, if the bandwidth of the operating band is 40 MHz.

13. The apparatus of claim **10**, wherein the first portion of bits consists of 29 bits and the second number of bits representing the length indicator is 19, if the bandwidth of the operating band is 40 MHz.

14. The apparatus of claim **10**, wherein the VHT-SIG-A field includes first information common to a plurality receivers and the VHT-SIG-B field includes second information specific to the receiver.

15. The apparatus of claim **10**, wherein the first portion of bits includes an index regarding modulation and coding scheme (MCS), the length indicator and tail bits, and

wherein the index regarding MCS is 4 bits long, the tail bits are 6 bits long, and the length indicator is shorter than 20 bits.

16. The apparatus of claim **10**, wherein the at least one processor is further configured to obtain data based on the VHT-SIG-A field and the VHT-SIG-B field.

17. A wireless communication method, the method comprising:

receiving a first control field on a first frequency band, a bandwidth of the first frequency band being a multiple of 20 MHz; and

receiving a second control field on the first frequency band,

wherein:

the second control field comprises a first indicator indicating a length of user data, a reserved bit portion subsequent to the first indicator and a tail bit portion subsequent to the reserved bit portion; and

a first number of bits representing the first indicator when the first frequency band is 40 MHz is smaller than a second number of bits representing the first indicator when the first frequency band is equal to or larger than 80 MHz.

18. The method of claim **17**, wherein a number of bits representing the first indicator is increased as the bandwidth of the first frequency band increases.

19. The method of claim **17**, wherein a number of bits representing the first indicator is one of 17, 19 and 21 bits, and the tail bit portion consists of 6 bits.

20. The method of claim **19**, wherein the first control field is a Very High Throughput Signal A (VHT-SIG-A) field and the second control field is a Very High Throughput Signal B (VHT-SIG-B) field, and wherein the first control field comprises two orthogonal frequency division multiplexing (OFDM) symbols and the second control field comprises one OFDM symbol.

21. The method of claim **17**, wherein:

the bandwidth of the first frequency band is 40 MHz, the second control field comprises two identical control sub-fields each comprising in order the first indicator, the reserved bit portion and the tail bit portion; and

the first indicator consists of 19 bits, the reserved bit portion consists of 2 bits, and each of the two control sub-fields consists of 27 bits.

22. The method of claim **17**, wherein:

the bandwidth of the first frequency band is 40 MHz, the second control field comprises four identical control sub-fields each comprising in order the first indicator, the reserved bit portion and the tail bit portion; and

the first indicator consists of 21 bits, the reserved bit portion consists of 2 bits, and each of the control sub-fields consists of 29 bits.

23. The method of claim **17**, further comprising:

receiving a data field subsequent to the second control field, the data field comprising a cyclic redundancy check (CRC) field used for detecting an error of the second control field.

24. A wireless communication device, comprising:

a processor; and

a memory operably coupled with the processor and storing program instructions that, when executed by the processor, cause the wireless communication device to:

receive a first control field on a first frequency band, a bandwidth of the first frequency band being a multiple of 20 MHz; and

receive a second control field on the first frequency band, wherein:

the second control field comprises a first indicator indicating a length of user data, a reserved bit portion subsequent to the first indicator and a tail bit portion subsequent to the reserved bit portion, and

a first number of bits representing the first indicator when the first frequency band is 40 MHz is smaller than a second number of bits representing the first indicator when the first frequency band is equal to or larger than 80 MHz.

25. The device of claim **24**, wherein a number of bits representing the first indicator is increased as the bandwidth of the first frequency band increases.

26. The device of claim **24**, wherein a number of bits representing the first indicator is one of 17, 19 and 21 bits, and the tail bit portion consists of 6 bits.

27. The device of claim **26**, wherein the first control field is a Very High Throughput Signal A (VHT-SIG-A) field and the second control field is a Very High Throughput Signal B (VHT-SIG-B) field, and wherein the first control field comprises two orthogonal frequency division multiplexing (OFDM) symbols and the second control field comprises one OFDM symbol.

28. The device of claim **24**, wherein:

the bandwidth of the first frequency band is larger than 40 MHz, the second control field comprises two identical control sub-fields each comprising in order the first indicator, the reserved bit portion and the tail bit portion; and

the first indicator consists of 19 bits, the reserved bit portion consists of 2 bits, and each of the two control sub-fields consists of 27 bits.

29. The device of claim **24**, wherein:

the bandwidth of the first frequency band is 40 MHz, the second control field comprises four identical control sub-fields each comprising in order the first indicator, the reserved bit portion and the tail bit portion; and

the first indicator consists of 21 bits, the reserved bit portion consists of 2 bits, and each of the control sub-fields consists of 29 bits.

30. The device of claim **24**, wherein the processor, when performing the program instructions, further causes the wireless communication device to:

receive a data field subsequent to the second control field, the data field comprising a cyclic redundancy check (CRC) field used for detecting an error of the second control field.

31. A communication method in a wireless network, the method comprising:

transmitting a first control field over a first frequency band, a bandwidth of the first frequency band being a multiple of 20 MHz; and

transmitting a second control field over the first frequency band,

wherein the second control field comprises a first indicator indicating a length of subsequent user data, a reserved bit portion subsequent to the first indicator and a tail bit portion subsequent to the reserved bit portion, and

wherein a number of bits comprising the first indicator when the first frequency band is 40 MHz is smaller than a number of bits comprising the first indicator when the first frequency band is larger than 40 MHz.

32. The method of claim **31**, wherein the number of bits comprising the first indicator is increased as the bandwidth of the first frequency band increases.

33. The method of claim **31**, wherein the number of bits comprising the first indicator is one of 17, 19 and 21 bits, and a length of the tail bit portion is 6 bits.

34. The method of claim **33**, wherein the first control field is a Very High Throughput Signal A (VHT-SIG-A) field and the second control field is a Very High Throughput Signal B (VHT-SIG-B) field, and wherein the first control field comprises two orthogonal frequency division multiplexing (OFDM) symbols and the second control field comprises one OFDM symbol.

35. The method of claim **31**, wherein the bandwidth of the first frequency band is 40 MHz, the second control field comprises two identical control sub-fields each comprising in order the first indicator, the reserved bit portion and the tail bit portion, and

wherein a length of the first indicator is 19 bits, a length of the reserved bit portion is 2 bits, and each of the two control sub-fields is 27 bits long.

36. The method of claim **31**, wherein the bandwidth of the first frequency band is larger than 40 MHz, the second control field comprises four identical control sub-fields each comprising in order the first indicator, the reserved bit portion and the tail bit portion, and

wherein a length of the first indicator is 21 bits, a length of the reserved bit portion is 2 bits, and each of the control sub-fields is 29 bits long.

37. The method of claim **31**, further comprising:

transmitting a data field subsequent to the second control field, the data field comprising a cyclic redundancy check (CRC) field used for detecting an error of the second control field.

38. A communication device, comprising:

a processor; and

a memory operably coupled with the processor and storing program instructions that, when executed by the processor, cause the communication device to:

transmit a first control field over a first frequency band, a bandwidth of the first frequency band being a multiple of 20 MHz; and

transmit a second control field over the first frequency band,

wherein the second control field comprises a first indicator indicating a length of subsequent user data, a reserved bit portion subsequent to the first indicator and a tail bit portion subsequent to the reserved bit portion, and

wherein a number of bits comprising the first indicator when the first frequency band is 40 MHz is smaller than a number of bits comprising the first indicator when the first frequency band is larger than 40 MHz.

39. The device of claim **38**, wherein the number of bits comprising the first indicator is increased as the bandwidth of the first frequency band increases.

40. The device of claim **38**, wherein the number of bits comprising the first indicator is one of 17, 19 and 21 bits, and a length of the tail bit portion is 6 bits.

41. The device of claim **40**, wherein the first control field is a Very High Throughput Signal A (VHT-SIG-A) field and the second control field is a Very High Throughput Signal B (VHT-SIG-B) field, and wherein the first control field comprises two orthogonal frequency division multiplexing (OFDM) symbols and the second control field comprises one OFDM symbol.

42. The device of claim **38**, wherein the bandwidth of the first frequency band is 40 MHz, the second control field

comprises two identical control sub-fields each comprising in order the first indicator, the reserved bit portion and the tail bit portion, and

wherein a length of the first indicator is 19 bits, a length of the reserved bit portion is 2 bits, and each of the two control sub-fields is 27 bits long.

43. The device of claim **38**, wherein the bandwidth of the first frequency band is larger than 40 MHz, the second control field comprises four identical control sub-fields each comprising in order the first indicator, the reserved bit portion and the tail bit portion, and

wherein a length of the first indicator is 21 bits, a length of the reserved bit portion is 2 bits, and each of the control sub-fields is 29 bits long.

44. The device of claim **38**, wherein the processor, when performing the program instructions, further causes the communication device to:

transmit a data field subsequent to the second control field, the data field comprising a cyclic redundancy check (CRC) field used for detecting an error of the second control field.

* * * * *