US009962158B2

(12) **United States Patent**
Hall et al.

(10) **Patent No.: US 9,962,158 B2**
(45) **Date of Patent: *May 8, 2018**

(54) **SURGICAL STAPLING APPARATUSES WITH LOCKABLE END EFFECTOR POSITIONING SYSTEMS**

(71) Applicant: **Ethicon LLC**, Guaynabo, PR (US)

(72) Inventors: **Steven G. Hall**, Cincinnati, OH (US); **Randall J. Tanguay**, Lebanon, OH (US); **Jeffrey D. Messerly**, Cincinnati, OH (US); **Galen C. Robertson**, Apex, NC (US); **Andrew M. Zwolinski**, Cincinnati, OH (US); **Frederick E. Shelton, IV**, Hillsboro, OH (US)

(73) Assignee: **Ethicon LLC**, Guaynabo, PR (US)

(*) Notice: Subject to any disclaimer, the term of this patent is extended or adjusted under 35 U.S.C. 154(b) by 100 days.

This patent is subject to a terminal disclaimer.

(21) Appl. No.: **14/845,688**

(22) Filed: **Sep. 4, 2015**

(65) **Prior Publication Data**

US 2015/0374367 A1 Dec. 31, 2015

Related U.S. Application Data

(63) Continuation of application No. 14/459,496, filed on Aug. 14, 2014, now Pat. No. 9,204,878, which is a (Continued)

(51) **Int. Cl.**
A61B 17/068 (2006.01)
A61B 17/115 (2006.01)
(Continued)

(52) **U.S. Cl.**
CPC ..... ***A61B 17/068*** (2013.01); ***A61B 17/07207*** (2013.01); ***A61B 17/115*** (2013.01); (Continued)

(58) **Field of Classification Search**
CPC . A61B 17/068; A61B 17/0682; A61B 17/072; A61B 17/07207; A61B 17/105;
(Continued)

(56) **References Cited**

U.S. PATENT DOCUMENTS

66,052 A 6/1867 Smith
662,587 A 11/1900 Blake
(Continued)

FOREIGN PATENT DOCUMENTS

AU 2008207624 A1 3/2009
AU 2010214687 A1 9/2010
(Continued)

OTHER PUBLICATIONS

European Search Report for Application No. 09250361.4, dated Nov. 2, 2012 (7 pages).
(Continued)

Primary Examiner — Scott A. Smith

(57) **ABSTRACT**

A surgical instrument that comprises a housing, an elongate shaft configured for operable attachment to a surgical end effector, and a selectively lockable rotation system is disclosed. The selectively lockable rotation system comprises a mounting member coupled to the elongate shaft and being rotatably supported on the housing for selective rotation relative to the housing about a longitudinal axis defined by the elongate shaft. The selectively lockable rotation system further comprises a switch member supported for selective longitudinal movement relative to the housing and the mounting member between an unlocked position wherein the mounting member is freely rotatable relative to the housing and a locked position wherein a locking formation on a distal end of the switch member is in retaining engage-
(Continued)

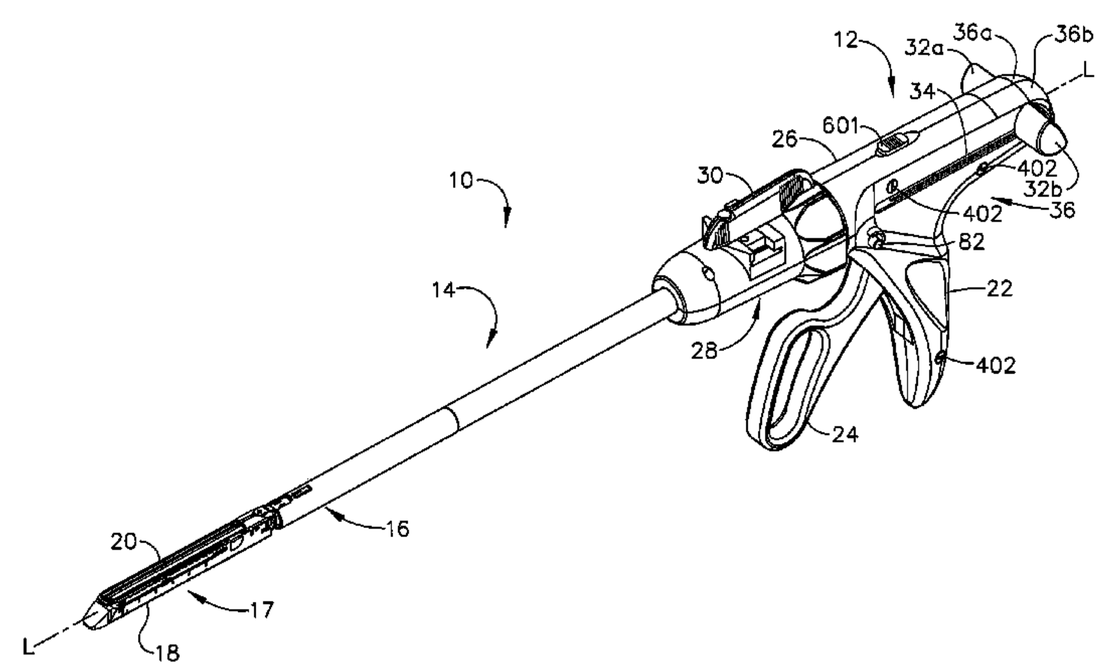

ment with the mounting member to prevent the mounting member and the elongate shaft from rotating relative to the housing.

23 Claims, 114 Drawing Sheets

Related U.S. Application Data

continuation of application No. 12/957,685, filed on Dec. 1, 2010, now Pat. No. 8,875,971, which is a continuation of application No. 12/031,326, filed on Feb. 14, 2008, now Pat. No. 7,866,527.

(51) **Int. Cl.**

A61B 50/30	(2016.01)
A61B 17/072	(2006.01)
A61B 17/00	(2006.01)
A61B 17/29	(2006.01)
A61B 17/32	(2006.01)
A61B 90/00	(2016.01)

(52) **U.S. Cl.**

CPC ***A61B 50/30*** (2016.02); *A61B 17/0682* (2013.01); *A61B 2017/00371* (2013.01); *A61B 2017/00398* (2013.01); *A61B 2017/00473* (2013.01); *A61B 2017/00946* (2013.01); *A61B 2017/07214* (2013.01); *A61B 2017/2923* (2013.01); *A61B 2017/2927* (2013.01); *A61B 2017/2929* (2013.01); *A61B 2017/2943* (2013.01); *A61B 2017/320052* (2013.01); *A61B 2090/0813* (2016.02)

(58) **Field of Classification Search**

CPC A61B 17/115; A61B 2017/07214; A61B 2017/00398

USPC 227/19, 175.1, 176.1, 175.2, 180.1; 606/139, 153, 219

See application file for complete search history.

(56) **References Cited**

U.S. PATENT DOCUMENTS

670,748	A	3/1901	Weddeler
951,393	A	3/1910	Hahn
1,306,107	A	6/1919	Elliott
1,314,601	A	9/1919	McCaskey
1,677,337	A	7/1928	Grove
1,794,907	A	3/1931	Kelly
2,037,727	A	4/1936	La Chapelle
2,132,295	A	10/1938	Hawkins
2,161,632	A	6/1939	Nattenheimer
2,211,117	A	8/1940	Hess
2,214,870	A	9/1940	West
2,318,379	A	5/1943	Davis et al.
2,329,440	A	9/1943	La Place
2,441,096	A	5/1948	Happe
2,448,741	A	9/1948	Scott et al.
2,450,527	A	10/1948	Smith et al.
2,526,902	A	10/1950	Rublee
2,527,256	A	10/1950	Jackson
2,578,686	A	12/1951	Fish
2,674,149	A	4/1954	Benson
2,711,461	A	6/1955	Happe
2,804,848	A	9/1957	O'Farrell et al.
2,808,482	A	10/1957	Zanichkowsky et al.
2,853,074	A	9/1958	Olson
2,837,004	A	5/1959	Stewart
2,959,974	A	11/1960	Emrick
3,032,769	A	5/1962	Palmer
3,075,062	A	1/1963	Iaccarino
3,078,465	A	2/1963	Bobrov
3,079,606	A	3/1963	Bobrov et al.
3,166,072	A	1/1965	Sullivan, Jr.
3,196,869	A	7/1965	Scholl
3,204,731	A	9/1965	Bent et al.
3,266,494	A	8/1966	Brownrigg et al.
3,269,630	A	8/1966	Fleischer
3,275,211	A	9/1966	Hirsch et al.
3,317,103	A	5/1967	Cullen et al.
3,317,105	A	5/1967	Astafjev et al.
3,357,296	A	12/1967	Lefever
3,490,675	A	1/1970	Green et al.
3,494,533	A	2/1970	Green et al.
3,499,591	A	3/1970	Green
3,503,396	A	3/1970	Pierie et al.
3,551,987	A	1/1971	Wilkinson
3,568,675	A	3/1971	Harvey
3,572,159	A	3/1971	Tschanz
3,583,393	A	6/1971	Takahashi
3,598,943	A	8/1971	Barrett
3,608,549	A	9/1971	Merrill
3,640,317	A	2/1972	Panfili
3,643,851	A	2/1972	Green et al.
3,661,666	A	5/1972	Foster et al.
3,662,939	A	5/1972	Bryan
3,695,646	A	10/1972	Mommsen
3,709,221	A	1/1973	Riely
3,717,294	A	2/1973	Green
3,734,207	A	5/1973	Fishbein
3,740,994	A	6/1973	DeCarlo, Jr.
3,744,495	A	7/1973	Johnson
3,746,002	A	7/1973	Haller
3,751,902	A	8/1973	Kingsbury et al.
3,799,151	A	3/1974	Fukaumi et al.
3,819,100	A	6/1974	Noiles et al.
3,821,919	A	7/1974	Knohl
3,841,474	A	10/1974	Maier
3,851,196	A	11/1974	Hinds
3,885,491	A	5/1975	Curtis
3,892,228	A	7/1975	Mitsui
3,894,174	A	7/1975	Cartun
3,940,844	A	3/1976	Colby et al.
3,950,686	A	4/1976	Randall
3,955,581	A	5/1976	Spasiano et al.
RE28,932	E	8/1976	Noiles et al.
3,981,051	A	9/1976	Brumlik
4,054,108	A	10/1977	Gill
4,060,089	A	11/1977	Noiles
4,106,446	A	8/1978	Yamada et al.
4,111,206	A	9/1978	Vishnevsky et al.
4,129,059	A	12/1978	Van Eck
4,169,990	A	10/1979	Lerdman
4,180,285	A	12/1979	Reneau
4,198,734	A	4/1980	Brumlik
4,198,982	A	4/1980	Fortner et al.
4,207,898	A	6/1980	Becht
4,213,562	A	7/1980	Garrett et al.
4,226,242	A	10/1980	Jarvik
4,244,372	A	1/1981	Kapitanov et al.
4,250,436	A	2/1981	Weissman
4,261,244	A	4/1981	Becht et al.
4,272,002	A	6/1981	Moshofsky
4,272,662	A	6/1981	Simpson
4,274,304	A	6/1981	Curtiss
4,275,813	A	6/1981	Noiles
4,289,133	A	9/1981	Rothfuss
4,296,654	A	10/1981	Mercer
4,304,236	A	12/1981	Conta et al.
4,305,539	A	12/1981	Korolkov et al.
4,312,685	A	1/1982	Riedl
4,317,451	A	3/1982	Cerwin et al.
4,321,002	A	3/1982	Froehlich
4,328,839	A	5/1982	Lyons et al.
4,331,277	A	5/1982	Green
4,340,331	A	7/1982	Savino
4,347,450	A	8/1982	Colligan
4,349,028	A	9/1982	Green
4,353,371	A	10/1982	Cosman
4,373,147	A	2/1983	Carlson, Jr.

(56) **References Cited**

U.S. PATENT DOCUMENTS

4,379,457 A 4/1983 Gravener et al.
4,380,312 A 4/1983 Landrus
4,382,326 A 5/1983 Rabuse
4,383,634 A 5/1983 Green
4,393,728 A 7/1983 Larson et al.
4,396,139 A 8/1983 Hall et al.
4,397,311 A 8/1983 Kanshin et al.
4,402,445 A 9/1983 Green
4,408,692 A 10/1983 Siegel et al.
4,409,057 A 10/1983 Molenda et al.
4,415,112 A 11/1983 Green
4,416,276 A 11/1983 Newton et al.
4,428,376 A 1/1984 Mericle
4,429,695 A 2/1984 Green
4,434,796 A 3/1984 Karapetian et al.
4,438,659 A 3/1984 Desplats
4,442,964 A 4/1984 Becht
4,448,194 A 5/1984 DiGiovanni et al.
4,451,743 A 5/1984 Suzuki et al.
4,454,887 A 6/1984 Krüger
4,467,805 A 8/1984 Fukuda
4,470,414 A 9/1984 Imagawa et al.
4,473,077 A 9/1984 Noiles et al.
4,475,679 A 10/1984 Fleury, Jr.
4,485,816 A 12/1984 Krumme
4,485,817 A 12/1984 Swiggett
4,486,928 A 12/1984 Tucker et al.
4,488,523 A 12/1984 Shichman
4,489,875 A 12/1984 Crawford et al.
4,499,895 A 2/1985 Takayama
4,500,024 A 2/1985 DiGiovanni et al.
4,505,272 A 3/1985 Utyamyshev et al.
4,505,273 A 3/1985 Braun et al.
4,505,414 A 3/1985 Filipi
4,506,671 A 3/1985 Green
4,512,038 A 4/1985 Alexander et al.
4,520,817 A 6/1985 Green
4,522,327 A 6/1985 Korthoff et al.
4,526,174 A 7/1985 Froehlich
4,527,724 A 7/1985 Chow et al.
4,530,453 A 7/1985 Green
4,531,522 A 7/1985 Bedi et al.
4,532,927 A 8/1985 Miksza, Jr.
4,548,202 A 10/1985 Duncan
4,565,109 A 1/1986 Tsay
4,565,189 A 1/1986 Mabuchi
4,566,620 A 1/1986 Green et al.
4,569,469 A 2/1986 Mongeon et al.
4,571,213 A 2/1986 Ishimoto
4,573,468 A 3/1986 Conta et al.
4,573,469 A 3/1986 Golden et al.
4,573,622 A 3/1986 Green et al.
4,576,167 A 3/1986 Noiles et al.
4,580,712 A 4/1986 Green
4,585,153 A 4/1986 Failla et al.
4,589,416 A 5/1986 Green
4,591,085 A 5/1986 Di Giovanni
4,597,753 A 7/1986 Turley
4,600,037 A 7/1986 Hatten
4,604,786 A 8/1986 Howie, Jr.
4,605,001 A 8/1986 Rothfuss et al.
4,605,004 A 8/1986 Di Giovanni et al.
4,606,343 A 8/1986 Conta et al.
4,607,638 A 8/1986 Crainich
4,608,981 A 9/1986 Rothfuss et al.
4,610,250 A 9/1986 Green
4,610,383 A 9/1986 Rothfuss et al.
4,619,262 A 10/1986 Taylor
4,619,391 A 10/1986 Sharkany et al.
4,628,459 A 12/1986 Shinohara et al.
4,629,107 A 12/1986 Fedotov et al.
4,632,290 A 12/1986 Green et al.
4,633,874 A 1/1987 Chow et al.
4,634,419 A 1/1987 Kreizman et al.
4,641,076 A 2/1987 Linden
4,643,731 A 2/1987 Eckenhoff
4,646,722 A 3/1987 Silverstein et al.
4,655,222 A 4/1987 Florez et al.
4,662,555 A 5/1987 Thornton
4,663,874 A 5/1987 Sano et al.
4,664,305 A 5/1987 Blake, III et al.
4,665,916 A 5/1987 Green
4,667,674 A 5/1987 Korthoff et al.
4,669,647 A 6/1987 Storace
4,671,445 A 6/1987 Barker et al.
4,676,245 A 6/1987 Fukuda
4,684,051 A 8/1987 Akopov et al.
4,691,703 A 9/1987 Auth et al.
4,693,248 A 9/1987 Failla
4,700,703 A 10/1987 Resnick et al.
4,708,141 A 11/1987 Inoue et al.
4,709,120 A 11/1987 Pearson
4,715,520 A 12/1987 Roehr, Jr. et al.
4,719,917 A 1/1988 Barrows et al.
4,727,308 A 2/1988 Huljak et al.
4,728,020 A 3/1988 Green et al.
4,728,876 A 3/1988 Mongeon et al.
4,729,260 A 3/1988 Dudden
4,730,726 A 3/1988 Holzwarth
4,741,336 A 5/1988 Failla et al.
4,743,214 A 5/1988 Tai-Cheng
4,747,820 A 5/1988 Hornlein et al.
4,750,902 A 6/1988 Wuchinich
4,752,024 A 6/1988 Green et al.
4,754,909 A 7/1988 Barker et al.
4,767,044 A 8/1988 Green
4,773,420 A 9/1988 Green
4,777,780 A 10/1988 Holzwarth
4,787,387 A 11/1988 Burbank, III et al.
4,790,225 A 12/1988 Moody et al.
4,805,617 A 2/1989 Bedi et al.
4,805,823 A 2/1989 Rothfuss
4,809,695 A 3/1989 Gwathmey et al.
4,815,460 A 3/1989 Porat et al.
4,817,847 A 4/1989 Redtenbacher et al.
4,819,853 A 4/1989 Green
4,821,939 A 4/1989 Green
4,827,911 A 5/1989 Broadwin et al.
4,830,855 A 5/1989 Stewart
4,834,720 A 5/1989 Blinkhorn
4,844,068 A 7/1989 Arata et al.
4,848,637 A 7/1989 Pruitt
4,856,078 A 8/1989 Konopka
4,865,030 A 9/1989 Polyak
4,868,530 A 9/1989 Ahs
4,869,414 A 9/1989 Green et al.
4,869,415 A 9/1989 Fox
4,873,977 A 10/1989 Avant et al.
4,875,486 A 10/1989 Rapoport et al.
4,880,015 A 11/1989 Nierman
4,890,613 A 1/1990 Golden et al.
4,892,244 A 1/1990 Fox et al.
4,893,622 A 1/1990 Green et al.
4,896,678 A 1/1990 Ogawa
4,900,303 A 2/1990 Lemelson
4,903,697 A 2/1990 Resnick et al.
4,915,100 A 4/1990 Green
4,930,503 A 6/1990 Pruitt
4,930,674 A 6/1990 Barak
4,931,047 A 6/1990 Broadwin et al.
4,932,960 A 6/1990 Green et al.
4,933,843 A 6/1990 Scheller et al.
4,938,408 A 7/1990 Bedi et al.
4,941,623 A 7/1990 Pruitt
4,943,182 A 7/1990 Hoblingre
4,944,443 A 7/1990 Oddsen et al.
4,951,860 A 8/1990 Peters et al.
4,955,959 A 9/1990 Tompkins et al.
4,965,709 A 10/1990 Ngo
4,973,274 A 11/1990 Hirukawa
4,978,049 A 12/1990 Green
4,978,333 A 12/1990 Broadwin et al.
4,986,808 A 1/1991 Broadwin et al.
4,988,334 A 1/1991 Hornlein et al.

(56) **References Cited**

U.S. PATENT DOCUMENTS

5,002,543 A 3/1991 Bradshaw et al.
5,002,553 A 3/1991 Shiber
5,005,754 A 4/1991 Van Overloop
5,009,661 A 4/1991 Michelson
5,014,899 A 5/1991 Presty et al.
5,015,227 A 5/1991 Broadwin et al.
5,018,515 A 5/1991 Gilman
5,018,657 A 5/1991 Pedlick et al.
5,024,671 A 6/1991 Tu et al.
5,027,834 A 7/1991 Pruitt
5,031,814 A 7/1991 Tompkins et al.
5,035,040 A 7/1991 Kerrigan et al.
5,038,109 A 8/1991 Goble et al.
5,040,715 A 8/1991 Green et al.
5,042,707 A 8/1991 Taheri
5,061,269 A 10/1991 Muller
5,062,563 A 11/1991 Green et al.
5,065,929 A 11/1991 Schulze et al.
5,071,052 A 12/1991 Rodak et al.
5,071,430 A 12/1991 de Salis et al.
5,074,454 A 12/1991 Peters
5,079,006 A 1/1992 Urquhart
5,080,556 A 1/1992 Carreno
5,083,695 A 1/1992 Foslien et al.
5,084,057 A 1/1992 Green et al.
5,088,979 A 2/1992 Filipi et al.
5,088,997 A 2/1992 Delahuerga et al.
5,094,247 A 3/1992 Hernandez et al.
5,100,420 A 3/1992 Green et al.
5,104,025 A 4/1992 Main et al.
5,104,397 A 4/1992 Vasconcelos et al.
5,106,008 A 4/1992 Tompkins et al.
5,108,368 A 4/1992 Hammerslag et al.
5,111,937 A 5/1992 Moeinzadeh et al.
5,116,349 A 5/1992 Aranyi
5,122,156 A 6/1992 Granger et al.
5,124,990 A 6/1992 Williamson
5,129,570 A 7/1992 Schulze et al.
5,137,198 A 8/1992 Nobis et al.
5,139,513 A 8/1992 Segato
5,141,144 A 8/1992 Foslien et al.
5,142,932 A 9/1992 Moya et al.
5,155,941 A 10/1992 Takahashi et al.
5,156,315 A 10/1992 Green et al.
5,156,609 A 10/1992 Nakao et al.
5,156,614 A 10/1992 Green et al.
5,158,567 A 10/1992 Green
D330,699 S 11/1992 Gill
5,163,598 A 11/1992 Peters et al.
5,171,247 A 12/1992 Hughett et al.
5,171,249 A 12/1992 Stefanchik et al.
5,171,253 A 12/1992 Klieman et al.
5,188,111 A 2/1993 Yates et al.
5,190,517 A 3/1993 Zieve et al.
5,190,544 A 3/1993 Chapman et al.
5,190,560 A 3/1993 Woods et al.
5,192,288 A 3/1993 Thompson et al.
5,195,968 A 3/1993 Lundquist et al.
5,197,648 A 3/1993 Gingold
5,197,649 A 3/1993 Bessler et al.
5,197,966 A 3/1993 Sommerkamp
5,200,280 A 4/1993 Karasa
5,205,459 A 4/1993 Brinkerhoff et al.
5,207,697 A 5/1993 Carusillo et al.
5,209,747 A 5/1993 Knoepfler
5,211,649 A 5/1993 Kohler et al.
5,211,655 A 5/1993 Hasson
5,217,457 A 6/1993 Delahuerga et al.
5,217,478 A 6/1993 Rexroth
5,219,111 A 6/1993 Bilotti et al.
5,221,036 A 6/1993 Takase
5,221,281 A 6/1993 Klicek
5,222,963 A 6/1993 Brinkerhoff et al.
5,222,975 A 6/1993 Crainich
5,222,976 A 6/1993 Yoon
5,223,675 A 6/1993 Taft
5,234,447 A 8/1993 Kaster et al.
5,236,440 A 8/1993 Hlavacek
5,239,981 A 8/1993 Anapliotis
5,240,163 A 8/1993 Stein et al.
5,242,457 A 9/1993 Akopov et al.
5,244,462 A 9/1993 Delahuerga et al.
5,246,156 A 9/1993 Rothfuss et al.
5,246,443 A 9/1993 Mai
5,253,793 A 10/1993 Green et al.
5,258,009 A 11/1993 Conners
5,258,012 A 11/1993 Luscombe et al.
5,259,366 A 11/1993 Reydel et al.
5,259,835 A 11/1993 Clark et al.
5,260,637 A 11/1993 Pizzi
5,263,629 A 11/1993 Trumbull et al.
5,263,973 A 11/1993 Cook
5,264,218 A 11/1993 Rogozinski
5,268,622 A 12/1993 Philipp
5,271,543 A 12/1993 Grant et al.
5,271,544 A 12/1993 Fox et al.
RE34,519 E 1/1994 Fox et al.
5,275,323 A 1/1994 Schulze et al.
5,275,608 A 1/1994 Forman et al.
5,279,416 A 1/1994 Malec et al.
5,281,216 A 1/1994 Klicek
5,282,806 A 2/1994 Haber et al.
5,282,829 A 2/1994 Hermes
5,284,128 A 2/1994 Hart
5,285,381 A 2/1994 Iskarous et al.
5,285,945 A 2/1994 Brinkerhoff et al.
5,289,963 A 3/1994 McGarry et al.
5,290,271 A 3/1994 Jernberg
5,292,053 A 3/1994 Bilotti et al.
5,297,714 A 3/1994 Kramer
5,304,204 A 4/1994 Bregen
5,307,976 A 5/1994 Olson et al.
5,309,387 A 5/1994 Mori et al.
5,309,927 A 5/1994 Welch
5,312,023 A 5/1994 Green et al.
5,312,024 A 5/1994 Grant et al.
5,312,329 A 5/1994 Beaty et al.
5,314,424 A 5/1994 Nicholas
5,314,445 A 5/1994 Heidmueller et al.
5,314,466 A 5/1994 Stern et al.
5,318,221 A 6/1994 Green et al.
5,330,487 A 7/1994 Thornton et al.
5,330,502 A 7/1994 Hassler et al.
5,332,142 A 7/1994 Robinson et al.
5,333,422 A 8/1994 Warren et al.
5,333,772 A 8/1994 Rothfuss et al.
5,333,773 A 8/1994 Main et al.
5,334,183 A 8/1994 Wuchinich
5,336,232 A 8/1994 Green et al.
5,339,799 A 8/1994 Kami et al.
5,341,724 A 8/1994 Vatel
5,341,810 A 8/1994 Dardel
5,342,381 A 8/1994 Tidemand
5,342,395 A 8/1994 Jarrett et al.
5,342,396 A 8/1994 Cook
5,343,391 A 8/1994 Mushabac
5,344,060 A 9/1994 Gravener et al.
5,344,454 A 9/1994 Clarke et al.
5,346,504 A 9/1994 Ortiz et al.
5,348,259 A 9/1994 Blanco et al.
5,350,388 A 9/1994 Epstein
5,350,391 A 9/1994 Iacovelli
5,350,400 A 9/1994 Esposito et al.
5,352,229 A 10/1994 Goble et al.
5,352,235 A 10/1994 Koros et al.
5,352,238 A 10/1994 Green et al.
5,354,303 A 10/1994 Spaeth et al.
5,356,006 A 10/1994 Alpern et al.
5,358,506 A 10/1994 Green et al.
5,358,510 A 10/1994 Luscombe et al.
5,359,231 A 10/1994 Flowers et al.
D352,780 S 11/1994 Glaeser et al.
5,360,305 A 11/1994 Kerrigan
5,360,428 A 11/1994 Hutchinson, Jr.

(56) **References Cited**

U.S. PATENT DOCUMENTS

5,364,001 A 11/1994 Bryan
5,364,003 A 11/1994 Williamson, IV
5,366,133 A 11/1994 Geiste
5,366,134 A 11/1994 Green et al.
5,366,479 A 11/1994 McGarry et al.
5,368,015 A 11/1994 Wilk
5,368,592 A 11/1994 Stern et al.
5,370,645 A 12/1994 Klicek et al.
5,372,124 A 12/1994 Takayama et al.
5,372,596 A 12/1994 Klicek et al.
5,372,602 A 12/1994 Burke
5,374,277 A 12/1994 Hassler
5,376,095 A 12/1994 Ortiz
5,379,933 A 1/1995 Green et al.
5,381,649 A 1/1995 Webb
5,381,782 A 1/1995 DeLaRama et al.
5,382,247 A 1/1995 Cimino et al.
5,383,880 A 1/1995 Hooven
5,383,881 A 1/1995 Green et al.
5,383,888 A 1/1995 Zvenyatsky et al.
5,383,895 A 1/1995 Holmes et al.
5,389,098 A 2/1995 Tsuruta et al.
5,389,104 A 2/1995 Hahnen et al.
5,391,180 A 2/1995 Tovey et al.
5,392,979 A 2/1995 Green et al.
5,395,030 A 3/1995 Kuramoto et al.
5,395,033 A 3/1995 Byrne et al.
5,395,034 A 3/1995 Allen et al.
5,395,312 A 3/1995 Desai
5,395,384 A 3/1995 Duthoit
5,397,046 A 3/1995 Savage et al.
5,397,324 A 3/1995 Carroll et al.
5,403,312 A 4/1995 Yates et al.
5,405,072 A 4/1995 Zlock et al.
5,405,073 A 4/1995 Porter
5,405,344 A 4/1995 Williamson et al.
5,405,360 A 4/1995 Tovey
5,407,293 A 4/1995 Crainich
5,408,409 A 4/1995 Glassman
5,409,498 A 4/1995 Braddock et al.
5,411,481 A 5/1995 Allen et al.
5,411,508 A 5/1995 Bessler et al.
5,413,107 A 5/1995 Oakley et al.
5,413,267 A 5/1995 Solyntjes et al.
5,413,268 A 5/1995 Green et al.
5,413,272 A 5/1995 Green et al.
5,413,573 A 5/1995 Koivukangas
5,415,334 A 5/1995 Williamson, IV et al.
5,415,335 A 5/1995 Knodell, Jr.
5,417,203 A 5/1995 Tovey et al.
5,417,361 A 5/1995 Williamson, IV
5,421,829 A 6/1995 Olichney et al.
5,422,567 A 6/1995 Matsunaga
5,423,471 A 6/1995 Mastri et al.
5,423,809 A 6/1995 Klicek
5,425,745 A 6/1995 Green et al.
5,431,322 A 7/1995 Green et al.
5,431,654 A 7/1995 Nic
5,431,668 A 7/1995 Burbank, III et al.
5,433,721 A 7/1995 Hooven et al.
5,437,681 A 8/1995 Meade et al.
5,438,302 A 8/1995 Goble
5,439,155 A 8/1995 Viola
5,439,156 A 8/1995 Grant et al.
5,439,479 A 8/1995 Schichman et al.
5,441,191 A 8/1995 Linden
5,441,193 A 8/1995 Gravener
5,441,483 A 8/1995 Avitall
5,441,494 A 8/1995 Ortiz
5,444,113 A 8/1995 Sinclair et al.
5,445,155 A 8/1995 Sieben
5,445,304 A 8/1995 Plyley et al.
5,445,644 A 8/1995 Pietrafitta et al.
5,447,265 A 9/1995 Vidal et al.
5,447,417 A 9/1995 Kuhl et al.
5,447,513 A 9/1995 Davison et al.
5,449,355 A 9/1995 Rhum et al.
5,449,365 A 9/1995 Green et al.
5,449,370 A 9/1995 Vaitekunas
5,452,836 A 9/1995 Huitema et al.
5,452,837 A 9/1995 Williamson, IV et al.
5,454,378 A 10/1995 Palmer et al.
5,454,827 A 10/1995 Aust et al.
5,456,401 A 10/1995 Green et al.
5,458,579 A 10/1995 Chodorow et al.
5,462,215 A 10/1995 Viola et al.
5,464,013 A 11/1995 Lemelson
5,464,144 A 11/1995 Guy et al.
5,464,300 A 11/1995 Crainich
5,465,894 A 11/1995 Clark et al.
5,465,895 A 11/1995 Knodel et al.
5,465,896 A 11/1995 Allen et al.
5,466,020 A 11/1995 Page et al.
5,467,911 A 11/1995 Tsuruta et al.
5,468,253 A 11/1995 Bezwada et al.
5,470,006 A 11/1995 Rodak
5,470,007 A 11/1995 Plyley et al.
5,470,009 A 11/1995 Rodak
5,470,010 A 11/1995 Rothfuss et al.
5,472,132 A 12/1995 Savage et al.
5,472,442 A 12/1995 Klicek
5,473,204 A 12/1995 Temple
5,474,057 A 12/1995 Makower et al.
5,474,223 A 12/1995 Viola et al.
5,474,566 A 12/1995 Alesi et al.
5,476,206 A 12/1995 Green et al.
5,476,479 A 12/1995 Green et al.
5,478,003 A 12/1995 Green et al.
5,478,354 A 12/1995 Tovey et al.
5,480,089 A 1/1996 Blewett
5,480,409 A 1/1996 Riza
5,482,197 A 1/1996 Green et al.
5,484,095 A 1/1996 Green et al.
5,484,398 A 1/1996 Stoddard
5,484,451 A 1/1996 Akopov et al.
5,485,947 A 1/1996 Olson et al.
5,485,952 A 1/1996 Fontayne
5,487,499 A 1/1996 Sorrentino et al.
5,487,500 A 1/1996 Knodel et al.
5,489,058 A 2/1996 Plyley et al.
5,489,256 A 2/1996 Adair
5,496,312 A 3/1996 Klicek
5,496,317 A 3/1996 Goble et al.
5,497,933 A 3/1996 DeFonzo et al.
5,501,654 A 3/1996 Failla et al.
5,503,320 A 4/1996 Webster et al.
5,503,635 A 4/1996 Sauer et al.
5,503,638 A 4/1996 Cooper et al.
5,505,363 A 4/1996 Green et al.
5,507,426 A 4/1996 Young et al.
5,509,596 A 4/1996 Green et al.
5,509,916 A 4/1996 Taylor
5,511,564 A 4/1996 Wilk
5,514,129 A 5/1996 Smith
5,514,157 A 5/1996 Nicholas et al.
5,518,163 A 5/1996 Hooven
5,518,164 A 5/1996 Hooven
5,520,678 A 5/1996 Heckele et al.
5,520,700 A 5/1996 Beyar et al.
5,522,817 A 6/1996 Sander et al.
5,522,831 A 6/1996 Sleister et al.
5,527,320 A 6/1996 Carruthers et al.
5,529,235 A 6/1996 Boiarski et al.
D372,086 S 7/1996 Grasso et al.
5,531,305 A 7/1996 Roberts et al.
5,531,744 A 7/1996 Nardella et al.
5,533,521 A 7/1996 Granger
5,533,581 A 7/1996 Barth et al.
5,533,661 A 7/1996 Main et al.
5,535,934 A 7/1996 Boiarski et al.
5,535,935 A 7/1996 Vidal et al.
5,535,937 A 7/1996 Boiarski et al.
5,540,375 A 7/1996 Bolanos et al.
5,541,376 A 7/1996 Ladtkow et al.

(56) **References Cited**

U.S. PATENT DOCUMENTS

5,542,594 A 8/1996 McKean et al.
5,542,949 A 8/1996 Yoon
5,543,119 A 8/1996 Sutter et al.
5,547,117 A 8/1996 Hamblin et al.
5,549,583 A 8/1996 Sanford et al.
5,549,621 A 8/1996 Bessler et al.
5,549,627 A 8/1996 Kieturakis
5,549,628 A 8/1996 Cooper et al.
5,549,637 A 8/1996 Crainich
5,551,622 A 9/1996 Yoon
5,553,675 A 9/1996 Pitzen et al.
5,553,765 A 9/1996 Knodel et al.
5,554,148 A 9/1996 Aebischer et al.
5,554,169 A 9/1996 Green et al.
5,556,416 A 9/1996 Clark et al.
5,558,665 A 9/1996 Kieturakis
5,558,671 A 9/1996 Yates
5,560,530 A 10/1996 Bolanos et al.
5,560,532 A 10/1996 DeFonzo et al.
5,562,239 A 10/1996 Boiarski
5,562,241 A 10/1996 Knodel et al.
5,562,682 A 10/1996 Oberlin et al.
5,562,690 A 10/1996 Green et al.
5,562,701 A 10/1996 Huitema et al.
5,562,702 A 10/1996 Huitema et al.
5,563,481 A 10/1996 Krause
5,564,615 A 10/1996 Bishop et al.
5,569,161 A 10/1996 Ebling et al.
5,569,270 A 10/1996 Weng
5,569,284 A 10/1996 Young et al.
5,571,090 A 11/1996 Sherts
5,571,100 A 11/1996 Goble et al.
5,571,116 A 11/1996 Bolanos et al.
5,571,285 A 11/1996 Chow et al.
5,573,543 A 11/1996 Akopov et al.
5,574,431 A 11/1996 McKeown et al.
5,575,054 A 11/1996 Klinzing et al.
5,575,789 A 11/1996 Bell et al.
5,575,799 A 11/1996 Bolanos et al.
5,575,803 A 11/1996 Cooper et al.
5,575,805 A 11/1996 Li
5,577,654 A 11/1996 Bishop
5,579,978 A 12/1996 Green et al.
5,580,067 A 12/1996 Hamblin et al.
5,582,611 A 12/1996 Tsuruta et al.
5,582,617 A 12/1996 Klieman et al.
5,584,425 A 12/1996 Savage et al.
5,586,711 A 12/1996 Plyley et al.
5,588,579 A 12/1996 Schnut et al.
5,588,580 A 12/1996 Paul et al.
5,588,581 A 12/1996 Conlon et al.
5,591,170 A 1/1997 Spievack et al.
5,591,187 A 1/1997 Dekel
5,597,107 A 1/1997 Knodel et al.
5,599,151 A 2/1997 Daum et al.
5,599,279 A 2/1997 Slotman et al.
5,599,344 A 2/1997 Paterson
5,599,350 A 2/1997 Schulze et al.
5,599,852 A 2/1997 Scopelianos et al.
5,601,224 A 2/1997 Bishop et al.
5,601,573 A 2/1997 Fogelberg et al.
5,603,443 A 2/1997 Clark et al.
5,605,272 A 2/1997 Witt et al.
5,605,273 A 2/1997 Hamblin et al.
5,607,094 A 3/1997 Clark et al.
5,607,095 A 3/1997 Smith et al.
5,607,433 A 3/1997 Polla et al.
5,607,450 A 3/1997 Zvenyatsky et al.
5,609,285 A 3/1997 Grant et al.
5,609,601 A 3/1997 Kolesa et al.
5,611,709 A 3/1997 McAnulty
5,613,966 A 3/1997 Makower et al.
5,615,820 A 4/1997 Viola
5,618,294 A 4/1997 Aust et al.
5,618,303 A 4/1997 Marlow et al.
5,618,307 A 4/1997 Donlon et al.
5,619,992 A 4/1997 Guthrie et al.
5,620,289 A 4/1997 Curry
5,620,452 A 4/1997 Yoon
5,624,398 A 4/1997 Smith et al.
5,624,452 A 4/1997 Yates
5,626,587 A 5/1997 Bishop et al.
5,626,595 A 5/1997 Sklar et al.
5,628,446 A 5/1997 Geiste et al.
5,628,743 A 5/1997 Cimino
5,628,745 A 5/1997 Bek
5,630,539 A 5/1997 Plyley et al.
5,630,540 A 5/1997 Blewett
5,630,541 A 5/1997 Williamson, IV et al.
5,630,782 A 5/1997 Adair
5,632,432 A 5/1997 Schulze et al.
5,632,433 A 5/1997 Grant et al.
5,634,584 A 6/1997 Okorocha et al.
5,636,779 A 6/1997 Palmer
5,636,780 A 6/1997 Green et al.
5,639,008 A 6/1997 Gallagher et al.
5,643,291 A 7/1997 Pier et al.
5,645,209 A 7/1997 Green et al.
5,647,526 A 7/1997 Green et al.
5,647,869 A 7/1997 Goble et al.
5,649,937 A 7/1997 Bito et al.
5,649,956 A 7/1997 Jensen et al.
5,651,491 A 7/1997 Heaton et al.
5,653,373 A 8/1997 Green et al.
5,653,374 A 8/1997 Young et al.
5,653,677 A 8/1997 Okada et al.
5,653,721 A 8/1997 Knodel et al.
5,655,698 A 8/1997 Yoon
5,657,429 A 8/1997 Wang et al.
5,657,921 A 8/1997 Young et al.
5,658,238 A 8/1997 Suzuki et al.
5,658,281 A 8/1997 Heard
5,658,300 A 8/1997 Bito et al.
5,658,307 A 8/1997 Exconde
5,662,258 A 9/1997 Knodel et al.
5,662,260 A 9/1997 Yoon
5,662,662 A 9/1997 Bishop et al.
5,665,085 A 9/1997 Nardella
5,667,517 A 9/1997 Hooven
5,667,526 A 9/1997 Levin
5,667,527 A 9/1997 Cook
5,669,544 A 9/1997 Schulze et al.
5,669,904 A 9/1997 Platt, Jr. et al.
5,669,907 A 9/1997 Platt, Jr. et al.
5,669,918 A 9/1997 Balazs et al.
5,673,840 A 10/1997 Schulze et al.
5,673,841 A 10/1997 Schulze et al.
5,673,842 A 10/1997 Bittner et al.
5,674,286 A 10/1997 D'Alessio et al.
5,678,748 A 10/1997 Plyley et al.
5,680,981 A 10/1997 Mililli et al.
5,680,982 A 10/1997 Schulze et al.
5,680,983 A 10/1997 Plyley et al.
5,638,270 A 11/1997 Yates et al.
5,683,349 A 11/1997 Makower et al.
5,685,474 A 11/1997 Seeber
5,686,090 A 11/1997 Schilder et al.
5,690,269 A 11/1997 Bolanos et al.
5,692,668 A 12/1997 Schulze et al.
5,693,020 A 12/1997 Rauh
5,693,042 A 12/1997 Boiarski et al.
5,693,051 A 12/1997 Schulze et al.
5,695,494 A 12/1997 Becker
5,695,502 A 12/1997 Pier et al.
5,695,504 A 12/1997 Gifford, III et al.
5,695,524 A 12/1997 Kelley et al.
5,697,542 A 12/1997 Knodel et al.
5,697,543 A 12/1997 Burdorff
5,697,909 A 12/1997 Eggers et al.
5,697,943 A 12/1997 Sauer et al.
5,700,270 A 12/1997 Peyser et al.
5,702,367 A 12/1997 Arts et al.
5,702,408 A 12/1997 Wales et al.
5,702,409 A 12/1997 Rayburn et al.

(56) **References Cited**

U.S. PATENT DOCUMENTS

5,704,087 A 1/1998 Strub
5,704,534 A 1/1998 Huitema et al.
5,706,997 A 1/1998 Green et al.
5,706,998 A 1/1998 Plyley et al.
5,707,392 A 1/1998 Kortenbach
5,709,334 A 1/1998 Sorrentino et al.
5,709,680 A 1/1998 Yates et al.
5,709,706 A 1/1998 Kienzle et al.
5,711,472 A 1/1998 Bryan
5,712,460 A 1/1998 Carr et al.
5,713,128 A 2/1998 Schrenk et al.
5,713,505 A 2/1998 Huitema
5,713,895 A 2/1998 Lontine et al.
5,713,896 A 2/1998 Nardella
5,713,920 A 2/1998 Bezwada et al.
5,715,987 A 2/1998 Kelley et al.
5,715,988 A 2/1998 Palmer
5,716,366 A 2/1998 Yates
5,718,359 A 2/1998 Palmer et al.
5,718,360 A 2/1998 Green et al.
5,718,548 A 2/1998 Costellessa
5,718,714 A 2/1998 Livneh
5,720,744 A 2/1998 Eggleston et al.
D393,067 S 3/1998 Geary et al.
5,725,536 A 3/1998 Oberlin et al.
5,725,554 A 3/1998 Simon et al.
5,728,110 A 3/1998 Vidal et al.
5,728,121 A 3/1998 Bimbo et al.
5,730,758 A 3/1998 Allgeyer
5,732,821 A 3/1998 Stone et al.
5,732,871 A 3/1998 Clark et al.
5,732,872 A 3/1998 Bolduc et al.
5,733,308 A 3/1998 Daugherty et al.
5,735,445 A 4/1998 Vidal et al.
5,735,848 A 4/1998 Yates et al.
5,735,874 A 4/1998 Measamer et al.
5,738,474 A 4/1998 Blewett
5,738,648 A 4/1998 Lands et al.
5,743,456 A 4/1998 Jones et al.
5,747,953 A 5/1998 Philipp
5,749,889 A 5/1998 Bacich et al.
5,749,893 A 5/1998 Vidal et al.
5,752,644 A 5/1998 Bolanos et al.
5,752,965 A 5/1998 Francis et al.
5,755,717 A 5/1998 Yates et al.
5,758,814 A 6/1998 Gallagher et al.
5,762,255 A 6/1998 Chrisman et al.
5,762,256 A 6/1998 Mastri et al.
5,766,188 A 6/1998 Igaki
5,766,205 A 6/1998 Zvenyatsky et al.
5,769,748 A 6/1998 Eyerly et al.
5,769,892 A 6/1998 Kingwell
5,772,379 A 6/1998 Evensen
5,772,578 A 6/1998 Heimberger et al.
5,772,659 A 6/1998 Becker et al.
5,776,130 A 7/1998 Buysse et al.
5,778,939 A 7/1998 Hok-Yin
5,779,130 A 7/1998 Alesi et al.
5,779,131 A 7/1998 Knodel et al.
5,779,132 A 7/1998 Knodel et al.
5,782,396 A 7/1998 Mastri et al.
5,782,397 A 7/1998 Koukline
5,782,749 A 7/1998 Riza
5,782,859 A 7/1998 Nicholas et al.
5,784,934 A 7/1998 Izumisawa
5,785,232 A 7/1998 Vidal et al.
5,785,647 A 7/1998 Tompkins et al.
5,787,897 A 8/1998 Kieturakis
5,792,135 A 8/1998 Madhani et al.
5,792,165 A 8/1998 Klieman et al.
5,794,834 A 8/1998 Hamblin et al.
5,796,188 A 8/1998 Bays
5,797,536 A 8/1998 Smith et al.
5,797,537 A 8/1998 Oberlin et al.
5,797,538 A 8/1998 Heaton et al.
5,797,906 A 8/1998 Rhum et al.
5,797,959 A 8/1998 Castro et al.
5,799,857 A 9/1998 Robertson et al.
5,800,379 A 9/1998 Edwards
5,800,423 A 9/1998 Jensen
5,806,676 A 9/1998 Wasgien
5,807,376 A 9/1998 Viola et al.
5,807,378 A 9/1998 Jensen et al.
5,807,393 A 9/1998 Williamson, IV et al.
5,809,441 A 9/1998 McKee
5,810,721 A 9/1998 Mueller et al.
5,810,811 A 9/1998 Yates et al.
5,810,846 A 9/1998 Virnich et al.
5,810,855 A 9/1998 Rayburn et al.
5,813,813 A 9/1998 Daum et al.
5,814,055 A 9/1998 Knodel et al.
5,814,057 A 9/1998 Oi et al.
5,816,471 A 10/1998 Plyley et al.
5,817,084 A 10/1998 Jensen
5,817,091 A 10/1998 Nardella et al.
5,817,093 A 10/1998 Williamson, IV et al.
5,817,109 A 10/1998 McGarry et al.
5,817,119 A 10/1998 Kileman et al.
5,820,009 A 10/1998 Melling et al.
5,823,066 A 10/1998 Huitema et al.
5,824,333 A 10/1998 Scopelianos et al.
5,826,776 A 10/1998 Schulze et al.
5,827,271 A 10/1998 Buysse et al.
5,827,298 A 10/1998 Hart et al.
5,829,662 A 11/1998 Allen et al.
5,833,690 A 11/1998 Yates et al.
5,833,695 A 11/1998 Yoon
5,833,696 A 11/1998 Whitfield et al.
5,836,503 A 11/1998 Ehrenfels et al.
5,836,960 A 11/1998 Kolesa et al.
5,839,639 A 11/1998 Sauer et al.
5,843,021 A 12/1998 Edwards et al.
5,843,096 A 12/1998 Igaki et al.
5,843,097 A 12/1998 Mayenberger et al.
5,843,122 A 12/1998 Riza
5,843,132 A 12/1998 Ilvento
5,843,169 A 12/1998 Taheri
5,846,254 A 12/1998 Schulze et al.
5,849,011 A 12/1998 Jones et al.
5,849,023 A 12/1998 Mericle
5,855,311 A 1/1999 Hamblin et al.
5,855,583 A 1/1999 Wang et al.
5,860,581 A 1/1999 Robertson et al.
5,860,975 A 1/1999 Goble et al.
5,865,361 A 2/1999 Milliman et al.
5,868,760 A 2/1999 McGuckin, Jr.
5,871,135 A 2/1999 Williamson, IV et al.
5,873,885 A 2/1999 Weidenbenner
5,876,401 A 3/1999 Schulze et al.
5,878,193 A 3/1999 Wang et al.
5,878,607 A 3/1999 Nunes et al.
5,878,937 A 3/1999 Green et al.
5,878,938 A 3/1999 Bittner et al.
5,891,160 A 4/1999 Williamson, IV et al.
5,893,506 A 4/1999 Powell
5,893,835 A 4/1999 Witt et al.
5,893,878 A 4/1999 Pierce
5,894,979 A 4/1999 Powell
5,897,552 A 4/1999 Edwards et al.
5,897,562 A 4/1999 Bolanos et al.
5,899,914 A 5/1999 Zirps et al.
5,901,895 A 5/1999 Heaton et al.
5,902,312 A 5/1999 Frater et al.
5,903,117 A 5/1999 Gregory
5,904,647 A 5/1999 Ouchi
5,904,693 A 5/1999 Dicesare et al.
5,904,702 A 5/1999 Ek et al.
5,906,625 A 5/1999 Bito et al.
5,908,402 A 6/1999 Blythe
5,908,427 A 6/1999 McKean et al.
5,911,353 A 6/1999 Bolanos et al.
5,915,616 A 6/1999 Viola et al.
5,916,225 A 6/1999 Kugel
5,918,791 A 7/1999 Sorrentino et al.

(56) **References Cited**

U.S. PATENT DOCUMENTS

5,919,198	A	7/1999	Graves, Jr. et al.
5,921,956	A	7/1999	Grinberg et al.
5,928,256	A	7/1999	Riza
5,931,847	A	8/1999	Bittner et al.
5,931,853	A	8/1999	McEwen et al.
5,937,951	A	8/1999	Izuchukwu et al.
5,938,667	A	8/1999	Peyser et al.
5,941,442	A	8/1999	Geiste et al.
5,941,890	A	8/1999	Voegele et al.
5,944,172	A	8/1999	Hannula
5,944,715	A	8/1999	Goble et al.
5,947,984	A	9/1999	Whipple
5,948,030	A	9/1999	Miller et al.
5,951,516	A	9/1999	Bunyan
5,951,552	A	9/1999	Long et al.
5,951,574	A	9/1999	Stefanchik et al.
5,951,581	A	9/1999	Saadat et al.
5,954,259	A	9/1999	Viola et al.
5,964,394	A	10/1999	Robertson
5,964,774	A	10/1999	McKean et al.
5,971,916	A	10/1999	Koren
5,973,221	A	10/1999	Collyer et al.
5,977,746	A	11/1999	Hershberger et al.
5,984,949	A	11/1999	Levin
5,988,479	A	11/1999	Palmer
5,997,528	A	12/1999	Bisch et al.
5,997,552	A	12/1999	Person et al.
6,001,108	A	12/1999	Wang et al.
6,003,517	A	12/1999	Sheffield et al.
6,004,319	A	12/1999	Goble et al.
6,004,335	A	12/1999	Vaitekunas et al.
6,010,054	A	1/2000	Johnson et al.
6,010,513	A	1/2000	Törmälä et al.
6,012,494	A	1/2000	Balazs
6,013,076	A	1/2000	Goble et al.
6,015,406	A	1/2000	Goble et al.
6,015,417	A	1/2000	Reynolds, Jr.
6,017,322	A	1/2000	Snoke et al.
6,017,354	A	1/2000	Culp et al.
6,017,356	A	1/2000	Frederick et al.
6,018,227	A	1/2000	Kumar et al.
6,022,352	A	2/2000	Vandewalle
6,024,741	A	2/2000	Williamson, IV et al.
6,024,748	A	2/2000	Manzo et al.
6,024,764	A	2/2000	Schroeppel
6,027,501	A	2/2000	Goble et al.
6,032,849	A	3/2000	Mastri et al.
6,033,378	A	3/2000	Lundquist et al.
6,033,399	A	3/2000	Gines
6,033,427	A	3/2000	Lee
6,037,724	A	3/2000	Buss et al.
6,037,927	A	3/2000	Rosenberg
6,039,733	A	3/2000	Buysse et al.
6,039,734	A	3/2000	Goble
6,042,601	A	3/2000	Smith
6,045,560	A	4/2000	McKean et al.
6,047,861	A	4/2000	Vidal et al.
6,049,145	A	4/2000	Austin et al.
6,050,472	A	4/2000	Shibata
6,050,990	A	4/2000	Tankovich et al.
6,050,996	A	4/2000	Schmaltz et al.
6,053,390	A	4/2000	Green et al.
6,053,922	A	4/2000	Krause et al.
RE36,720	E	5/2000	Green et al.
6,056,735	A	5/2000	Okada et al.
6,056,746	A	5/2000	Goble et al.
6,062,360	A	5/2000	Shields
6,063,095	A	5/2000	Wang et al.
6,063,097	A	5/2000	Oi et al.
6,063,098	A	5/2000	Houser et al.
6,065,679	A	5/2000	Levie et al.
6,065,919	A	5/2000	Peck
6,066,132	A	5/2000	Chen et al.
6,068,627	A	5/2000	Orszulak et al.
6,071,233	A	6/2000	Ishikawa et al.
6,074,386	A	6/2000	Goble et al.
6,074,401	A	6/2000	Gardiner et al.
6,077,286	A	6/2000	Cuschieri et al.
6,079,606	A	6/2000	Milliman et al.
6,080,181	A	6/2000	Jensen et al.
6,032,577	A	7/2000	Coates et al.
6,083,191	A	7/2000	Rose
6,083,234	A	7/2000	Nicholas et al.
6,083,242	A	7/2000	Cook
6,086,544	A	7/2000	Hibner et al.
6,086,600	A	7/2000	Kortenbach
6,090,106	A	7/2000	Goble et al.
6,093,186	A	7/2000	Goble
6,099,537	A	8/2000	Sugai et al.
6,099,551	A	8/2000	Gabbay
6,102,271	A	8/2000	Longo et al.
6,104,304	A	8/2000	Clark et al.
6,106,511	A	8/2000	Jensen
6,109,500	A	8/2000	Alli et al.
6,117,148	A	9/2000	Ravo et al.
6,117,158	A	9/2000	Measamer et al.
6,119,913	A	9/2000	Adams et al.
6,120,433	A	9/2000	Mizuno et al.
6,120,462	A	9/2000	Hibner et al.
6,123,241	A	9/2000	Walter et al.
H1904	H	10/2000	Yates et al.
6,126,058	A	10/2000	Adams et al.
6,126,359	A	10/2000	Dittrich et al.
6,126,670	A	10/2000	Walker et al.
6,131,789	A	10/2000	Schulze et al.
6,131,790	A	10/2000	Piraka
6,132,368	A	10/2000	Cooper
6,139,546	A	10/2000	Koenig et al.
6,149,660	A	11/2000	Laufer et al.
6,152,935	A	11/2000	Kammerer et al.
6,155,473	A	12/2000	Tompkins et al.
6,156,056	A	12/2000	Kearns et al.
6,159,146	A	12/2000	El Gazayerli
6,159,200	A	12/2000	Verdura et al.
6,159,224	A	12/2000	Yoon
6,162,208	A	12/2000	Hipps
6,162,537	A	12/2000	Martin et al.
6,165,175	A	12/2000	Wampler et al.
6,165,184	A	12/2000	Verdura et al.
6,165,188	A	12/2000	Saadat et al.
6,168,605	B1	1/2001	Measamer et al.
6,171,305	B1	1/2001	Sherman
6,171,316	B1	1/2001	Kovac et al.
6,171,330	B1	1/2001	Benchetrit
6,174,308	B1	1/2001	Goble et al.
6,174,309	B1	1/2001	Wrublewski et al.
6,175,290	B1	1/2001	Forsythe et al.
6,179,195	B1	1/2001	Adams et al.
6,179,776	B1	1/2001	Adams et al.
6,181,105	B1	1/2001	Cutolo et al.
6,182,673	B1	2/2001	Kindermann et al.
6,187,003	B1	2/2001	Buysse et al.
6,190,336	B1	2/2001	Rydell
6,193,129	B1	2/2001	Bittner et al.
6,197,042	B1	3/2001	Ginn et al.
6,200,330	B1	3/2001	Benderev et al.
6,202,914	B1	3/2001	Geiste et al.
6,206,897	B1	3/2001	Jamiolkowski et al.
6,206,904	B1	3/2001	Ouchi
6,210,403	B1	4/2001	Klicek
6,213,999	B1	4/2001	Platt, Jr. et al.
6,214,028	B1	4/2001	Yoon et al.
6,220,363	B1	4/2001	Ark et al.
6,223,100	B1	4/2001	Green
6,223,835	B1	5/2001	Habedank et al.
6,224,617	B1	5/2001	Saadat et al.
6,228,081	B1	5/2001	Goble
6,228,083	B1	5/2001	Lands et al.
6,228,084	B1	5/2001	Kirwan, Jr.
6,231,565	B1	5/2001	Tovey et al.
6,234,178	B1	5/2001	Goble et al.
6,241,139	B1	6/2001	Milliman et al.
6,241,140	B1	6/2001	Adams et al.
6,241,723	B1	6/2001	Heim et al.

(56) **References Cited**

U.S. PATENT DOCUMENTS

6,245,084	B1	6/2001	Mark et al.
6,248,116	B1	6/2001	Chevillon et al.
6,248,117	B1	6/2001	Blatter
6,249,076	B1	6/2001	Madden et al.
6,249,105	B1	6/2001	Andrews et al.
6,250,532	B1	6/2001	Green et al.
6,258,107	B1	7/2001	Balázs et al.
6,261,286	B1	7/2001	Goble et al.
6,264,086	B1	7/2001	McGuckin, Jr.
6,264,087	B1	7/2001	Whitman
6,270,508	B1	8/2001	Klieman et al.
6,273,876	B1	8/2001	Klima et al.
6,273,897	B1	8/2001	Dalessandro et al.
6,277,114	B1	8/2001	Bullivant
6,293,942	B1	9/2001	Goble et al.
6,296,640	B1	10/2001	Wampler et al.
6,302,311	B1	10/2001	Adams et al.
6,305,891	B1	10/2001	Burlingame
6,306,134	B1	10/2001	Goble et al.
6,306,149	B1	10/2001	Meade
6,309,403	B1	10/2001	Minor et al.
6,315,184	B1	11/2001	Whitman
6,320,123	B1	11/2001	Reimers
6,322,494	B1	11/2001	Bullivant et al.
6,324,339	B1	11/2001	Hudson et al.
6,325,799	B1	12/2001	Goble
6,325,810	B1	12/2001	Hamilton et al.
6,330,965	B1	12/2001	Milliman et al.
6,331,181	B1	12/2001	Tierney et al.
6,331,761	B1	12/2001	Kumar et al.
6,333,029	B1	12/2001	Vyakarnam et al.
6,334,860	B1	1/2002	Dorn
6,334,861	B1	1/2002	Chandler et al.
6,336,926	B1	1/2002	Goble
6,338,737	B1	1/2002	Toledano
6,343,731	B1	2/2002	Adams et al.
6,346,077	B1	2/2002	Taylor et al.
6,352,503	B1	3/2002	Matsui et al.
6,352,532	B1	3/2002	Kramer et al.
6,355,699	B1	3/2002	Vyakarnam et al.
6,356,072	B1	3/2002	Chass
6,358,224	B1	3/2002	Tims et al.
6,364,877	B1	4/2002	Goble et al.
6,364,888	B1	4/2002	Niemeyer et al.
6,370,981	B2	4/2002	Watarai
6,373,152	B1	4/2002	Wang et al.
6,383,201	B1	5/2002	Dong
6,387,113	B1	5/2002	Hawkins et al.
6,387,114	B2	5/2002	Adams
6,391,038	B2	5/2002	Vargas et al.
6,392,854	B1	5/2002	O'Gorman
6,398,781	B1	6/2002	Goble et al.
6,398,797	B2	6/2002	Bombard et al.
6,402,766	B2	6/2002	Bowman et al.
6,406,440	B1	6/2002	Stefenchik
6,406,472	B1	6/2002	Jensen
6,409,724	B1	6/2002	Penny et al.
H2037	H	7/2002	Yates et al.
6,413,274	B1	7/2002	Pedros
6,416,486	B1	7/2002	Wampler
6,416,509	B1	7/2002	Goble et al.
6,419,695	B1	7/2002	Gabbay
6,423,079	B1	7/2002	Blake, III
RE37,814	E	8/2002	Allgeyer
6,428,070	B1	8/2002	Takanashi et al.
6,429,611	B1	8/2002	Li
6,430,298	B1	8/2002	Kettl et al.
6,432,065	B1	8/2002	Burdorff et al.
6,436,097	B1	8/2002	Nardella
6,436,107	B1	8/2002	Wang et al.
6,436,110	B2	8/2002	Bowman et al.
6,436,122	B1	8/2002	Frank et al.
6,439,439	B1	8/2002	Rickard et al.
6,439,446	B1	8/2002	Perry et al.
6,440,146	B2	8/2002	Nicholas et al.
6,441,577	B2	8/2002	Blumenkranz et al.
6,443,973	B1	9/2002	Whitman
6,447,518	B1	9/2002	Krause et al.
6,447,864	B2	9/2002	Johnson et al.
6,450,391	B1	9/2002	Kayan et al.
6,450,989	B2	9/2002	Dubrul et al.
6,454,781	B1	9/2002	Witt et al.
6,468,275	B1	10/2002	Wampler et al.
6,471,106	B1	10/2002	Reining
6,471,659	B2	10/2002	Eggers et al.
6,478,210	B2	11/2002	Adams et al.
6,482,200	B2	11/2002	Shippert
6,485,490	B2	11/2002	Wampler et al.
6,485,667	B1	11/2002	Tan
6,488,196	B1	12/2002	Fenton, Jr.
6,488,197	B1	12/2002	Whitman
6,491,201	B1	12/2002	Whitman
6,491,690	B1	12/2002	Goble et al.
6,491,701	B2	12/2002	Tierney et al.
6,492,785	B1	12/2002	Kasten et al.
6,494,896	B1	12/2002	D'Alessio et al.
6,498,480	B1	12/2002	Manara
6,500,176	B1	12/2002	Truckai et al.
6,500,194	B2	12/2002	Benderev et al.
6,503,257	B2	1/2003	Grant et al.
6,503,259	B2	1/2003	Huxel et al.
6,505,768	B2	1/2003	Whitman
6,510,854	B2	1/2003	Goble
6,511,468	B1	1/2003	Cragg et al.
6,512,360	B1	1/2003	Goto et al.
6,517,528	B1	2/2003	Pantages et al.
6,517,535	B2	2/2003	Edwards
6,517,565	B1	2/2003	Whitman et al.
6,517,566	B1	2/2003	Hovland et al.
6,522,101	B2	2/2003	Malackowski
6,527,782	B2	3/2003	Hogg et al.
6,527,785	B2	3/2003	Sancoff et al.
6,533,157	B1	3/2003	Whitman
6,533,784	B2	3/2003	Truckai et al.
6,535,764	B2	3/2003	Imran et al.
6,543,456	B1	4/2003	Freeman
6,545,384	B1	4/2003	Pelrine et al.
6,547,786	B1	4/2003	Goble
6,550,546	B2	4/2003	Thurler et al.
6,551,333	B2	4/2003	Kuhns et al.
6,554,861	B2	4/2003	Knox et al.
6,555,770	B2	4/2003	Kawase
6,558,378	B2	5/2003	Sherman et al.
6,558,379	B1	5/2003	Batchelor et al.
6,565,560	B1	5/2003	Goble et al.
6,566,619	B2	5/2003	Gillman et al.
6,569,085	B2	5/2003	Kortenbach et al.
6,569,171	B2	5/2003	DeGuillebon et al.
6,578,751	B2	6/2003	Hartwick
6,582,427	B1	6/2003	Goble et al.
6,582,441	B1	6/2003	He et al.
6,583,533	B2	6/2003	Pelrine et al.
6,538,643	B2	7/2003	Bolduc et al.
6,585,144	B2	7/2003	Adams et al.
6,587,750	B2	7/2003	Gerbi et al.
6,588,931	B2	7/2003	Betzner et al.
6,589,164	B1	7/2003	Flaherty
6,592,538	B1	7/2003	Hotchkiss et al.
6,592,597	B2	7/2003	Grant et al.
6,596,296	B1	7/2003	Nelson et al.
6,596,304	B1	7/2003	Bayon et al.
6,596,432	B2	7/2003	Kawakami et al.
D478,665	S	8/2003	Isaacs et al.
D478,986	S	8/2003	Johnston et al.
6,601,749	B2	8/2003	Sullivan et al.
6,602,252	B2	8/2003	Moilenauer
6,602,262	B2	8/2003	Griego et al.
6,605,078	B2	8/2003	Adams
6,605,669	B2	8/2003	Awokola et al.
6,607,475	B2	8/2003	Doyle et al.
6,611,793	B1	8/2003	Burnside et al.
6,613,069	B2	9/2003	Boyd et al.
6,616,686	B2	9/2003	Coleman et al.
6,619,529	B2	9/2003	Green et al.

(56) **References Cited**

U.S. PATENT DOCUMENTS

6,620,166 B1 9/2003 Wenstrom, Jr. et al.
6,626,834 B2 9/2003 Dunne et al.
6,629,630 B2 10/2003 Adams
6,629,974 B2 10/2003 Penny et al.
6,629,988 B2 10/2003 Weadock
6,635,838 B1 10/2003 Kornelson
6,636,412 B2 10/2003 Smith
6,638,108 B2 10/2003 Tachi
6,638,285 B2 10/2003 Gabbay
6,638,297 B1 10/2003 Huitema
RE38,335 E 11/2003 Aust et al.
6,641,528 B2 11/2003 Torii
6,644,532 B2 11/2003 Green et al.
6,645,201 B1 11/2003 Utley et al.
6,646,307 B1 11/2003 Yu et al.
6,648,816 B2 11/2003 Irion et al.
6,652,595 B1 11/2003 Nicolo
D484,243 S 12/2003 Ryan et al.
D484,595 S 12/2003 Ryan et al.
D484,596 S 12/2003 Ryan et al.
6,656,177 B2 12/2003 Truckai et al.
6,656,193 B2 12/2003 Grant et al.
6,663,623 B1 12/2003 Oyama et al.
6,663,641 B1 12/2003 Kovac et al.
6,666,854 B1 12/2003 Lange
6,666,875 B1 12/2003 Sakurai et al.
6,667,825 B2 12/2003 Lu et al.
6,669,073 B2 12/2003 Milliman et al.
6,671,185 B2 12/2003 Duval
D484,977 S 1/2004 Ryan et al.
6,676,660 B2 1/2004 Wampler et al.
6,679,269 B2 1/2004 Swanson
6,679,410 B2 1/2004 Würsch et al.
6,681,978 B2 1/2004 Geiste et al.
6,681,979 B2 1/2004 Whitman
6,682,527 B2 1/2004 Strul
6,682,528 B2 1/2004 Frazier et al.
6,685,727 B2 2/2004 Fisher et al.
6,689,153 B1 2/2004 Skiba
6,692,507 B2 2/2004 Pugsley et al.
6,695,198 B2 2/2004 Adams et al.
6,695,199 B2 2/2004 Whitman
6,695,774 B2 2/2004 Hale et al.
6,697,048 B2 2/2004 Rosenberg et al.
6,698,643 B2 3/2004 Whitman
6,699,235 B2 3/2004 Wallace et al.
6,704,210 B1 3/2004 Myers
6,705,503 B1 3/2004 Pedicini et al.
6,709,445 B2 3/2004 Boebel et al.
6,712,773 B1 3/2004 Viola
6,716,223 B2 4/2004 Leopold et al.
6,716,232 B1 4/2004 Vidal et al.
6,716,233 B1 4/2004 Whitman
6,722,552 B2 4/2004 Fenton, Jr.
6,723,087 B2 4/2004 O'Neill et al.
6,723,091 B2 4/2004 Goble et al.
6,726,697 B2 4/2004 Nicholas et al.
6,726,706 B2 4/2004 Dominguez
6,729,119 B2 5/2004 Schnipke et al.
6,736,825 B2 5/2004 Biatter et al.
6,736,854 B2 5/2004 Vadurro et al.
6,740,030 B2 5/2004 Martone et al.
6,747,121 B2 6/2004 Gogolewski
6,749,560 B1 6/2004 Konstorum et al.
6,752,768 B2 6/2004 Burdorff et al.
6,752,816 B2 6/2004 Culp et al.
6,755,195 B1 6/2004 Lemke et al.
6,755,338 B2 6/2004 Hahnen et al.
6,758,846 B2 7/2004 Goble et al.
6,761,685 B2 7/2004 Adams et al.
6,762,339 B1 7/2004 Klun et al.
6,764,445 B2 7/2004 Ramans et al.
6,767,352 B2 7/2004 Field et al.
6,767,356 B2 7/2004 Kanner et al.
6,769,590 B2 8/2004 Vresh et al.
6,769,594 B2 8/2004 Orban, III
6,770,027 B2 8/2004 Banik et al.
6,770,070 B1 8/2004 Balbierz
6,770,072 B1 8/2004 Truckai et al.
6,773,409 B2 8/2004 Truckai et al.
6,773,438 B1 8/2004 Knodel et al.
6,775,575 B2 8/2004 Bommannan et al.
6,777,838 B2 8/2004 Miekka et al.
6,780,151 B2 8/2004 Grabover et al.
6,780,180 B1 8/2004 Goble et al.
6,783,524 B2 8/2004 Anderson et al.
6,786,382 B1 9/2004 Hoffman
6,786,864 B2 9/2004 Matsuura et al.
6,786,896 B1 9/2004 Madani et al.
6,788,018 B1 9/2004 Blumenkranz
6,790,173 B2 9/2004 Saadat et al.
6,793,652 B1 9/2004 Whitman et al.
6,793,661 B2 9/2004 Hamilton et al.
6,793,663 B2 9/2004 Kneifel et al.
6,802,843 B2 10/2004 Truckai et al.
6,805,273 B2 10/2004 Bilotti et al.
6,806,808 B1 10/2004 Watters et al.
6,808,525 B2 10/2004 Latterell et al.
6,814,741 B2 11/2004 Bowman et al.
6,817,508 B1 11/2004 Racenet et al.
6,817,509 B2 11/2004 Geiste et al.
6,817,974 B2 11/2004 Cooper et al.
6,818,018 B1 11/2004 Sawhney
6,820,791 B2 11/2004 Adams
6,821,273 B2 11/2004 Mollenauer
6,821,282 B2 11/2004 Perry et al.
6,821,284 B2 11/2004 Sturtz et al.
6,827,246 B2 12/2004 Sullivan et al.
6,827,712 B2 12/2004 Tovey et al.
6,827,725 B2 12/2004 Batchelor et al.
6,828,902 B2 12/2004 Casden
6,830,174 B2 12/2004 Hillstead et al.
6,831,629 B2 12/2004 Nishino et al.
6,832,998 B2 12/2004 Goble
6,834,001 B2 12/2004 Myono
6,835,173 B2 12/2004 Couvillon, Jr.
6,835,199 B2 12/2004 McGuckin, Jr. et al.
6,835,336 B2 12/2004 Watt
6,837,846 B2 1/2005 Jaffe et al.
6,837,883 B2 1/2005 Moll et al.
6,838,493 B2 1/2005 Williams et al.
6,840,423 B2 1/2005 Adams et al.
6,843,403 B2 1/2005 Whitman
6,843,789 B2 1/2005 Goble
6,843,793 B2 1/2005 Brock et al.
6,846,307 B2 1/2005 Whitman et al.
6,846,308 B2 1/2005 Whitman et al.
6,846,309 B2 1/2005 Whitman et al.
6,849,071 B2 2/2005 Whitman et al.
6,850,817 B1 2/2005 Green
6,853,879 B2 2/2005 Sunaoshi
6,858,005 B2 2/2005 Ohline et al.
RE38,708 E 3/2005 Bolanos et al.
6,861,142 B1 3/2005 Wilkie et al.
6,863,694 B1 3/2005 Boyce et al.
6,866,178 B2 3/2005 Adams et al.
6,866,671 B2 3/2005 Tierney et al.
6,867,248 B1 3/2005 Martin et al.
6,869,430 B2 3/2005 Balbierz et al.
6,869,435 B2 3/2005 Blake, III
6,872,214 B2 3/2005 Sonnenschein et al.
6,874,669 B2 4/2005 Adams et al.
6,877,647 B2 4/2005 Green et al.
6,878,106 B1 4/2005 Herrmann
6,889,116 B2 5/2005 Jinno
6,893,435 B2 5/2005 Goble
6,899,538 B2 5/2005 Matoba
6,905,057 B2 6/2005 Swayze et al.
6,905,497 B2 6/2005 Truckai et al.
6,905,498 B2 6/2005 Hooven
6,908,472 B2 6/2005 Wiener et al.
6,911,033 B2 6/2005 de Guillebon et al.
6,911,916 B1 6/2005 Wang et al.
6,913,579 B2 7/2005 Truckai et al.

(56) **References Cited**

U.S. PATENT DOCUMENTS

6,913,608 B2 7/2005 Liddicoat et al.
6,913,613 B2 7/2005 Schwarz et al.
6,921,397 B2 7/2005 Corcoran et al.
6,921,412 B1 7/2005 Black et al.
6,923,093 B2 8/2005 Ullah
6,923,803 B2 8/2005 Goble
6,926,716 B2 8/2005 Baker et al.
6,929,641 B2 8/2005 Goble et al.
6,929,644 B2 8/2005 Truckai et al.
6,931,830 B2 8/2005 Liao
6,932,218 B2 8/2005 Kosann et al.
6,932,810 B2 8/2005 Ryan
6,936,042 B2 8/2005 Wallace et al.
6,936,948 B2 8/2005 Bell et al.
6,939,358 B2 9/2005 Palacios et al.
6,942,662 B2 9/2005 Goble et al.
6,945,444 B2 9/2005 Gresham et al.
6,945,981 B2 9/2005 Donofrio et al.
6,953,138 B1 10/2005 Dworak et al.
6,953,139 B2 10/2005 Milliman et al.
6,958,035 B2 10/2005 Friedman et al.
6,959,851 B2 11/2005 Heinrich
6,959,852 B2 * 11/2005 Shelton, IV A61B 17/07207 227/175.1
6,960,107 B1 11/2005 Schaub et al.
6,960,163 B2 11/2005 Ewers et al.
6,960,220 B2 11/2005 Marino et al.
6,962,587 B2 11/2005 Johnson et al.
6,963,792 B1 11/2005 Green
6,964,363 B2 11/2005 Wales et al.
6,966,907 B2 11/2005 Goble
6,966,909 B2 11/2005 Marshall et al.
6,971,988 B2 12/2005 Orban, III
6,972,199 B2 12/2005 Lebouitz et al.
6,974,462 B2 12/2005 Sater
6,978,921 B2 12/2005 Shelton, IV et al.
6,978,922 B2 12/2005 Bilotti et al.
6,981,628 B2 * 1/2006 Wales A61B 17/07207 227/175.1
6,981,941 B2 1/2006 Whitman et al.
6,981,978 B2 1/2006 Gannoe
6,984,203 B2 1/2006 Tartaglia et al.
6,984,231 B2 1/2006 Goble et al.
6,986,451 B1 1/2006 Mastri et al.
6,988,649 B2 1/2006 Shelton, IV et al.
6,988,650 B2 1/2006 Schwemberger et al.
6,990,796 B2 1/2006 Schnipke et al.
6,993,413 B2 1/2006 Sunaoshi
6,994,708 B2 2/2006 Manzo
6,995,729 B2 2/2006 Govari et al.
6,997,931 B2 2/2006 Sauer et al.
6,998,816 B2 2/2006 Wieck et al.
7,000,818 B2 2/2006 Shelton, IV et al.
7,000,819 B2 * 2/2006 Swayze A61B 17/07207 227/176.1
7,001,380 B2 2/2006 Goble
7,001,408 B2 2/2006 Knodel et al.
7,008,435 B2 3/2006 Cummins
7,009,039 B2 3/2006 Yayon et al.
7,011,657 B2 3/2006 Truckai et al.
7,018,357 B2 3/2006 Emmons
7,018,390 B2 3/2006 Turovskiy et al.
7,021,669 B1 4/2006 Lindermeir et al.
7,025,743 B2 4/2006 Mann et al.
7,029,435 B2 4/2006 Nakao
7,029,439 B2 4/2006 Roberts et al.
7,032,798 B2 4/2006 Whitman et al.
7,032,799 B2 4/2006 Viola et al.
7,033,356 B2 4/2006 Latterell et al.
7,036,680 B1 5/2006 Flannery
7,037,344 B2 5/2006 Kagan et al.
7,041,102 B2 5/2006 Truckai et al.
7,041,868 B2 5/2006 Greene et al.
7,043,852 B2 5/2006 Hayashida et al.
7,044,350 B2 5/2006 Kameyama et al.
7,044,352 B2 5/2006 Shelton, IV et al.
7,044,353 B2 5/2006 Mastri et al.
7,048,687 B1 5/2006 Reuss et al.
7,048,745 B2 5/2006 Tierney et al.
7,052,494 B2 5/2006 Goble et al.
7,052,499 B2 5/2006 Steger et al.
7,055,730 B2 6/2006 Ehrenfels et al.
7,055,731 B2 6/2006 Shelton, IV et al.
7,056,284 B2 6/2006 Martone et al.
7,056,330 B2 6/2006 Gayton
7,059,331 B2 6/2006 Adams et al.
7,059,508 B2 6/2006 Shelton, IV et al.
7,063,671 B2 6/2006 Couvillon, Jr.
7,063,712 B2 6/2006 Vargas et al.
7,066,879 B2 6/2006 Fowler et al.
7,066,944 B2 6/2006 Laufer et al.
7,067,038 B2 6/2006 Trokhan et al.
7,070,083 B2 7/2006 Jankowski
7,070,559 B2 7/2006 Adams et al.
7,070,597 B2 7/2006 Truckai et al.
7,071,287 B2 7/2006 Rhine et al.
7,075,770 B1 7/2006 Smith
7,077,856 B2 7/2006 Whitman
7,080,769 B2 7/2006 Vresh et al.
7,081,114 B2 7/2006 Rashidi
7,083,073 B2 8/2006 Yoshie et al.
7,083,075 B2 8/2006 Swayze et al.
7,083,571 B2 8/2006 Wang et al.
7,083,615 B2 8/2006 Peterson et al.
7,083,619 B2 8/2006 Truckai et al.
7,083,620 B2 8/2006 Jahns et al.
7,087,054 B2 8/2006 Truckai et al.
7,087,071 B2 8/2006 Nicholas et al.
7,090,637 B2 8/2006 Danitz et al.
7,090,673 B2 8/2006 Dycus et al.
7,090,683 B2 8/2006 Brock et al.
7,090,684 B2 8/2006 McGuckin, Jr. et al.
7,094,202 B2 8/2006 Nobis et al.
7,094,247 B2 8/2006 Monassevitch et al.
7,097,089 B2 8/2006 Marczyk
7,097,644 B2 8/2006 Long
7,097,650 B2 8/2006 Weller et al.
7,098,794 B2 8/2006 Lindsay et al.
7,100,949 B2 9/2006 Williams et al.
7,101,394 B2 9/2006 Hamm et al.
7,104,741 B2 9/2006 Krohn
7,108,695 B2 9/2006 Witt et al.
7,108,701 B2 9/2006 Evens et al.
7,108,709 B2 9/2006 Cummins
7,111,769 B2 9/2006 Wales et al.
7,112,214 B2 9/2006 Peterson et al.
RE39,358 E 10/2006 Goble
7,114,642 B2 10/2006 Whitman
7,118,582 B1 10/2006 Wang et al.
7,121,446 B2 10/2006 Arad et al.
7,122,028 B2 10/2006 Looper et al.
7,125,409 B2 10/2006 Truckai et al.
7,126,303 B2 10/2006 Farritor et al.
7,126,879 B2 10/2006 Snyder
7,128,253 B2 10/2006 Mastri et al.
7,128,254 B2 * 10/2006 Shelton, IV A61B 17/07207 227/175.1
7,128,748 B2 10/2006 Mooradian et al.
7,131,445 B2 11/2006 Amoah
7,133,601 B2 11/2006 Phillips et al.
7,134,587 B2 11/2006 Schwemberger et al.
7,137,980 B2 11/2006 Buysse et al.
7,137,981 B2 11/2006 Long
7,139,016 B2 11/2006 Squilla et al.
7,140,527 B2 11/2006 Ehrenfels et al.
7,140,528 B2 11/2006 Shelton, IV
7,143,923 B2 12/2006 Shelton, IV et al.
7,143,924 B2 12/2006 Scirica et al.
7,143,925 B2 * 12/2006 Shelton, IV A61B 17/07207 227/175.1
7,143,926 B2 12/2006 Shelton, IV et al.
7,147,138 B2 12/2006 Shelton, IV
7,147,139 B2 12/2006 Schwemberger et al.
7,147,140 B2 12/2006 Wukusick et al.

(56) **References Cited**

U.S. PATENT DOCUMENTS

7,147,637 B2 12/2006 Goble
7,147,650 B2 12/2006 Lee
7,150,748 B2 12/2006 Ebbutt et al.
7,153,300 B2 12/2006 Goble
7,155,316 B2 12/2006 Sutherland et al.
7,156,863 B2 1/2007 Sonnenschein et al.
7,159,750 B2 1/2007 Racenet et al.
7,160,296 B2 1/2007 Pearson et al.
7,160,299 B2 1/2007 Baily
7,161,036 B2 1/2007 Oikawa et al.
7,166,133 B2 1/2007 Evans et al.
7,168,604 B2 1/2007 Milliman et al.
7,172,104 B2 2/2007 Scirica et al.
7,172,593 B2 2/2007 Trieu et al.
7,179,223 B2 2/2007 Motoki et al.
7,179,267 B2 2/2007 Nolan et al.
7,182,239 B1 2/2007 Myers
7,182,763 B2 2/2007 Nardella
7,183,737 B2 2/2007 Kitagawa
7,188,758 B2 3/2007 Viola et al.
7,189,207 B2 3/2007 Viola
7,195,627 B2 3/2007 Amoah et al.
7,199,537 B2 4/2007 Okamura et al.
7,202,653 B2 4/2007 Pai
7,204,835 B2 4/2007 Latterell et al.
7,207,233 B2 4/2007 Wadge
7,207,471 B2 4/2007 Heinrich et al.
7,207,472 B2 4/2007 Wukusick et al.
7,207,556 B2 4/2007 Saitoh et al.
7,208,005 B2 4/2007 Frecker et al.
7,210,609 B2 5/2007 Leiboff et al.
7,211,081 B2 5/2007 Goble
7,211,084 B2 5/2007 Goble et al.
7,211,092 B2 5/2007 Hughett
7,211,979 B2 5/2007 Khatib et al.
7,213,736 B2 5/2007 Wales et al.
7,214,224 B2 5/2007 Goble
7,215,517 B2 5/2007 Takamatsu
7,217,285 B2 5/2007 Vargas et al.
7,220,260 B2 5/2007 Fleming et al.
7,220,272 B2 5/2007 Weadock
7,225,963 B2 6/2007 Scirica
7,225,964 B2 6/2007 Mastri et al.
7,234,624 B2 6/2007 Gresham et al.
7,235,089 B1 6/2007 McGuckin, Jr.
7,235,302 B2 6/2007 Jing et al.
7,237,708 B1 7/2007 Guy et al.
7,238,195 B2 7/2007 Viola
7,238,901 B2 7/2007 Kim et al.
7,241,288 B2 7/2007 Braun
7,246,734 B2 7/2007 Shelton, IV
7,247,161 B2 7/2007 Johnston et al.
7,249,267 B2 7/2007 Chapius
7,252,660 B2 8/2007 Kunz
7,255,696 B2 8/2007 Goble et al.
7,256,695 B2 8/2007 Hamel et al.
7,258,262 B2 8/2007 Mastri et al.
7,258,546 B2 8/2007 Beier et al.
7,260,431 B2 8/2007 Libbus et al.
7,265,374 B2 9/2007 Lee et al.
7,267,679 B2 9/2007 McGuckin, Jr. et al.
7,273,483 B2 9/2007 Wiener et al.
7,278,562 B2 10/2007 Mastri et al.
7,278,563 B1 10/2007 Green
7,278,949 B2 10/2007 Bader
7,278,994 B2 10/2007 Goble
7,282,048 B2 10/2007 Goble et al.
7,286,850 B2 10/2007 Frielink et al.
7,287,682 B1 10/2007 Ezzat et al.
7,293,685 B2 11/2007 Ehrenfels et al.
7,295,893 B2 11/2007 Sunaoshi
7,295,907 B2 11/2007 Lu et al.
7,296,722 B2 11/2007 Ivanko
7,296,724 B2 11/2007 Green et al.
7,297,149 B2 11/2007 Vitali et al.
7,300,373 B2 11/2007 Jinno et al.
7,300,450 B2 11/2007 Vleugels et al.
7,303,106 B2 12/2007 Milliman et al.
7,303,107 B2 12/2007 Milliman et al.
7,303,108 B2 12/2007 Shelton, IV
7,303,502 B2 12/2007 Thompson
7,303,556 B2 12/2007 Metzger
7,306,597 B2 12/2007 Manzo
7,308,998 B2 12/2007 Mastri et al.
7,322,859 B2 1/2008 Evans
7,322,975 B2 1/2008 Goble et al.
7,322,994 B2 1/2008 Nicholas et al.
7,324,572 B2 1/2008 Chang
7,326,203 B2 2/2008 Papineau et al.
7,326,213 B2 2/2008 Benderev et al.
7,328,828 B2 2/2008 Ortiz et al.
7,328,829 B2 2/2008 Arad et al.
7,330,004 B2 2/2008 DeJonge et al.
7,331,340 B2 2/2008 Barney
7,334,717 B2 2/2008 Rethy et al.
7,334,718 B2 2/2008 McAlister et al.
7,335,199 B2 2/2008 Goble et al.
7,336,048 B2 2/2008 Lohr
7,336,184 B2 2/2008 Smith et al.
7,338,513 B2 3/2008 Lee et al.
7,341,591 B2 3/2008 Grinberg
7,343,920 B2 3/2008 Toby et al.
7,344,532 B2 3/2008 Goble et al.
7,344,533 B2 3/2008 Pearson et al.
7,346,344 B2 3/2008 Fontaine
7,348,763 B1 3/2008 Reinhart et al.
RE40,237 E 4/2008 Bilotti et al.
7,351,258 B2 4/2008 Ricotta et al.
7,354,447 B2 4/2008 Shelton, IV et al.
7,354,502 B2 4/2008 Polat et al.
7,357,287 B2 4/2008 Shelton, IV et al.
7,357,806 B2 4/2008 Rivera et al.
7,361,195 B2 4/2008 Schwartz et al.
7,364,060 B2 4/2008 Milliman
7,364,061 B2 * 4/2008 Swayze A61B 17/07207 227/175.1
7,377,918 B2 5/2008 Amoah
7,377,928 B2 5/2008 Zubik et al.
7,330,695 B2 6/2008 Doll et al.
7,330,696 B2 6/2008 Shelton, IV et al.
7,384,417 B2 6/2008 Cucin
7,386,365 B2 6/2008 Nixon
7,386,730 B2 6/2008 Uchikubo
7,388,217 B2 6/2008 Buschbeck et al.
7,388,484 B2 6/2008 Hsu
7,391,173 B2 6/2008 Schena
7,396,356 B2 7/2008 Mollenauer
7,397,364 B2 7/2008 Govari
7,398,907 B2 7/2008 Racenet et al.
7,398,908 B2 7/2008 Holsten et al.
7,400,752 B2 7/2008 Zacharias
7,401,721 B2 7/2008 Holsten et al.
7,404,508 B2 7/2008 Smith et al.
7,404,509 B2 7/2008 Ortiz et al.
7,404,822 B2 7/2008 Viart et al.
7,407,074 B2 8/2008 Ortiz et al.
7,407,075 B2 8/2008 Holsten et al.
7,407,076 B2 8/2008 Racenet et al.
7,407,077 B2 8/2008 Ortiz et al.
7,407,078 B2 8/2008 Shelton, IV et al.
7,410,086 B2 8/2008 Ortiz et al.
7,413,563 B2 8/2008 Corcoran et al.
7,416,101 B2 * 8/2008 Shelton, IV A61B 17/07207 227/175.1
7,418,078 B2 8/2008 Blanz et al.
RE40,514 E 9/2008 Mastri et al.
7,419,080 B2 9/2008 Smith et al.
7,419,081 B2 9/2008 Ehrenfels et al.
7,419,495 B2 9/2008 Menn et al.
7,422,136 B1 9/2008 Marczyk
7,422,138 B2 9/2008 Bilotti et al.
7,422,139 B2 9/2008 Shelton, IV et al.
7,424,965 B2 9/2008 Racenet et al.
7,427,607 B2 9/2008 Suzuki

(56) **References Cited**

U.S. PATENT DOCUMENTS

7,431,188 B1 10/2008 Marczyk
7,431,189 B2 10/2008 Shelton, IV et al.
7,431,694 B2 10/2008 Stefanchik et al.
7,431,730 B2 10/2008 Viola
7,434,715 B2 10/2008 Shelton, IV et al.
7,434,717 B2 10/2008 Shelton, IV et al.
7,438,209 B1 10/2008 Hess et al.
7,438,718 B2 10/2008 Milliman et al.
7,439,354 B2 10/2008 Lenges et al.
7,441,684 B2 10/2008 Shelton, IV et al.
7,441,685 B1 10/2008 Boudreaux
7,442,201 B2 10/2008 Pugsley et al.
7,443,547 B2 10/2008 Moreno et al.
7,448,525 B2 11/2008 Shelton, IV et al.
7,451,904 B2 11/2008 Shelton, IV
7,455,208 B2 11/2008 Wales et al.
7,455,676 B2 11/2008 Holsten et al.
7,455,682 B2 11/2008 Viola
7,461,767 B2 12/2008 Viola et al.
7,462,187 B2 12/2008 Johnston et al.
7,464,846 B2 12/2008 Shelton, IV et al.
7,464,847 B2 12/2008 Viola et al.
7,464,849 B2 12/2008 Shelton, IV et al.
7,467,740 B2 12/2008 Shelton, IV et al.
7,467,849 B2 12/2008 Silverbrook et al.
7,472,814 B2 1/2009 Mastri et al.
7,472,815 B2 1/2009 Shelton, IV et al.
7,472,816 B2 1/2009 Holsten et al.
7,473,253 B2 1/2009 Dycus et al.
7,473,263 B2 1/2009 Johnston et al.
7,476,237 B2 1/2009 Taniguchi et al.
7,479,608 B2 1/2009 Smith
7,481,347 B2 1/2009 Roy
7,481,348 B2 1/2009 Marczyk
7,481,349 B2 1/2009 Holsten et al.
7,481,824 B2 1/2009 Boudreaux et al.
7,485,133 B2 2/2009 Cannon et al.
7,485,142 B2 2/2009 Milo
7,487,899 B2 2/2009 Shelton, IV et al.
7,490,749 B2 * 2/2009 Schall A61B 17/07207 227/176.1
7,494,039 B2 2/2009 Racenet et al.
7,494,499 B2 2/2009 Nagase et al.
7,494,501 B2 2/2009 Ahlberg et al.
7,500,979 B2 3/2009 Hueil et al.
7,501,198 B2 3/2009 Barlev et al.
7,503,474 B2 3/2009 Hillstead et al.
7,506,790 B2 3/2009 Shelton, IV
7,506,791 B2 3/2009 Omaits et al.
7,507,202 B2 3/2009 Schoellhorn
7,510,107 B2 3/2009 Timm et al.
7,510,566 B2 3/2009 Jacobs et al.
7,513,408 B2 4/2009 Shelton, IV et al.
7,517,356 B2 4/2009 Heinrich
7,524,320 B2 4/2009 Tierney et al.
7,530,984 B2 5/2009 Sonnenschein et al.
7,530,985 B2 5/2009 Takemoto et al.
7,533,906 B2 5/2009 Luettgen et al.
7,534,259 B2 5/2009 Lashinski et al.
7,540,867 B2 6/2009 Jinno et al.
7,542,807 B2 6/2009 Bertolero et al.
7,546,939 B2 6/2009 Adams et al.
7,546,940 B2 6/2009 Milliman et al.
7,547,312 B2 6/2009 Bauman et al.
7,549,563 B2 6/2009 Mather et al.
7,549,564 B2 6/2009 Boudreaux
7,549,998 B2 6/2009 Braun
7,552,854 B2 6/2009 Wixey et al.
7,553,173 B2 6/2009 Kowalick
7,556,185 B2 7/2009 Viola
7,556,186 B2 7/2009 Milliman
7,556,647 B2 7/2009 Drews et al.
7,559,449 B2 7/2009 Viola
7,559,450 B2 7/2009 Wales et al.
7,559,452 B2 7/2009 Wales et al.
7,559,937 B2 7/2009 de la Torre et al.
7,562,910 B2 7/2009 Kertesz et al.
7,563,862 B2 7/2009 Sieg et al.
7,565,993 B2 7/2009 Milliman et al.
7,566,300 B2 7/2009 Devierre et al.
7,567,045 B2 7/2009 Fristedt
7,568,603 B2 8/2009 Shelton, IV et al.
7,568,604 B2 8/2009 Ehrenfels et al.
7,568,619 B2 8/2009 Todd et al.
7,575,144 B2 8/2009 Ortiz et al.
7,533,063 B2 9/2009 Dooley
7,588,174 B2 9/2009 Holsten et al.
7,588,175 B2 9/2009 Timm et al.
7,588,176 B2 9/2009 Timm et al.
7,588,177 B2 9/2009 Racenet
7,591,783 B2 9/2009 Boulais et al.
7,591,818 B2 9/2009 Bertolero et al.
7,597,229 B2 10/2009 Boudreaux et al.
7,597,230 B2 10/2009 Racenet et al.
7,597,693 B2 10/2009 Garrison
7,600,663 B2 10/2009 Green
7,604,150 B2 10/2009 Boudreaux
7,604,151 B2 10/2009 Hess et al.
7,607,557 B2 10/2009 Shelton, IV et al.
7,611,038 B2 11/2009 Racenet et al.
7,611,474 B2 11/2009 Hibner et al.
7,615,003 B2 11/2009 Stefanchik et al.
7,615,067 B2 11/2009 Lee et al.
7,617,961 B2 11/2009 Viola
7,624,902 B2 12/2009 Marczyk et al.
7,624,903 B2 12/2009 Green et al.
7,625,370 B2 12/2009 Hart et al.
7,631,793 B2 12/2009 Rethy et al.
7,631,794 B2 12/2009 Rethy et al.
7,635,074 B2 12/2009 Olson et al.
7,637,409 B2 12/2009 Marczyk
7,637,410 B2 12/2009 Marczyk
7,638,958 B2 12/2009 Philipp et al.
7,641,091 B2 1/2010 Olson et al.
7,641,092 B2 1/2010 Kruszynski et al.
7,641,093 B2 1/2010 Doll et al.
7,641,095 B2 1/2010 Viola
7,644,783 B2 1/2010 Roberts et al.
7,644,848 B2 1/2010 Swayze et al.
7,645,230 B2 1/2010 Mikkaichi et al.
7,648,519 B2 1/2010 Lee et al.
7,650,185 B2 1/2010 Maile et al.
7,651,017 B2 1/2010 Ortiz et al.
7,651,498 B2 1/2010 Shifrin et al.
7,654,431 B2 2/2010 Hueil et al.
7,655,288 B2 2/2010 Bauman et al.
7,656,131 B2 2/2010 Embrey et al.
7,658,311 B2 2/2010 Boudreaux
7,658,312 B2 2/2010 Vidal et al.
7,659,219 B2 2/2010 Biran et al.
7,662,161 B2 2/2010 Briganti et al.
7,665,646 B2 2/2010 Prommersberger
7,665,647 B2 2/2010 Shelton, IV et al.
7,669,746 B2 3/2010 Shelton, IV
7,669,747 B2 3/2010 Weisenburgh, II et al.
7,670,334 B2 3/2010 Hueil et al.
7,673,780 B2 3/2010 Shelton, IV et al.
7,673,781 B2 3/2010 Swayze et al.
7,673,782 B2 3/2010 Hess et al.
7,673,783 B2 3/2010 Morgan et al.
7,674,253 B2 3/2010 Fisher et al.
7,674,255 B2 3/2010 Braun
7,674,263 B2 3/2010 Ryan
7,674,270 B2 3/2010 Layer
7,682,307 B2 3/2010 Danitz et al.
7,682,367 B2 3/2010 Shah et al.
7,686,201 B2 3/2010 Csiky
7,686,804 B2 3/2010 Johnson et al.
7,686,826 B2 3/2010 Lee et al.
7,688,028 B2 3/2010 Phillips et al.
7,691,098 B2 4/2010 Wallace et al.
7,691,103 B2 4/2010 Fernandez et al.
7,691,106 B2 4/2010 Schenberger et al.
7,694,865 B2 4/2010 Scirica

(56) **References Cited**

U.S. PATENT DOCUMENTS

7,695,485 B2 4/2010 Whitman et al.
7,699,204 B2 4/2010 Viola
7,699,835 B2 4/2010 Lee et al.
7,699,844 B2 4/2010 Utley et al.
7,699,846 B2 4/2010 Ryan
7,699,856 B2 4/2010 Van Wyk et al.
7,699,859 B2 4/2010 Bombard et al.
7,699,860 B2 4/2010 Huitema et al.
7,703,653 B2 4/2010 Shah et al.
7,708,180 B2 5/2010 Murray et al.
7,708,181 B2 5/2010 Cole et al.
7,708,758 B2 5/2010 Lee et al.
7,712,182 B2 5/2010 Zeiler et al.
7,714,239 B2 5/2010 Smith
7,717,312 B2 5/2010 Beetel
7,717,313 B2 5/2010 Criscuolo et al.
7,717,846 B2 5/2010 Zirps et al.
7,718,180 B2 5/2010 Karp
7,718,556 B2 5/2010 Matsuda et al.
7,721,930 B2 5/2010 McKenna et al.
7,721,931 B2 5/2010 Shelton, IV et al.
7,721,933 B2 5/2010 Ehrenfels et al.
7,721,934 B2 5/2010 Shelton, IV et al.
7,721,936 B2 5/2010 Shelton, IV et al.
7,722,527 B2 5/2010 Bouchier et al.
7,722,607 B2 5/2010 Dumbauld et al.
7,722,610 B2 5/2010 Viola et al.
7,726,537 B2 6/2010 Olson et al.
7,726,538 B2 6/2010 Holsten et al.
7,726,539 B2 6/2010 Holsten et al.
7,727,954 B2 6/2010 McKay
7,729,742 B2 6/2010 Govari
7,731,072 B2 6/2010 Timm et al.
7,731,073 B2 6/2010 Wixey et al.
7,731,724 B2 6/2010 Huitema et al.
7,735,703 B2 6/2010 Morgan et al.
7,736,374 B2 6/2010 Vaughan et al.
7,738,971 B2 6/2010 Swayze et al.
7,740,159 B2 6/2010 Shelton, IV et al.
7,742,036 B2 6/2010 Grant et al.
7,743,960 B2 6/2010 Whitman et al.
7,744,624 B2 6/2010 Bettuchi
7,744,627 B2 6/2010 Orban, III et al.
7,744,628 B2 6/2010 Viola
7,748,587 B2 7/2010 Haramiishi et al.
7,749,204 B2 7/2010 Dhanaraj et al.
7,751,870 B2 7/2010 Whitman
7,753,245 B2 7/2010 Boudreaux et al.
7,753,246 B2 7/2010 Scirica
7,753,904 B2 7/2010 Shelton, IV et al.
7,758,612 B2 7/2010 Shipp
7,734,662 B2 8/2010 Wales et al.
7,734,663 B2 8/2010 Shelton, IV
7,766,207 B2 8/2010 Mather et al.
7,766,209 B2 8/2010 Baxter, III et al.
7,766,210 B2 8/2010 Shelton, IV et al.
7,766,821 B2 8/2010 Brunnen et al.
7,766,894 B2 8/2010 Weitzner et al.
7,770,773 B2 8/2010 Whitman et al.
7,770,774 B2 8/2010 Mastri et al.
7,770,775 B2 8/2010 Shelton, IV et al.
7,770,776 B2 8/2010 Chen et al.
7,771,396 B2 8/2010 Stefanchik et al.
7,772,720 B2 8/2010 McGee et al.
7,776,037 B2 8/2010 Odom
7,776,060 B2 8/2010 Mooradian et al.
7,778,004 B2 8/2010 Nerheim et al.
7,780,054 B2 8/2010 Wales
7,780,055 B2 8/2010 Scirica et al.
7,780,663 B2 8/2010 Yates et al.
7,780,685 B2 8/2010 Hunt et al.
7,787,256 B2 8/2010 Chan et al.
7,789,875 B2 9/2010 Brock et al.
7,789,883 B2 9/2010 Takashino et al.
7,789,889 B2 9/2010 Zubik et al.
7,793,812 B2 9/2010 Moore et al.
7,794,475 B2 9/2010 Hess et al.
7,798,386 B2 9/2010 Schall et al.
7,799,039 B2 9/2010 Shelton, IV et al.
7,799,044 B2 9/2010 Johnston et al.
7,799,965 B2 9/2010 Patel et al.
7,803,151 B2 9/2010 Whitman
7,806,891 B2 10/2010 Nowlin et al.
7,810,690 B2 10/2010 Bilotti et al.
7,810,691 B2 10/2010 Boyden et al.
7,810,692 B2 10/2010 Hall et al.
7,810,693 B2 10/2010 Broehl et al.
7,815,092 B2 10/2010 Whitman et al.
7,815,565 B2 10/2010 Stefanchik et al.
7,819,296 B2 10/2010 Hueil et al.
7,819,297 B2 10/2010 Doll et al.
7,819,298 B2 * 10/2010 Hall A61B 17/07207 227/175.2
7,819,299 B2 10/2010 Shelton, IV et al.
7,819,884 B2 10/2010 Lee et al.
7,819,886 B2 10/2010 Whitfield et al.
7,823,592 B2 11/2010 Bettuchi et al.
7,823,760 B2 11/2010 Zemlok et al.
7,824,401 B2 11/2010 Manzo et al.
7,824,426 B2 11/2010 Racenet et al.
7,828,189 B2 11/2010 Holsten et al.
7,828,794 B2 11/2010 Sartor
7,828,808 B2 11/2010 Hinman et al.
7,831,292 B2 11/2010 Quaid et al.
7,832,408 B2 11/2010 Shelton, IV et al.
7,832,611 B2 11/2010 Boyden et al.
7,832,612 B2 11/2010 Baxter, III et al.
7,833,234 B2 11/2010 Bailly et al.
7,836,400 B2 11/2010 May et al.
7,837,079 B2 11/2010 Holsten et al.
7,837,080 B2 11/2010 Schwemberger
7,837,081 B2 11/2010 Holsten et al.
7,837,694 B2 11/2010 Tethrake et al.
7,838,789 B2 11/2010 Stoffers et al.
7,841,503 B2 11/2010 Sonnenschein et al.
7,842,025 B2 11/2010 Coleman et al.
7,842,028 B2 11/2010 Lee
7,845,533 B2 12/2010 Marczyk et al.
7,845,534 B2 12/2010 Viola et al.
7,845,535 B2 12/2010 Scircia
7,845,536 B2 12/2010 Viola et al.
7,845,537 B2 12/2010 Shelton, IV et al.
7,846,149 B2 12/2010 Jankowski
7,850,642 B2 12/2010 Moll et al.
7,850,982 B2 12/2010 Stopek et al.
7,854,736 B2 12/2010 Ryan
7,857,183 B2 12/2010 Shelton, IV
7,857,185 B2 12/2010 Swayze et al.
7,857,186 B2 12/2010 Baxter, III et al.
7,857,813 B2 12/2010 Schmitz et al.
7,861,906 B2 1/2011 Doll et al.
7,862,579 B2 1/2011 Ortiz et al.
7,866,525 B2 1/2011 Scirica
7,866,527 B2 * 1/2011 Hall A61B 17/07207 227/175.2
7,866,528 B2 1/2011 Olson et al.
7,870,989 B2 1/2011 Viola et al.
7,871,418 B2 1/2011 Thompson et al.
7,879,070 B2 2/2011 Ortiz et al.
7,883,465 B2 2/2011 Donofrio et al.
7,886,951 B2 2/2011 Hessler
7,886,952 B2 2/2011 Scirica et al.
7,887,530 B2 2/2011 Zemlok et al.
7,887,535 B2 2/2011 Lands et al.
7,891,531 B1 2/2011 Ward
7,891,532 B2 2/2011 Mastri et al.
7,892,245 B2 2/2011 Liddicoat et al.
7,893,586 B2 2/2011 West et al.
7,896,214 B2 3/2011 Farascioni
7,896,215 B2 3/2011 Adams
7,896,877 B2 3/2011 Hall et al.
7,896,895 B2 3/2011 Boudreaux et al.
7,900,805 B2 3/2011 Shelton, IV et al.
7,905,380 B2 3/2011 Shelton, IV et al.

(56) **References Cited**

U.S. PATENT DOCUMENTS

7,905,381 B2 3/2011 Baxter, III et al.
7,905,889 B2 3/2011 Catanese, III et al.
7,905,902 B2 3/2011 Huitema et al.
7,909,191 B2 3/2011 Baker et al.
7,909,220 B2 3/2011 Viola
7,909,221 B2 3/2011 Viola et al.
7,913,891 B2 3/2011 Doll et al.
7,913,893 B2 3/2011 Mastri et al.
7,914,543 B2 3/2011 Roth et al.
7,914,551 B2 3/2011 Ortiz et al.
7,918,230 B2 4/2011 Whitman et al.
7,918,376 B1 4/2011 Knodel et al.
7,918,377 B2 4/2011 Measamer et al.
7,918,848 B2 4/2011 Lau et al.
7,918,867 B2 4/2011 Dana et al.
7,922,061 B2 4/2011 Shelton, IV et al.
7,922,063 B2 4/2011 Zemlok et al.
7,922,743 B2 4/2011 Heinrich et al.
7,923,144 B2 4/2011 Kohn et al.
7,926,691 B2 4/2011 Viola et al.
7,927,328 B2 4/2011 Orszulak et al.
7,928,281 B2 4/2011 Augustine
7,930,065 B2 4/2011 Larkin et al.
7,931,660 B2 4/2011 Aranyi et al.
7,931,695 B2 4/2011 Ringeisen
7,934,630 B2 5/2011 Shelton, IV et al.
7,934,631 B2 5/2011 Balbierz et al.
7,935,773 B2 5/2011 Hadba et al.
7,938,307 B2 5/2011 Bettuchi
7,941,865 B2 5/2011 Seman, Jr. et al.
7,942,303 B2 5/2011 Shah
7,942,890 B2 5/2011 D'Agostino et al.
7,944,175 B2 5/2011 Mori et al.
7,945,792 B2 5/2011 Cherpantier
7,950,560 B2 5/2011 Zemlok et al.
7,950,561 B2 5/2011 Aranyi
7,951,071 B2 5/2011 Whitman et al.
7,951,166 B2 5/2011 Orban et al.
7,954,682 B2 6/2011 Giordano et al.
7,954,684 B2 6/2011 Boudreaux
7,954,686 B2 6/2011 Baxter, III et al.
7,954,687 B2 6/2011 Zemlok et al.
7,955,257 B2 6/2011 Frasier et al.
7,955,322 B2 6/2011 Devengenzo et al.
7,955,380 B2 6/2011 Chu et al.
7,959,050 B2 6/2011 Smith et al.
7,959,051 B2 6/2011 Smith et al.
7,959,052 B2 6/2011 Sonnenschein et al.
7,963,432 B2 6/2011 Knodel et al.
7,963,433 B2 6/2011 Whitman et al.
7,963,963 B2 6/2011 Francischelli et al.
7,963,964 B2 6/2011 Santilli et al.
7,964,206 B2 6/2011 Suokas et al.
7,966,799 B2 6/2011 Morgan et al.
7,967,178 B2 6/2011 Scirica et al.
7,967,179 B2 6/2011 Olson et al.
7,967,180 B2 6/2011 Scirica
7,967,181 B2 6/2011 Viola et al.
7,967,839 B2 6/2011 Flock et al.
7,972,298 B2 7/2011 Wallace et al.
7,980,443 B2 7/2011 Scheib et al.
7,987,405 B2 7/2011 Turner et al.
7,988,026 B2 8/2011 Knodel et al.
7,988,027 B2 8/2011 Olson et al.
7,988,028 B2 8/2011 Farascioni et al.
7,992,757 B2 8/2011 Wheeler et al.
7,993,360 B2 8/2011 Hacker et al.
7,994,670 B2 8/2011 Ji
7,997,468 B2 8/2011 Farascioni
7,997,469 B2 8/2011 Olson et al.
8,002,696 B2 8/2011 Suzuki
8,002,784 B2 8/2011 Jinno et al.
8,002,785 B2 8/2011 Weiss et al.
8,002,795 B2 8/2011 Beetel
8,006,365 B2 8/2011 Levin et al.
8,006,885 B2 8/2011 Marczyk
8,006,889 B2 8/2011 Adams et al.
8,007,511 B2 8/2011 Brock et al.
8,011,550 B2 9/2011 Aranyi et al.
8,011,551 B2 9/2011 Marczyk et al.
8,011,553 B2 9/2011 Mastri et al.
8,011,555 B2 9/2011 Tarinelli et al.
8,012,170 B2 9/2011 Whitman et al.
8,016,176 B2 9/2011 Kasvikis et al.
8,016,177 B2 9/2011 Bettuchi et al.
8,016,178 B2 9/2011 Olson et al.
8,016,855 B2 9/2011 Whitman et al.
8,016,858 B2 9/2011 Whitman
8,016,881 B2 9/2011 Furst
8,020,742 B2 9/2011 Marczyk
8,020,743 B2 9/2011 Shelton, IV
8,021,375 B2 9/2011 Aldrich et al.
8,025,199 B2 9/2011 Whitman et al.
8,028,883 B2 10/2011 Stopek
8,028,884 B2 10/2011 Sniffin et al.
8,028,885 B2 10/2011 Smith et al.
8,034,077 B2 10/2011 Smith et al.
8,034,363 B2 10/2011 Li et al.
8,037,591 B2 10/2011 Spivey et al.
8,038,045 B2 10/2011 Bettuchi et al.
8,038,046 B2 10/2011 Smith et al.
8,038,686 B2 10/2011 Huitema et al.
8,043,207 B2 10/2011 Adams et al.
8,043,328 B2 10/2011 Hahnen et al.
8,044,536 B2 10/2011 Nguyen et al.
8,047,236 B2 11/2011 Perry
8,048,503 B2 11/2011 Farnsworth et al.
8,056,787 B2 11/2011 Boudreaux et al.
8,056,788 B2 11/2011 Mastri et al.
8,057,508 B2 11/2011 Shelton, IV
8,058,771 B2 11/2011 Giordano et al.
8,060,250 B2 11/2011 Reiland et al.
8,061,576 B2 11/2011 Cappola
8,062,330 B2 11/2011 Prommersberger et al.
8,063,619 B2 11/2011 Zhu et al.
8,066,167 B2 11/2011 Measamer et al.
8,066,168 B2 11/2011 Vidal et al.
D650,074 S 12/2011 Hunt et al.
8,030,004 B2 12/2011 Downey et al.
8,070,033 B2 12/2011 Milliman et al.
8,070,035 B2 12/2011 Holsten et al.
8,070,743 B2 12/2011 Kagan et al.
8,075,571 B2 12/2011 Vitali et al.
8,079,950 B2 12/2011 Stern et al.
8,083,118 B2 12/2011 Milliman et al.
8,083,119 B2 12/2011 Prommersberger
8,083,120 B2 12/2011 Shelton, IV et al.
8,084,001 B2 12/2011 Burns et al.
8,085,013 B2 12/2011 Wei et al.
8,087,563 B2 1/2012 Milliman et al.
8,089,509 B2 1/2012 Chatenever et al.
8,091,756 B2 1/2012 Viola
8,092,443 B2 1/2012 Bischoff
8,092,932 B2 1/2012 Phillips et al.
8,096,458 B2 1/2012 Hessler
8,097,017 B2 1/2012 Viola
8,100,310 B2 1/2012 Zemlok
8,100,872 B2 1/2012 Patel
8,102,278 B2 1/2012 Deck et al.
8,105,350 B2 1/2012 Lee et al.
8,107,925 B2 1/2012 Natsuno et al.
8,108,072 B2 1/2012 Zhao et al.
8,109,426 B2 2/2012 Milliman et al.
8,110,208 B1 2/2012 Hen
8,113,405 B2 2/2012 Milliman
8,113,410 B2 2/2012 Hall et al.
8,114,100 B2 2/2012 Smith et al.
8,122,128 B2 2/2012 Burke
8,123,103 B2 2/2012 Milliman
8,123,766 B2 2/2012 Bauman et al.
8,123,767 B2 2/2012 Bauman et al.
8,125,168 B2 2/2012 Johnson et al.
8,127,975 B2 3/2012 Olson et al.
8,127,976 B2 3/2012 Scirica et al.

(56) **References Cited**

U.S. PATENT DOCUMENTS

8,128,624 B2 3/2012 Couture et al.
8,128,643 B2 3/2012 Aranyi et al.
8,128,645 B2 3/2012 Sonnenschein et al.
8,132,703 B2 3/2012 Milliman et al.
8,132,706 B2 3/2012 Marczyk et al.
8,134,306 B2 3/2012 Drader et al.
8,136,712 B2 3/2012 Zingman
8,136,713 B2 3/2012 Hathaway et al.
8,137,339 B2 3/2012 Jinno et al.
8,140,417 B2 3/2012 Shibata
8,141,762 B2 3/2012 Bedi et al.
8,141,763 B2 3/2012 Milliman
8,142,425 B2 3/2012 Eggers
8,146,790 B2 4/2012 Milliman
8,147,485 B2 4/2012 Wham et al.
8,152,041 B2 4/2012 Kostrzewski
8,154,239 B2 4/2012 Katsuki et al.
8,157,145 B2 4/2012 Shelton, IV et al.
8,157,148 B2 4/2012 Scirica
8,157,151 B2 4/2012 Ingmanson et al.
8,157,152 B2 4/2012 Holsten et al.
8,157,153 B2 4/2012 Shelton, IV et al.
8,157,793 B2 4/2012 Omori et al.
8,161,977 B2 4/2012 Shelton, IV et al.
8,162,138 B2 4/2012 Bettenhausen et al.
8,162,197 B2 4/2012 Mastri et al.
8,130,458 B2 5/2012 Kane et al.
8,167,185 B2 5/2012 Shelton, IV et al.
8,167,895 B2 5/2012 D'Agostino et al.
8,167,898 B1 5/2012 Schaller et al.
8,170,241 B2 5/2012 Roe et al.
8,172,120 B2 5/2012 Boyden et al.
8,172,122 B2 5/2012 Kasvikis et al.
8,172,124 B2 5/2012 Shelton, IV et al.
8,177,797 B2 5/2012 Shimoji et al.
8,179,705 B2 5/2012 Chapuis
8,181,840 B2 5/2012 Milliman
8,186,555 B2 5/2012 Shelton, IV et al.
8,186,560 B2 5/2012 Hess et al.
8,191,752 B2 6/2012 Scirica
8,192,460 B2 6/2012 Orban, III et al.
8,196,795 B2 6/2012 Moore et al.
8,196,796 B2 6/2012 Shelton, IV et al.
8,197,501 B2 6/2012 Shadeck et al.
8,197,502 B2 6/2012 Smith et al.
8,201,720 B2 6/2012 Hessler
8,201,721 B2 6/2012 Zemlok et al.
8,205,779 B2 6/2012 Ma
8,205,780 B2 6/2012 Sorrentino et al.
8,205,781 B2 6/2012 Baxter, III et al.
8,210,411 B2 7/2012 Yates et al.
8,210,414 B2 7/2012 Bettuchi et al.
8,210,415 B2 7/2012 Ward
8,210,416 B2 7/2012 Milliman et al.
8,211,125 B2 7/2012 Spivey
8,214,019 B2 7/2012 Govari et al.
8,215,531 B2 7/2012 Shelton, IV et al.
8,215,533 B2 7/2012 Viola et al.
8,220,468 B2 7/2012 Cooper et al.
8,220,688 B2 7/2012 Laurent et al.
8,220,690 B2 7/2012 Hess et al.
8,221,424 B2 7/2012 Cha
8,225,799 B2 7/2012 Bettuchi
8,226,715 B2 7/2012 Hwang et al.
8,227,946 B2 7/2012 Kim
8,228,048 B2 7/2012 Spencer
8,231,040 B2 7/2012 Zemlok et al.
8,231,041 B2 7/2012 Marczyk et al.
8,231,042 B2 7/2012 Hessler et al.
8,231,043 B2 7/2012 Tarinelli et al.
8,236,010 B2 8/2012 Ortiz et al.
8,241,271 B2 8/2012 Millman et al.
8,241,308 B2 8/2012 Kortenbach et al.
8,241,322 B2 8/2012 Whitman et al.
8,245,594 B2 8/2012 Rogers et al.
8,245,898 B2 8/2012 Smith et al.
8,245,899 B2 8/2012 Swensgard et al.
8,245,900 B2 8/2012 Scirica
8,245,901 B2 8/2012 Stopek
8,246,637 B2 8/2012 Viola et al.
8,256,654 B2 9/2012 Bettuchi et al.
8,256,655 B2 9/2012 Sniffin et al.
8,256,656 B2 9/2012 Milliman et al.
8,257,251 B2 9/2012 Shelton, IV et al.
8,257,356 B2 9/2012 Bleich et al.
8,257,391 B2 9/2012 Orban, III et al.
8,262,655 B2 9/2012 Ghabrial et al.
8,267,300 B2 9/2012 Boudreaux
8,267,924 B2 9/2012 Zemlok et al.
8,267,946 B2 9/2012 Whitfield et al.
8,267,951 B2 9/2012 Whayne et al.
8,269,121 B2 9/2012 Smith
8,272,553 B2 9/2012 Mastri et al.
8,272,554 B2 9/2012 Whitman et al.
8,273,404 B2 9/2012 Dave et al.
8,231,973 B2 10/2012 Wenchell et al.
8,231,974 B2 10/2012 Hessler et al.
8,237,561 B2 10/2012 Nunez et al.
8,276,801 B2 10/2012 Zemlok et al.
8,276,802 B2 10/2012 Kostrzewski
8,277,473 B2 10/2012 Sunaoshi et al.
8,282,654 B2 10/2012 Ferrari et al.
8,286,845 B2 10/2012 Perry et al.
8,292,147 B2 10/2012 Viola
8,292,150 B2 10/2012 Bryant
8,292,151 B2 10/2012 Viola
8,292,152 B2 10/2012 Milliman et al.
8,292,155 B2 10/2012 Shelton, IV et al.
8,292,157 B2 10/2012 Smith et al.
8,292,883 B2 10/2012 Whitman
8,293,677 B2 10/2012 Wiesner et al.
8,298,161 B2 10/2012 Vargas
8,302,323 B2 11/2012 Fortier et al.
8,308,040 B2 11/2012 Huang et al.
8,308,042 B2 11/2012 Aranyi
8,308,046 B2 11/2012 Prommersberger
8,308,659 B2 11/2012 Scheibe et al.
8,313,496 B2 11/2012 Sauer et al.
8,313,509 B2 11/2012 Kostrzewski
8,317,070 B2 11/2012 Hueil et al.
8,317,071 B1 11/2012 Knodel
8,317,074 B2 11/2012 Ortiz et al.
8,317,790 B2 11/2012 Bell et al.
8,319,002 B2 11/2012 Daniels et al.
8,322,455 B2 12/2012 Shelton, IV et al.
8,322,589 B2 12/2012 Boudreaux
8,322,590 B2 12/2012 Patel et al.
8,323,789 B2 12/2012 Rozhin et al.
8,328,061 B2 12/2012 Kasvikis
8,328,062 B2 12/2012 Viola
8,328,063 B2 12/2012 Milliman et al.
8,328,064 B2 12/2012 Racenet et al.
8,328,802 B2 12/2012 Deville et al.
8,328,823 B2 12/2012 Aranyi et al.
8,333,313 B2 12/2012 Boudreaux et al.
8,333,764 B2 12/2012 Francischelli et al.
8,336,753 B2 12/2012 Olson et al.
8,336,754 B2 12/2012 Cappola et al.
8,342,377 B2 1/2013 Milliman et al.
8,342,378 B2 1/2013 Marczyk et al.
8,342,379 B2 1/2013 Whitman et al.
8,348,123 B2 1/2013 Scirica et al.
8,348,125 B2 1/2013 Viola et al.
8,348,126 B2 1/2013 Olson et al.
8,348,127 B2 1/2013 Marczyk
8,348,129 B2 1/2013 Bedi et al.
8,348,130 B2 1/2013 Shah et al.
8,348,131 B2 1/2013 Omaits et al.
8,348,972 B2 1/2013 Soltz et al.
8,353,437 B2 1/2013 Boudreaux
8,353,438 B2 1/2013 Baxter, III et al.
8,353,439 B2 1/2013 Baxter, III et al.
8,356,740 B1 1/2013 Knodel
8,357,144 B2 1/2013 Whitman et al.

(56) **References Cited**

U.S. PATENT DOCUMENTS

8,360,296 B2 1/2013 Zingman
8,360,297 B2 1/2013 Shelton, IV et al.
8,360,298 B2 1/2013 Farascioni et al.
8,360,299 B2 1/2013 Zemlok et al.
8,361,501 B2 1/2013 DiTizio et al.
8,365,973 B1 2/2013 White et al.
8,365,975 B1 2/2013 Manoux et al.
8,365,976 B2 2/2013 Hess et al.
8,366,559 B2 2/2013 Papenfuss et al.
8,371,491 B2 2/2013 Huitema et al.
8,371,492 B2 2/2013 Aranyi et al.
8,371,493 B2 2/2013 Aranyi et al.
8,372,094 B2 2/2013 Bettuchi et al.
8,376,865 B2 2/2013 Forster et al.
8,377,044 B2 2/2013 Coe et al.
8,388,633 B2 3/2013 Rousseau et al.
8,389,588 B2 3/2013 Ringeisen
8,393,513 B2 3/2013 Jankowski
8,393,514 B2 3/2013 Shelton, IV et al.
8,393,516 B2 3/2013 Kostrzewski
8,397,971 B2 3/2013 Yates et al.
8,398,633 B2 3/2013 Mueller
8,398,673 B2 3/2013 Hinchliffe et al.
8,403,138 B2 3/2013 Weisshaupt et al.
8,403,198 B2 3/2013 Sorrentino et al.
8,403,832 B2 3/2013 Cunningham et al.
8,403,945 B2 3/2013 Whitfield et al.
8,408,439 B2 4/2013 Huang et al.
8,408,442 B2 4/2013 Racenet et al.
8,409,079 B2 4/2013 Oakamoto et al.
8,409,174 B2 4/2013 Omori
8,409,222 B2 4/2013 Whitfield et al.
8,409,223 B2 4/2013 Sorrentino et al.
8,413,870 B2 4/2013 Pastorelli et al.
8,413,871 B2 4/2013 Racenet et al.
8,413,872 B2 4/2013 Patel
8,414,577 B2 4/2013 Boudreaux et al.
8,418,909 B2 4/2013 Kostrzewski
8,424,737 B2 4/2013 Scirica
8,424,739 B2 4/2013 Racenet et al.
8,424,740 B2 4/2013 Shelton, IV et al.
8,424,741 B2 4/2013 McGuckin, Jr. et al.
8,425,600 B2 4/2013 Maxwell
8,430,292 B2 4/2013 Patel et al.
8,430,892 B2 4/2013 Bindra et al.
8,430,898 B2 4/2013 Wiener et al.
8,439,246 B1 5/2013 Knodel et al.
8,444,036 B2 5/2013 Shelton, IV
8,444,549 B2 5/2013 Viola et al.
8,453,904 B2 6/2013 Eskaros et al.
8,453,906 B2 6/2013 Huang et al.
8,453,907 B2 6/2013 Laurent et al.
8,453,908 B2 6/2013 Bedi et al.
8,453,912 B2 6/2013 Mastri et al.
8,453,914 B2 6/2013 Laurent et al.
8,454,628 B2 6/2013 Smith et al.
8,457,757 B2 6/2013 Cauller et al.
8,459,520 B2 6/2013 Giordano et al.
8,459,525 B2 6/2013 Yates et al.
8,464,922 B2 6/2013 Marczyk
8,464,923 B2 6/2013 Shelton, IV
8,464,924 B2 6/2013 Gresham et al.
8,464,925 B2 6/2013 Hull et al.
8,465,502 B2 6/2013 Zergiebel
8,469,973 B2 6/2013 Meade et al.
8,474,677 B2 7/2013 Woodard, Jr. et al.
8,475,453 B2 7/2013 Marczyk et al.
8,475,474 B2 7/2013 Bombard et al.
8,479,969 B2 7/2013 Shelton, IV
8,480,703 B2 7/2013 Nicholas et al.
8,485,412 B2 7/2013 Shelton, IV et al.
8,485,413 B2 7/2013 Scheib et al.
8,490,853 B2 7/2013 Criscuolo et al.
8,491,581 B2 7/2013 Deville et al.
8,496,156 B2 7/2013 Sniffin et al.
8,496,683 B2 7/2013 Prommersberger et al.
8,499,992 B2 8/2013 Whitman et al.
8,499,993 B2 8/2013 Shelton, IV et al.
8,500,762 B2 8/2013 Sholev et al.
8,506,557 B2 8/2013 Zemlok et al.
8,506,580 B2 8/2013 Zergiebel et al.
8,506,581 B2 8/2013 Wingardner, III et al.
8,511,308 B2 8/2013 Hecox et al.
8,512,359 B2 8/2013 Whitman et al.
8,517,239 B2 8/2013 Scheib et al.
8,517,241 B2 8/2013 Nicholas et al.
8,517,243 B2 8/2013 Giordano et al.
8,517,244 B2 8/2013 Shelton, IV et al.
8,521,273 B2 8/2013 Kliman
8,523,043 B2 9/2013 Ullrich et al.
8,523,881 B2 9/2013 Cabiri et al.
8,523,900 B2 9/2013 Jinno et al.
8,529,588 B2 9/2013 Ahlberg et al.
8,529,600 B2 9/2013 Woodard, Jr. et al.
8,529,819 B2 9/2013 Ostapoff et al.
8,534,528 B2 9/2013 Shelton, IV
8,535,304 B2 9/2013 Sklar et al.
8,540,128 B2 9/2013 Shelton, IV et al.
8,540,129 B2 9/2013 Baxter, III et al.
8,540,130 B2 9/2013 Moore et al.
8,540,131 B2 9/2013 Swayze
8,540,133 B2 9/2013 Bedi et al.
8,540,733 B2 9/2013 Whitman et al.
8,540,735 B2 9/2013 Mitelberg et al.
8,551,076 B2 10/2013 Duval et al.
8,556,151 B2 10/2013 Viola
8,556,918 B2 10/2013 Bauman et al.
8,561,870 B2 10/2013 Baxter, III et al.
8,561,873 B2 10/2013 Ingmanson et al.
8,567,656 B2 10/2013 Shelton, IV et al.
8,573,461 B2 11/2013 Shelton, IV et al.
8,573,465 B2 11/2013 Shelton, IV et al.
8,574,199 B2 11/2013 Von Bülow et al.
8,574,263 B2 11/2013 Mueller
8,575,880 B2 11/2013 Grantz
8,579,176 B2 11/2013 Smith et al.
8,579,178 B2 11/2013 Holsten et al.
8,579,897 B2 11/2013 Vakharia et al.
8,579,937 B2 11/2013 Gresham
8,584,919 B2 11/2013 Hueil et al.
8,585,721 B2 11/2013 Kirsch
8,590,762 B2 11/2013 Hess et al.
8,602,287 B2 12/2013 Yates et al.
8,602,288 B2 12/2013 Shelton, IV et al.
8,603,135 B2 12/2013 Mueller
8,608,044 B2 12/2013 Hueil et al.
8,608,045 B2 12/2013 Smith et al.
8,608,046 B2 12/2013 Laurent et al.
8,608,745 B2 12/2013 Guzman et al.
8,613,383 B2 12/2013 Beckman et al.
8,616,431 B2 12/2013 Timm et al.
8,622,274 B2 1/2014 Yates et al.
8,622,275 B2 1/2014 Baxter, III et al.
8,628,518 B2 1/2014 Blumenkranz et al.
8,628,545 B2 1/2014 Cabrera et al.
8,631,987 B2 1/2014 Shelton, IV et al.
8,632,462 B2 1/2014 Yoo et al.
8,632,525 B2 1/2014 Kerr et al.
8,632,535 B2 1/2014 Shelton, IV et al.
8,636,736 B2 1/2014 Yates et al.
8,636,766 B2 1/2014 Milliman et al.
8,640,788 B2 2/2014 Dachs, II et al.
8,647,258 B2 2/2014 Aranyi et al.
8,652,120 B2 2/2014 Giordano et al.
8,652,151 B2 2/2014 Lehman et al.
8,657,174 B2 2/2014 Yates et al.
8,657,176 B2 2/2014 Shelton, IV et al.
8,657,177 B2 2/2014 Scirica et al.
8,657,178 B2 2/2014 Hueil et al.
8,657,482 B2 2/2014 Malackowski et al.
8,657,808 B2 2/2014 McPherson et al.
8,662,370 B2 3/2014 Takei
8,663,192 B2 3/2014 Hester et al.
8,668,129 B2 3/2014 Olson

(56) **References Cited**

U.S. PATENT DOCUMENTS

8,668,130 B2 3/2014 Hess et al.
8,672,206 B2 3/2014 Aranyi et al.
8,672,207 B2 3/2014 Shelton, IV et al.
8,672,208 B2 3/2014 Hess et al.
8,673,210 B2 3/2014 Deshays
8,678,263 B2 3/2014 Viola
8,679,093 B2 3/2014 Farra
8,679,098 B2 3/2014 Hart
8,679,137 B2 3/2014 Bauman et al.
8,679,454 B2 3/2014 Guire et al.
8,634,250 B2 4/2014 Bettuchi et al.
8,684,253 B2 4/2014 Giordano et al.
8,685,020 B2 4/2014 Weizman et al.
8,695,866 B2 4/2014 Leimbach et al.
8,696,665 B2 4/2014 Hunt et al.
8,701,958 B2 4/2014 Shelton, IV et al.
8,701,959 B2 4/2014 Shah
8,708,211 B2 4/2014 Zemlok et al.
8,708,213 B2 4/2014 Shelton, IV et al.
8,715,256 B2 5/2014 Greener
8,720,766 B2 5/2014 Hess et al.
8,721,630 B2 5/2014 Ortiz et al.
8,721,666 B2 5/2014 Schroeder et al.
8,727,197 B2 5/2014 Hess et al.
8,727,200 B2 5/2014 Roy
8,728,119 B2 5/2014 Cummins
8,733,613 B2 5/2014 Huitema et al.
8,733,614 B2 5/2014 Ross et al.
8,734,478 B2 5/2014 Widenhouse et al.
8,739,033 B2 5/2014 Rosenberg
8,740,034 B2 6/2014 Morgan et al.
8,740,037 B2 6/2014 Shelton, IV et al.
8,740,038 B2 6/2014 Shelton, IV et al.
8,740,987 B2 6/2014 Geremakis et al.
8,746,529 B2 6/2014 Shelton, IV et al.
8,746,530 B2 6/2014 Giordano et al.
8,746,533 B2 6/2014 Whitman et al.
8,746,535 B2 6/2014 Shelton, IV et al.
8,747,238 B2 6/2014 Shelton, IV et al.
8,752,264 B2 6/2014 Ackley et al.
8,752,699 B2 6/2014 Morgan et al.
8,752,747 B2 6/2014 Shelton, IV et al.
8,752,749 B2 6/2014 Moore et al.
8,757,465 B2 6/2014 Woodard, Jr. et al.
8,758,235 B2 6/2014 Jaworek
8,758,391 B2 6/2014 Swayze et al.
8,758,438 B2 6/2014 Boyce et al.
8,734,415 B2 7/2014 Malackowski et al.
8,739,741 B2 7/2014 Baxter III et al.
8,763,875 B2 7/2014 Morgan et al.
8,763,877 B2 7/2014 Schall et al.
8,763,879 B2 7/2014 Shelton, IV et al.
8,771,169 B2 7/2014 Whitman et al.
8,777,004 B2 7/2014 Shelton, IV et al.
8,783,541 B2 7/2014 Shelton, IV et al.
8,783,542 B2 7/2014 Riestenberg et al.
8,783,543 B2 7/2014 Shelton, IV et al.
8,784,404 B2 7/2014 Doyle et al.
8,789,737 B2 7/2014 Hodgkinson et al.
8,789,739 B2 7/2014 Swensgard
8,789,740 B2 7/2014 Baxter, III et al.
8,790,684 B2 7/2014 Dave et al.
8,794,496 B2 8/2014 Scirica
8,794,497 B2 8/2014 Zingman
8,795,276 B2 8/2014 Dietz et al.
8,800,838 B2 8/2014 Shelton, IV
8,800,839 B2 8/2014 Beetel
8,800,841 B2 8/2014 Ellerhorst et al.
8,801,734 B2 8/2014 Shelton, IV et al.
8,801,735 B2 8/2014 Shelton, IV et al.
8,801,752 B2 8/2014 Fortier et al.
8,806,973 B2 8/2014 Ross et al.
8,807,414 B2 8/2014 Ross et al.
8,808,294 B2 8/2014 Fox et al.
8,808,311 B2 8/2014 Heinrich et al.
8,813,866 B2 8/2014 Suzuki
8,814,024 B2 8/2014 Woodard, Jr. et al.
8,814,025 B2 8/2014 Miller et al.
8,820,603 B2 9/2014 Shelton, IV et al.
8,820,605 B2 9/2014 Shelton, IV
8,820,606 B2 9/2014 Hodgkinson
8,820,607 B2 9/2014 Marczyk
8,822,934 B2 9/2014 Sayeh et al.
8,827,133 B2 9/2014 Shelton, IV et al.
8,827,903 B2 9/2014 Shelton, IV et al.
8,833,632 B2 9/2014 Swensgard
8,840,003 B2 9/2014 Morgan et al.
8,840,603 B2 9/2014 Shelton, IV et al.
8,844,789 B2 9/2014 Shelton, IV et al.
8,851,354 B2 10/2014 Swensgard et al.
8,852,199 B2 10/2014 Deslauriers et al.
8,857,693 B2 10/2014 Schuckmann et al.
8,857,694 B2 10/2014 Shelton, IV et al.
8,858,571 B2 10/2014 Shelton, IV et al.
8,858,590 B2 10/2014 Shelton, IV et al.
8,864,007 B2 10/2014 Widenhouse et al.
8,864,009 B2 10/2014 Shelton, IV et al.
8,870,050 B2 10/2014 Hodgkinson
8,875,971 B2 * 11/2014 Hall A61B 17/07207 227/175.2
8,875,972 B2 11/2014 Weisenburgh, II et al.
8,876,857 B2 11/2014 Burbank
8,888,688 B2 11/2014 Julian et al.
8,893,946 B2 11/2014 Boudreaux et al.
8,893,949 B2 11/2014 Shelton, IV et al.
8,894,647 B2 11/2014 Beardsley et al.
8,894,654 B2 11/2014 Anderson
8,899,463 B2 12/2014 Schall et al.
8,899,464 B2 12/2014 Hueil et al.
8,899,465 B2 12/2014 Shelton, IV et al.
8,899,466 B2 12/2014 Baxter, III et al.
8,905,977 B2 12/2014 Shelton et al.
8,911,426 B2 12/2014 Coppeta et al.
8,911,471 B2 12/2014 Spivey et al.
8,920,438 B2 12/2014 Aranyi et al.
8,925,782 B2 1/2015 Shelton, IV
8,925,783 B2 1/2015 Zemlok et al.
8,925,788 B2 1/2015 Hess et al.
8,926,598 B2 1/2015 Mollere et al.
8,931,682 B2 1/2015 Timm et al.
8,936,614 B2 1/2015 Allen, IV
8,939,343 B2 1/2015 Milliman et al.
8,939,344 B2 1/2015 Olson et al.
8,955,732 B2 2/2015 Zemlok et al.
8,956,342 B1 2/2015 Russo et al.
8,960,520 B2 2/2015 McCuen
8,960,521 B2 2/2015 Kostrzewski
8,961,504 B2 2/2015 Hoarau et al.
8,932,195 B2 3/2015 Claus et al.
8,967,443 B2 3/2015 McCuen
8,967,446 B2 3/2015 Beardsley et al.
8,968,276 B2 3/2015 Zemlok et al.
8,968,312 B2 3/2015 Marczyk et al.
8,968,337 B2 3/2015 Whitfield et al.
8,968,340 B2 3/2015 Chowaniec et al.
8,970,507 B2 3/2015 Holbein et al.
8,973,803 B2 * 3/2015 Hall A61B 17/07207 227/175.1
8,973,804 B2 3/2015 Hess et al.
8,978,954 B2 3/2015 Shelton, IV et al.
8,978,955 B2 3/2015 Aronhalt et al.
8,978,956 B2 3/2015 Schall et al.
8,979,890 B2 3/2015 Boudreaux
8,991,676 B2 3/2015 Hess et al.
8,991,677 B2 3/2015 Moore et al.
8,992,422 B2 3/2015 Spivey et al.
8,992,565 B2 3/2015 Brisson et al.
8,996,165 B2 3/2015 Wang et al.
8,998,058 B2 4/2015 Moore et al.
9,005,230 B2 4/2015 Yates et al.
9,011,471 B2 4/2015 Timm et al.
9,016,539 B2 4/2015 Kostrzewski et al.
9,016,540 B2 4/2015 Whitman et al.
9,016,542 B2 4/2015 Shelton, IV et al.

(56) **References Cited**

U.S. PATENT DOCUMENTS

9,017,331 B2 4/2015 Fox
9,017,371 B2 4/2015 Whitman et al.
9,023,014 B2 5/2015 Chowaniec et al.
9,027,817 B2 5/2015 Milliman et al.
9,028,494 B2 5/2015 Shelton, IV et al.
9,028,495 B2 5/2015 Mueller et al.
9,028,519 B2 5/2015 Yates et al.
9,033,203 B2 5/2015 Woodard, Jr. et al.
9,033,204 B2 5/2015 Shelton, IV et al.
9,038,881 B1 5/2015 Schaller et al.
9,039,690 B2 5/2015 Kersten et al.
9,039,720 B2 5/2015 Madan
9,043,027 B2 5/2015 Durant et al.
9,044,227 B2 6/2015 Shelton, IV et al.
9,044,228 B2 6/2015 Woodard, Jr. et al.
9,044,230 B2 6/2015 Morgan et al.
9,050,083 B2 6/2015 Yates et al.
9,050,084 B2 6/2015 Schmid et al.
9,050,100 B2 6/2015 Yates et al.
9,055,941 B2 6/2015 Schmid et al.
9,055,944 B2 6/2015 Hodgkinson et al.
9,055,961 B2 6/2015 Manzo et al.
9,060,770 B2 6/2015 Shelton, IV et al.
9,072,515 B2 * 7/2015 Hall A61B 17/07207
9,072,535 B2 7/2015 Shelton, IV et al.
9,072,536 B2 7/2015 Shelton, IV et al.
9,078,653 B2 7/2015 Leimbach et al.
9,084,601 B2 7/2015 Moore et al.
9,084,602 B2 7/2015 Gleiman
9,086,875 B2 7/2015 Harrat et al.
9,089,330 B2 7/2015 Widenhouse et al.
9,095,339 B2 8/2015 Moore et al.
9,095,362 B2 8/2015 Dachs, II et al.
9,096,033 B2 8/2015 Holop et al.
9,099,863 B2 8/2015 Smith et al.
9,101,358 B2 8/2015 Kerr et al.
9,101,385 B2 8/2015 Shelton, IV et al.
9,107,663 B2 8/2015 Swensgard
9,113,862 B2 8/2015 Morgan et al.
9,113,864 B2 8/2015 Morgan et al.
9,113,865 B2 8/2015 Shelton, IV et al.
9,113,873 B2 8/2015 Marczyk et al.
9,113,874 B2 8/2015 Shelton, IV et al.
9,113,880 B2 8/2015 Zemlok et al.
9,113,883 B2 8/2015 Aronhalt et al.
9,113,884 B2 8/2015 Shelton, IV et al.
9,119,657 B2 9/2015 Shelton, IV et al.
9,123,286 B2 9/2015 Park
9,125,654 B2 9/2015 Aronhalt et al.
9,125,662 B2 9/2015 Shelton, IV
9,131,940 B2 9/2015 Huitema et al.
9,131,957 B2 9/2015 Skarbnik et al.
9,138,225 B2 9/2015 Huang et al.
9,149,274 B2 10/2015 Spivey et al.
9,149,324 B2 10/2015 Huang et al.
9,149,325 B2 10/2015 Worrell et al.
9,161,753 B2 10/2015 Prior
9,161,803 B2 10/2015 Yates et al.
9,168,038 B2 10/2015 Shelton, IV et al.
9,168,054 B2 10/2015 Turner et al.
9,168,144 B2 10/2015 Rivin et al.
9,179,911 B2 11/2015 Morgan et al.
9,179,912 B2 11/2015 Yates et al.
9,186,143 B2 11/2015 Timm et al.
9,186,148 B2 11/2015 Felder et al.
9,192,380 B2 11/2015 Racenet et al.
9,192,384 B2 11/2015 Bettuchi
9,193,045 B2 11/2015 Saur et al.
9,198,661 B2 12/2015 Swensgard
9,198,662 B2 12/2015 Barton et al.
9,204,877 B2 12/2015 Whitman et al.
9,204,878 B2 * 12/2015 Hall A61B 17/07207
9,204,879 B2 12/2015 Shelton, IV
9,204,880 B2 12/2015 Baxter, III et al.
9,211,120 B2 12/2015 Scheib et al.
9,211,121 B2 12/2015 Hall et al.
9,211,122 B2 12/2015 Hagerty et al.
9,216,019 B2 12/2015 Schmid et al.
9,220,500 B2 12/2015 Swayze et al.
9,220,501 B2 12/2015 Baxter, III et al.
9,226,750 B2 1/2016 Weir et al.
9,226,751 B2 1/2016 Shelton, IV et al.
9,232,941 B2 1/2016 Vasudevan et al.
9,232,945 B2 1/2016 Zingman
9,232,979 B2 1/2016 Parihar et al.
9,237,891 B2 1/2016 Shelton, IV
9,241,714 B2 1/2016 Timm et al.
9,259,274 B2 2/2016 Prisco
9,239,207 B2 3/2016 Shelton, IV
9,239,212 B1 3/2016 Shelton, IV et al.
9,271,799 B2 3/2016 Shelton, IV et al.
9,272,406 B2 3/2016 Aronhalt et al.
9,277,919 B2 3/2016 Timmer et al.
9,277,922 B2 3/2016 Carter et al.
9,282,962 B2 3/2016 Schmid et al.
9,282,966 B2 3/2016 Shelton, IV et al.
9,282,974 B2 3/2016 Shelton, IV
9,283,045 B2 3/2016 Rhee et al.
9,283,054 B2 3/2016 Morgan et al.
9,289,206 B2 3/2016 Hess et al.
9,289,210 B2 3/2016 Baxter, III et al.
9,289,225 B2 3/2016 Shelton, IV et al.
9,289,256 B2 3/2016 Shelton, IV et al.
9,293,757 B2 3/2016 Chellew
9,295,464 B2 3/2016 Shelton, IV et al.
9,301,752 B2 4/2016 Vasudevan et al.
9,301,753 B2 4/2016 Aldridge et al.
9,301,755 B2 4/2016 Shelton, IV et al.
9,301,759 B2 4/2016 Spivey et al.
9,307,986 B2 4/2016 Hall et al.
9,307,988 B2 4/2016 Shelton, IV
9,308,011 B2 4/2016 Chao et al.
9,314,246 B2 4/2016 Shelton, IV et al.
9,320,518 B2 4/2016 Henderson et al.
9,320,520 B2 4/2016 Shelton, IV et al.
9,320,521 B2 4/2016 Shelton, IV et al.
9,320,523 B2 4/2016 Shelton, IV et al.
9,326,767 B2 5/2016 Koch, Jr. et al.
9,326,768 B2 5/2016 Shelton, IV
9,326,769 B2 5/2016 Shelton, IV et al.
9,326,770 B2 5/2016 Shelton, IV et al.
9,326,771 B2 5/2016 Baxter, III et al.
9,332,890 B2 5/2016 Ozawa
9,332,974 B2 5/2016 Henderson et al.
9,332,984 B2 5/2016 Weaner et al.
9,332,987 B2 5/2016 Leimbach et al.
9,345,481 B2 5/2016 Hall et al.
9,351,726 B2 5/2016 Leimbach et al.
9,351,727 B2 5/2016 Leimbach et al.
9,351,730 B2 5/2016 Schmid et al.
9,358,003 B2 6/2016 Hall et al.
9,358,005 B2 6/2016 Shelton, IV et al.
9,364,220 B2 6/2016 Williams
9,364,230 B2 6/2016 Shelton, IV et al.
9,364,233 B2 6/2016 Alexander, III et al.
9,364,279 B2 6/2016 Houser et al.
9,370,358 B2 6/2016 Shelton, IV et al.
9,370,364 B2 6/2016 Smith et al.
9,386,983 B2 7/2016 Swensgard et al.
9,386,984 B2 7/2016 Aronhalt et al.
9,386,988 B2 7/2016 Baxter, III et al.
9,393,015 B2 7/2016 Laurent et al.
9,398,911 B2 7/2016 Auld
9,402,626 B2 8/2016 Ortiz et al.
9,408,604 B2 8/2016 Shelton, IV et al.
9,408,606 B2 8/2016 Shelton, IV
9,414,838 B2 8/2016 Shelton, IV et al.
9,433,419 B2 9/2016 Gonzalez et al.
9,445,813 B2 9/2016 Shelton, IV et al.
9,451,958 B2 9/2016 Shelton, IV et al.
9,480,476 B2 11/2016 Aldridge et al.
9,526,564 B2 12/2016 Rusin
9,597,104 B2 3/2017 Nicholas et al.
2001/0025183 A1 9/2001 Shahidi

(56) **References Cited**

U.S. PATENT DOCUMENTS

2001/0044637 A1 11/2001 Jacobs et al.
2002/0014510 A1 2/2002 Richter et al.
2002/0022836 A1 2/2002 Goble et al.
2002/0026126 A1 2/2002 Burdorff et al.
2002/0029032 A1 3/2002 Arkin
2002/0029036 A1 3/2002 Goble et al.
2002/0049472 A1 4/2002 Coleman et al.
2002/0095175 A1 7/2002 Brock et al.
2002/0103494 A1 8/2002 Pacey
2002/0117534 A1 8/2002 Green et al.
2002/0127265 A1 9/2002 Bowman et al.
2002/0128552 A1 9/2002 Nowlin et al.
2002/0134811 A1 9/2002 Napier et al.
2002/0135474 A1 9/2002 Sylliassen
2002/0143340 A1 10/2002 Kaneko
2002/0157481 A1 10/2002 Kogiso et al.
2002/0165541 A1 11/2002 Whitman
2002/0188170 A1 12/2002 Santamore et al.
2002/0193808 A1 12/2002 Belef et al.
2003/0023316 A1 1/2003 Brown et al.
2003/0066858 A1 4/2003 Holgersson
2003/0078647 A1 4/2003 Vallana et al.
2003/0084983 A1 5/2003 Rangachari et al.
2003/0093103 A1 5/2003 Malackowski et al.
2003/0096158 A1 5/2003 Takano et al.
2003/0105478 A1 6/2003 Whitman et al.
2003/0114851 A1 6/2003 Truckai et al.
2003/0130677 A1 7/2003 Whitman et al.
2003/0139741 A1 7/2003 Goble et al.
2003/0153908 A1 8/2003 Goble et al.
2003/0153968 A1 8/2003 Geis et al.
2003/0163085 A1 8/2003 Tanner et al.
2003/0181900 A1 9/2003 Long
2003/0195387 A1 10/2003 Kortenbach et al.
2003/0205029 A1 11/2003 Chapolini et al.
2003/0216732 A1 11/2003 Truckai et al.
2003/0220660 A1 11/2003 Kortenbach et al.
2003/0236505 A1 12/2003 Bonadio et al.
2004/0002726 A1 1/2004 Nunez et al.
2004/0006335 A1 1/2004 Garrison
2004/0006340 A1 1/2004 Latterell et al.
2004/0006372 A1 1/2004 Racenet et al.
2004/0006861 A1 1/2004 Haytayan
2004/0030333 A1 2/2004 Goble
2004/0032345 A1 2/2004 Kazuya et al.
2004/0034357 A1 2/2004 Beane et al.
2004/0034369 A1 2/2004 Sauer et al.
2004/0044364 A1 3/2004 DeVries et al.
2004/0068161 A1 4/2004 Couvillon, Jr.
2004/0068224 A1 4/2004 Couvilion, Jr. et al.
2004/0068307 A1 4/2004 Goble
2004/0070369 A1 4/2004 Sakahibara
2004/0073222 A1 4/2004 Koseki
2004/0078037 A1 4/2004 Batchelor et al.
2004/0093024 A1 5/2004 Lousararian et al.
2004/0094597 A1 5/2004 Whitman et al.
2004/0097987 A1 5/2004 Pugsley et al.
2004/0098040 A1 5/2004 Taniguchi et al.
2004/0101822 A1 5/2004 Weisner et al.
2004/0102783 A1 5/2004 Sutterlin, III et al.
2004/0108357 A1 6/2004 Milliman et al.
2004/0110439 A1 6/2004 Chaikof et al.
2004/0111081 A1 6/2004 Whitman et al.
2004/0115022 A1 6/2004 Albertson et al.
2004/0116952 A1 6/2004 Sakurai et al.
2004/0133095 A1 7/2004 Dunki-Jacobs et al.
2004/0143297 A1 7/2004 Ramsey
2004/0147909 A1 7/2004 Johnston et al.
2004/0164123 A1 8/2004 Racenet et al.
2004/0167572 A1 8/2004 Roth et al.
2004/0173659 A1 9/2004 Green et al.
2004/0181219 A1 9/2004 Goble et al.
2004/0186470 A1 9/2004 Goble et al.
2004/0193189 A1 9/2004 Kortenbach et al.
2004/0199181 A1 10/2004 Knodel et al.
2004/0222268 A1 11/2004 Bilotti et al.
2004/0225186 A1 11/2004 Horne, Jr. et al.
2004/0230214 A1 11/2004 Donofrio et al.
2004/0232201 A1 11/2004 Wenchell et al.
2004/0236352 A1 11/2004 Wang et al.
2004/0243147 A1 12/2004 Lipow
2004/0243151 A1 12/2004 Demmy et al.
2004/0243163 A1 12/2004 Casiano et al.
2004/0243176 A1 12/2004 Hahnen et al.
2004/0247415 A1 12/2004 Mangone, Jr.
2004/0254455 A1 12/2004 Iddan
2004/0254566 A1 12/2004 Plicchi et al.
2004/0254590 A1 12/2004 Hoffman et al.
2004/0254608 A1 12/2004 Huitema et al.
2004/0260315 A1 12/2004 Dell et al.
2004/0267297 A1 12/2004 Malackowski
2004/0267310 A1 12/2004 Racenet et al.
2005/0010158 A1 1/2005 Brugger et al.
2005/0010213 A1 1/2005 Stad et al.
2005/0032511 A1 2/2005 Malone et al.
2005/0033352 A1 2/2005 Zeph et al.
2005/0033357 A1 2/2005 Braun
2005/0054946 A1 3/2005 Krzyzanowski
2005/0058890 A1 3/2005 Brazell et al.
2005/0059997 A1 3/2005 Bauman et al.
2005/0070929 A1 3/2005 Dalessandro et al.
2005/0075561 A1 4/2005 Golden
2005/0080454 A1 4/2005 Drews et al.
2005/0085693 A1 4/2005 Belson et al.
2005/0090817 A1 4/2005 Phan
2005/0096683 A1 5/2005 Ellins et al.
2005/0103819 A1* 5/2005 Racenet A61B 17/07207
227/175.1
2005/0107814 A1 5/2005 Johnston et al.
2005/0107824 A1 5/2005 Hillstead et al.
2005/0113820 A1 5/2005 Goble et al.
2005/0116673 A1 6/2005 Carl et al.
2005/0119525 A1 6/2005 Takemoto
2005/0119669 A1 6/2005 Demmy
2005/0124855 A1 6/2005 Jaffe et al.
2005/0125009 A1 6/2005 Perry et al.
2005/0125897 A1 6/2005 Wyslucha et al.
2005/0131173 A1 6/2005 McDaniel et al.
2005/0131211 A1 6/2005 Bayley et al.
2005/0131390 A1 6/2005 Heinrich et al.
2005/0131436 A1 6/2005 Johnston et al.
2005/0131437 A1 6/2005 Johnston et al.
2005/0131457 A1 6/2005 Douglas et al.
2005/0137454 A1 6/2005 Saadat et al.
2005/0137455 A1 6/2005 Ewers et al.
2005/0143759 A1 6/2005 Kelly
2005/0143769 A1 6/2005 White et al.
2005/0145675 A1 7/2005 Hartwick et al.
2005/0150928 A1 7/2005 Kameyama et al.
2005/0154258 A1 7/2005 Tartaglia et al.
2005/0154406 A1 7/2005 Bombard et al.
2005/0159184 A1 7/2005 Kerner et al.
2005/0165419 A1 7/2005 Sauer et al.
2005/0165435 A1 7/2005 Johnston et al.
2005/0169974 A1 8/2005 Tenerz et al.
2005/0171522 A1 8/2005 Christopherson
2005/0177181 A1 8/2005 Kagan et al.
2005/0182298 A1 8/2005 Ikeda et al.
2005/0187545 A1 8/2005 Hooven et al.
2005/0187572 A1 8/2005 Johnston et al.
2005/0187576 A1 8/2005 Whitman et al.
2005/0189397 A1 9/2005 Jankowski
2005/0192609 A1 9/2005 Whitman et al.
2005/0192628 A1 9/2005 Viola
2005/0203550 A1 9/2005 Laufer et al.
2005/0216055 A1 9/2005 Scirica et al.
2005/0223224 A1 10/2005 Okada et al.
2005/0240173 A1 10/2005 Morley et al.
2005/0240222 A1 10/2005 Shipp
2005/0245965 A1 11/2005 Orban, III et al.
2005/0251128 A1 11/2005 Amoah
2005/0256452 A1 11/2005 DeMarchi et al.
2005/0256522 A1 11/2005 Francischelli et al.
2005/0261676 A1 11/2005 Hall et al.

(56) **References Cited**

U.S. PATENT DOCUMENTS

2005/0261677 A1 11/2005 Hall et al.
2005/0263563 A1 12/2005 Racenet et al.
2005/0267455 A1 12/2005 Eggers et al.
2005/0267530 A1 12/2005 Cummins
2005/0272973 A1 12/2005 Kawano et al.
2005/0274768 A1 12/2005 Cummins et al.
2005/0283188 A1 12/2005 Loshakove et al.
2006/0004407 A1 1/2006 Hiles et al.
2006/0008787 A1 1/2006 Hayman et al.
2006/0011699 A1 1/2006 Olson et al.
2006/0015009 A1 1/2006 Jaffe et al.
2006/0020247 A1 1/2006 Kagan et al.
2006/0020258 A1 1/2006 Strauss et al.
2006/0020336 A1 1/2006 Liddicoat
2006/0025811 A1 2/2006 Shelton, IV
2006/0025812 A1 2/2006 Shelton, IV
2006/0041188 A1 2/2006 Dirusso et al.
2006/0047275 A1 3/2006 Goble
2006/0047303 A1 3/2006 Ortiz et al.
2006/0047307 A1 3/2006 Ortiz et al.
2006/0049229 A1 3/2006 Milliman et al.
2006/0052825 A1 3/2006 Ransick et al.
2006/0060630 A1 3/2006 Shelton, IV et al.
2006/0064086 A1 3/2006 Odom
2006/0079115 A1 4/2006 Aranyi et al.
2006/0079735 A1 4/2006 Martone et al.
2006/0085031 A1 4/2006 Bettuchi
2006/0085033 A1 4/2006 Criscuolo et al.
2006/0086032 A1 4/2006 Valencic et al.
2006/0087746 A1 4/2006 Lipow
2006/0089535 A1 4/2006 Raz et al.
2006/0100643 A1 5/2006 Laufer et al.
2006/0100649 A1 5/2006 Hart
2006/0108393 A1 5/2006 Heinrich et al.
2006/0111711 A1 5/2006 Goble
2006/0111723 A1 5/2006 Chapolini et al.
2006/0116634 A1 6/2006 Shachar
2006/0122636 A1 6/2006 Bailly et al.
2006/0142772 A1 6/2006 Ralph et al.
2006/0149163 A1 7/2006 Hibner et al.
2006/0161185 A1 7/2006 Saadat et al.
2006/0167471 A1 7/2006 Phillips
2006/0173470 A1 8/2006 Oray et al.
2006/0178556 A1 8/2006 Hasser et al.
2006/0180634 A1 8/2006 Shelton, IV et al.
2006/0185682 A1 8/2006 Marczyk
2006/0200123 A1 9/2006 Ryan
2006/0201989 A1 9/2006 Ojeda
2006/0206100 A1 9/2006 Eskridge et al.
2006/0212069 A1 9/2006 Shelton, IV
2006/0217729 A1 9/2006 Eskridge et al.
2006/0226196 A1 10/2006 Hueil et al.
2006/0235368 A1 10/2006 Oz
2006/0235469 A1 10/2006 Viola
2006/0241655 A1 10/2006 Viola
2006/0241692 A1 10/2006 McGuckin, Jr. et al.
2006/0244460 A1 11/2006 Weaver
2006/0252993 A1 11/2006 Freed et al.
2006/0253069 A1 11/2006 Li et al.
2006/0258904 A1 11/2006 Stefanchik et al.
2006/0258910 A1 11/2006 Stefanchik et al.
2006/0259073 A1 11/2006 Miyamoto et al.
2006/0264831 A1 11/2006 Skwarek et al.
2006/0264927 A1 11/2006 Ryan
2006/0264929 A1 11/2006 Goble et al.
2006/0271042 A1 11/2006 Latterell et al.
2006/0271102 A1 11/2006 Bosshard et al.
2006/0278680 A1 12/2006 Viola et al.
2006/0278681 A1 12/2006 Viola et al.
2006/0282064 A1 12/2006 Shimizu et al.
2006/0284730 A1 12/2006 Schmid et al.
2006/0287576 A1 12/2006 Tsuji et al.
2006/0289602 A1 12/2006 Wales et al.
2006/0291981 A1 12/2006 Viola et al.
2007/0010702 A1 1/2007 Wang et al.
2007/0010838 A1 1/2007 Shelton, IV et al.
2007/0023476 A1 2/2007 Whitman et al.
2007/0023477 A1 2/2007 Whitman et al.
2007/0026039 A1 2/2007 Drumheller et al.
2007/0026040 A1 2/2007 Crawley et al.
2007/0027468 A1 2/2007 Wales et al.
2007/0027472 A1 2/2007 Hiles et al.
2007/0027551 A1 2/2007 Farnsworth et al.
2007/0027553 A1 2/2007 Biran et al.
2007/0034668 A1 2/2007 Holsten et al.
2007/0049951 A1 3/2007 Menn
2007/0049966 A1 3/2007 Bonadio et al.
2007/0051375 A1 3/2007 Milliman
2007/0055219 A1 3/2007 Whitman et al.
2007/0066981 A1 3/2007 Meagher
2007/0070574 A1 3/2007 Nerheim et al.
2007/0073341 A1 3/2007 Smith
2007/0078328 A1 4/2007 Ozaki et al.
2007/0078484 A1 4/2007 Talarico et al.
2007/0083193 A1 4/2007 Werneth et al.
2007/0084897 A1 4/2007 Shelton, IV et al.
2007/0090788 A1 4/2007 Hansford et al.
2007/0093869 A1 4/2007 Bloom et al.
2007/0102472 A1 5/2007 Shelton, IV
2007/0106113 A1 5/2007 Ravo
2007/0106317 A1 5/2007 Shelton, IV et al.
2007/0118175 A1 5/2007 Butler et al.
2007/0129605 A1 6/2007 Schaaf
2007/0135686 A1 6/2007 Pruitt, Jr. et al.
2007/0135803 A1 6/2007 Belson
2007/0155010 A1 7/2007 Farnsworth et al.
2007/0158358 A1 7/2007 Mason, II et al.
2007/0170225 A1 7/2007 Shelton, IV et al.
2007/0173687 A1 7/2007 Shima et al.
2007/0173806 A1 7/2007 Orszulak et al.
2007/0173813 A1 7/2007 Odom
2007/0175950 A1 8/2007 Shelton, IV et al.
2007/0175951 A1 8/2007 Shelton, IV et al.
2007/0175955 A1 8/2007 Shelton, IV et al.
2007/0179528 A1 8/2007 Soltz et al.
2007/0181632 A1 8/2007 Milliman
2007/0185545 A1 8/2007 Duke
2007/0190110 A1 8/2007 Pameijer et al.
2007/0191868 A1 8/2007 Theroux et al.
2007/0194079 A1 8/2007 Hueil et al.
2007/0194082 A1 8/2007 Morgan et al.
2007/0198039 A1 8/2007 Jones et al.
2007/0203510 A1 8/2007 Bettuchi
2007/0213750 A1 9/2007 Weadock
2007/0219571 A1 9/2007 Balbierz et al.
2007/0225562 A1 9/2007 Spivey et al.
2007/0233163 A1 10/2007 Bombard et al.
2007/0239028 A1 10/2007 Houser et al.
2007/0243227 A1 10/2007 Gertner
2007/0244471 A1 10/2007 Malackowski
2007/0246505 A1 10/2007 Pace-Floridia et al.
2007/0249999 A1 10/2007 Sklar et al.
2007/0250113 A1 10/2007 Hegeman et al.
2007/0260278 A1 11/2007 Wheeler et al.
2007/0270784 A1 11/2007 Smith et al.
2007/0270884 A1 11/2007 Smith et al.
2007/0275035 A1 11/2007 Herman et al.
2007/0276409 A1 11/2007 Ortiz et al.
2007/0279011 A1 12/2007 Jones et al.
2007/0286892 A1 12/2007 Herzberg et al.
2007/0287993 A1 12/2007 Hinman et al.
2007/0288044 A1 12/2007 Jinno et al.
2007/0299427 A1 12/2007 Yeung et al.
2008/0003196 A1 1/2008 Jonn et al.
2008/0015598 A1 1/2008 Prommersberger
2008/0029570 A1 2/2008 Shelton et al.
2008/0029573 A1 2/2008 Shelton et al.
2008/0029574 A1 2/2008 Shelton et al.
2008/0029575 A1 2/2008 Shelton et al.
2008/0030170 A1 2/2008 Dacquay et al.
2008/0035701 A1 2/2008 Racenet et al.
2008/0041916 A1 2/2008 Milliman et al.
2008/0041917 A1 2/2008 Racenet et al.
2008/0051833 A1 2/2008 Gramuglia et al.

(56) **References Cited**

U.S. PATENT DOCUMENTS

2008/0065153 A1 3/2008 Allard et al.
2008/0071328 A1 3/2008 Haubrich et al.
2008/0078802 A1 4/2008 Hess et al.
2008/0082114 A1 4/2008 McKenna et al.
2008/0082125 A1 4/2008 Murray et al.
2008/0082126 A1 4/2008 Murray et al.
2008/0083808 A1 4/2008 Scirica
2008/0083813 A1 4/2008 Zemlok et al.
2008/0085296 A1 4/2008 Powell et al.
2008/0086078 A1 4/2008 Powell et al.
2008/0091072 A1 4/2008 Ornori et al.
2008/0097563 A1 4/2008 Petrie et al.
2008/0108443 A1 5/2008 Jinno et al.
2008/0114250 A1 5/2008 Urbano et al.
2008/0114315 A1 5/2008 Voegele et al.
2008/0114385 A1 5/2008 Byrum et al.
2008/0128469 A1 6/2008 Dalessandro et al.
2008/0129253 A1 6/2008 Shiue et al.
2008/0140115 A1 6/2008 Stopek
2008/0140159 A1 6/2008 Bornhoft et al.
2008/0154299 A1 6/2008 Livneh
2008/0167522 A1* 7/2008 Giordano A61B 17/00 600/104
2008/0169328 A1 7/2008 Shelton
2008/0169332 A1 7/2008 Shelton et al.
2008/0169333 A1 7/2008 Shelton et al.
2008/0172087 A1 7/2008 Fuchs et al.
2008/0172088 A1 7/2008 Smith et al.
2008/0183193 A1 7/2008 Omori et al.
2008/0185419 A1 8/2008 Smith et al.
2008/0190989 A1 8/2008 Crews et al.
2008/0197167 A1 8/2008 Viola et al.
2008/0200762 A1 8/2008 Stokes et al.
2008/0200835 A1 8/2008 Monson et al.
2008/0200933 A1 8/2008 Bakos et al.
2008/0200949 A1 8/2008 Hiles et al.
2008/0228029 A1 9/2008 Mikkaichi et al.
2008/0241667 A1 10/2008 Kohn et al.
2008/0245841 A1 10/2008 Smith et al.
2008/0249608 A1 10/2008 Dave
2008/0251568 A1 10/2008 Zemlok et al.
2008/0251569 A1 10/2008 Smith et al.
2008/0255413 A1 10/2008 Zemlok et al.
2008/0255607 A1 10/2008 Zemlok
2008/0262654 A1 10/2008 Omori et al.
2008/0281171 A1 11/2008 Fennell et al.
2008/0281254 A1 11/2008 Humayun et al.
2008/0283570 A1 11/2008 Boyden et al.
2008/0287944 A1 11/2008 Pearson et al.
2008/0287988 A1 11/2008 Smith et al.
2008/0290134 A1 11/2008 Bettuchi et al.
2008/0294179 A1 11/2008 Balbierz et al.
2008/0296346 A1 12/2008 Shelton, IV et al.
2008/0297287 A1 12/2008 Shachar et al.
2008/0308602 A1 12/2008 Timm et al.
2008/0308603 A1 12/2008 Shelton, IV et al.
2008/0308608 A1 12/2008 Prommersberger
2008/0314960 A1 12/2008 Marczyk et al.
2008/0315829 A1 12/2008 Jones et al.
2009/0001121 A1 1/2009 Hess et al.
2009/0001130 A1 1/2009 Hess et al.
2009/0004455 A1 1/2009 Gravagna et al.
2009/0005809 A1 1/2009 Hess et al.
2009/0012534 A1 1/2009 Madhani et al.
2009/0015195 A1 1/2009 Loth-Krausser
2009/0018553 A1 1/2009 McLean et al.
2009/0020958 A1 1/2009 Soul
2009/0047329 A1 2/2009 Stucky et al.
2009/0048589 A1 2/2009 Takashino et al.
2009/0048612 A1 2/2009 Farritor et al.
2009/0054908 A1 2/2009 Zand et al.
2009/0069842 A1 3/2009 Lee et al.
2009/0076506 A1 3/2009 Baker
2009/0078736 A1 3/2009 Van Lue
2009/0082789 A1 3/2009 Milliman et al.
2009/0088659 A1 4/2009 Graham et al.
2009/0088774 A1 4/2009 Swarup et al.
2009/0090763 A1 4/2009 Zemlok et al.
2009/0092651 A1 4/2009 Shah et al.
2009/0093728 A1 4/2009 Hyde et al.
2009/0099579 A1 4/2009 Nentwick et al.
2009/0099876 A1 4/2009 Whitman
2009/0108048 A1 4/2009 Zemlok et al.
2009/0112229 A1 4/2009 Omori et al.
2009/0114701 A1 5/2009 Zemlok et al.
2009/0119011 A1 5/2009 Kondo et al.
2009/0137952 A1 5/2009 Ramamurthy et al.
2009/0143805 A1 6/2009 Palmer et al.
2009/0143855 A1 6/2009 Weber et al.
2009/0149871 A9 6/2009 Kagan et al.
2009/0157067 A1 6/2009 Kane et al.
2009/0157087 A1 6/2009 Wei et al.
2009/0171147 A1 7/2009 Lee et al.
2009/0177226 A1 7/2009 Reinprecht et al.
2009/0179757 A1 7/2009 Cohn et al.
2009/0188964 A1 7/2009 Orlov
2009/0198272 A1 8/2009 Kerver et al.
2009/0204108 A1 8/2009 Steffen
2009/0204109 A1 8/2009 Grove et al.
2009/0206124 A1* 8/2009 Hall A61B 17/07207 227/175.1
2009/0206125 A1 8/2009 Huitema et al.
2009/0206126 A1 8/2009 Huitema et al.
2009/0206131 A1 8/2009 Weisenburgh, II et al.
2009/0206133 A1 8/2009 Morgan et al.
2009/0206137 A1 8/2009 Hall et al.
2009/0206139 A1 8/2009 Hall et al.
2009/0206141 A1 8/2009 Huitema et al.
2009/0206142 A1 8/2009 Huitema et al.
2009/0213685 A1 8/2009 Mak et al.
2009/0234273 A1 9/2009 Intoccia et al.
2009/0242610 A1 10/2009 Shelton, IV et al.
2009/0247368 A1 10/2009 Chiang
2009/0247901 A1 10/2009 Zimmer
2009/0248007 A1 10/2009 Falkenstein et al.
2009/0248038 A1 10/2009 Blumenkranz et al.
2009/0253959 A1 10/2009 Yoshie
2009/0255974 A1 10/2009 Viola
2009/0255975 A1 10/2009 Zemlok et al.
2009/0255976 A1 10/2009 Marczyk et al.
2009/0255977 A1 10/2009 Zemlok
2009/0255978 A1 10/2009 Viola et al.
2009/0262078 A1 10/2009 Pizzi
2009/0270895 A1 10/2009 Churchill et al.
2009/0277949 A1 11/2009 Viola et al.
2009/0290016 A1 11/2009 Suda
2009/0292283 A1 11/2009 Odom
2009/0306639 A1 12/2009 Nevo et al.
2009/0308907 A1 12/2009 Nalagatla et al.
2010/0010511 A1 1/2010 Harris et al.
2010/0012704 A1 1/2010 Racenet et al.
2010/0016852 A1 1/2010 Manzo et al.
2010/0016888 A1 1/2010 Calabrese et al.
2010/0023024 A1 1/2010 Zeiner et al.
2010/0036370 A1 2/2010 Mirel et al.
2010/0041945 A1 2/2010 Isbell, Jr.
2010/0049084 A1 2/2010 Nock et al.
2010/0057087 A1 3/2010 Cha
2010/0057107 A1 3/2010 Sorrentino et al.
2010/0069942 A1 3/2010 Shelton, IV
2010/0072254 A1 3/2010 Aranyi et al.
2010/0076483 A1 3/2010 Imuta
2010/0076489 A1 3/2010 Stopek et al.
2010/0081883 A1 4/2010 Murray et al.
2010/0087840 A1 4/2010 Ebersole et al.
2010/0094289 A1 4/2010 Taylor et al.
2010/0096431 A1 4/2010 Smith et al.
2010/0100124 A1 4/2010 Calabrese et al.
2010/0108740 A1 5/2010 Pastorelli et al.
2010/0108741 A1 5/2010 Hessler et al.
2010/0122339 A1 5/2010 Boccacci
2010/0133317 A1 6/2010 Shelton, IV et al.
2010/0145146 A1 6/2010 Melder
2010/0147921 A1 6/2010 Olson

(56) **References Cited**

U.S. PATENT DOCUMENTS

2010/0147922 A1 6/2010 Olson
2010/0147923 A1 6/2010 D'Agostino et al.
2010/0163598 A1 7/2010 Belzer
2010/0179022 A1 7/2010 Shirokoshi
2010/0179540 A1 7/2010 Marczyk et al.
2010/0180711 A1 7/2010 Kilibarda et al.
2010/0186219 A1 7/2010 Smith
2010/0191292 A1 7/2010 DeMeo et al.
2010/0193566 A1 8/2010 Schieb et al.
2010/0200637 A1 8/2010 Beetel
2010/0204717 A1 8/2010 Knodel
2010/0222901 A1 9/2010 Swayze et al.
2010/0230465 A1 9/2010 Smith et al.
2010/0243707 A1 9/2010 Olson et al.
2010/0243708 A1 9/2010 Aranyi et al.
2010/0249497 A1 9/2010 Peine et al.
2010/0249519 A1 9/2010 Park et al.
2010/0249759 A1 9/2010 Hinman et al.
2010/0258611 A1 10/2010 Smith et al.
2010/0267662 A1 10/2010 Fielder et al.
2010/0268030 A1 10/2010 Viola et al.
2010/0274160 A1 10/2010 Yachi et al.
2010/0276471 A1 11/2010 Whitman
2010/0292540 A1 11/2010 Hess et al.
2010/0294827 A1 11/2010 Boyden et al.
2010/0298636 A1 11/2010 Castro et al.
2010/0312261 A1 12/2010 Suzuki et al.
2010/0320252 A1 12/2010 Viola et al.
2010/0331856 A1 12/2010 Carlson et al.
2010/0331880 A1 12/2010 Stopek
2011/0003528 A1 1/2011 Lam
2011/0006101 A1 1/2011 Hall et al.
2011/0009890 A1 1/2011 Palmer et al.
2011/0011916 A1 1/2011 Levine
2011/0016960 A1 1/2011 Debrailly
2011/0017799 A1 1/2011 Whitman et al.
2011/0021871 A1 1/2011 Berkelaar
2011/0022032 A1 1/2011 Zemlok et al.
2011/0024477 A1 2/2011 Hall et al.
2011/0024478 A1 2/2011 Shelton, IV
2011/0025311 A1 2/2011 Chauvin et al.
2011/0034910 A1 2/2011 Ross et al.
2011/0034918 A1 2/2011 Reschke
2011/0036887 A1 2/2011 Zemlok et al.
2011/0036890 A1 2/2011 Ma
2011/0036891 A1 2/2011 Zemlok et al.
2011/0045047 A1 2/2011 Bennett et al.
2011/0046666 A1 2/2011 Sorrentino et al.
2011/0046667 A1 2/2011 Culligan et al.
2011/0060356 A1 3/2011 Reschke et al.
2011/0060363 A1 3/2011 Hess et al.
2011/0082538 A1 4/2011 Dahlgren et al.
2011/0084112 A1 4/2011 Kostrzewski
2011/0087276 A1 4/2011 Bedi et al.
2011/0087279 A1 4/2011 Shah et al.
2011/0088921 A1 4/2011 Forgues et al.
2011/0095068 A1 4/2011 Patel
2011/0101065 A1 5/2011 Milliman
2011/0101069 A1 5/2011 Bombard et al.
2011/0112517 A1 5/2011 Peine et al.
2011/0114697 A1 5/2011 Baxter, III et al.
2011/0118778 A1 5/2011 Burbank
2011/0121049 A1 5/2011 Malinouskas et al.
2011/0125138 A1 5/2011 Malinouskas et al.
2011/0125176 A1 5/2011 Yates et al.
2011/0144640 A1 6/2011 Heinrich et al.
2011/0147433 A1 6/2011 Shelton, IV et al.
2011/0155786 A1 6/2011 Shelton, IV
2011/0163146 A1 7/2011 Ortiz et al.
2011/0167619 A1 7/2011 Smith et al.
2011/0174099 A1 7/2011 Ross et al.
2011/0174861 A1 7/2011 Shelton, IV et al.
2011/0178536 A1 7/2011 Kostrzewski
2011/0184459 A1 7/2011 Malkowski et al.
2011/0192882 A1 8/2011 Hess et al.
2011/0199225 A1 8/2011 Touchberry et al.
2011/0208093 A1 8/2011 Gross et al.
2011/0210156 A1 9/2011 Smith et al.
2011/0218550 A1 9/2011 Ma
2011/0241597 A1 10/2011 Zhu et al.
2011/0253765 A1 10/2011 Nicholas et al.
2011/0257650 A1 10/2011 Deville et al.
2011/0264119 A1 10/2011 Bayon et al.
2011/0275901 A1 11/2011 Shelton, IV
2011/0276083 A1 11/2011 Shelton, IV et al.
2011/0278343 A1 11/2011 Knodel et al.
2011/0279268 A1 11/2011 Konishi et al.
2011/0282446 A1 11/2011 Schulte et al.
2011/0290856 A1 12/2011 Shelton, IV et al.
2011/0293690 A1 12/2011 Griffin et al.
2011/0295295 A1 12/2011 Shelton, IV et al.
2011/0307023 A1 12/2011 Tweden et al.
2011/0313894 A1 12/2011 Dye et al.
2011/0315413 A1 12/2011 Fisher et al.
2012/0004636 A1 1/2012 Lo
2012/0016239 A1 1/2012 Barthe et al.
2012/0016413 A1 1/2012 Timm et al.
2012/0018326 A1 1/2012 Racenet et al.
2012/0022523 A1 1/2012 Smith et al.
2012/0022630 A1 1/2012 Wübbeling
2012/0029272 A1 2/2012 Shelton, IV et al.
2012/0033360 A1 2/2012 Hsu
2012/0045303 A1 2/2012 Macdonald
2012/0046692 A1 2/2012 Smith et al.
2012/0064483 A1 3/2012 Lint et al.
2012/0074200 A1 3/2012 Schmid et al.
2012/0078071 A1 3/2012 Bohm et al.
2012/0078244 A1 3/2012 Worrell et al.
2012/0078278 A1 3/2012 Bales, Jr. et al.
2012/0080336 A1 4/2012 Shelton, IV et al.
2012/0080340 A1 4/2012 Shelton, IV et al.
2012/0080344 A1 4/2012 Shelton, IV
2012/0080475 A1 4/2012 Smith et al.
2012/0080478 A1 4/2012 Morgan et al.
2012/0080498 A1 4/2012 Shelton, IV et al.
2012/0089131 A1 4/2012 Zemlok et al.
2012/0110810 A1 5/2012 Houser et al.
2012/0116265 A1 5/2012 Houser et al.
2012/0116367 A1 5/2012 Houser et al.
2012/0116388 A1 5/2012 Houser et al.
2012/0116391 A1 5/2012 Houser et al.
2012/0116395 A1 5/2012 Madan et al.
2012/0123203 A1 5/2012 Riva
2012/0125792 A1 5/2012 Cassivi
2012/0138658 A1 6/2012 Ullrich et al.
2012/0171539 A1 7/2012 Rejman et al.
2012/0175398 A1 7/2012 Sandborn et al.
2012/0187179 A1 7/2012 Gleiman
2012/0209289 A1 8/2012 Duque et al.
2012/0223121 A1 9/2012 Viola et al.
2012/0228355 A1 9/2012 Combrowski et al.
2012/0234895 A1 9/2012 O'Connor et al.
2012/0234897 A1 9/2012 Shelton, IV et al.
2012/0234899 A1 9/2012 Scheib et al.
2012/0241492 A1 9/2012 Shelton, IV et al.
2012/0241493 A1 9/2012 Baxter, III et al.
2012/0248167 A1 10/2012 Flanagan et al.
2012/0248169 A1 10/2012 Widenhouse et al.
2012/0251861 A1 10/2012 Liang et al.
2012/0253329 A1 10/2012 Zemlok et al.
2012/0265176 A1 10/2012 Braun
2012/0271285 A1 10/2012 Sholev et al.
2012/0273550 A1 11/2012 Scirica
2012/0277780 A1 11/2012 Smith et al.
2012/0283707 A1 11/2012 Giordano et al.
2012/0286021 A1 11/2012 Kostrzewski et al.
2012/0289979 A1 11/2012 Eskaros et al.
2012/0292367 A1 11/2012 Morgan et al.
2012/0296333 A1 11/2012 Twomey
2012/0298722 A1 11/2012 Hess et al.
2012/0310255 A1 12/2012 Brisson et al.
2012/0310256 A1 12/2012 Brisson
2012/0312860 A1 12/2012 Ming et al.
2012/0318842 A1 12/2012 Anim et al.

(56) **References Cited**

U.S. PATENT DOCUMENTS

2012/0325892 A1 12/2012 Kostrzewski
2013/0012983 A1 1/2013 Kleyman
2013/0018361 A1 1/2013 Bryant
2013/0020375 A1 1/2013 Shelton, IV et al.
2013/0020376 A1 1/2013 Shelton, IV et al.
2013/0023861 A1 1/2013 Shelton, IV et al.
2013/0026208 A1 1/2013 Shelton, IV et al.
2013/0026210 A1 1/2013 Shelton, IV et al.
2013/0026973 A1 1/2013 Luke et al.
2013/0030608 A1 1/2013 Taylor et al.
2013/0032626 A1 2/2013 Smith et al.
2013/0037596 A1 2/2013 Bear et al.
2013/0046290 A1 2/2013 Palmer et al.
2013/0060278 A1 3/2013 Bozung et al.
2013/0062391 A1 3/2013 Boudreaux et al.
2013/0068816 A1 3/2013 Vasudevan et al.
2013/0075446 A1 3/2013 Wang et al.
2013/0079814 A1 3/2013 Hess et al.
2013/0087597 A1 4/2013 Shelton, IV et al.
2013/0087599 A1 4/2013 Krumanaker et al.
2013/0087602 A1 4/2013 Olson et al.
2013/0090534 A1 4/2013 Burns et al.
2013/0098970 A1 4/2013 Racenet et al.
2013/0103023 A1 4/2013 Monson et al.
2013/0103024 A1 4/2013 Monson et al.
2013/0105548 A1 5/2013 Hodgkinson et al.
2013/0116668 A1 5/2013 Shelton, IV et al.
2013/0116669 A1 5/2013 Shelton, IV et al.
2013/0119108 A1 5/2013 Altman et al.
2013/0123822 A1 5/2013 Wellman et al.
2013/0126379 A1 5/2013 Medhal et al.
2013/0131651 A1 5/2013 Strobl et al.
2013/0146641 A1 6/2013 Shelton, IV et al.
2013/0146642 A1 6/2013 Shelton, IV et al.
2013/0150832 A1 6/2013 Belson et al.
2013/0153633 A1 6/2013 Casasanta, Jr. et al.
2013/0153634 A1 6/2013 Carter et al.
2013/0153635 A1 6/2013 Hodgkinson
2013/0153636 A1 6/2013 Shelton, IV et al.
2013/0153638 A1 6/2013 Calter et al.
2013/0153641 A1 6/2013 Shelton, IV et al.
2013/0161374 A1 6/2013 Swayze et al.
2013/0168431 A1 7/2013 Zemlok et al.
2013/0172929 A1 7/2013 Hess et al.
2013/0175317 A1 7/2013 Yates et al.
2013/0175322 A1 7/2013 Yates et al.
2013/0181033 A1 7/2013 Shelton, IV et al.
2013/0181034 A1 7/2013 Shelton, IV et al.
2013/0186933 A1 7/2013 Shelton, IV et al.
2013/0186934 A1 7/2013 Shelton, IV et al.
2013/0190733 A1 7/2013 Giordano et al.
2013/0190757 A1 7/2013 Yates et al.
2013/0193188 A1 8/2013 Shelton, IV et al.
2013/0193189 A1 8/2013 Swensgard et al.
2013/0197556 A1 8/2013 Shelton, IV et al.
2013/0214025 A1 8/2013 Zemlok et al.
2013/0214030 A1 8/2013 Aronhalt et al.
2013/0221059 A1 8/2013 Racenet et al.
2013/0221063 A1 8/2013 Aronhalt et al.
2013/0221064 A1 8/2013 Aronhalt et al.
2013/0221065 A1 8/2013 Aronhalt et al.
2013/0233905 A1 9/2013 Sorrentino et al.
2013/0233906 A1 9/2013 Hess et al.
2013/0233908 A1 9/2013 Knodel et al.
2013/0238021 A1 9/2013 Gross et al.
2013/0256371 A1 10/2013 Shelton, IV et al.
2013/0256373 A1 10/2013 Schmid et al.
2013/0256374 A1 10/2013 Shelton, IV et al.
2013/0256375 A1 10/2013 Shelton, IV et al.
2013/0256377 A1 10/2013 Schmid et al.
2013/0256378 A1 10/2013 Schmid et al.
2013/0256379 A1 10/2013 Schmid et al.
2013/0256380 A1 10/2013 Schmid et al.
2013/0256382 A1 10/2013 Swayze et al.
2013/0256383 A1 10/2013 Aronhalt et al.
2013/0261648 A1 10/2013 Laurent et al.
2013/0267945 A1 10/2013 Behnke et al.
2013/0270322 A1 10/2013 Scheib et al.
2013/0277412 A1 10/2013 Gresham et al.
2013/0282052 A1 10/2013 Aranyi et al.
2013/0310873 A1 11/2013 Stopek et al.
2013/0313304 A1 11/2013 Shelton, IV et al.
2013/0313306 A1 11/2013 Shelton, IV et al.
2013/0319706 A1 12/2013 Nicholas et al.
2013/0324981 A1 12/2013 Smith et al.
2013/0324982 A1 12/2013 Smith et al.
2013/0327809 A1 12/2013 Shelton, IV et al.
2013/0327810 A1 12/2013 Swayze et al.
2013/0334283 A1 12/2013 Swayze et al.
2013/0334284 A1 12/2013 Swayze et al.
2013/0334285 A1 12/2013 Swayze et al.
2013/0334286 A1 12/2013 Swayze et al.
2013/0334287 A1 12/2013 Shelton, IV
2013/0334288 A1 12/2013 Shelton, IV
2013/0341374 A1 12/2013 Shelton, IV et al.
2014/0001231 A1 1/2014 Shelton, IV et al.
2014/0001234 A1 1/2014 Shelton, IV et al.
2014/0001237 A1 1/2014 Shelton, IV et al.
2014/0001238 A1 1/2014 Shelton, IV et al.
2014/0001239 A1 1/2014 Shelton, IV et al.
2014/0001240 A1 1/2014 Shelton, IV et al.
2014/0003414 A1 1/2014 Shelton, IV et al.
2014/0005640 A1 1/2014 Shelton, IV et al.
2014/0005678 A1 1/2014 Shelton, IV et al.
2014/0005681 A1 1/2014 Gee et al.
2014/0005693 A1 1/2014 Shelton, IV et al.
2014/0005694 A1 1/2014 Shelton, IV et al.
2014/0005702 A1 1/2014 Timm et al.
2014/0005703 A1 1/2014 Stulen et al.
2014/0005718 A1 1/2014 Shelton, IV et al.
2014/0012237 A1 1/2014 Pribanic et al.
2014/0012238 A1 1/2014 Chen et al.
2014/0012289 A1 1/2014 Snow et al.
2014/0014705 A1 1/2014 Baxter, III
2014/0015782 A1 1/2014 Kim et al.
2014/0018832 A1 1/2014 Shelton, IV
2014/0025046 A1 1/2014 Williams et al.
2014/0042205 A1 2/2014 Baxter, III et al.
2014/0048580 A1 2/2014 Merchant et al.
2014/0061279 A1 3/2014 Laurent et al.
2014/0061280 A1 3/2014 Ingmanson et al.
2014/0081176 A1 3/2014 Hassan
2014/0100558 A1 4/2014 Schmitz et al.
2014/0103093 A1 4/2014 Koch, Jr. et al.
2014/0107640 A1 4/2014 Yates et al.
2014/0110455 A1 4/2014 Ingmanson et al.
2014/0128850 A1 5/2014 Kerr et al.
2014/0138423 A1 5/2014 Whitfield et al.
2014/0151431 A1 6/2014 Hodgkinson et al.
2014/0151433 A1 6/2014 Shelton, IV et al.
2014/0166722 A1 6/2014 Hess et al.
2014/0166724 A1 6/2014 Schellin et al.
2014/0166725 A1 6/2014 Schellin et al.
2014/0166726 A1 6/2014 Schellin et al.
2014/0171966 A1 6/2014 Giordano et al.
2014/0175152 A1 6/2014 Hess et al.
2014/0175154 A1 6/2014 Shelton, IV et al.
2014/0191014 A1 7/2014 Shelton, IV
2014/0191015 A1 7/2014 Shelton, IV
2014/0203061 A1 7/2014 Hodgkinson
2014/0205637 A1 7/2014 Widenhouse et al.
2014/0207125 A1 7/2014 Applegate et al.
2014/0207166 A1 7/2014 Shelton, IV et al.
2014/0224857 A1 8/2014 Schmid
2014/0230595 A1 8/2014 Butt et al.
2014/0232316 A1 8/2014 Philipp
2014/0236184 A1 8/2014 Leimbach et al.
2014/0239036 A1 8/2014 Zerkle et al.
2014/0239038 A1 8/2014 Leimbach et al.
2014/0243865 A1 8/2014 Swayze et al.
2014/0246471 A1 9/2014 Jaworek et al.
2014/0246472 A1 9/2014 Kimsey et al.
2014/0246475 A1 9/2014 Hall et al.
2014/0246478 A1 9/2014 Baber et al.

(56) **References Cited**

U.S. PATENT DOCUMENTS

2014/0246479 A1 9/2014 Baber et al.
2014/0249557 A1 9/2014 Koch, Jr. et al.
2014/0252066 A1 9/2014 Shelton, IV et al.
2014/0252068 A1 9/2014 Shelton, IV et al.
2014/0259591 A1 9/2014 Shelton, IV et al.
2014/0263538 A1 9/2014 Leimbach et al.
2014/0263539 A1 9/2014 Leimbach et al.
2014/0263541 A1 9/2014 Leimbach et al.
2014/0263542 A1 9/2014 Leimbach et al.
2014/0263552 A1 9/2014 Hall et al.
2014/0263554 A1 9/2014 Leimbach et al.
2014/0263558 A1 9/2014 Hausen et al.
2014/0263562 A1 9/2014 Patel et al.
2014/0263564 A1 9/2014 Leimbach et al.
2014/0263565 A1 9/2014 Lytle, IV et al.
2014/0263572 A1 9/2014 Shelton, IV et al.
2014/0277017 A1 9/2014 Leimbach et al.
2014/0284371 A1 9/2014 Morgan et al.
2014/0284373 A1 9/2014 Shelton, IV et al.
2014/0291378 A1 10/2014 Shelton, IV et al.
2014/0291379 A1 10/2014 Schellin et al.
2014/0291380 A1 10/2014 Weaner et al.
2014/0291382 A1 10/2014 Lloyd et al.
2014/0291383 A1 10/2014 Spivey et al.
2014/0296873 A1 10/2014 Morgan et al.
2014/0296874 A1 10/2014 Morgan et al.
2014/0299648 A1 10/2014 Shelton, IV et al.
2014/0303645 A1 10/2014 Morgan et al.
2014/0303646 A1 10/2014 Morgan et al.
2014/0305987 A1 10/2014 Parihar et al.
2014/0305988 A1 10/2014 Boudreaux et al.
2014/0305989 A1 10/2014 Parihar et al.
2014/0305990 A1 10/2014 Shelton, IV et al.
2014/0305991 A1 10/2014 Parihar et al.
2014/0305992 A1 10/2014 Kimsey et al.
2014/0305994 A1 10/2014 Parihar et al.
2014/0309665 A1 10/2014 Parihar et al.
2014/0309666 A1 10/2014 Shelton, IV et al.
2014/0330161 A1 11/2014 Swayze et al.
2014/0339286 A1 11/2014 Motooka et al.
2014/0352463 A1 12/2014 Parihar
2014/0353358 A1 12/2014 Shelton, IV et al.
2014/0367447 A1 12/2014 Woodard, Jr. et al.
2014/0378950 A1 12/2014 Chiu
2015/0008248 A1 1/2015 Giordano et al.
2015/0034696 A1 2/2015 Shelton, IV et al.
2015/0038986 A1 2/2015 Swensgard et al.
2015/0041518 A1 2/2015 Shelton, IV et al.
2015/0053737 A1 2/2015 Leimbach et al.
2015/0053738 A1 2/2015 Morgan et al.
2015/0053739 A1 2/2015 Morgan et al.
2015/0053740 A1 2/2015 Shelton, IV
2015/0053741 A1 2/2015 Shelton, IV et al.
2015/0053742 A1 2/2015 Shelton, IV et al.
2015/0053743 A1 2/2015 Yates et al.
2015/0053744 A1 2/2015 Swayze et al.
2015/0053745 A1 2/2015 Yates et al.
2015/0053746 A1 2/2015 Shelton, IV et al.
2015/0053748 A1 2/2015 Yates et al.
2015/0060518 A1 3/2015 Shelton, IV et al.
2015/0060519 A1 3/2015 Shelton, IV et al.
2015/0060520 A1 3/2015 Shelton, IV et al.
2015/0060521 A1 3/2015 Weisenburgh, II et al.
2015/0076207 A1 3/2015 Boudreaux et al.
2015/0076208 A1 3/2015 Shelton, IV
2015/0076209 A1 3/2015 Shelton, IV et al.
2015/0076210 A1 3/2015 Shelton, IV et al.
2015/0076212 A1 3/2015 Shelton, IV
2015/0080868 A1 3/2015 Kerr
2015/0083780 A1 3/2015 Shelton, IV et al.
2015/0083781 A1 3/2015 Giordano et al.
2015/0083782 A1 3/2015 Scheib et al.
2015/0083783 A1 3/2015 Shelton, IV et al.
2015/0090759 A1 4/2015 Spivey et al.
2015/0090760 A1 4/2015 Giordano et al.
2015/0090761 A1 4/2015 Giordano et al.
2015/0090762 A1 4/2015 Giordano et al.
2015/0090763 A1 4/2015 Murray et al.
2015/0108199 A1 4/2015 Shelton, IV et al.
2015/0122869 A1 5/2015 Aronhalt et al.
2015/0136830 A1 5/2015 Baxter, III et al.
2015/0136831 A1 5/2015 Baxter, III et al.
2015/0136832 A1 5/2015 Baxter, III et al.
2015/0136833 A1 5/2015 Shelton, IV et al.
2015/0136835 A1 5/2015 Shelton, IV et al.
2015/0157354 A1 6/2015 Bales, Jr. et al.
2015/0173744 A1 6/2015 Shelton, IV et al.
2015/0173745 A1 6/2015 Baxter, III et al.
2015/0173746 A1 6/2015 Baxter, III et al.
2015/0173747 A1 6/2015 Baxter, III et al.
2015/0173749 A1 6/2015 Shelton, IV et al.
2015/0173750 A1 6/2015 Shelton, IV et al.
2015/0173751 A1 6/2015 Shelton, IV et al.
2015/0173755 A1 6/2015 Baxter, III et al.
2015/0173756 A1 6/2015 Baxter, III et al.
2015/0173760 A1 6/2015 Shelton, IV et al.
2015/0173761 A1 6/2015 Shelton, IV et al.
2015/0173762 A1 6/2015 Shelton, IV et al.
2015/0173789 A1 6/2015 Baxter, III et al.
2015/0182220 A1 7/2015 Yates et al.
2015/0182222 A1 7/2015 Swayze et al.
2015/0196295 A1 7/2015 Shelton, IV et al.
2015/0196296 A1 7/2015 Swayze et al.
2015/0196299 A1 7/2015 Swayze et al.
2015/0196347 A1 7/2015 Yates et al.
2015/0196348 A1 7/2015 Yates et al.
2015/0201932 A1 7/2015 Swayze et al.
2015/0201935 A1 7/2015 Weisenburgh, II et al.
2015/0201936 A1 7/2015 Swayze et al.
2015/0201937 A1 7/2015 Swayze et al.
2015/0201938 A1 7/2015 Swayze et al.
2015/0201939 A1 7/2015 Swayze et al.
2015/0201940 A1 7/2015 Swayze et al.
2015/0201941 A1 7/2015 Swayze et al.
2015/0209031 A1 7/2015 Shelton, IV et al.
2015/0209038 A1 7/2015 Shelton, IV et al.
2015/0209039 A1 7/2015 Shelton, IV et al.
2015/0209041 A1 7/2015 Milliman et al.
2015/0223809 A1 8/2015 Scheib et al.
2015/0223816 A1 8/2015 Morgan et al.
2015/0230783 A1 8/2015 Shelton, IV et al.
2015/0230784 A1 8/2015 Shelton, IV et al.
2015/0231409 A1 8/2015 Racenet et al.
2015/0238185 A1 8/2015 Schellin et al.
2015/0238186 A1 8/2015 Aronhalt et al.
2015/0238187 A1 8/2015 Schellin et al.
2015/0238188 A1 8/2015 Vendely et al.
2015/0238191 A1 8/2015 Schellin et al.
2015/0239180 A1 8/2015 Schellin et al.
2015/0265276 A1 9/2015 Huitema et al.
2015/0265357 A1 9/2015 Shelton, IV et al.
2015/0272557 A1 10/2015 Overmyer et al.
2015/0272569 A1 10/2015 Leimbach et al.
2015/0272570 A1 10/2015 Lytle, IV et al.
2015/0272571 A1 10/2015 Leimbach et al.
2015/0272572 A1 10/2015 Overmyer et al.
2015/0272574 A1 10/2015 Leimbach et al.
2015/0272575 A1 10/2015 Leimbach et al.
2015/0272578 A1 10/2015 Leimbach et al.
2015/0272579 A1 10/2015 Leimbach et al.
2015/0272580 A1 10/2015 Leimbach et al.
2015/0272581 A1 10/2015 Leimbach et al.
2015/0272582 A1 10/2015 Leimbach et al.
2015/0272583 A1 10/2015 Leimbach et al.
2015/0277471 A1 10/2015 Leimbach et al.
2015/0280384 A1 10/2015 Leimbach et al.
2015/0280424 A1 10/2015 Leimbach et al.
2015/0282809 A1 10/2015 Shelton, IV et al.
2015/0282810 A1 10/2015 Shelton, IV et al.
2015/0289873 A1 10/2015 Shelton, IV et al.
2015/0289874 A1 10/2015 Leimbach et al.
2015/0297210 A1 10/2015 Widenhouse et al.
2015/0297217 A1 10/2015 Huitema et al.
2015/0297218 A1 10/2015 Shelton, IV et al.

(56) **References Cited**

U.S. PATENT DOCUMENTS

2015/0297219 A1 10/2015 Shelton, IV et al.
2015/0297221 A1 10/2015 Kerr et al.
2015/0297222 A1 10/2015 Huitema et al.
2015/0297223 A1 10/2015 Huitema et al.
2015/0297224 A1 10/2015 Hall et al.
2015/0297225 A1 10/2015 Huiterna et al.
2015/0297226 A1 10/2015 Hall et al.
2015/0297227 A1 10/2015 Huitema et al.
2015/0297228 A1 10/2015 Huitema et al.
2015/0297229 A1 10/2015 Schellin et al.
2015/0297230 A1 10/2015 Schellin et al.
2015/0297231 A1 10/2015 Huitema et al.
2015/0297232 A1 10/2015 Huitema et al.
2015/0297233 A1 10/2015 Huitema et al.
2015/0297234 A1 10/2015 Schellin et al.
2015/0297235 A1 10/2015 Harris et al.
2015/0297236 A1 10/2015 Harris et al.
2015/0305744 A1 10/2015 Moore et al.
2015/0305745 A1 10/2015 Baxter, III et al.
2015/0313591 A1 11/2015 Baxter, III et al.
2015/0313594 A1 11/2015 Shelton, IV et al.
2015/0327853 A1 11/2015 Aronhalt et al.
2015/0327864 A1 11/2015 Hodgkinson et al.
2015/0335328 A1 11/2015 Shelton, IV et al.
2015/0335329 A1 11/2015 Shelton, IV et al.
2015/0342606 A1 12/2015 Schmid et al.
2015/0342607 A1 12/2015 Shelton, IV et al.
2015/0359536 A1 12/2015 Cropper et al.
2015/0374368 A1 12/2015 Swayze et al.
2015/0374369 A1 12/2015 Yates et al.
2015/0374374 A1 12/2015 Shelton, IV et al.
2015/0374375 A1 12/2015 Shelton, IV et al.
2015/0374376 A1 12/2015 Shelton, IV
2015/0374377 A1 12/2015 Shelton, IV
2015/0374378 A1 12/2015 Giordano et al.
2015/0374379 A1 12/2015 Shelton, IV
2016/0000430 A1 1/2016 Ming et al.
2016/0000431 A1 1/2016 Giordano et al.
2016/0000432 A1 1/2016 Huang et al.
2016/0000437 A1 1/2016 Giordano et al.
2016/0000438 A1 1/2016 Swayze et al.
2016/0000439 A1 1/2016 Weisenburgh, II et al.
2016/0000440 A1 1/2016 Weisenburgh, II et al.
2016/0000441 A1 1/2016 Shelton, IV et al.
2016/0000442 A1 1/2016 Shelton, IV
2016/0000452 A1 1/2016 Yates et al.
2016/0000453 A1 1/2016 Yates et al.
2016/0000513 A1 1/2016 Shelton, IV et al.
2016/0007992 A1 1/2016 Yates et al.
2016/0008023 A1 1/2016 Yates et al.
2016/0015390 A1 1/2016 Timm et al.
2016/0015391 A1 1/2016 Shelton, IV et al.
2016/0051257 A1 2/2016 Shelton, IV et al.
2016/0058443 A1 3/2016 Yates et al.
2016/0066909 A1 3/2016 Baber et al.
2016/0066910 A1 3/2016 Baber et al.
2016/0066911 A1 3/2016 Baber et al.
2016/0066912 A1 3/2016 Baber et al.
2016/0066913 A1 3/2016 Swayze et al.
2016/0066914 A1 3/2016 Baber et al.
2016/0066915 A1 3/2016 Baber et al.
2016/0066916 A1 3/2016 Overmyer et al.
2016/0069449 A1 3/2016 Kanai et al.
2016/0074038 A1 3/2016 Leimbach et al.
2016/0074040 A1 3/2016 Widenhouse et al.
2016/0089137 A1 3/2016 Hess et al.
2016/0089141 A1 3/2016 Harris et al.
2016/0089142 A1 3/2016 Harris et al.
2016/0089143 A1 3/2016 Harris et al.
2016/0089146 A1 3/2016 Harris et al.
2016/0089147 A1 3/2016 Harris et al.
2016/0089148 A1 3/2016 Harris et al.
2016/0089149 A1 3/2016 Harris et al.
2016/0100837 A1 4/2016 Huang et al.
2016/0106426 A1 4/2016 Shelton, IV et al.
2016/0106427 A1 4/2016 Shelton, IV et al.
2016/0106431 A1 4/2016 Shelton, IV et al.
2016/0113653 A1 4/2016 Zingman
2016/0120544 A1 5/2016 Shelton, IV et al.
2016/0120545 A1 5/2016 Shelton, IV et al.
2016/0120547 A1 5/2016 Schmid et al.
2016/0128694 A1 5/2016 Baxter, III et al.
2016/0135812 A1 5/2016 Shelton, IV et al.
2016/0166256 A1 6/2016 Baxter, III et al.
2016/0174969 A1 6/2016 Kerr et al.
2016/0174970 A1 6/2016 Shelton, IV et al.
2016/0174971 A1 6/2016 Baxter, III et al.
2016/0174972 A1 6/2016 Shelton, IV et al.
2016/0174973 A1 6/2016 Shelton, IV et al.
2016/0174974 A1 6/2016 Schmid et al.
2016/0174975 A1 6/2016 Shelton, IV et al.
2016/0174976 A1 6/2016 Morgan et al.
2016/0174977 A1 6/2016 Lytle, IV et al.
2016/0174978 A1 6/2016 Overmyer et al.
2016/0174983 A1 6/2016 Shelton, IV et al.
2016/0174984 A1 6/2016 Smith et al.
2016/0174985 A1 6/2016 Baxter, III et al.
2016/0183939 A1 6/2016 Shelton, IV et al.
2016/0183943 A1 6/2016 Shelton, IV
2016/0183944 A1 6/2016 Swensgard et al.
2016/0183945 A1 6/2016 Shelton, IV et al.
2016/0183947 A1 6/2016 Shelton, IV et al.
2016/0183948 A1 6/2016 Shelton, IV et al.
2016/0183950 A1 6/2016 Shelton, IV et al.
2016/0184039 A1 6/2016 Shelton, IV et al.
2016/0192916 A1 7/2016 Shelton, IV et al.
2016/0192917 A1 7/2016 Shelton, Iv et al.
2016/0192918 A1 7/2016 Shelton, IV et al.
2016/0192929 A1 7/2016 Schmid et al.
2016/0192933 A1 7/2016 Shelton, IV
2016/0192936 A1 7/2016 Leimbach et al.
2016/0192996 A1 7/2016 Spivey et al.
2016/0192997 A1 7/2016 Spivey et al.
2016/0199059 A1 7/2016 Shelton, IV et al.
2016/0199061 A1 7/2016 Shelton, IV et al.
2016/0199063 A1 7/2016 Vasudevan et al.
2016/0199064 A1 7/2016 Shelton, IV et al.
2016/0199088 A1 7/2016 Shelton, IV et al.
2016/0199089 A1 7/2016 Hess et al.
2016/0199956 A1 7/2016 Shelton, IV et al.
2016/0206309 A1 7/2016 Hess
2016/0206310 A1 7/2016 Shelton, IV
2016/0206314 A1 7/2016 Scheib et al.
2016/0220246 A1 8/2016 Timm et al.
2016/0220247 A1 8/2016 Timm et al.
2016/0220248 A1 8/2016 Timm et al.
2016/0220249 A1 8/2016 Shelton, IV et al.
2016/0220254 A1 8/2016 Baxter, III et al.
2016/0220266 A1 8/2016 Shelton, IV et al.
2016/0220268 A1 8/2016 Shelton, IV et al.
2016/0235403 A1 8/2016 Shelton, IV et al.
2016/0235404 A1 8/2016 Shelton, IV
2016/0235405 A1 8/2016 Shelton, IV et al.
2016/0235406 A1 8/2016 Shelton, IV et al.
2016/0235408 A1 8/2016 Shelton, IV et al.
2016/0235409 A1 8/2016 Shelton, IV et al.
2016/0235494 A1 8/2016 Shelton, IV et al.
2016/0238108 A1 8/2016 Kanai et al.
2016/0242768 A1 8/2016 Moore et al.
2016/0242769 A1 8/2016 Moore et al.
2016/0242770 A1 8/2016 Moore et al.
2016/0242775 A1 8/2016 Shelton, IV et al.
2016/0242776 A1 8/2016 Shelton, IV et al.
2016/0242777 A1 8/2016 Shelton, IV et al.
2016/0242780 A1 8/2016 Shelton, IV et al.
2016/0242781 A1 8/2016 Shelton, IV et al.
2016/0242782 A1 8/2016 Shelton, IV et al.
2016/0242783 A1 8/2016 Shelton, IV et al.
2016/0249908 A1 9/2016 Shelton, IV et al.
2016/0249909 A1 9/2016 Shelton, IV et al.
2016/0249910 A1 9/2016 Shelton, IV et al.
2016/0249911 A1 9/2016 Timm et al.
2016/0249915 A1 9/2016 Beckman et al.
2016/0249916 A1 9/2016 Shelton, IV et al.

(56) **References Cited**

U.S. PATENT DOCUMENTS

2016/0249917	A1	9/2016	Beckman et al.
2016/0249918	A1	9/2016	Shelton, IV et al.
2016/0249919	A1	9/2016	Savage et al.
2016/0249922	A1	9/2016	Morgan et al.
2016/0249927	A1	9/2016	Beckman et al.
2016/0249930	A1	9/2016	Hail et al.
2016/0249945	A1	9/2016	Shelton, IV et al.
2016/0256071	A1	9/2016	Shelton, IV et al.
2016/0256153	A1	9/2016	Shelton, IV et al.
2016/0256154	A1	9/2016	Shelton, IV et al.
2016/0256155	A1	9/2016	Shelton, IV et al.
2016/0256156	A1	9/2016	Shelton, IV et al.
2016/0256160	A1	9/2016	Shelton, IV et al.
2016/0256161	A1	9/2016	Overmyer et al.
2016/0256162	A1	9/2016	Shelton, IV et al.
2016/0256163	A1	9/2016	Shelton, IV et al.
2016/0256184	A1	9/2016	Shelton, IV et al.
2016/0256185	A1	9/2016	Shelton, IV et al.
2016/0256186	A1	9/2016	Shelton, IV et al.
2016/0256187	A1	9/2016	Shelton, IV et al.
2016/0256229	A1	9/2016	Morgan et al.
2016/0262745	A1	9/2016	Morgan et al.
2016/0262746	A1	9/2016	Shelton, IV et al.
2016/0262760	A1	9/2016	Shelton, IV et al.
2016/0270780	A1	9/2016	Hall et al.
2016/0287249	A1	10/2016	Alexander, III et al.
2016/0287250	A1	10/2016	Shelton, IV et al.
2016/0287251	A1	10/2016	Shelton, IV et al.
2016/0287253	A1	10/2016	Shelton, IV et al.
2016/0287254	A1	10/2016	Baxter, III et al.
2016/0331375	A1	11/2016	Shelton, IV et al.
2017/0014129	A1	1/2017	Shelton, IV et al.

FOREIGN PATENT DOCUMENTS

AU	2012200178	B2	7/2013
CA	2458946	A1	3/2003
CA	2477181	A1	4/2004
CA	2512960	A1	1/2006
CA	2514274	A1	1/2006
CA	2639177	A1	2/2009
CA	2576347	C	8/2015
CN	86100996	A	9/1986
CN	1163558	A	10/1997
CN	2488482	Y	5/2002
CN	1424891	A	6/2003
CN	1523725	A	8/2004
CN	1545154	A	11/2004
CN	1634601	A	7/2005
CN	1636526	A	7/2005
CN	2718900	Y	8/2005
CN	2738962	Y	11/2005
CN	1726874	A	2/2006
CN	1726878	A	2/2006
CN	1868411	A	11/2006
CN	1915180	A	2/2007
CN	2368212	Y	2/2007
CN	1960679	A	5/2007
CN	101011286	A	8/2007
CN	101073509	A	11/2007
CN	101095621	A	1/2008
CN	101111196	A	1/2008
CN	101137402	A	3/2008
CN	101224122	A	7/2008
CN	101224124	A	7/2008
CN	101254126	A	9/2008
CN	101507620	A	8/2009
CN	101507622	A	8/2009
CN	101507623	A	8/2009
CN	101507625	A	8/2009
CN	101507628	A	8/2009
CN	101534724	A	9/2009
CN	101541251	A	9/2009
CN	101626731	A	1/2010
CN	101675898	A	3/2010
CN	101683280	A	3/2010
CN	101801284	A	8/2010
CN	101868203	A	10/2010
CN	101873834	A	10/2010
CN	101912285	A	12/2010
CN	101028205	B	1/2011
CN	101933824	A	1/2011
CN	101934098	A	5/2011
CN	102038531	A	5/2011
CN	102038532	A	5/2011
CN	101534722	B	6/2011
CN	201949071	U	8/2011
CN	101336835	B	9/2011
CN	102188270	A	9/2011
CN	101779977	B	12/2011
CN	101534723	B	1/2012
CN	101310680	B	4/2012
CN	101912284	B	7/2012
CN	202397539	U	8/2012
CN	101317782	B	10/2012
CN	101507639	B	11/2012
CN	102835977	A	12/2012
CN	101507633	B	2/2013
CN	101023879	B	3/2013
CN	101507624	B	3/2013
CN	101327137	B	6/2013
CN	101401736	B	6/2013
CN	101332110	B	7/2013
CN	101683281	B	1/2014
CN	103648408	A	3/2014
CN	103908313	A	7/2014
CN	102783741	B	10/2014
CN	102973300	B	10/2014
CN	102793571	B	12/2014
CN	102166129	B	3/2015
CN	102113902	B	4/2015
CN	102247177	B	2/2016
DE	273689	C	5/1914
DE	1775926	A	1/1972
DE	3036217	A1	4/1982
DE	3212828	A1	11/1982
DE	3210466	A1	9/1983
DE	3709067	A1	9/1988
DE	4228909	A1	3/1994
DE	9412228	U1	9/1994
DE	19509116	A1	9/1996
DE	19534043	A1	3/1997
DE	19707373	C1	2/1998
DE	19851291	A1	1/2000
DE	19924311	A1	11/2000
DE	69328576	T2	1/2001
DE	20016423	U1	2/2001
DE	10052679	A1	5/2001
DE	20112837	U1	10/2001
DE	20121753	U1	4/2003
DE	10314827	B3	4/2004
DE	10314072	A1	10/2004
DE	202004012389	U1	11/2004
DE	202007003114	U1	6/2007
DE	102010013150	A1	9/2011
EP	0000756	A1	2/1979
EP	0122046	A1	10/1984
EP	0070230	B1	10/1985
EP	0156774	A2	10/1985
EP	0033548	B1	5/1986
EP	0077262	B1	8/1986
EP	0189807	A2	8/1986
EP	0212278	A2	3/1987
EP	0129442	B1	11/1987
EP	0255631	A1	2/1988
EP	0276104	A2	7/1988
EP	0379721	B1	8/1990
EP	0178940	B1	1/1991
EP	0178941	B1	1/1991
EP	0169044	B1	6/1991
EP	0248844	B1	1/1993
EP	0539762	A1	5/1993
EP	0545029	A1	6/1993
EP	0548998	A1	6/1993

(56) **References Cited**

FOREIGN PATENT DOCUMENTS

EP	0277959	B1	10/1993
EP	0591946	A1	10/1993
EP	0233940	B1	11/1993
EP	0261230	B1	11/1993
EP	0639349	A2	2/1994
EP	0324636	B1	3/1994
EP	0593920	A1	4/1994
EP	0594148	A1	4/1994
EP	0427949	B1	6/1994
EP	0523174	B1	6/1994
EP	0600182	A2	6/1994
EP	0310431	B1	11/1994
EP	0375302	B1	11/1994
EP	0376562	B1	11/1994
EP	0623311	A2	11/1994
EP	0630612	A1	12/1994
EP	0630614	A1	12/1994
EP	0634144	A1	1/1995
EP	0646356	A2	4/1995
EP	0646357	A1	4/1995
EP	0505036	B1	5/1995
EP	0653189	A2	5/1995
EP	0659104	A1	8/1995
EP	0387980	B1	10/1995
EP	0511470	B1	10/1995
EP	0674876	A2	10/1995
EP	0679367	A2	11/1995
EP	0392547	B1	12/1995
EP	0685204	A1	12/1995
EP	0686374	A2	12/1995
EP	0364216	B1	1/1996
EP	0699418	A1	3/1996
EP	0702937	A1	3/1996
EP	0488768	B1	4/1996
EP	0705571	A1	4/1996
EP	0528478	B1	5/1996
EP	0711611	A2	5/1996
EP	0484677	B2	6/1996
EP	0541987	B1	7/1996
EP	0667119	B1	7/1996
EP	0737446	A1	10/1996
EP	0748614	A1	12/1996
EP	0708618	B1	3/1997
EP	0770355	A1	5/1997
EP	0503662	B1	6/1997
EP	0447121	B1	7/1997
EP	0621009	B1	7/1997
EP	0625077	B1	7/1997
EP	0633749	B1	8/1997
EP	0710090	B1	8/1997
EP	0573425	B1	9/1997
EP	0623312	B1	9/1997
EP	0621006	B1	10/1997
EP	0625335	B1	11/1997
EP	0552423	B1	1/1998
EP	0592244	B1	1/1998
EP	0648476	B1	1/1998
EP	0649290	B1	3/1998
EP	0598618	B1	9/1998
EP	0676173	B1	9/1998
EP	0678007	B1	9/1998
EP	0869104	A1	10/1998
EP	0603472	B1	11/1998
EP	0605351	B1	11/1998
EP	0878169	A1	11/1998
EP	0879742	A1	11/1998
EP	0695144	B1	12/1998
EP	0722296	B1	12/1998
EP	0760230	B1	2/1999
EP	0623316	B1	3/1999
EP	0650701	B1	3/1999
EP	0537572	B1	6/1999
EP	0923907	A1	6/1999
EP	0640317	B1	9/1999
EP	0843906	B1	3/2000
EP	0552050	B1	5/2000
EP	0833592	B1	5/2000
EP	0832605	B1	6/2000
EP	0830094	B1	9/2000
EP	1034747	A1	9/2000
EP	1034748	A1	9/2000
EP	0694290	B1	11/2000
EP	1050278	A1	11/2000
EP	1053719	A1	11/2000
EP	1053720	A1	11/2000
EP	1055399	A1	11/2000
EP	1055400	A1	11/2000
EP	1058177	A1	12/2000
EP	1080694	A1	3/2001
EP	1090592	A1	4/2001
EP	1095627	A1	5/2001
EP	0806914	B1	9/2001
EP	0768840	B1	12/2001
EP	0908152	B1	1/2002
EP	0717959	B1	2/2002
EP	0872213	B1	5/2002
EP	0862386	B1	6/2002
EP	0949886	B1	9/2002
EP	1238634	A2	9/2002
EP	0858295	B1	12/2002
EP	0656188	B1	1/2003
EP	0717960	B1	2/2003
EP	1284120	A1	2/2003
EP	1287788	A1	3/2003
EP	0717966	B1	4/2003
EP	0869742	B1	5/2003
EP	0829235	B1	6/2003
EP	0887046	B1	7/2003
EP	1323384	A2	7/2003
EP	0852480	B1	8/2003
EP	0891154	B1	9/2003
EP	0813843	B1	10/2003
EP	0873089	B1	10/2003
EP	0856326	B1	11/2003
EP	1374788	A1	1/2004
EP	0741996	B1	2/2004
EP	0814712	B1	2/2004
EP	1402837	A1	3/2004
EP	0705570	B1	4/2004
EP	0959784	B1	4/2004
EP	1407719	A2	4/2004
EP	1411626	A2	4/2004
EP	1086713	B1	5/2004
EP	0996378	B1	6/2004
EP	1426012	A1	6/2004
EP	0833593	B2	7/2004
EP	1442694	A1	8/2004
EP	0888749	B1	9/2004
EP	0959786	B1	9/2004
EP	1453432	A2	9/2004
EP	1459695	A1	9/2004
EP	1254636	B1	10/2004
EP	1473819	A1	11/2004
EP	1477119	A1	11/2004
EP	1479345	A1	11/2004
EP	1479347	A1	11/2004
EP	1479348	A1	11/2004
EP	0754437	B2	12/2004
EP	1025807	B1	12/2004
EP	1001710	B1	1/2005
EP	1496805	A2	1/2005
EP	1256318	B1	2/2005
EP	1520521	A1	4/2005
EP	1520522	A1	4/2005
EP	1520523	A1	4/2005
EP	1520525	A1	4/2005
EP	1522264	A1	4/2005
EP	1523942	A2	4/2005
EP	1550408	A1	7/2005
EP	1557129	A1	7/2005
EP	1064883	B1	8/2005
EP	1067876	B1	8/2005
EP	0870473	B1	9/2005
EP	1157666	B1	9/2005

(56) **References Cited**

FOREIGN PATENT DOCUMENTS

EP	0880338	B1	10/2005
EP	1158917	B1	11/2005
EP	1344498	B1	11/2005
EP	0906764	B1	12/2005
EP	1330989	B1	12/2005
EP	0771176	B2	1/2006
EP	1621138	A2	2/2006
EP	1621139	A2	2/2006
EP	1621141	A2	2/2006
EP	1621143	A2	2/2006
EP	1621145	A2	2/2006
EP	1621151	A2	2/2006
EP	1034746	B1	3/2006
EP	1201196	B1	3/2006
EP	1632191	A2	3/2006
EP	1647231	A1	4/2006
EP	1065981	B1	5/2006
EP	1082944	B1	5/2006
EP	1230899	B1	5/2006
EP	1652481	A2	5/2006
EP	1382303	B1	6/2006
EP	1253866	B1	7/2006
EP	1676539	A1	7/2006
EP	1032318	B1	8/2006
EP	1045672	B1	8/2006
EP	1617768	B1	8/2006
EP	1693015	A2	8/2006
EP	1400214	B1	9/2006
EP	1702567	A2	9/2006
EP	1129665	B1	11/2006
EP	1400206	B1	11/2006
EP	1721568	A1	11/2006
EP	1256317	B1	12/2006
EP	1285633	B1	12/2006
EP	1728473	A1	12/2006
EP	1728475	A2	12/2006
EP	1736105	A1	12/2006
EP	1011494	B1	1/2007
EP	1479346	B1	1/2007
EP	1484024	B1	1/2007
EP	1749485	A1	2/2007
EP	1754445	A2	2/2007
EP	1759812	A1	3/2007
EP	1767157	A1	3/2007
EP	1767163	A1	3/2007
EP	1563792	B1	4/2007
EP	1769756	A1	4/2007
EP	1769758	A1	4/2007
EP	1581128	B1	5/2007
EP	1780825	A1	5/2007
EP	1785097	A2	5/2007
EP	1790293	A2	5/2007
EP	1790294	A1	5/2007
EP	1563793	B1	6/2007
EP	1791473	A2	6/2007
EP	1800610	A1	6/2007
EP	1300117	B1	8/2007
EP	1813199	A1	8/2007
EP	1813200	A2	8/2007
EP	1813201	A1	8/2007
EP	1813202	A1	8/2007
EP	1813203	A2	8/2007
EP	1813207	A1	8/2007
EP	1813209	A1	8/2007
EP	1815950	A1	8/2007
EP	1330991	B1	9/2007
EP	1806103	B1	9/2007
EP	1837041	A1	9/2007
EP	0922435	B1	10/2007
EP	1487359	B1	10/2007
EP	1599146	B1	10/2007
EP	1839596	A1	10/2007
EP	2110083	A2	10/2007
EP	1679096	B1	11/2007
EP	1857057	A2	11/2007
EP	1402821	B1	12/2007
EP	1872727	A1	1/2008
EP	1550410	B1	2/2008
EP	1671593	B1	2/2008
EP	1897502	A1	3/2008
EP	1611856	B1	4/2008
EP	1908417	A2	4/2008
EP	1917929	A1	5/2008
EP	1330201	B1	6/2008
EP	1702568	B1	7/2008
EP	1943955	A2	7/2008
EP	1943957	A2	7/2008
EP	1943959	A1	7/2008
EP	1943962	A2	7/2008
EP	1943964	A1	7/2008
EP	1943976	A2	7/2008
EP	1593337	B1	8/2008
EP	1970014	A1	9/2008
EP	1974678	A2	10/2008
EP	1980213	A2	10/2008
EP	1980214	A2	10/2008
EP	1759645	B1	11/2008
EP	1987780	A2	11/2008
EP	1990014	A2	11/2008
EP	1992296	A1	11/2008
EP	1552795	B1	12/2008
EP	1693008	B1	12/2008
EP	1759640	B1	12/2008
EP	1997439	A2	12/2008
EP	2000101	A2	12/2008
EP	2000102	A2	12/2008
EP	2005894	A2	12/2008
EP	2005897	A2	12/2008
EP	2005901	A1	12/2008
EP	2008595	A2	12/2008
EP	2025293	A1	2/2009
EP	1736104	B1	3/2009
EP	1749486	B1	3/2009
EP	1782743	B1	3/2009
EP	2039302	A2	3/2009
EP	2039308	A2	3/2009
EP	2039316	A2	3/2009
EP	1721576	B1	4/2009
EP	1733686	B1	4/2009
EP	2044890	A1	4/2009
EP	2055243	A2	5/2009
EP	1550409	B1	6/2009
EP	1550413	B1	6/2009
EP	1719461	B1	6/2009
EP	1834594	B1	6/2009
EP	1709911	B1	7/2009
EP	2077093	A2	7/2009
EP	1745748	B1	8/2009
EP	2090231	A1	8/2009
EP	2090237	A1	8/2009
EP	2090241	A1	8/2009
EP	2090244	B1	8/2009
EP	2090245	A1	8/2009
EP	2090254	A1	8/2009
EP	2090256	A2	8/2009
EP	2093170	A2	9/2009
EP	2095777	A2	9/2009
EP	2110082	A1	10/2009
EP	2110084	A2	10/2009
EP	2111803	A2	10/2009
EP	1762190	B8	11/2009
EP	1813208	B1	11/2009
EP	1908426	B1	11/2009
EP	2116195	A1	11/2009
EP	2116197	A2	11/2009
EP	1607050	B1	12/2009
EP	1815804	B1	12/2009
EP	1875870	B1	12/2009
EP	1878395	B1	1/2010
EP	2151204	A1	2/2010
EP	1813211	B1	3/2010
EP	2165656	A2	3/2010
EP	2165660	A2	3/2010
EP	2165664	A2	3/2010

(56) **References Cited**

FOREIGN PATENT DOCUMENTS

EP	1566150	B1	4/2010
EP	1813206	B1	4/2010
EP	2184014	A2	5/2010
EP	1769754	B1	6/2010
EP	1854416	B1	6/2010
EP	1911408	B1	6/2010
EP	2198787	A1	6/2010
EP	2214610	A1	8/2010
EP	2218409	A1	8/2010
EP	1647286	B1	9/2010
EP	1825821	B1	9/2010
EP	1535565	B1	10/2010
EP	1702570	B1	10/2010
EP	1785098	B1	10/2010
EP	2005896	B1	10/2010
EP	2030578	B1	11/2010
EP	2036505	B1	11/2010
EP	2245993	A2	11/2010
EP	2245994	A1	11/2010
EP	2253280	A1	11/2010
EP	1627605	B1	12/2010
EP	2027811	B1	12/2010
EP	2130498	B1	12/2010
EP	2258282	A2	12/2010
EP	2263568	A2	12/2010
EP	1994890	B1	1/2011
EP	2005900	B1	1/2011
EP	2277667	A1	1/2011
EP	2283780	A2	2/2011
EP	2286738	A2	2/2011
EP	1494595	B1	3/2011
EP	1690502	B1	3/2011
EP	1884201	B1	3/2011
EP	2292153	A1	3/2011
EP	1769755	B1	4/2011
EP	2090240	B1	4/2011
EP	2303388	A1	4/2011
EP	2305135	A1	4/2011
EP	2314254	A2	4/2011
EP	2316345	A1	5/2011
EP	2316366	A2	5/2011
EP	2319443	A1	5/2011
EP	2324776	A2	5/2011
EP	1813205	B1	6/2011
EP	2042107	B1	6/2011
EP	2090243	B1	6/2011
EP	2329773	A1	6/2011
EP	2090239	B1	7/2011
EP	2340771	A2	7/2011
EP	2353545	A1	8/2011
EP	2361562	A1	8/2011
EP	2377472	A1	10/2011
EP	1836986	B1	11/2011
EP	1903414	B1	11/2011
EP	2153781	B1	11/2011
EP	2389928	A2	11/2011
EP	1847225	B1	12/2011
EP	2397079	A1	12/2011
EP	2399538	A2	12/2011
EP	1785102	B1	1/2012
EP	1316290	B1	2/2012
EP	2415416	A1	2/2012
EP	2090253	B1	3/2012
EP	2430986	A2	3/2012
EP	1347638	B1	5/2012
EP	1943956	B1	5/2012
EP	2446834	A1	5/2012
EP	2455007	A2	5/2012
EP	2457519	A1	5/2012
EP	2462878	A1	6/2012
EP	2462880	A2	6/2012
EP	1813204	B1	7/2012
EP	2189121	B1	7/2012
EP	2248475	B1	7/2012
EP	2005895	B1	8/2012
EP	2090248	B1	8/2012
EP	2481359	A1	8/2012
EP	2486860	A2	8/2012
EP	2486862	A2	8/2012
EP	1903412	B1	9/2012
EP	1935351	B1	9/2012
EP	2497431	A1	9/2012
EP	1550412	B2	10/2012
EP	1616549	B1	10/2012
EP	2030579	B1	10/2012
EP	2090252	B1	10/2012
EP	2517637	A1	10/2012
EP	2517638	A1	10/2012
EP	2517642	A2	10/2012
EP	2517645	A2	10/2012
EP	2517649	A2	10/2012
EP	2517651	A2	10/2012
EP	2526877	A1	11/2012
EP	2526883	A1	11/2012
EP	2396594	T3	2/2013
EP	1884206	B1	3/2013
EP	2090238	B1	4/2013
EP	2586380	A1	5/2013
EP	2586383	A2	5/2013
EP	2606812	A1	6/2013
EP	2606834	A2	6/2013
EP	1982657	B1	7/2013
EP	2614782	A2	7/2013
EP	2090234	B1	9/2013
EP	2633830	A1	9/2013
EP	2644124	A1	10/2013
EP	2644209	A2	10/2013
EP	2649948	A1	10/2013
EP	2649949	A1	10/2013
EP	1997438	B1	11/2013
EP	2684529	A2	1/2014
EP	2700367	A1	2/2014
EP	2713902	A1	4/2014
EP	1772105	B1	5/2014
EP	2759267	A2	7/2014
EP	2764826	A1	8/2014
EP	2764827	A2	8/2014
EP	2772206	A2	9/2014
EP	2772209	A1	9/2014
EP	2777520	A1	9/2014
EP	2777528	A2	9/2014
EP	2777537	A1	9/2014
EP	2777538	A2	9/2014
EP	2786714	A2	10/2014
EP	2803324	A2	11/2014
EP	2446835	B1	1/2015
EP	2845545	A1	3/2015
EP	1943960	B1	4/2015
EP	2090255	B1	4/2015
EP	2923660	A2	9/2015
EP	1774914	B1	12/2015
EP	2090235	B1	4/2016
EP	2823773	B1	4/2016
EP	2131750	B1	5/2016
EP	2510891	B1	6/2016
EP	1915957	B1	8/2016
EP	2586379	B1	8/2016
EP	2777533	B1	10/2016
EP	2364651	B1	11/2016
EP	2116192	B1	3/2017
EP	2311386	B1	6/2017
EP	2839787	B1	6/2017
FR	459743	A	11/1913
FR	999646	A	2/1952
FR	1112936	A	3/1956
FR	2598905	A1	11/1987
FR	2689749	B1	7/1994
FR	2765794	A1	1/1999
FR	2815842	A1	10/2000
GB	939929	A	10/1963
GB	1210522	A	10/1970
GB	1217159	A	12/1970
GB	1339394	A	12/1973
GB	2024012	A	1/1980

(56) **References Cited**

FOREIGN PATENT DOCUMENTS

GB	2109241	A	6/1983
GB	2272159	A	5/1994
GB	2284242	A	5/1995
GB	2286435	A	8/1995
GB	2336214	A	10/1999
GB	2425903	A	11/2006
GB	2423199	B	5/2009
GR	930100110	A	11/1993
JP	S 47-11908	Y1	5/1972
JP	S 50-33988	U	4/1975
JP	S 56-112235	A	9/1981
JP	S 58500053	A	1/1983
JP	S 58-501360	A	8/1983
JP	S 59-174920	A	3/1984
JP	S 60-100955	A	6/1985
JP	S 60-212152	A	10/1985
JP	S 61-98249	A	5/1986
JP	S 61502036	A	9/1986
JP	S 62-170011	U	10/1987
JP	S 63-59764	A	3/1988
JP	S 63-147449	A	6/1988
JP	S 63-203149	A	8/1988
JP	H 02-279149	A	11/1990
JP	H 03-12126	A	1/1991
JP	H 03-18354	A	1/1991
JP	H 03-78514	U	8/1991
JP	H 03-85009	U	8/1991
JP	H 04-215747	A	8/1992
JP	H 04-131860	U	12/1992
JP	H 05-84252	A	4/1993
JP	H 05-123325	A	5/1993
JP	H 06-30945	A	2/1994
JP	H 06-54857	A	3/1994
JP	H 06-63054	A	3/1994
JP	H 06-26812	U	4/1994
JP	H 06-121798	A	5/1994
JP	H 06-125913	A	5/1994
JP	H 06-197901	A	7/1994
JP	H 06-237937	A	8/1994
JP	H 06-327684	A	11/1994
JP	H 07-9622	U	2/1995
JP	H 07-31623	A	2/1995
JP	H 07-47070	A	2/1995
JP	H 07-51273	A	2/1995
JP	H 07-124166	A	5/1995
JP	H 07-163573	A	6/1995
JP	H 07-163574	A	6/1995
JP	H 07-171163	A	7/1995
JP	H 07-255735	A	10/1995
JP	H 07-285089	A	10/1995
JP	H 07-299074	A	11/1995
JP	H 08-33641	A	2/1996
JP	H 08-33642	A	2/1996
JP	H 08-164141	A	6/1996
JP	H 08-173437	A	7/1996
JP	H 08-182684	A	7/1996
JP	H 08-215201	A	8/1996
JP	H 08-507708	A	8/1996
JP	H 08-229050	A	9/1996
JP	H 08-289895	A	11/1996
JP	H 08-336540	A	12/1996
JP	H 08-336544	A	12/1996
JP	H 09-501081	A	2/1997
JP	H 09-501577	A	2/1997
JP	H 09-164144	A	6/1997
JP	H 10-113352	A	5/1998
JP	H 10-118090	A	5/1998
JP	H 10-296660	A	11/1998
JP	H 10-512465	A	12/1998
JP	H 10-512469	A	12/1998
JP	2000-014632	A	1/2000
JP	2000-033071	A	2/2000
JP	2000-112002	A	4/2000
JP	2000-166932	A	6/2000
JP	2000-171730	A	6/2000
JP	2000-287987	A	10/2000
JP	2000-325303	A	11/2000
JP	2001-037763	A	2/2001
JP	2001-046384	A	2/2001
JP	2001-087272	A	4/2001
JP	2001-514541	A	9/2001
JP	2001-276091	A	10/2001
JP	2001-286477	A	10/2001
JP	2001-517473	A	10/2001
JP	2002-051974	A	2/2002
JP	2002-085415	A	3/2002
JP	2002-143078	A	5/2002
JP	2002-204801	A	7/2002
JP	2002-528161	A	9/2002
JP	2002-314298	A	10/2002
JP	2002-369820	A	12/2002
JP	2002-542186	A	12/2002
JP	2003-000603	A	1/2003
JP	2003-500153	A	1/2003
JP	2003-504104	A	2/2003
JP	2003-135473	A	5/2003
JP	2003-148903	A	5/2003
JP	2003-164066	A	6/2003
JP	2003-521301	A	7/2003
JP	2003-521304	A	7/2003
JP	2003-523251	A	8/2003
JP	2003-523254	A	8/2003
JP	2003-524431	A	8/2003
JP	3442423	B2	9/2003
JP	2003-300416	A	10/2003
JP	2004-147701	A	5/2004
JP	2004-162035	A	6/2004
JP	2004-229976	A	8/2004
JP	2004-524076	A	8/2004
JP	2004-531280	A	10/2004
JP	2004-532084	A	10/2004
JP	2004-532676	A	10/2004
JP	2004-329624	A	11/2004
JP	2004-337617	A	12/2004
JP	2004-344662	A	12/2004
JP	2004-344663	A	12/2004
JP	2005-013573	A	1/2005
JP	2005-028147	A	2/2005
JP	2005-028148	A	2/2005
JP	2005-028149	A	2/2005
JP	2005-505309	A	2/2005
JP	2005-505322	A	2/2005
JP	2005-505334	A	2/2005
JP	2005-080702	A	3/2005
JP	2005-103280	A	4/2005
JP	2005-103281	A	4/2005
JP	2005-103293	A	4/2005
JP	2005-511131	A	4/2005
JP	2005-511137	A	4/2005
JP	2005-131163	A	5/2005
JP	2005-131164	A	5/2005
JP	2005-131173	A	5/2005
JP	2005-131211	A	5/2005
JP	2005-131212	A	5/2005
JP	2005-137423	A	6/2005
JP	2005-137919	A	6/2005
JP	2005-144183	A	6/2005
JP	2005-152416	A	6/2005
JP	2005-516714	A	6/2005
JP	2005-187954	A	7/2005
JP	2005-521109	A	7/2005
JP	2005-523105	A	8/2005
JP	2005-524474	A	8/2005
JP	4461008	B2	8/2005
JP	2005-296412	A	10/2005
JP	2005-529675	A	10/2005
JP	2005-529677	A	11/2005
JP	2005-328882	A	12/2005
JP	2005-335432	A	12/2005
JP	2005-342267	A	12/2005
JP	2006-034975	A	2/2006
JP	2006-034977	A	2/2006
JP	2006-034978	A	2/2006
JP	2006-034980	A	2/2006

(56) **References Cited**

FOREIGN PATENT DOCUMENTS

JP	2006-043451	A	2/2006
JP	2006-506106	A	2/2006
JP	2006-510879	A	3/2006
JP	3791856	B2	6/2006
JP	2006-187649	A	7/2006
JP	2006-218228		8/2006
JP	2006-218297	A	8/2006
JP	2006-223872	A	8/2006
JP	2006-281405	A	10/2006
JP	2006-289064	A	10/2006
JP	2006-334412	A	12/2006
JP	2006-334417	A	12/2006
JP	2006-346445	A	12/2006
JP	2007-000634	A	1/2007
JP	2007-050253	A	3/2007
JP	2007-061628	A	3/2007
JP	2007-083051	A	4/2007
JP	2007-098130	A	4/2007
JP	2007-105481	A	4/2007
JP	3906843	B2	4/2007
JP	2007-117725	A	5/2007
JP	2007-130471	A	5/2007
JP	2007-130479	A	5/2007
JP	2007-222615	A	6/2007
JP	3934161	B2	6/2007
JP	2007-203047	A	8/2007
JP	2007-203049	A	8/2007
JP	2007-203051	A	8/2007
JP	2007-203055	A	8/2007
JP	2007-203057	A	8/2007
JP	2007-524435	A	8/2007
JP	2007-229448	A	9/2007
JP	2007-526026	A	9/2007
JP	2007-252916	A	10/2007
JP	4001860	B2	10/2007
JP	2007-307373	A	11/2007
JP	2007-325922	A	12/2007
JP	2008-068073	A	3/2008
JP	2008-510515	A	4/2008
JP	2008-516669	A	5/2008
JP	2008-528203	A	7/2008
JP	2008-206967	A	9/2008
JP	2008-212637	A	9/2008
JP	2008-212638	A	9/2008
JP	2008-212640	A	9/2008
JP	2008-220956	A	9/2008
JP	2008-237881	A	10/2008
JP	2008-259860	A	10/2008
JP	2008-264535	A	11/2008
JP	2008-283459	A	11/2008
JP	2008-307393	A	12/2008
JP	2009-000531	A	1/2009
JP	2009-006137	A	1/2009
JP	2009-502351	A	1/2009
JP	2009-502352	A	1/2009
JP	2009-022742	A	2/2009
JP	2009-506799	A	2/2009
JP	2009-507526	A	2/2009
JP	2009-072595	A	4/2009
JP	2009-072599	A	4/2009
JP	2009-090113	A	4/2009
JP	2009-106752	A	5/2009
JP	2009-189821	A	8/2009
JP	2009-189823	A	8/2009
JP	2009-189836	A	8/2009
JP	2009-189837	A	8/2009
JP	2009-189838	A	8/2009
JP	2009-189846	A	8/2009
JP	2009-189847	A	8/2009
JP	2009-201998	A	9/2009
JP	2009-536082	A	10/2009
JP	2009-261944	A	11/2009
JP	2009-268908	A	11/2009
JP	2009-538684	A	11/2009
JP	2009-539420	A	11/2009
JP	2009-291604	A	12/2009
JP	2010-504808	A	2/2010
JP	2010-504809	A	2/2010
JP	2010-504813	A	2/2010
JP	2010-504846	A	2/2010
JP	2010-505524	A	2/2010
JP	2010-069307	A	4/2010
JP	2010-069310	A	4/2010
JP	2010-075694	A	4/2010
JP	2010-075695	A	4/2010
JP	2010-088876	A	4/2010
JP	2010-094514	A	4/2010
JP	2010-098844	A	4/2010
JP	2010-142636	A	7/2010
JP	2010-214166	A	9/2010
JP	4549018	B2	9/2010
JP	2010-240411	A	10/2010
JP	2010-246948	A	11/2010
JP	2010-279690	A	12/2010
JP	2010-540192	A	12/2010
JP	2011-005260	A	1/2011
JP	2011-504391	A	2/2011
JP	2011-509786	A	3/2011
JP	2011-072797	A	4/2011
JP	2011-078763	A	4/2011
JP	2011-524199	A	9/2011
JP	4783373	B2	9/2011
JP	2011-251156	A	12/2011
JP	2012-040398	A	3/2012
JP	2012-507356	A	3/2012
JP	2012-517289	A	8/2012
JP	5140421	B2	2/2013
JP	5162595	B2	3/2013
JP	2013-517891	A	5/2013
JP	2013-526342	A	6/2013
JP	2013-128791	A	7/2013
JP	5212039	B2	7/2013
JP	5333899	B2	11/2013
JP	6007357	B2	10/2016
KR	20110003229	A	1/2011
RU	2008830	C1	3/1994
RU	2052979	C1	1/1996
RU	2098025	C1	12/1997
RU	2141279	C1	11/1999
RU	2144791	C1	1/2000
RU	2181566	C2	4/2002
RU	2187249	C2	8/2002
RU	2189091	C2	9/2002
RU	32984	U1	10/2003
RU	2225170	C2	3/2004
RU	42750	U1	12/2004
RU	61114	U1	2/2007
RU	2007-103563	A	8/2008
SU	189517	A	1/1967
SU	328636	A	9/1972
SU	511939	A1	4/1976
SU	674747	A1	7/1979
SU	886900	A1	12/1981
SU	1009439	A	4/1983
SU	1022703	A1	6/1983
SU	1271497	A1	11/1986
SU	1333319	A2	8/1987
SU	1377053	A1	2/1988
SU	1443874	A1	12/1988
SU	1509051	A1	9/1989
SU	1561964	A1	5/1990
SU	1708312	A1	1/1992
SU	1722476	A1	3/1992
SU	1752361	A1	8/1992
SU	1814161	A1	5/1993
WO	WO 82/02824	A1	9/1982
WO	WO 86/02254	A1	4/1986
WO	WO 91/15157	A1	10/1991
WO	WO 92/20295	A1	11/1992
WO	WO 92/21300	A1	12/1992
WO	WO 93/08755	A1	5/1993
WO	WO 93/13718	A1	7/1993
WO	WO 93/14690	A1	8/1993
WO	WO 93/15648	A1	8/1993

(56) **References Cited**

FOREIGN PATENT DOCUMENTS

WO	WO 93/15850	A1	8/1993
WO	WO 93/19681	A1	10/1993
WO	WO 94/00060	A1	1/1994
WO	WO 94/11057	A1	5/1994
WO	WO 94/12108	A1	6/1994
WO	WO 94/17737	A1	8/1994
WO	WO 94/18893	A1	9/1994
WO	WO 94/20030	A1	9/1994
WO	WO 94/22378	A1	10/1994
WO	WO 94/23659	A1	10/1994
WO	WO 94/24943	A1	11/1994
WO	WO 94/24947	A1	11/1994
WO	WO 95/02369	A1	1/1995
WO	WO 95/03743	A1	2/1995
WO	WO 95/06817	A1	3/1995
WO	WO 95/09576	A1	4/1995
WO	WO 95/09577	A1	4/1995
WO	WO 95/14436	A1	6/1995
WO	WO 95/17855	A1	7/1995
WO	WO 95/18383	A1	7/1995
WO	WO 95/18572	A1	7/1995
WO	WO 95/19739	A1	7/1995
WO	WO 95/20360	A1	8/1995
WO	WO 95/23557	A1	9/1995
WO	WO 95/24865	A1	9/1995
WO	WO 95/25471	A3	9/1995
WO	WO 95/26562	A1	10/1995
WO	WO 95/29639	A1	11/1995
WO	WO 96/04858	A1	2/1996
WO	WO 96/18344	A2	6/1996
WO	WO 96/19151	A1	6/1996
WO	WO 96/19152	A1	6/1996
WO	WO 96/20652	A1	7/1996
WO	WO 96/21119	A1	7/1996
WO	WO 96/22055	A1	7/1996
WO	WO 96/23448	A1	8/1996
WO	WO 96/24301	A1	8/1996
WO	WO 96/27337	A1	9/1996
WO	WO 96/31155	A1	10/1996
WO	WO 96/35464	A1	11/1996
WO	WO 96/39085	A1	12/1996
WO	WO 96/39086	A1	12/1996
WO	WO 96/39087	A1	12/1996
WO	WO 96/39088	A1	12/1996
WO	WO 96/39089	A1	12/1996
WO	WO 97/00646	A1	1/1997
WO	WO 97/00647	A1	1/1997
WO	WO 97/01989	A1	1/1997
WO	WO 97/06582	A1	2/1997
WO	WO 97/10763	A1	3/1997
WO	WO 97/10764	A1	3/1997
WO	WO 97/11648	A2	4/1997
WO	WO 97/11649	A1	4/1997
WO	WO 97/15237	A1	5/1997
WO	WO 97/24073	A1	7/1997
WO	WO 97/24993	A1	7/1997
WO	WO 97/30644	A1	8/1997
WO	WO 97/30659	A1	8/1997
WO	WO 97/34533	A1	9/1997
WO	WO 97/37598	A1	10/1997
WO	WO 97/39688	A2	10/1997
WO	WO 97/41767	A2	11/1997
WO	WO 98/01080	A1	1/1998
WO	WO 98/17180	A1	4/1998
WO	WO 98/22154	A2	5/1998
WO	WO 98/27880	A1	7/1998
WO	WO 98/30153	A1	7/1998
WO	WO 98/47436	A1	10/1998
WO	WO 98/58589	A1	12/1998
WO	WO 99/02090	A1	1/1999
WO	WO 99/03407	A1	1/1999
WO	WO 99/03408	A1	1/1999
WO	WO 99/03409	A1	1/1999
WO	WO 99/12483	A1	3/1999
WO	WO 99/12487	A1	3/1999
WO	WO 99/12488	A1	3/1999
WO	WO 99/15086	A1	4/1999
WO	WO 99/15091	A1	4/1999
WO	WO 99/23933	A2	5/1999
WO	WO 99/23959	A1	5/1999
WO	WO 99/25261	A1	5/1999
WO	WO 99/29244	A1	6/1999
WO	WO 99/34744	A1	7/1999
WO	WO 99/45849	A1	9/1999
WO	WO 99/48430	A1	9/1999
WO	WO 99/51158	A1	10/1999
WO	WO 00/24322	A1	5/2000
WO	WO 00/24330	A1	5/2000
WO	WO 00/33755	A1	6/2000
WO	WO 00/41638	A1	7/2000
WO	WO 00/48506	A1	8/2000
WO	WO 00/53112	A2	9/2000
WO	WO 00/54653	A1	9/2000
WO	WO 00/057796	A1	10/2000
WO	WO 00/64365	A1	11/2000
WO	WO 00/72762	A1	12/2000
WO	WO 00/72765	A1	12/2000
WO	WO 00/78222	A1	12/2000
WO	WO 01/03587	A1	1/2001
WO	WO 01/05702	A1	1/2001
WO	WO 01/010482	A1	2/2001
WO	WO 01/35845	A1	5/2001
WO	WO 01/54594	A1	8/2001
WO	WO 01/58371	A1	8/2001
WO	WO 01/62158	A2	8/2001
WO	WO 01/62161	A1	8/2001
WO	WO 01/62162	A1	8/2001
WO	WO 01/62163	A1	8/2001
WO	WO 01/62164	A2	8/2001
WO	WO 01/62169	A2	8/2001
WO	WO 01/78605	A2	10/2001
WO	WO 01/80757	A2	11/2001
WO	WO 01/91646	A1	12/2001
WO	WO 02/00121	A1	1/2002
WO	WO 02/07608	A2	1/2002
WO	WO 02/07618	A1	1/2002
WO	WO 02/17799	A1	3/2002
WO	WO 02/19920	A1	3/2002
WO	WO 02/19932	A1	3/2002
WO	WO 02/26143	A1	4/2002
WO	WO 02/30297	A2	4/2002
WO	WO 02/32322	A2	4/2002
WO	WO 02/36028	A1	5/2002
WO	WO 02/43571	A2	6/2002
WO	WO 02/058568	A1	8/2002
WO	WO 02/060328	A1	8/2002
WO	WO 02/065933	A2	8/2002
WO	WO 02/067785	A2	9/2002
WO	WO 02/080781	A2	10/2002
WO	WO 02/085218	A2	10/2002
WO	WO 02/087586	A1	11/2002
WO	WO 02/098302	A1	12/2002
WO	WO 03/000138	A2	1/2003
WO	WO 03/001329	A2	1/2003
WO	WO 03/001986	A2	1/2003
WO	WO 03/013363	A1	2/2003
WO	WO 03/013372	A2	2/2003
WO	WO 03/015604	A2	2/2003
WO	WO 03/020106	A2	3/2003
WO	WO 03/020139	A2	3/2003
WO	WO 03/024339	A1	3/2003
WO	WO 2003/079909	A3	3/2003
WO	WO 03/030743	A2	4/2003
WO	WO 03/037193	A1	5/2003
WO	WO 2003/047436	A3	6/2003
WO	WO 03/055402	A1	7/2003
WO	WO 03/057048	A1	7/2003
WO	WO 03/057058	A1	7/2003
WO	WO 2003/063694	A1	8/2003
WO	WO 03/077769	A1	9/2003
WO	WO 03/079911	A1	10/2003
WO	WO 03/082126	A1	10/2003
WO	WO 03/086206	A1	10/2003
WO	WO 03/088845	A2	10/2003

(56) **References Cited**

FOREIGN PATENT DOCUMENTS

WO	WO 03/090630	A2	11/2003
WO	WO 03/094743	A1	11/2003
WO	WO 03/094745	A1	11/2003
WO	WO 2003/094746	A1	11/2003
WO	WO 2003/094747	A1	11/2003
WO	WO 03/101313	A1	12/2003
WO	WO 03/105698	A2	12/2003
WO	WO 03/105702	A2	12/2003
WO	WO 2004/004578	A1	1/2004
WO	WO 2004/006980	A2	1/2004
WO	WO 2004/011037	A2	2/2004
WO	WO 2004/014238	A2	2/2004
WO	WO 2004/019769	A1	3/2004
WO	WO 2004/019803	A1	3/2004
WO	WO 2004/021868	A2	3/2004
WO	WO 2004/028585	A2	4/2004
WO	WO 2004/030554	A1	4/2004
WO	WO 2004/032754	A2	4/2004
WO	WO 2004/032760	A2	4/2004
WO	WO 2004/032762	A1	4/2004
WO	WO 2004/032763	A2	4/2004
WO	WO 2004/032783	A1	4/2004
WO	WO 2004/034875	A2	4/2004
WO	WO 2004/047626	A1	6/2004
WO	WO 2004/047653	A2	6/2004
WO	WO 2004/049956	A2	6/2004
WO	WO 2004/050971	A2	6/2004
WO	WO 2004/052426	A2	6/2004
WO	WO 2004/056276	A1	7/2004
WO	WO 2004/056277	A1	7/2004
WO	WO 2004/062516	A1	7/2004
WO	WO 2004/064600	A2	8/2004
WO	WO 2004/078050	A2	9/2004
WO	WO 2004/078051	A2	9/2004
WO	WO 2004/078236	A2	9/2004
WO	WO 2004/086987	A1	10/2004
WO	WO 2004/096015	A2	11/2004
WO	WO 2004/096057	A2	11/2004
WO	WO 2004/103157	A2	12/2004
WO	WO 2004/105593	A1	12/2004
WO	WO 2004/105621	A1	12/2004
WO	WO 2004/112618	A2	12/2004
WO	WO 2004/112652	A2	12/2004
WO	WO 2005/027983	A2	3/2005
WO	WO 2005/037329	A2	4/2005
WO	WO 2005/042041	A1	5/2005
WO	WO 2005/044078	A2	5/2005
WO	WO 2005/048809	A1	6/2005
WO	WO 2005/055846	A1	6/2005
WO	WO 2005/072634	A2	8/2005
WO	WO 2005/078892	A1	8/2005
WO	WO 2005/079675	A2	9/2005
WO	WO 2005/087128	A1	9/2005
WO	WO 2005/096954	A2	10/2005
WO	WO 2005/110243	A2	11/2005
WO	WO 2005/112806	A2	12/2005
WO	WO 2005/112808	A1	12/2005
WO	WO 2005/115251	A1	12/2005
WO	WO 2005/115253	A2	12/2005
WO	WO 2005/117735	A1	12/2005
WO	WO 2005/122936	A1	12/2005
WO	WO 2006/023486	A1	3/2006
WO	WO 2006/023578	A2	3/2006
WO	WO 2006/027014	A1	3/2006
WO	WO 2006/028314	A1	3/2006
WO	WO 2006/044490	A2	4/2006
WO	WO 2006/044581	A2	4/2006
WO	WO 2006/044810	A2	4/2006
WO	WO 2006/049852	A2	5/2006
WO	WO 2006/050360	A1	5/2006
WO	WO 2006/051252	A1	5/2006
WO	WO 2006/059067	A1	6/2006
WO	WO 2006/073581	A2	7/2006
WO	WO 2006/083748	A1	8/2006
WO	WO 2006/085389	A1	8/2006
WO	WO 2006/092563	A1	9/2006
WO	WO 2006/092565	A1	9/2006
WO	WO 2006/115958	A1	11/2006
WO	WO 2006/125940	A1	11/2006
WO	WO 2006/132992	A2	12/2006
WO	WO 2007/002180	A2	1/2007
WO	WO 2007/016290	A2	2/2007
WO	WO 2007/018898	A2	2/2007
WO	WO 2007/034161	A2	3/2007
WO	WO 2007/051000	A2	5/2007
WO	WO 2007/059233	A2	5/2007
WO	WO 2007/074430	A1	7/2007
WO	WO 2007/089603	A2	8/2007
WO	WO 2007/098220	A2	8/2007
WO	WO 2007/121579	A1	11/2007
WO	WO 2007/129121	A1	11/2007
WO	WO 2007/131110	A2	11/2007
WO	WO 2007/137304	A2	11/2007
WO	WO 2007/139734	A2	12/2007
WO	WO 2007/142625	A2	12/2007
WO	WO 2007/145825	A2	12/2007
WO	WO 2007/146987	A2	12/2007
WO	WO 2007/147439	A1	12/2007
WO	WO 2008/020964	A2	2/2008
WO	WO 2008/021687	A1	2/2008
WO	WO 2008/021969	A2	2/2008
WO	WO 2008/027972	A1	3/2008
WO	WO 2008/039237	A1	4/2008
WO	WO 2008/039249	A1	4/2008
WO	WO 2008/039270	A1	4/2008
WO	WO 2008/045383	A2	4/2008
WO	WO 2008/057281	A2	5/2008
WO	WO 2008/070763	A1	6/2008
WO	WO 2008/080148	A2	7/2008
WO	WO 2008/089404	A2	7/2008
WO	WO 2008/101080	A1	8/2008
WO	WO 2008/101228	A2	8/2008
WO	WO 2008/103797	A2	8/2008
WO	WO 2008/109123	A2	9/2008
WO	WO 2008/109125	A1	9/2008
WO	WO 2008/112912	A2	9/2008
WO	WO 2008/118728	A1	10/2008
WO	WO 2008/118928	A2	10/2008
WO	WO 2008/124748	A1	10/2008
WO	WO 2008/131357	A1	10/2008
WO	WO 2009/005969	A2	1/2009
WO	WO 2009/022614	A1	2/2009
WO	WO 2009/023851	A1	2/2009
WO	WO 2009/033057	A2	3/2009
WO	WO 2009/039506	A1	3/2009
WO	WO 2009/046394	A1	4/2009
WO	WO 2009/066105	A1	5/2009
WO	WO 2009/067649	A2	5/2009
WO	WO 2009/091497	A2	7/2009
WO	WO 2009/120944	A2	10/2009
WO	WO 2009/137761	A2	11/2009
WO	WO 2009/143092	A1	11/2009
WO	WO 2009/143331	A1	11/2009
WO	WO 2009/150650	A2	12/2009
WO	WO 2009/152307	A1	12/2009
WO	WO 2010/028332	A2	3/2010
WO	WO 2010/030434	A1	3/2010
WO	WO 2010/045425	A1	4/2010
WO	WO 2010/050771	A2	5/2010
WO	WO 2010/054404	A1	5/2010
WO	WO 2010/056714	A1	5/2010
WO	WO 2010/063795	A1	6/2010
WO	WO 2010/090940	A1	8/2010
WO	WO 2010/093333	A1	8/2010
WO	WO 2010/098871	A2	9/2010
WO	WO 2011/008672	A2	1/2011
WO	WO 2011/013103	A1	2/2011
WO	WO 2011/044343	A2	4/2011
WO	WO 2011/060311	A2	5/2011
WO	WO 2011/084969	A1	7/2011
WO	WO 2011/127137	A1	10/2011
WO	WO 2012/006306	A2	1/2012
WO	WO 2012/009431	A2	1/2012
WO	WO 2012/021671	A1	2/2012

(56) **References Cited**

FOREIGN PATENT DOCUMENTS

WO	WO 2012/040438	A1	3/2012
WO	WO 2012/044551	A1	4/2012
WO	WO 2012/044554	A1	4/2012
WO	WO 2012/044597	A1	4/2012
WO	WO 2012/044606	A2	4/2012
WO	WO 2012/044820	A1	4/2012
WO	WO 2012/044844	A2	4/2012
WO	WO 2012/044853	A1	4/2012
WO	WO 2012/044854	A1	4/2012
WO	WO 2012/058213	A2	5/2012
WO	WO 2012/068156	A2	5/2012
WO	WO 2012/109760	A1	8/2012
WO	WO 2012/127462	A1	9/2012
WO	WO 2012/135705	A1	10/2012
WO	WO 2012/143913	A2	10/2012
WO	WO 2012/148667	A2	11/2012
WO	WO 2012/148668	A2	11/2012
WO	WO 2012/148703	A2	11/2012
WO	WO 2012/160163	A1	11/2012
WO	WO 2012/166503	A1	12/2012
WO	WO 2013/009252	A2	1/2013
WO	WO 2013/009699	A2	1/2013
WO	WO 2013/023114	A1	2/2013
WO	WO 2013/036409	A1	3/2013
WO	WO 2013/043707	A2	3/2013
WO	WO 2013/043717	A1	3/2013
WO	WO 2013/043721	A2	3/2013
WO	WO 2013/062978	A2	5/2013
WO	WO 2013/116869	A1	8/2013
WO	WO 2013/148762	A2	10/2013
WO	WO 2013/167427	A1	11/2013
WO	WO 2013/188130	A1	12/2013
WO	WO 2014/004199	A1	1/2014
WO	WO 2014/004294	A2	1/2014
WO	WO 2015/153642	A1	10/2015
WO	WO 2007/014355	A2	2/2017

OTHER PUBLICATIONS

Disclosed Anonymously, "Motor-Driven Surgical Stapler Improvements," Research Disclosure Database No. 526041, Published: Feb. 2008.
C.C. Thompson et al., "Peroral Endoscopic Reduction of Dilated Gastrojejunal Anastomosis After Roux-en-Y Gastric Bypass: A Possible New Option for Patients with Weight Regain," Surg Endosc (2006) vol. 20, pp. 1744-1748.
B.R. Coolman, DVM, MS et al., "Comparison of Skin Staples With Sutures for Anastomosis of the Small Intestine in Dogs," Abstract; http://www.blackwell-synergy.com/doi/abs/10.1053/jvet.2000.7539?cookieSet=1&journalCode=vsu which redirects to http://www3.interscience.wiley.com/journal/119040681/abstract?CRETRY=1&SRETRY=0; [online] accessed: Sep. 22, 2008 (2 pages).
The Sodem Aseptic Battery Transfer Kit, Sodem Systems, (2000), 3 pages.
"Biomedical Coatings," Fort Wayne Metals, Research Products Corporation, obtained online at www.fwmetals.com on Jun. 21, 2010 (1 page).
Van Meer et al., "A Disposable Plastic Compact Wrist for Smart Minimally Invasive Surgical Tools," LAAS/CNRS (Aug. 2005).
Breedveld et al., "A New, Easily Miniaturized Sterrable Endoscope," IEEE Engineering in Medicine and Biology Magazine (Nov./Dec. 2005).
D. Tuite, Ed., "Get the Lowdown on Ultracapacitors," Nov. 15, 2007; [online] URL: http://electronicdesign.com/Articles/Print.cfm?ArticleID=17465, accessed Jan. 15, 2008 (5 pages).
Datasheet for Panasonic TK Relays Ultra Low Profile 2 A Polarized Relay, Copyright Matsushita Electric Works, Ltd. (Known of at least as early as Aug. 17, 2010), 5 pages.
ASTM procedure D2240-00, "Standard Test Method for Rubber Property-Durometer Hardness," (Published Aug. 2000).
ASTM procedure D2240-05, "Standard Test Method for Rubber Property-Durometer Hardness," (Published Apr. 2010).
Covidien Brochure, "Endo GIA™ Reloads with Tri-Staple™ Technology," (2010), 1 page.
Covidien Brochure, "Endo GIA™ Reloads with Tri-Staple™ Technology and Endo GIA™ Ultra Universal Staplers," (2010), 2 pages.
Covidien Brochure, "Endo GIA™ Black Reload with Tri-Staple™ Technology," (2012), 2 pages.
Covidien Brochure, "Endo GIA™ Curved Tip Reload with Tri-Staple™ Technology," (2012), 2 pages.
Covidien Brochure, "Endo GIA™ Reloads with Tri-Staple™ Technology," (2010), 2 pages.
Covidien Brochure, "Endo GIA™ Ultra Universal Stapler," (2010), 2 pages.
Miyata et al., "Biomolecule-Sensitive Hydrogels," Advanced Drug Delivery Reviews, 54 (2002) pp. 79-98.
Jeong et al., "Thermosensitive Sol-Gel Reversible Hydrogels," Advanced Drug Delivery Reviews, 54 (2002) pp. 37-51.
Byrne et al., "Molecular Imprinting Within Hydrogels," Advanced Drug Delivery Reviews, 54 (2002) pp. 149-161.
Qiu et al., "Environment-Sensitive Hydrogels for Drug Delivery," Advanced Drug Delivery Reviews, 53 (2001) pp. 321-339.
Hoffman, "Hydrogels for Biomedical Applications," Advanced Drug Delivery Reviews, 43 (2002) pp. 3-12.
Hoffman, "Hydrogels for Biomedical Applications," Advanced Drug Delivery Reviews, 54 (2002) pp. 3-12.
Peppas, "Physiologically Responsive Hydrogels," Journal of Bioactive and Compatible Polymers, vol. 6 (Jul. 1991) pp. 241-246.
Ebara, "Carbohydrate-Derived Hydrogels and Microgels," Engineered Carbohydrate-Based Materials for Biomedical Applications: Polymers, Surfaes, Dendrimers. Nanoparticles, and Hydrogels, Edited by Ravin Narain, 2011, pp. 337-345.
Pappas, Editor "Hydrogels in Medicine and Pharmacy," vol. I, Fundamentals, CRC Press, 1986.
Matsuda, "Thermodynamics of Formation of Porous Polymeric Membrane from Solutions," Polymer Journal, vol. 23, No. 5, pp. 435-444 (1991).
Young, "Microcellular foams via phase separation," Journal of Vacuum Science & Technology A 4(3), (May/Jun. 1986).
Chen et al., "Elastomeric Biomaterials for Tissue Engineering," Progress in Polymer Science 38 (2013), pp. 584-671.
Pitt et al., "Attachment of Hyaluronan to Metallic Surfaces," J. Biomed. Mater. Res. 68A: pp. 95-106. 2004.
Schellhammer et al., "Poly-Lactic-Acid for Coating of Endovascular Stents: Preliminary Results in Canine Experimental Av-Fistulae," Mat.-wiss. u. Werkstofftech., 32, pp. 193-199 (2001).
Solorio et al., "Gelatin Microspheres Crosslinked with Genipin for Local Delivery of Growth Factors," J. Tissue Eng. Regen. Med. (2010), 4(7): pp. 514-523.
http://ninpgan.net/publications/51-100/89.pdf; 2004, Ning Pan, On Uniqueness of Fibrous Materials, Design & Nature II. Eds: Colins, M. and Brebbia, C. WIT Press, Boston, 493-504.
Covidien iDrive™ Ultra in Service Reference Card, "iDrive™ Ultra Powered Stapling Device," (4 pages).
Covidien iDrive™ Ultra Powered Stapling System ibrochure, "The Power of iDrive™ Ultra Powered Stapling System and Tri-Staple™ Technology," (23 pages).
Seils et al., Covidien Summary: Clinical Study "UCONN Biodynamics: Final Report on Results," (2 pages).
Covidien "iDrive™ Ultra Powered Stapling System, A Guide for Surgeons," (6 pages).
Covidien "iDrive™ Ultra Powered Stapling System, Cleaning and Sterilization Guide," (2 pages).
Covidien brochure "iDrive™ Ultra Powered Stapling System," (6 pages).
"Indian Standard: Automotive Vehicles—Brakes and Braking Systems (IS 11852-1:2001)", Mar. 1, 2001.
Fast, Versatile Blackfin Processors Handle Advanced RFID Reader Applications; Analog Dialogue: vol. 40—Sep. 2006; http://www.analog.com/library/analogDialogue/archives/40-09/rfid.pdf; Wayback Machine to Feb. 15, 2012.

(56) **References Cited**

OTHER PUBLICATIONS

Serial Communication Protocol; Michael Lemmon Feb. 1, 2009; http:/www3.nd.edu/~lemmon/courses/ee224/web-manual/web-manual/lab12/node2.html; Wayback Machine to Apr. 29, 2012.
Allegro MicroSystems, LLC, Automotive Full Bridge MOSFET Driver, A3941-DS, Rev. 5, 21 pages, http://www.allegromicro.com/~/media/Files/Datasheets/A3941-Datasheet.ashx?la=en.
Patrick J. Sweeney: "RFID for Dummies", Mar. 11, 2010, pp. 365-365, XP055150775, ISBN: 978-1-11-805447-5, Retrieved from the Internet: URL: books.google.de/books?isbn=1118054474 [retrieved on Nov. 4, 2014]— book not attached.
Data Sheet of LM4F230H5QR, 2007.
U.S. Appl. No. 12/031,573, filed Feb. 14, 2008.

* cited by examiner

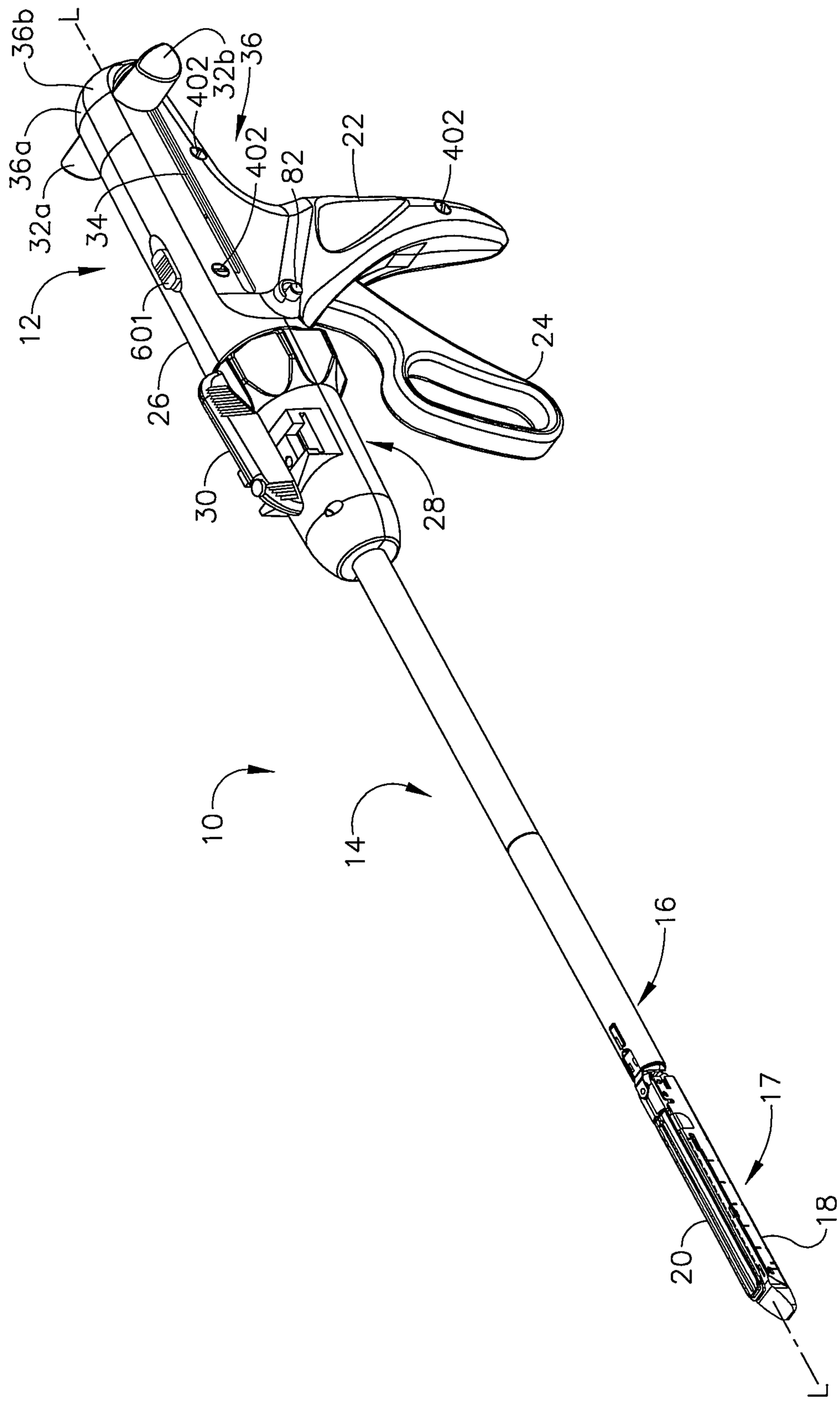
36b
L
36
32b
402
402
36a
32a
34
82
22
402
12
601
26
24
30
28
10
14
16
17
18
20
L

FIG. 1

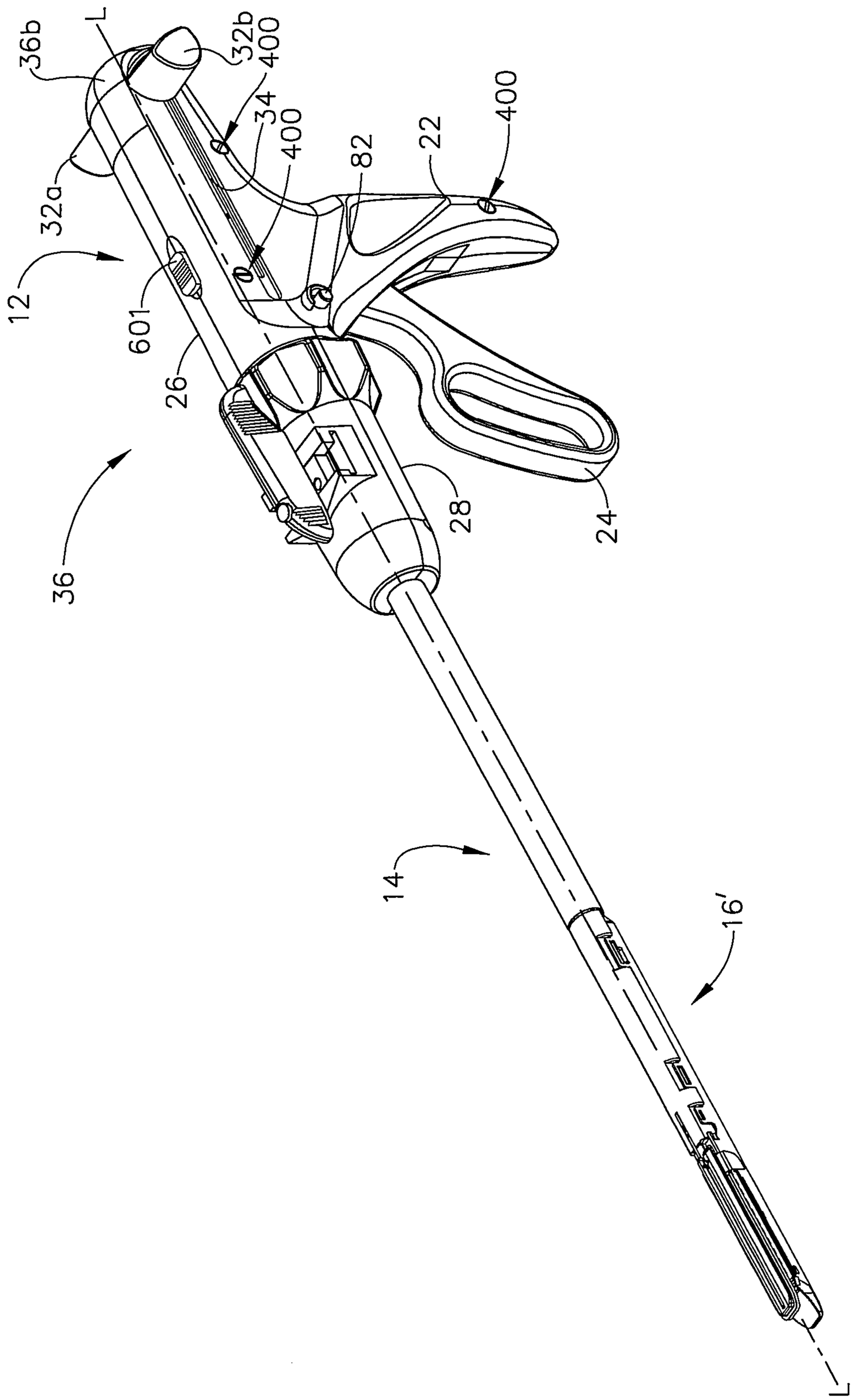

FIG. 2

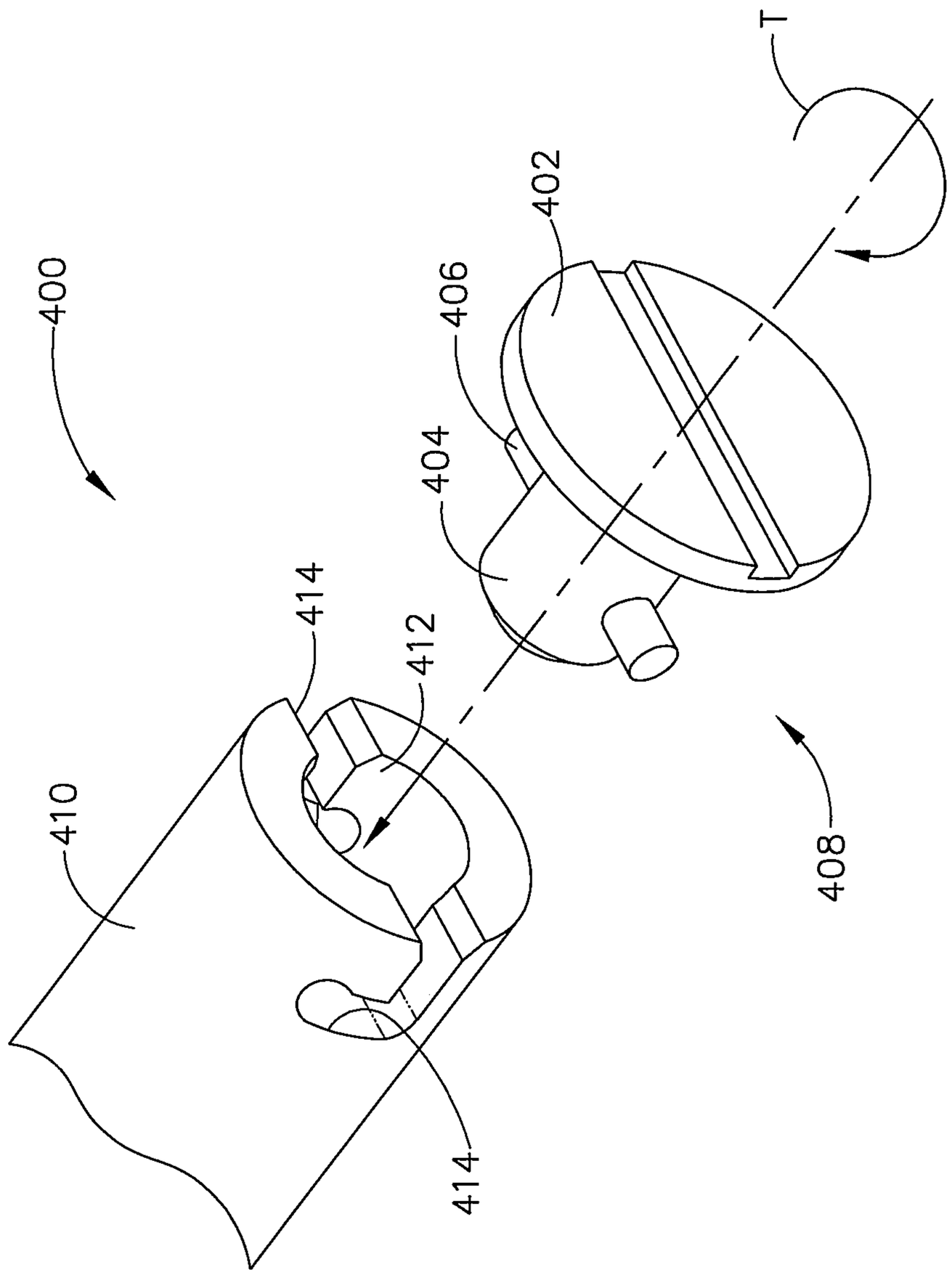

FIG. 3

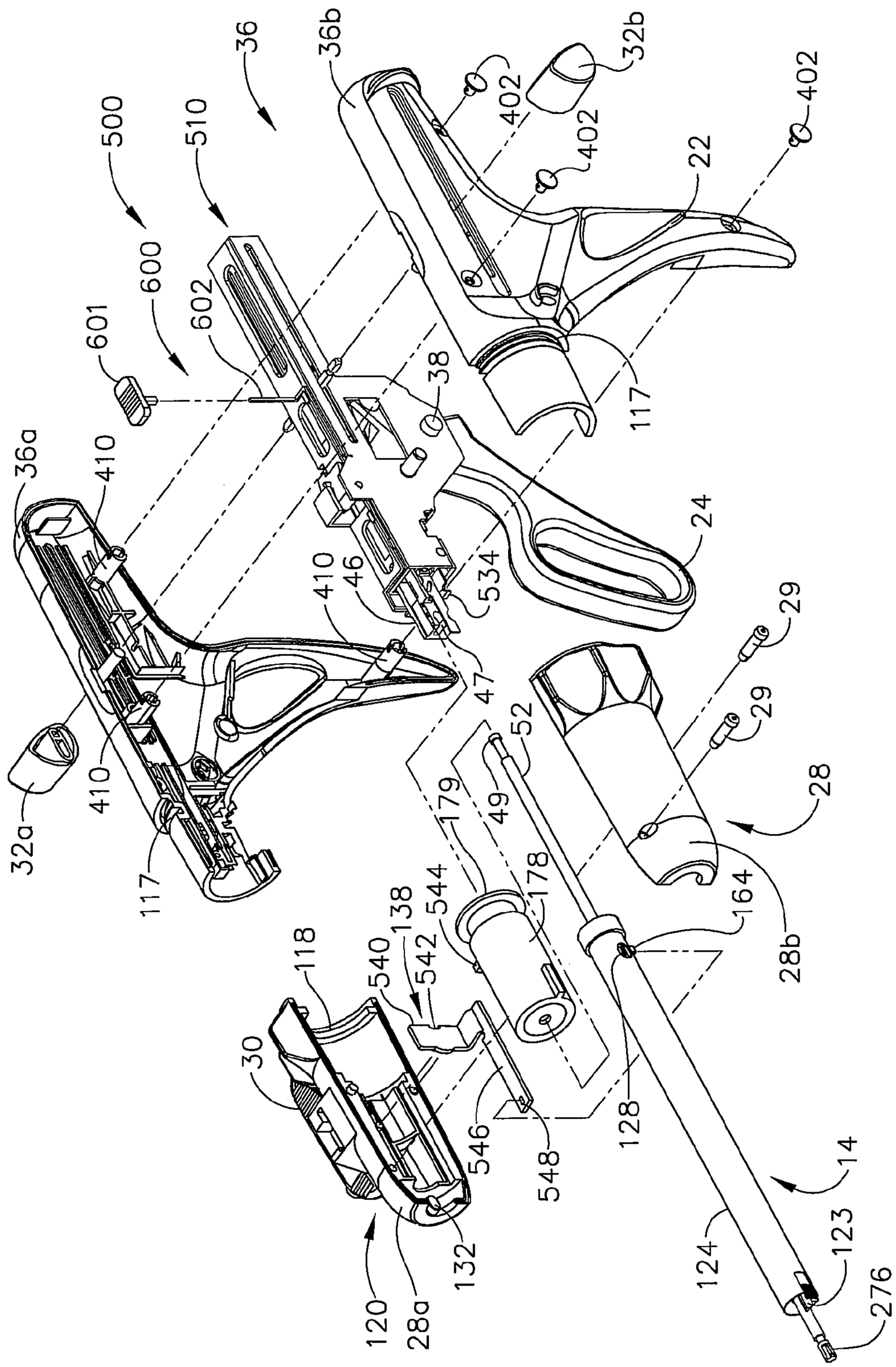
500
510
36
36b
32b
402
402
402
22
600
601
602
38
117
36a
410
24
410
46
534
29
29
47
52
410
32a
117
179
49
28
544
178
164
138
28b
118
540
542
30
546
548
128
14
120
28a
132
124
123
276

FIG. 4

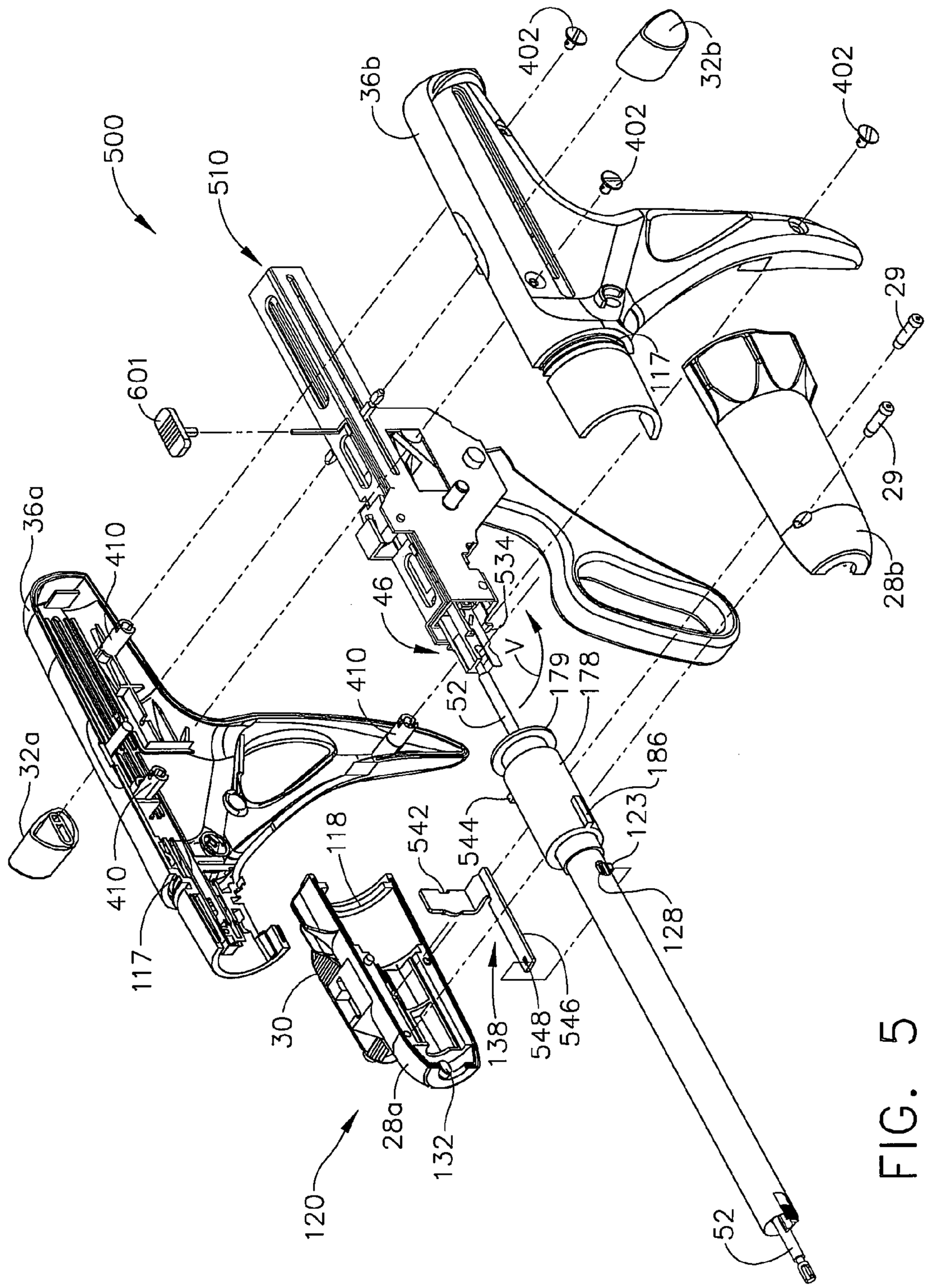
500
510
601
36b
402
32b
402
402
29
29
28b
117
36a
410
46
534
V
179
178
52
410
186
123
128
32a
410
117
118
542
544
546
548
138
30
28a
132
120
52

FIG. 5

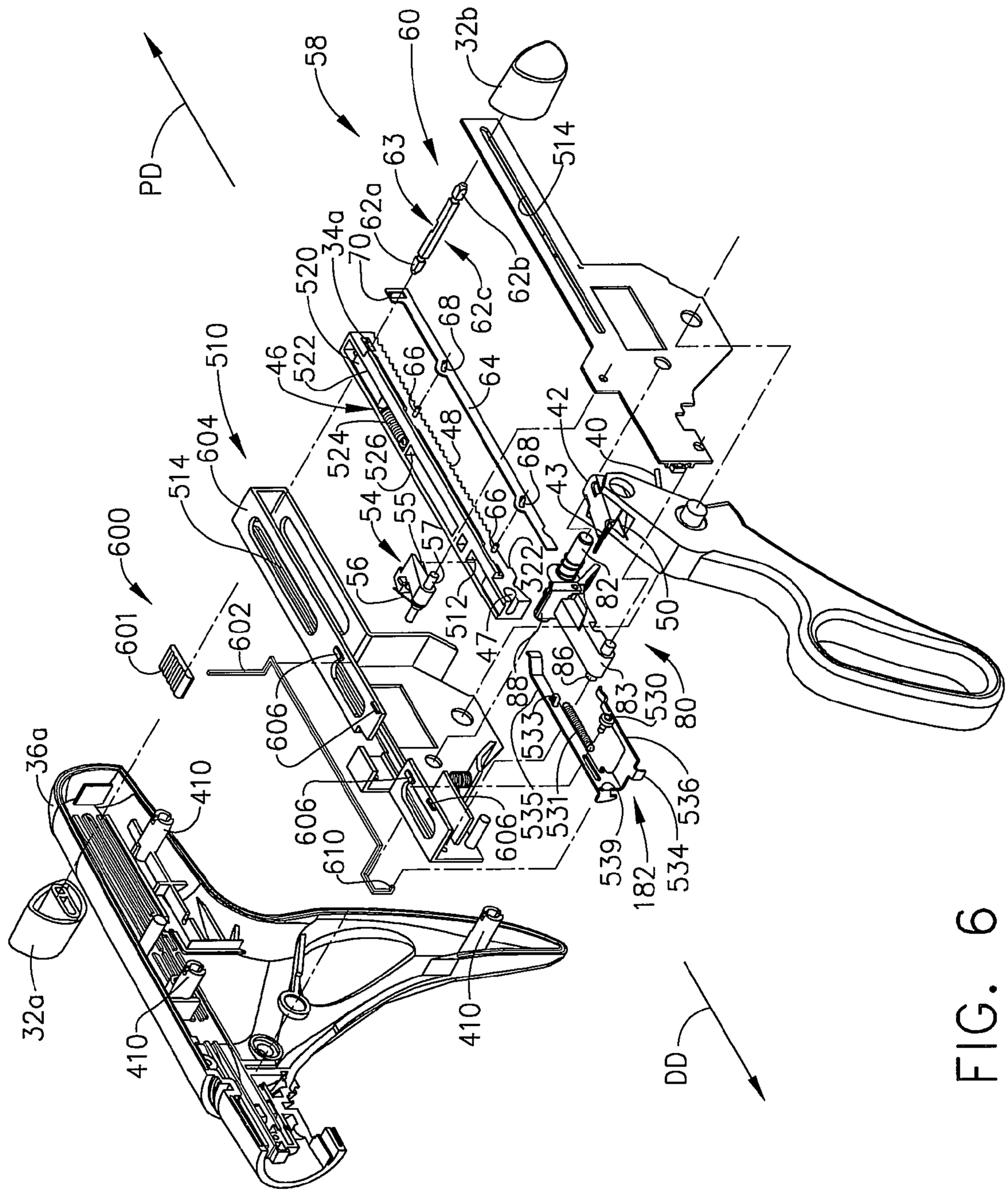
PD
58
60
32b
63
514
62a
34a
70
520
62c
62b
68
510
46
522
66
64
524
526
48
42
40
604
514
68
43
600
54
55
66
57
322
56
512
82
50
601
602
47
86
88
83
530
80
606
533
36a
410
535
531
536
606
606
610
539
182
534
32a
410
410
DD

FIG. 6

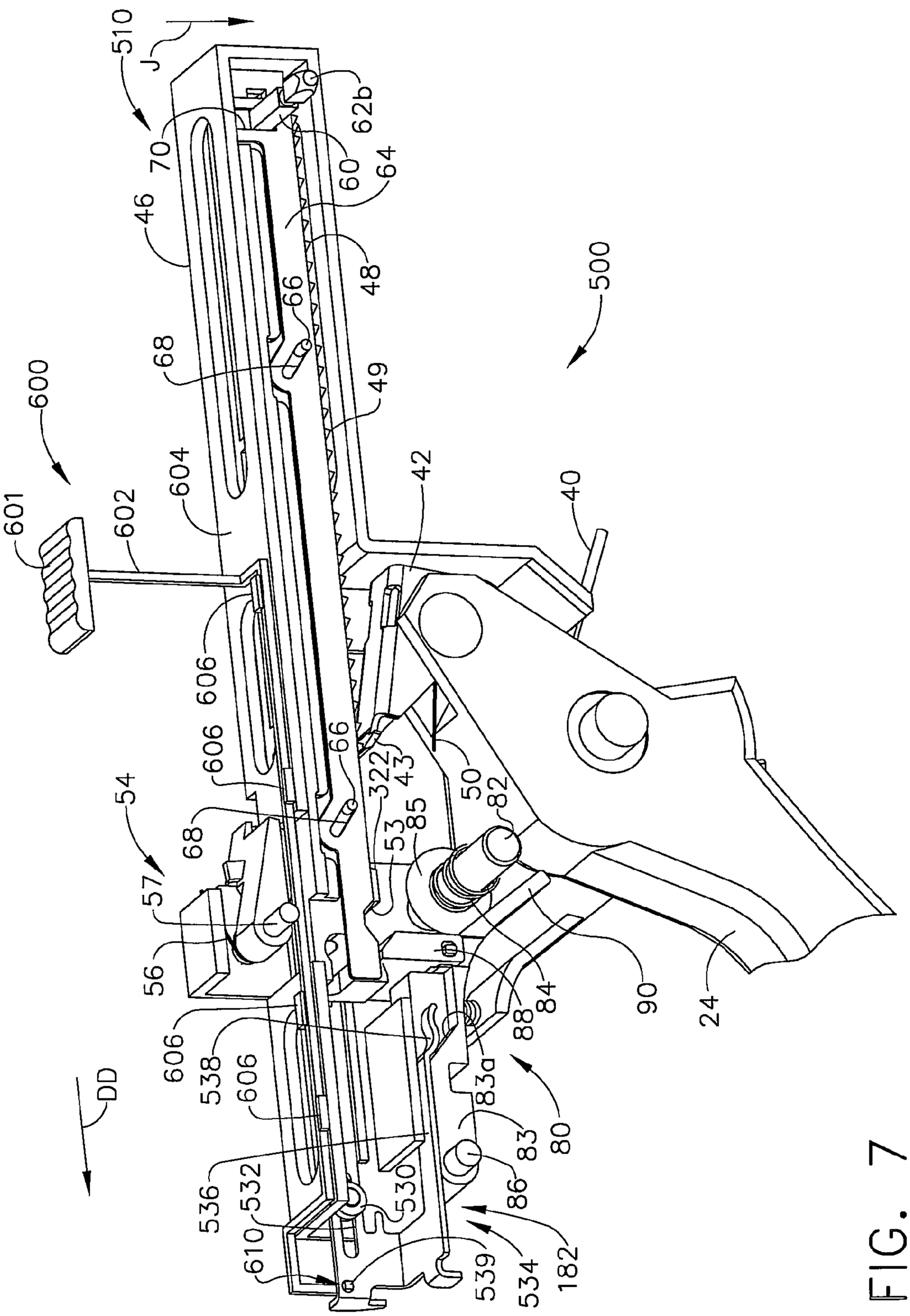
510
J
62b
70
60
64
46
48
66
68
49
600
604
42
40
500
601
602
606
606
66
322
43
50
82
54
68
53
85
57
56
606
538
606
84
88
90
24
DD
83a
80
83
86
536
532
530
610
539
534
182

FIG. 7

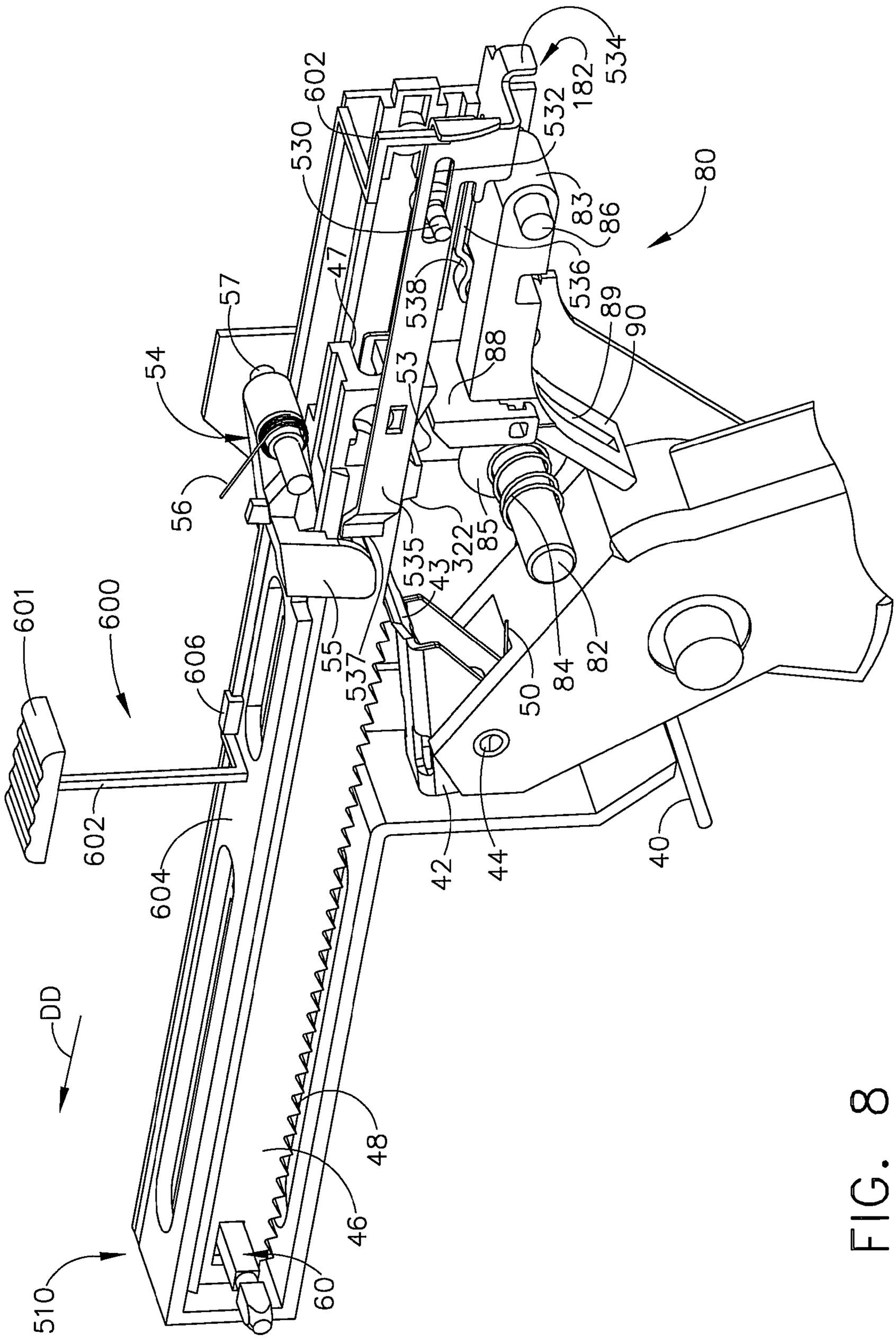
534
182
532
602
530
80
83
86
536
89
90
88
47
538
53
57
54
56
535
322
85
43
55
537
50
84
82
601
600
606
602
604
42
44
40
DD
48
46
60
510

FIG. 8

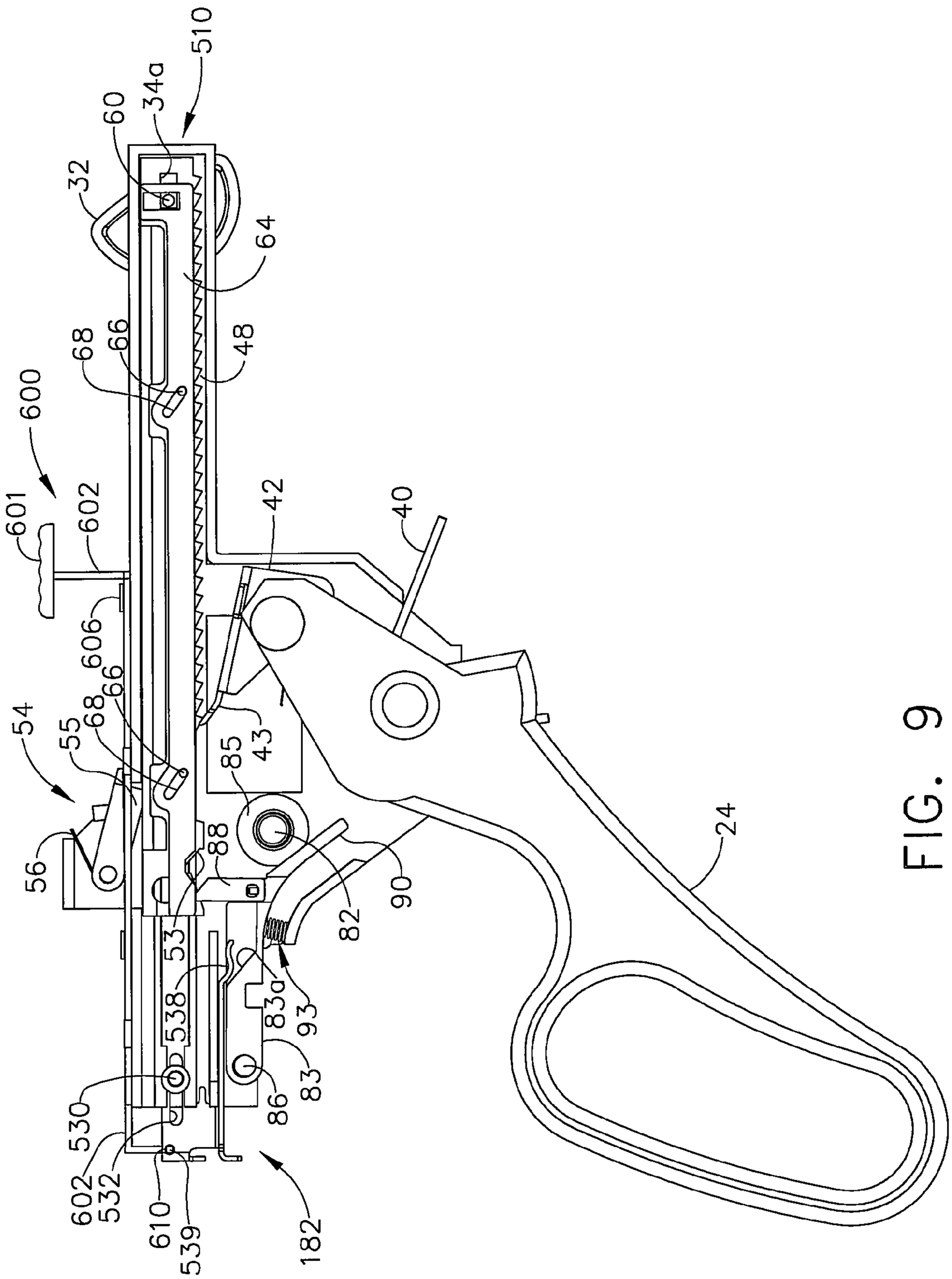
510
34a
60
32
64
48
68
66
600
601
602
42
40
606
66
68
55
54
43
85
56
88
90
24
53
82
538
83a
93
83
86
530
602
532
610
539
182

FIG. 9

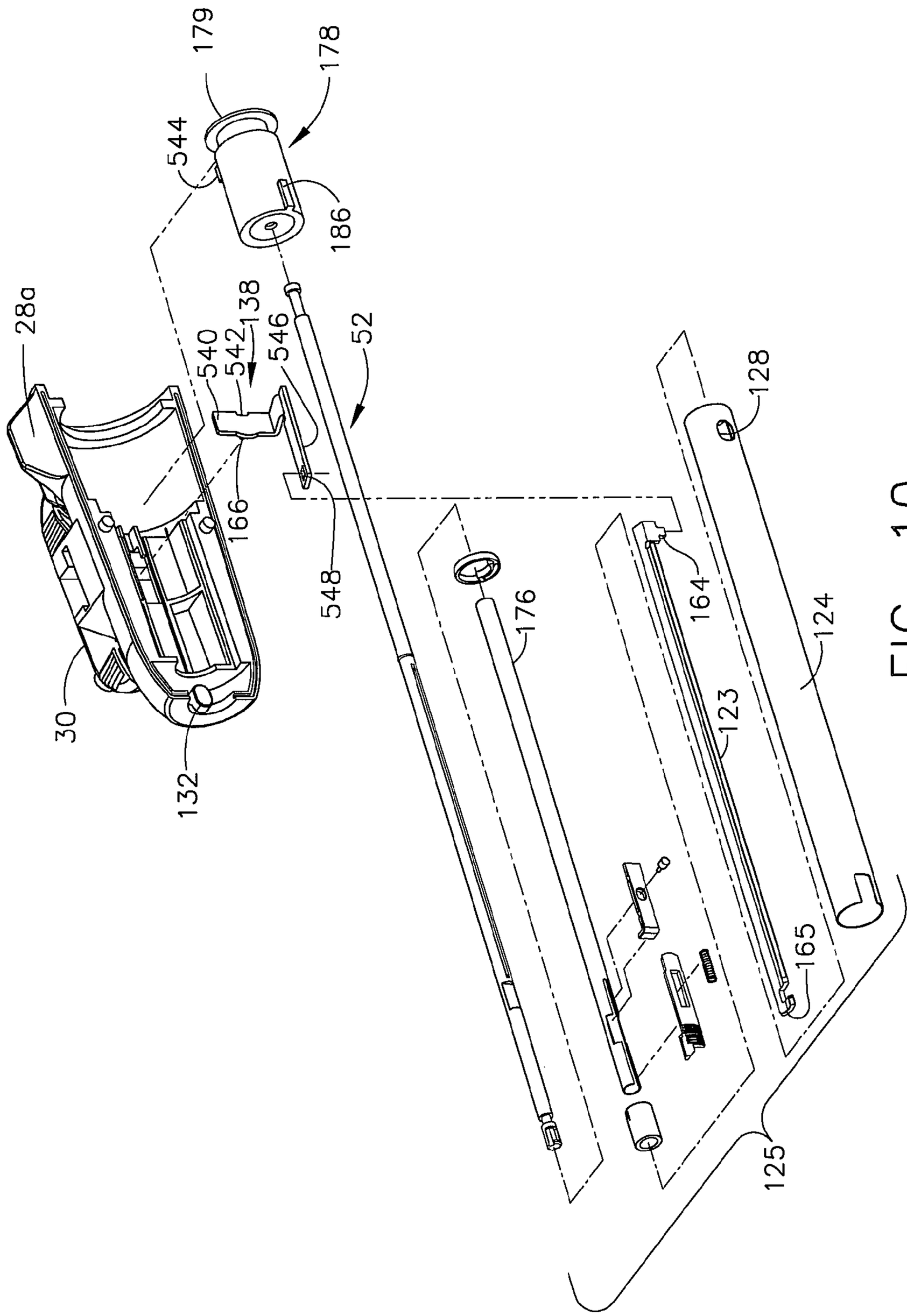
179
178
544
186
28a
138
540
542
546
52
128
166
548
176
164
124
30
123
132
165
125

FIG. 10

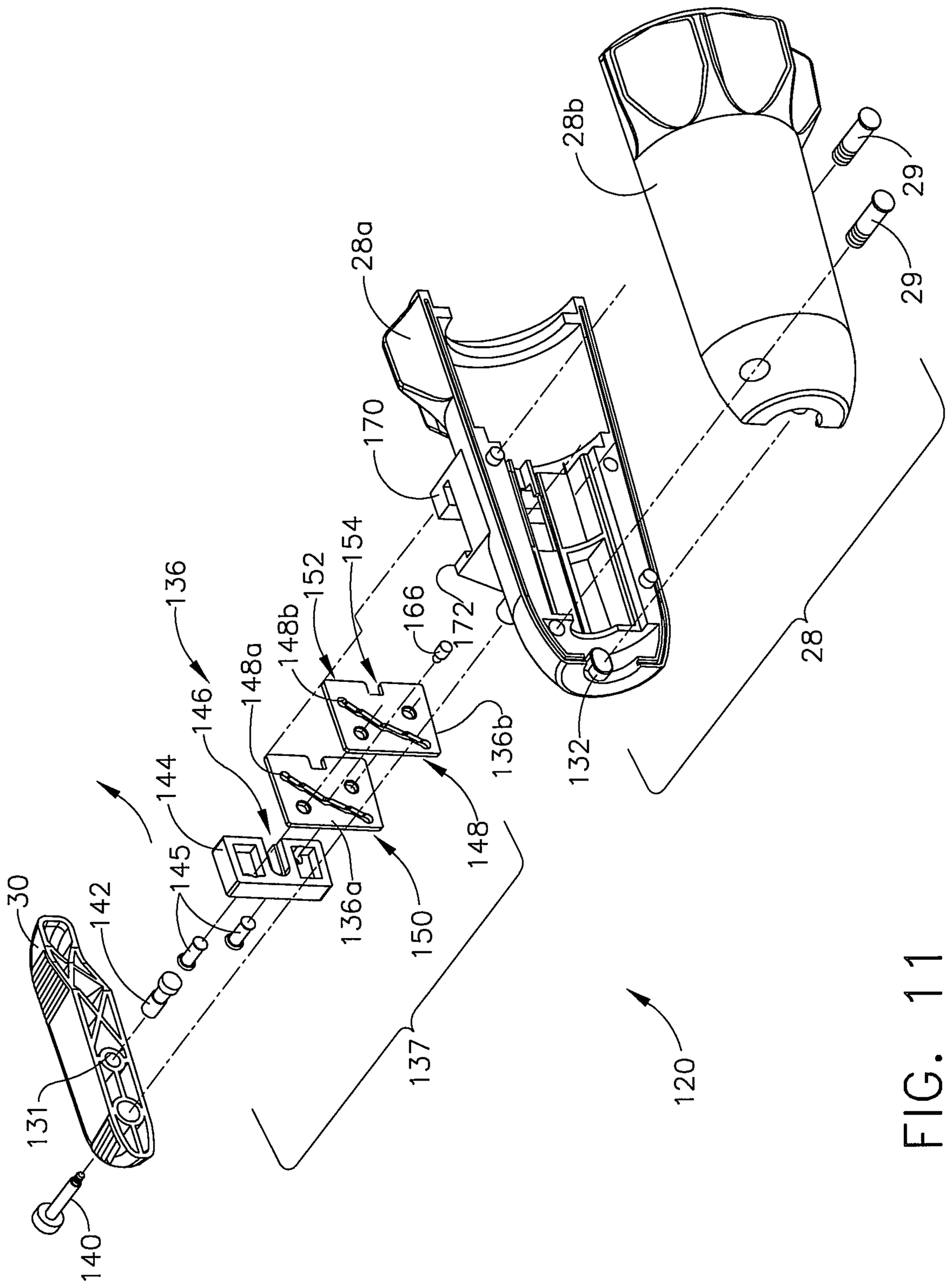
28b
29
29
28a
170
154
152
166
172
136
148b
148a
146
144
145
136b
132
28
148
136a
150
137
30
142
131
140
120

FIG. 11

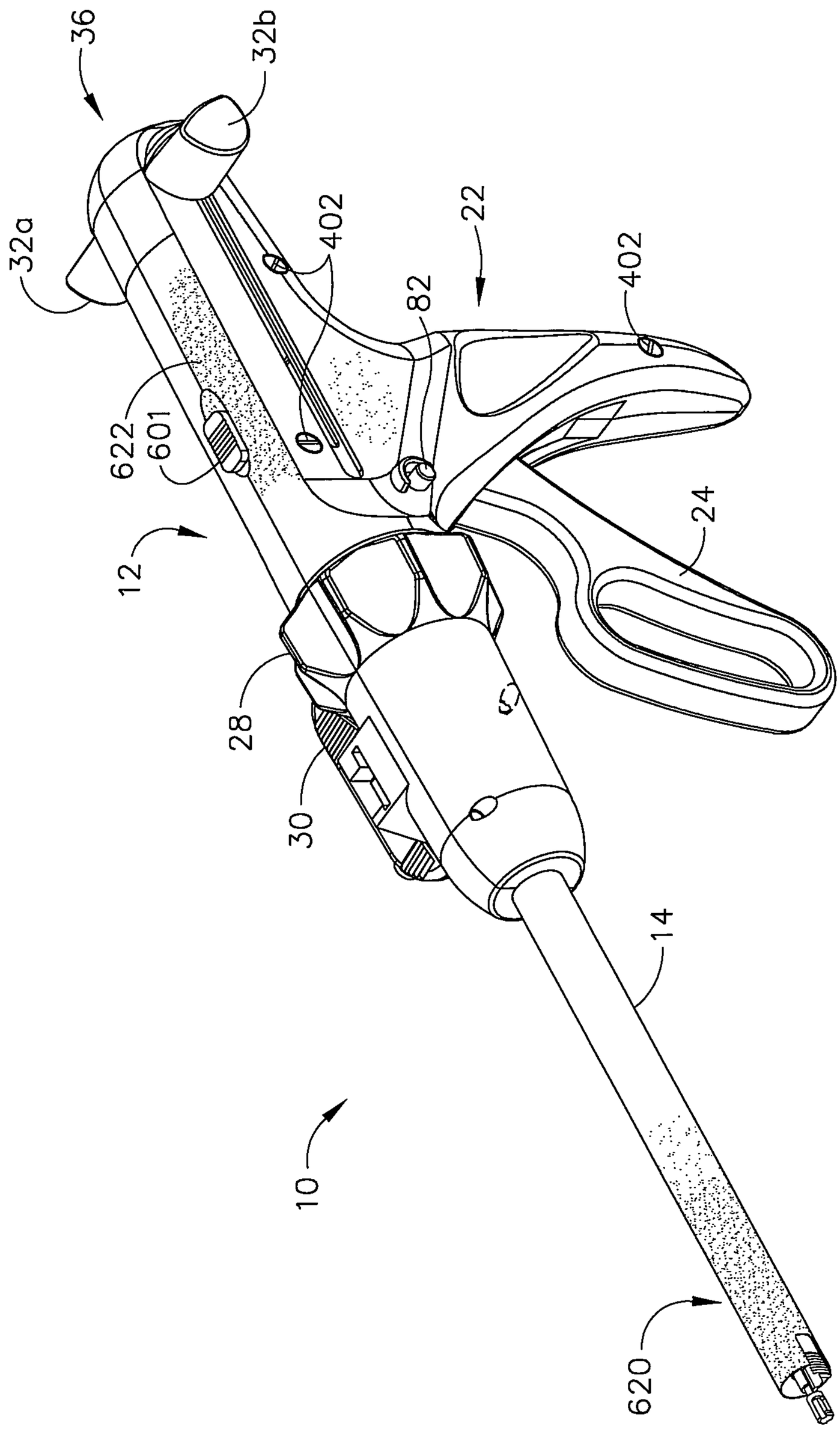

FIG. 12

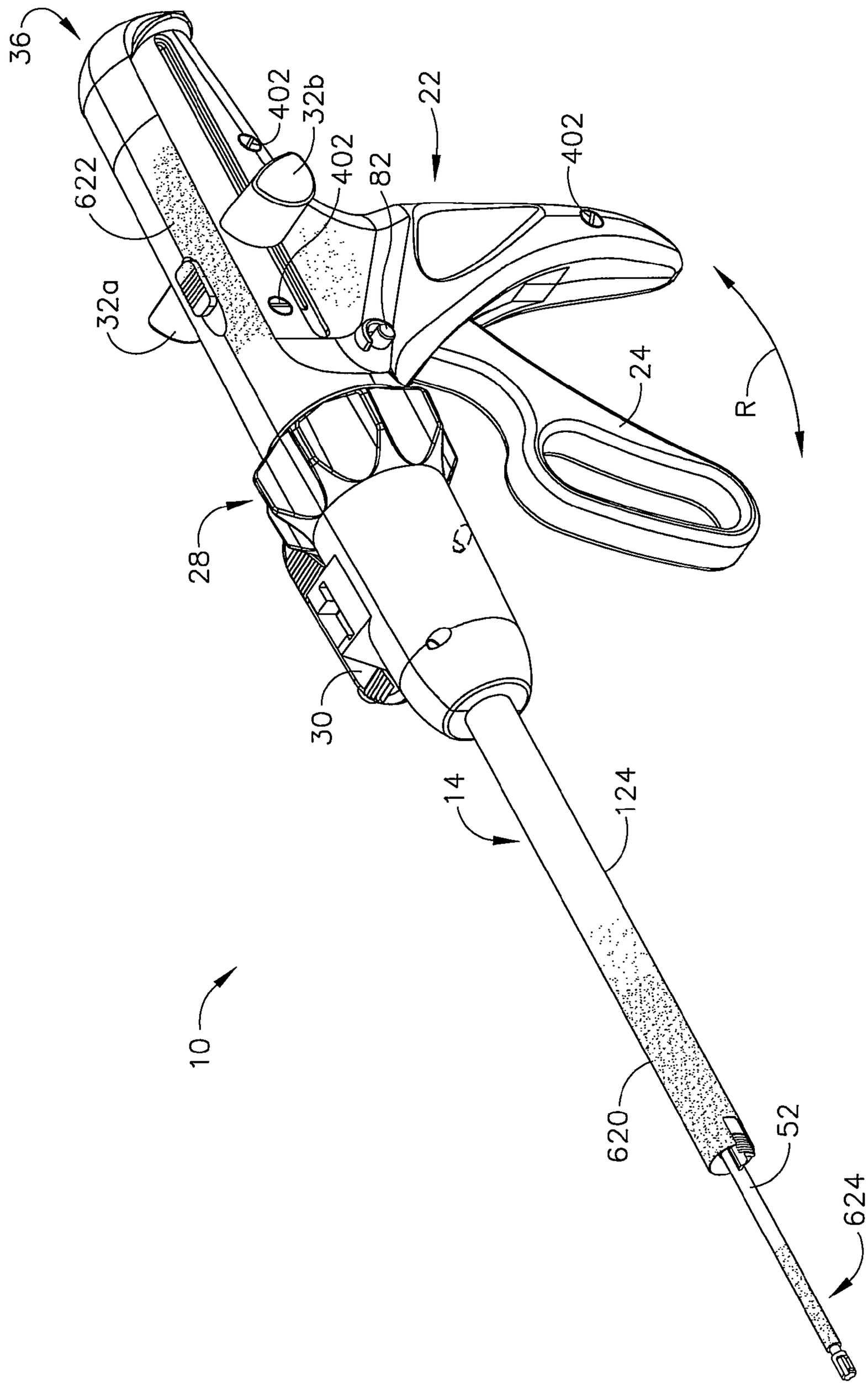

FIG. 13

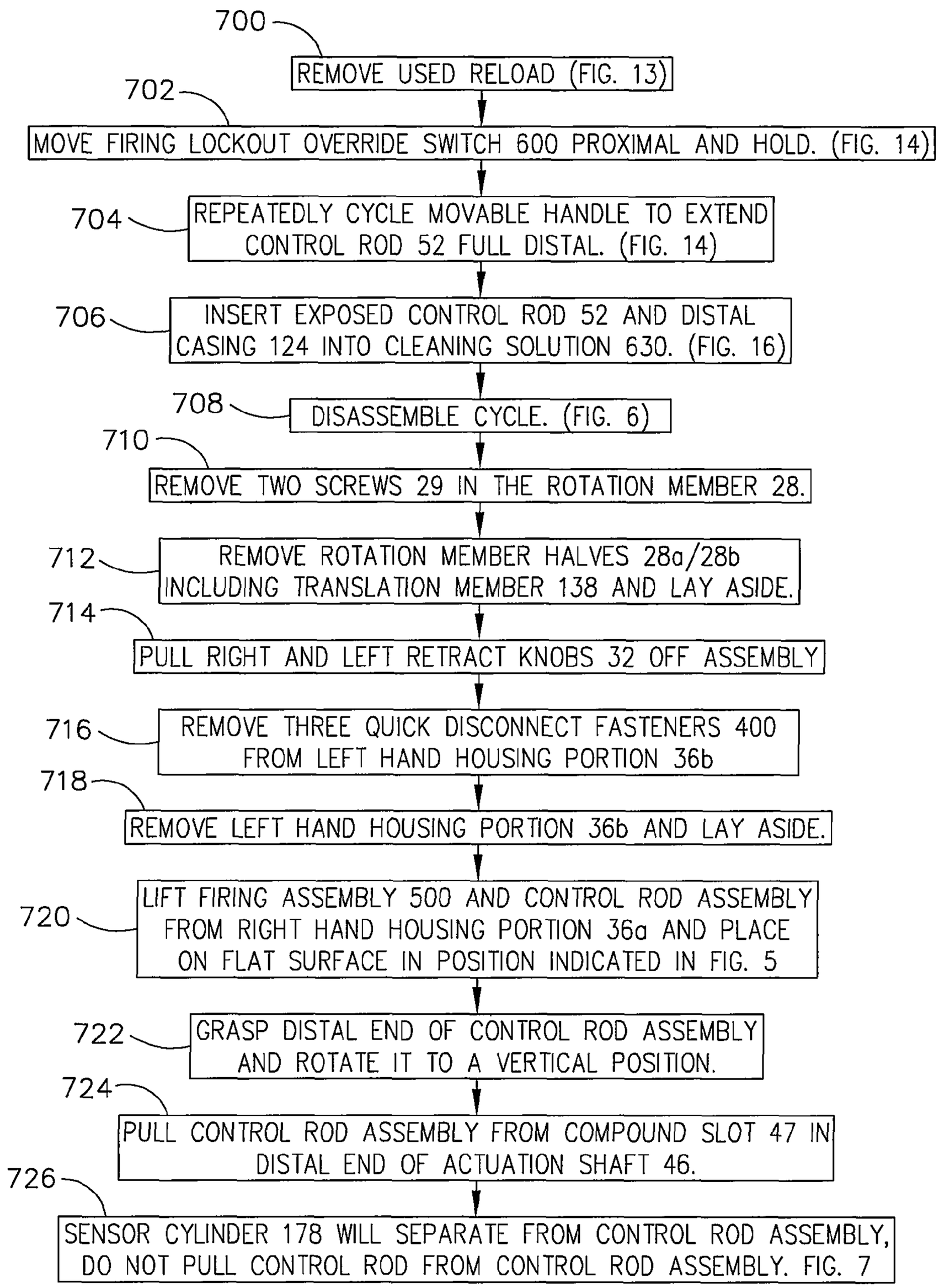
700
REMOVE USED RELOAD (FIG. 13)
702
MOVE FIRING LOCKOUT OVERRIDE SWITCH 600 PROXIMAL AND HOLD. (FIG. 14)
704
REPEATEDLY CYCLE MOVABLE HANDLE TO EXTEND CONTROL ROD 52 FULL DISTAL. (FIG. 14)
706
INSERT EXPOSED CONTROL ROD 52 AND DISTAL CASING 124 INTO CLEANING SOLUTION 630. (FIG. 16)
708
DISASSEMBLE CYCLE. (FIG. 6)
710
REMOVE TWO SCREWS 29 IN THE ROTATION MEMBER 28.
712
REMOVE ROTATION MEMBER HALVES 28a/28b INCLUDING TRANSLATION MEMBER 138 AND LAY ASIDE.
714
PULL RIGHT AND LEFT RETRACT KNOBS 32 OFF ASSEMBLY
716
REMOVE THREE QUICK DISCONNECT FASTENERS 400 FROM LEFT HAND HOUSING PORTION 36b
718
REMOVE LEFT HAND HOUSING PORTION 36b AND LAY ASIDE.
720
LIFT FIRING ASSEMBLY 500 AND CONTROL ROD ASSEMBLY FROM RIGHT HAND HOUSING PORTION 36a AND PLACE ON FLAT SURFACE IN POSITION INDICATED IN FIG. 5
722
GRASP DISTAL END OF CONTROL ROD ASSEMBLY AND ROTATE IT TO A VERTICAL POSITION.
724
PULL CONTROL ROD ASSEMBLY FROM COMPOUND SLOT 47 IN DISTAL END OF ACTUATION SHAFT 46.
726
SENSOR CYLINDER 178 WILL SEPARATE FROM CONTROL ROD ASSEMBLY, DO NOT PULL CONTROL ROD FROM CONTROL ROD ASSEMBLY. FIG. 7

FIG. 14

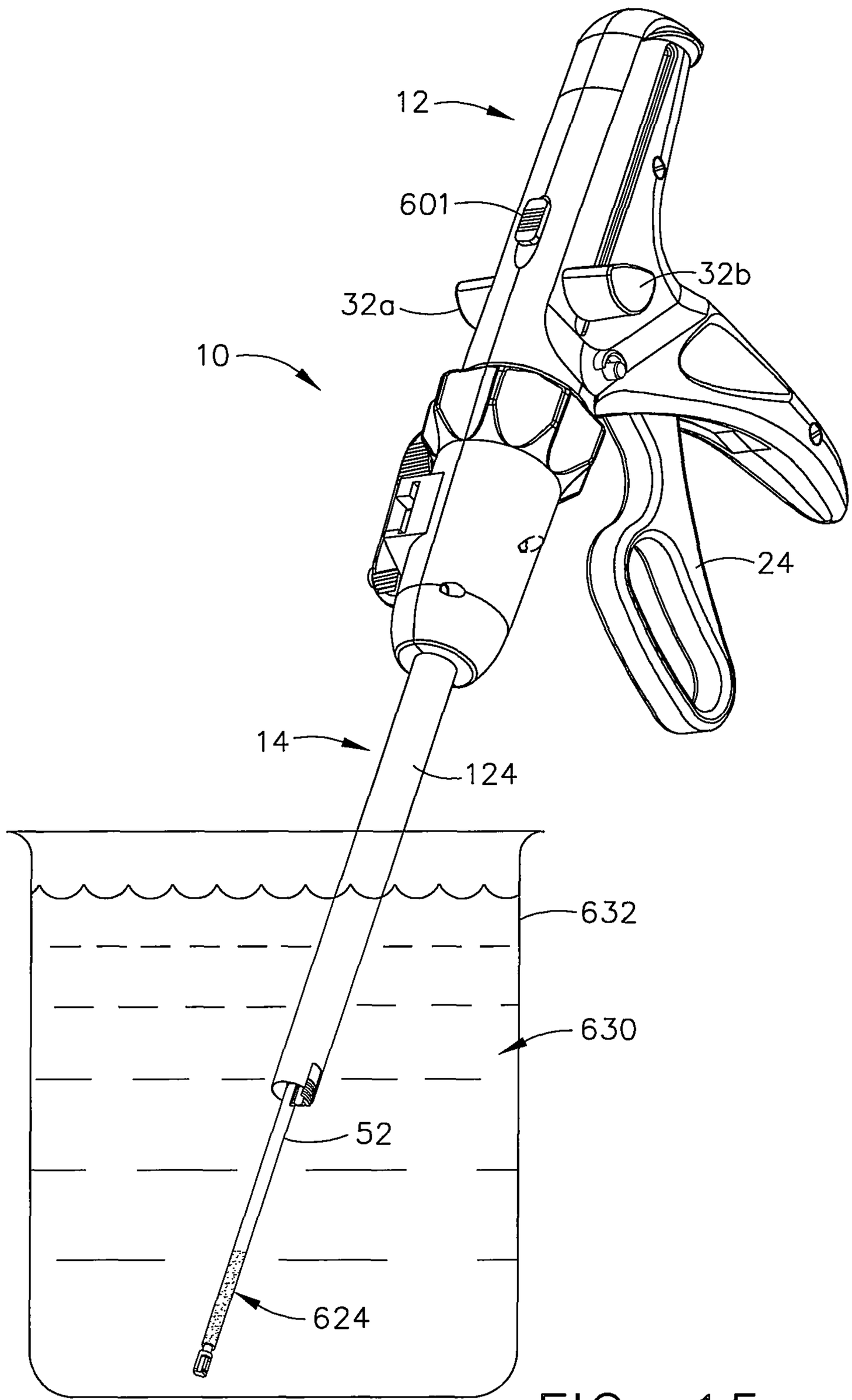

FIG. 15

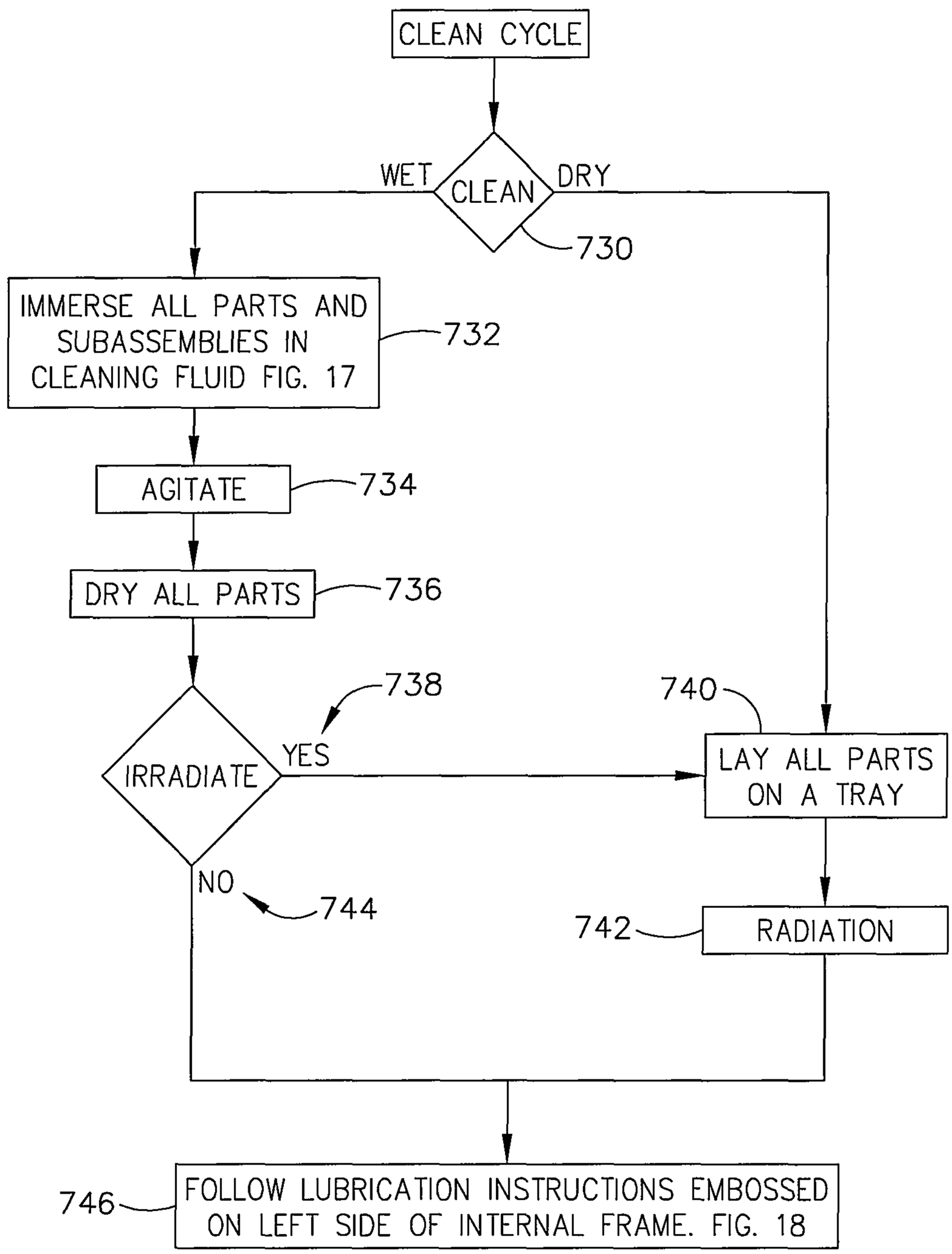
CLEAN CYCLE
WET
CLEAN
DRY
730
IMMERSE ALL PARTS AND SUBASSEMBLIES IN CLEANING FLUID FIG. 17
732
AGITATE
734
DRY ALL PARTS
736
738
IRRADIATE
YES
740
LAY ALL PARTS ON A TRAY
NO
744
742
RADIATION
746
FOLLOW LUBRICATION INSTRUCTIONS EMBOSSED ON LEFT SIDE OF INTERNAL FRAME. FIG. 18

FIG. 16

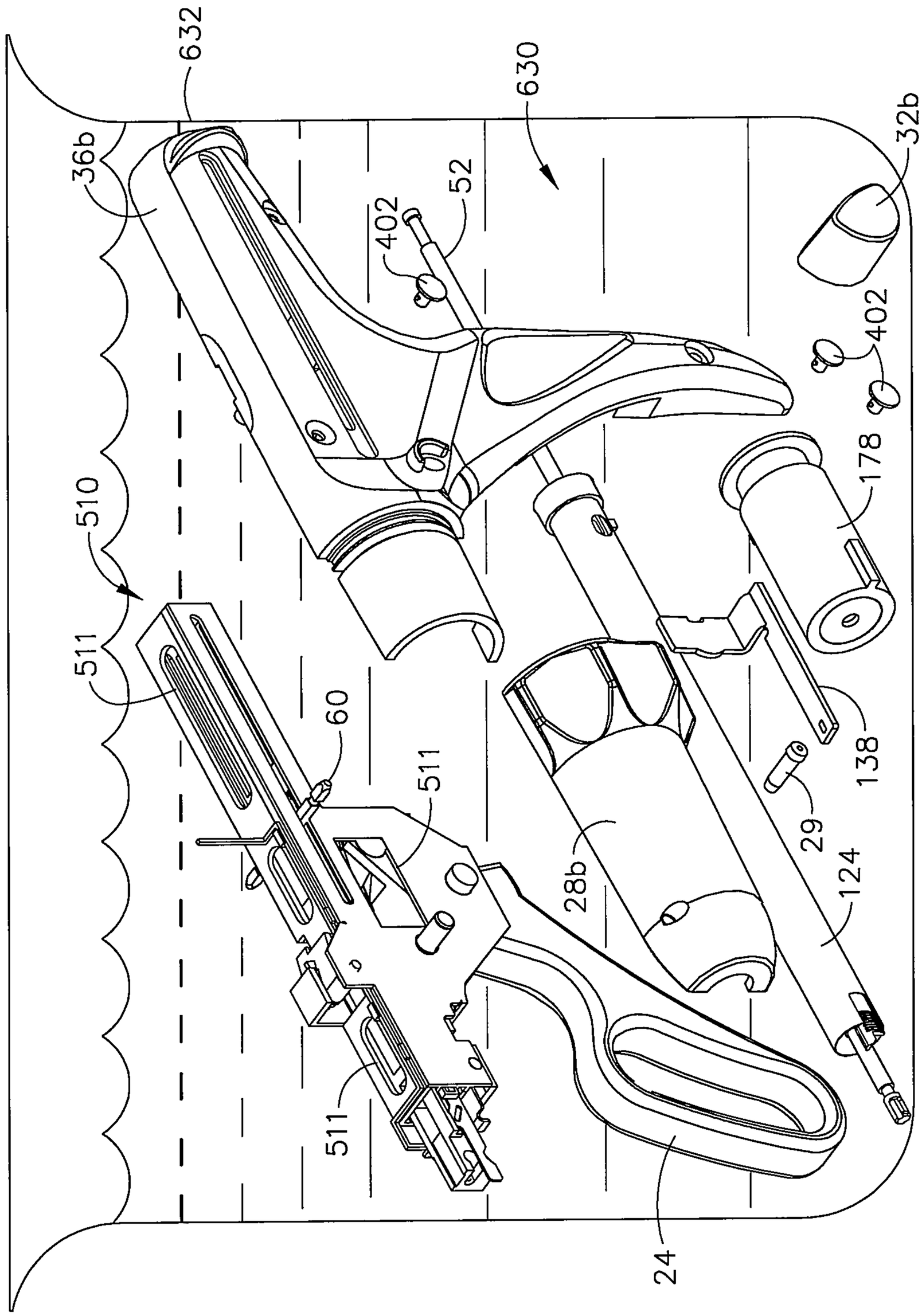
632
630
36b
52
402
32b
402
510
178
511
60
511
138
29
28b
124
511
24

FIG. 17

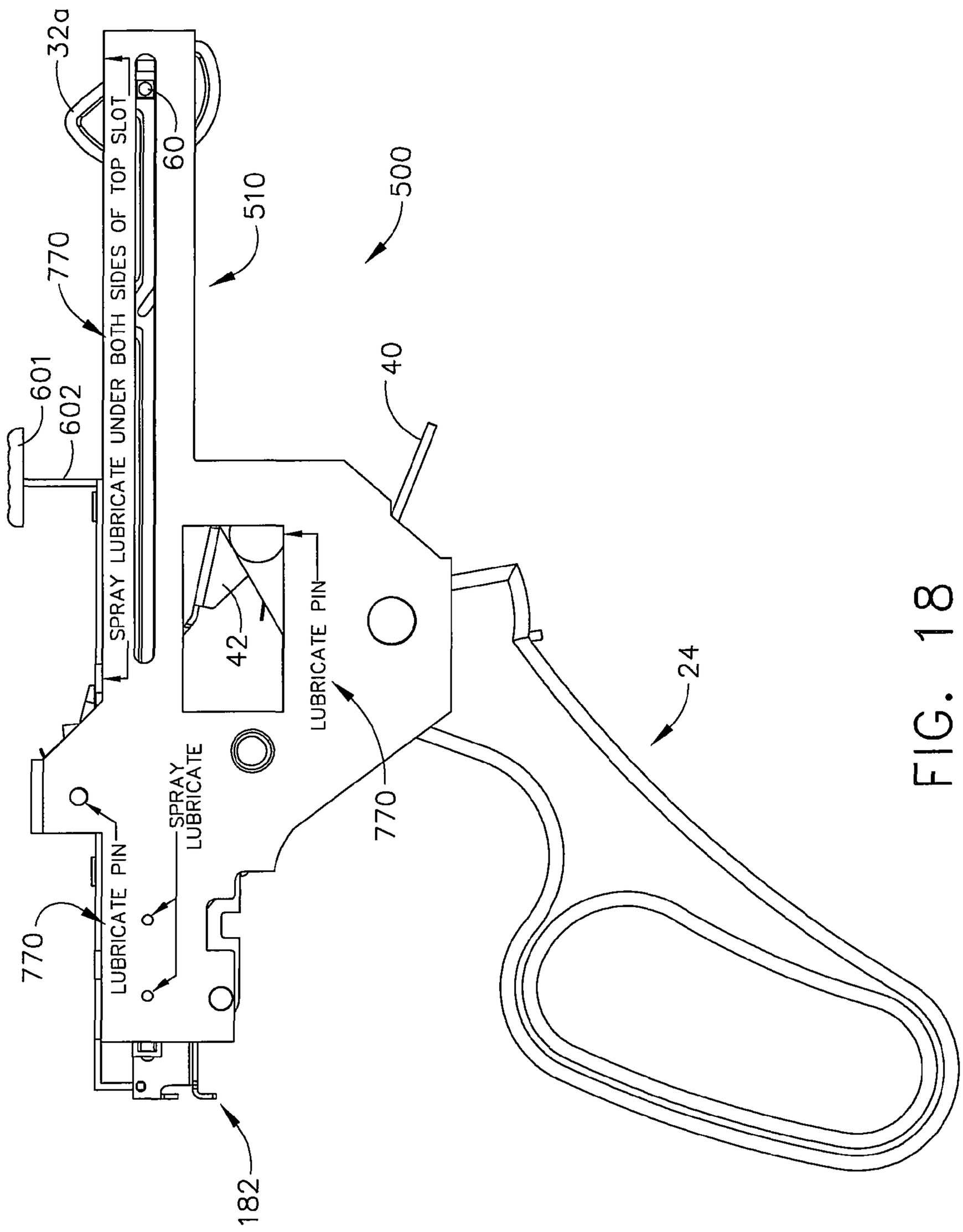
32a
SPRAY LUBRICATE UNDER BOTH SIDES OF TOP SLOT
60
510
500
770
601
602
40
42
LUBRICATE PIN
24
SPRAY LUBRICATE
770
LUBRICATE PIN
770
182

FIG. 18

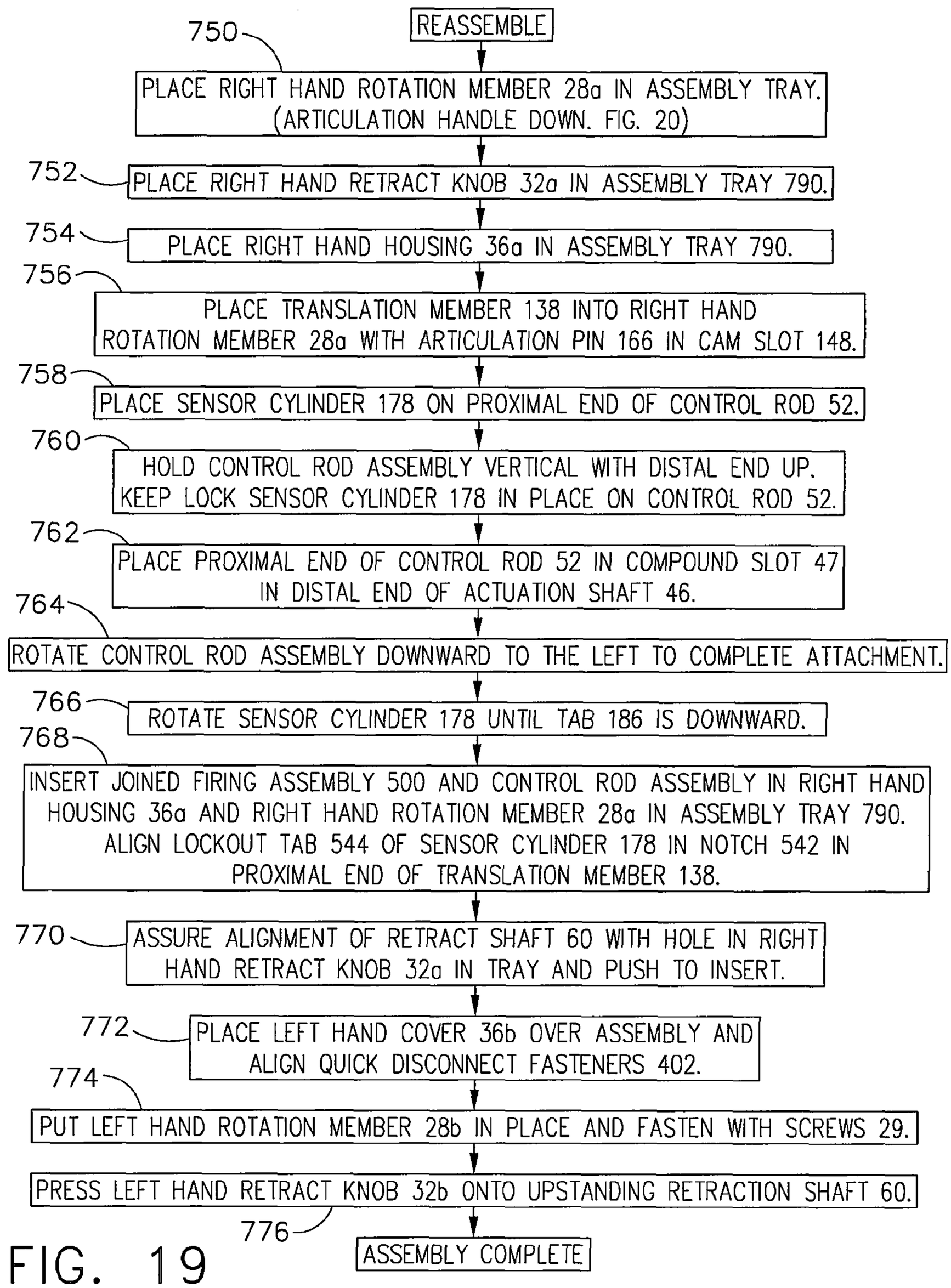
REASSEMBLE
750
PLACE RIGHT HAND ROTATION MEMBER 28a IN ASSEMBLY TRAY. (ARTICULATION HANDLE DOWN. FIG. 20)
752
PLACE RIGHT HAND RETRACT KNOB 32a IN ASSEMBLY TRAY 790.
754
PLACE RIGHT HAND HOUSING 36a IN ASSEMBLY TRAY 790.
756
PLACE TRANSLATION MEMBER 138 INTO RIGHT HAND ROTATION MEMBER 28a WITH ARTICULATION PIN 166 IN CAM SLOT 148.
758
PLACE SENSOR CYLINDER 178 ON PROXIMAL END OF CONTROL ROD 52.
760
HOLD CONTROL ROD ASSEMBLY VERTICAL WITH DISTAL END UP. KEEP LOCK SENSOR CYLINDER 178 IN PLACE ON CONTROL ROD 52.
762
PLACE PROXIMAL END OF CONTROL ROD 52 IN COMPOUND SLOT 47 IN DISTAL END OF ACTUATION SHAFT 46.
764
ROTATE CONTROL ROD ASSEMBLY DOWNWARD TO THE LEFT TO COMPLETE ATTACHMENT.
766
ROTATE SENSOR CYLINDER 178 UNTIL TAB 186 IS DOWNWARD.
768
INSERT JOINED FIRING ASSEMBLY 500 AND CONTROL ROD ASSEMBLY IN RIGHT HAND HOUSING 36a AND RIGHT HAND ROTATION MEMBER 28a IN ASSEMBLY TRAY 790. ALIGN LOCKOUT TAB 544 OF SENSOR CYLINDER 178 IN NOTCH 542 IN PROXIMAL END OF TRANSLATION MEMBER 138.
770
ASSURE ALIGNMENT OF RETRACT SHAFT 60 WITH HOLE IN RIGHT HAND RETRACT KNOB 32a IN TRAY AND PUSH TO INSERT.
772
PLACE LEFT HAND COVER 36b OVER ASSEMBLY AND ALIGN QUICK DISCONNECT FASTENERS 402.
774
PUT LEFT HAND ROTATION MEMBER 28b IN PLACE AND FASTEN WITH SCREWS 29.
PRESS LEFT HAND RETRACT KNOB 32b ONTO UPSTANDING RETRACTION SHAFT 60.
776
ASSEMBLY COMPLETE

FIG. 19

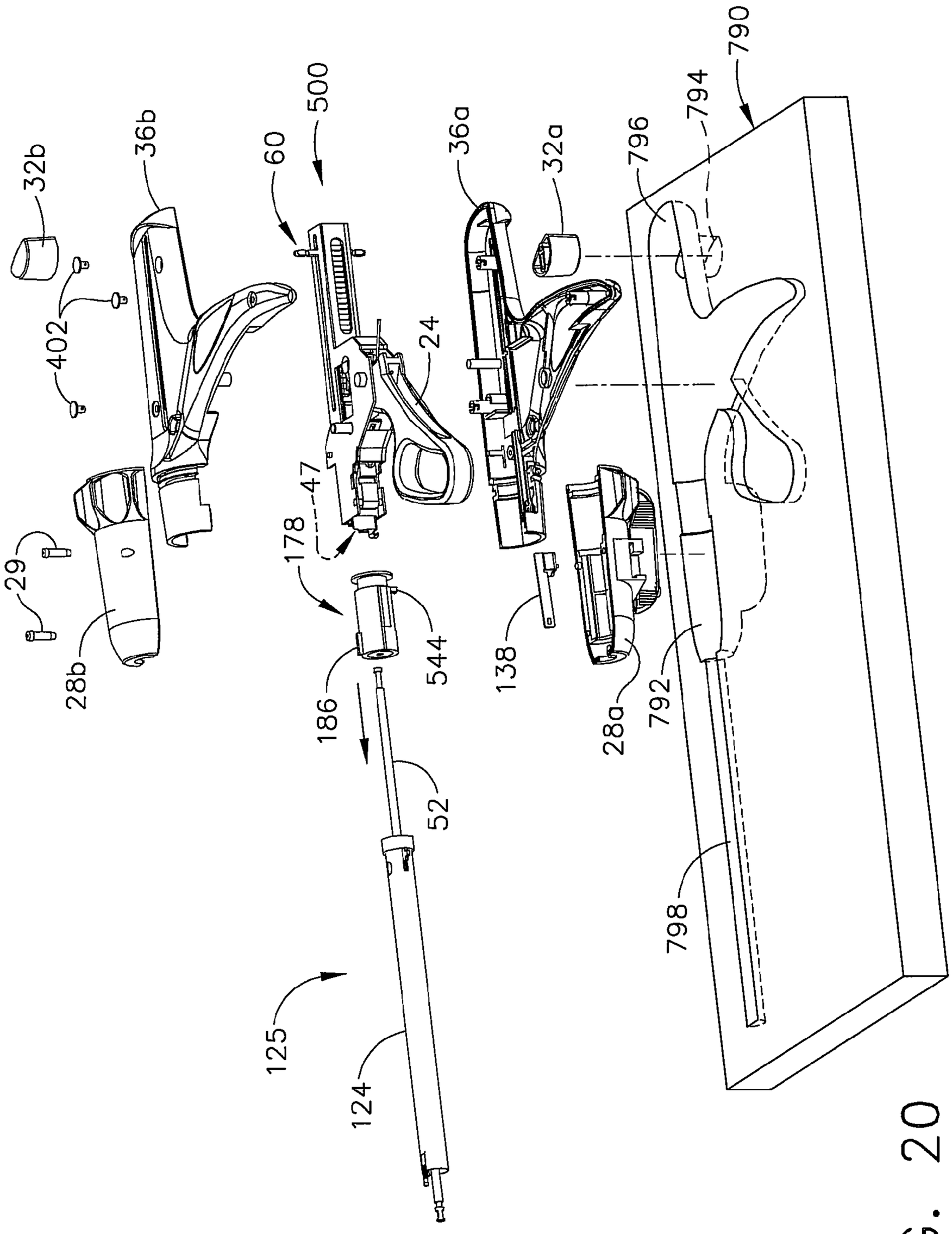
32b
36b
60
500
36a
32a
796
794
790
402
24
47
178
29
28b
544
186
138
28a
792
52
798
125
124

FIG. 20

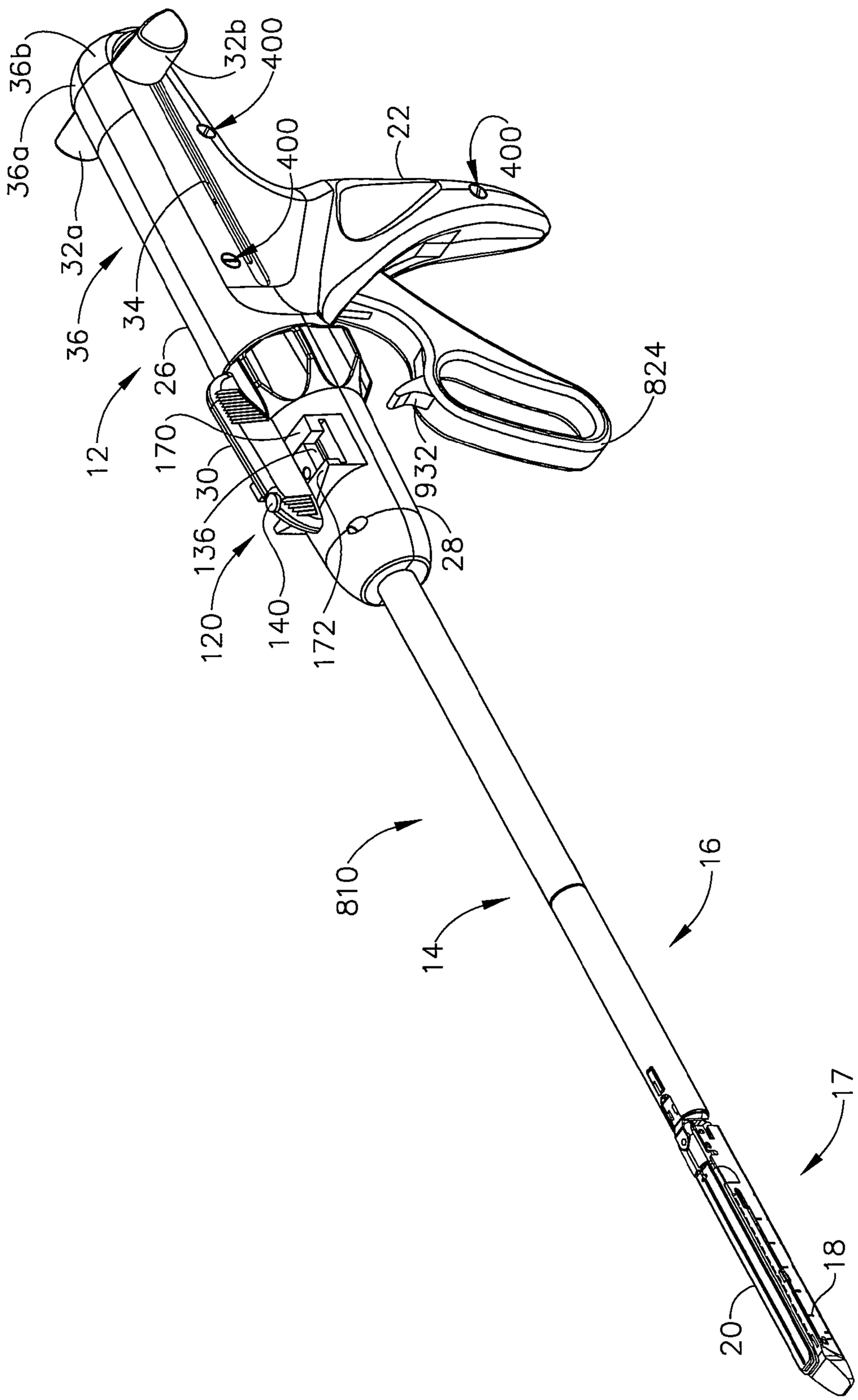
36b
36a
32a
36
34
26
12
170
30
136
120
140
172
28
932
824
22
400
400
400
32b
810
14
16
17
18
20

FIG. 21

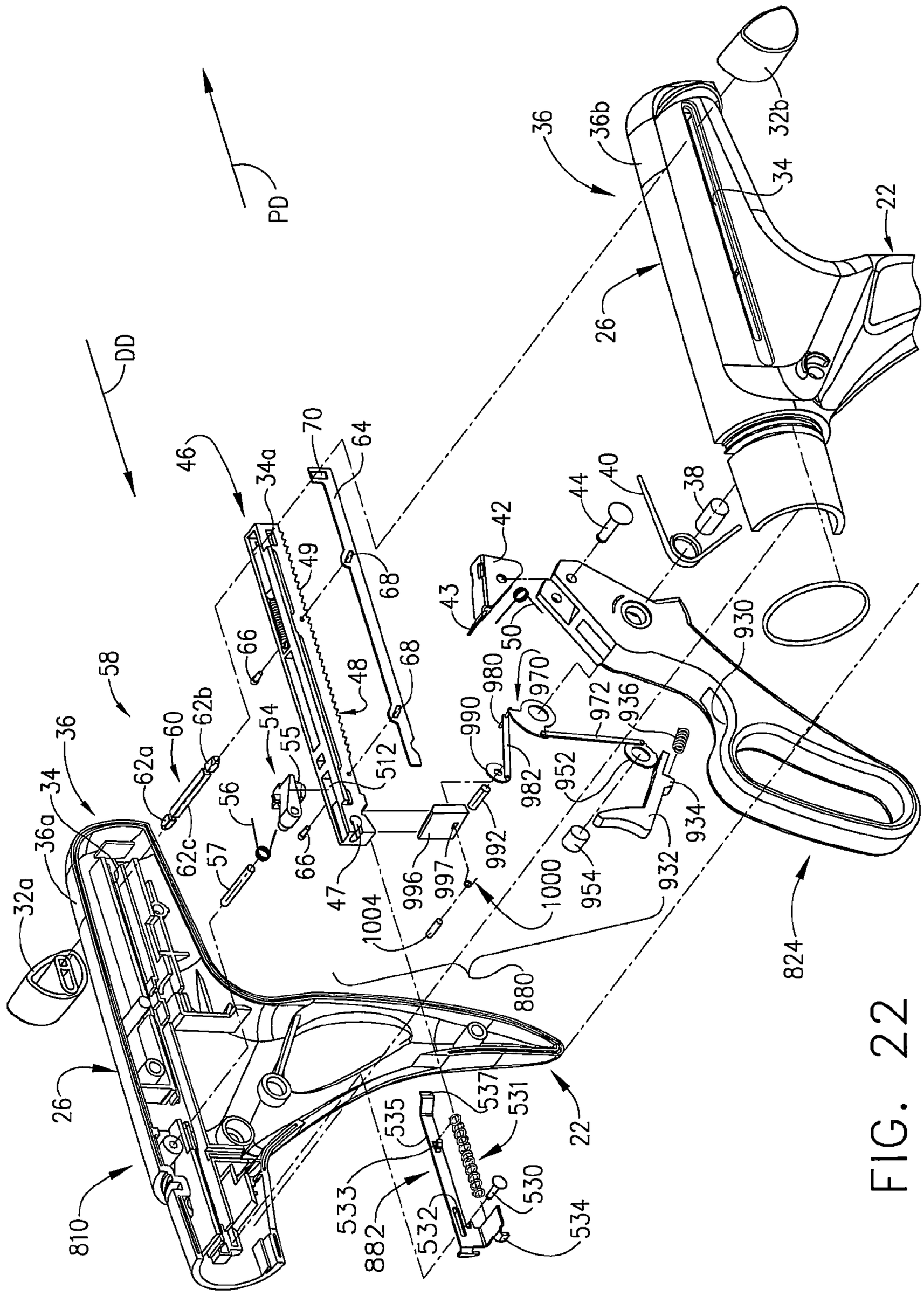
PD
DD
36
36b
32b
34
22
26
46
34a
70
64
49
68
42
44
40
38
43
50
930
58
66
48
980
970
972
936
990
982
952
934
932
954
992
997
996
1000
1004
47
512
54
55
56
57
62a
60
62b
62c
36a
32a
824
880
537
531
535
533
882
532
530
534
810

FIG. 22

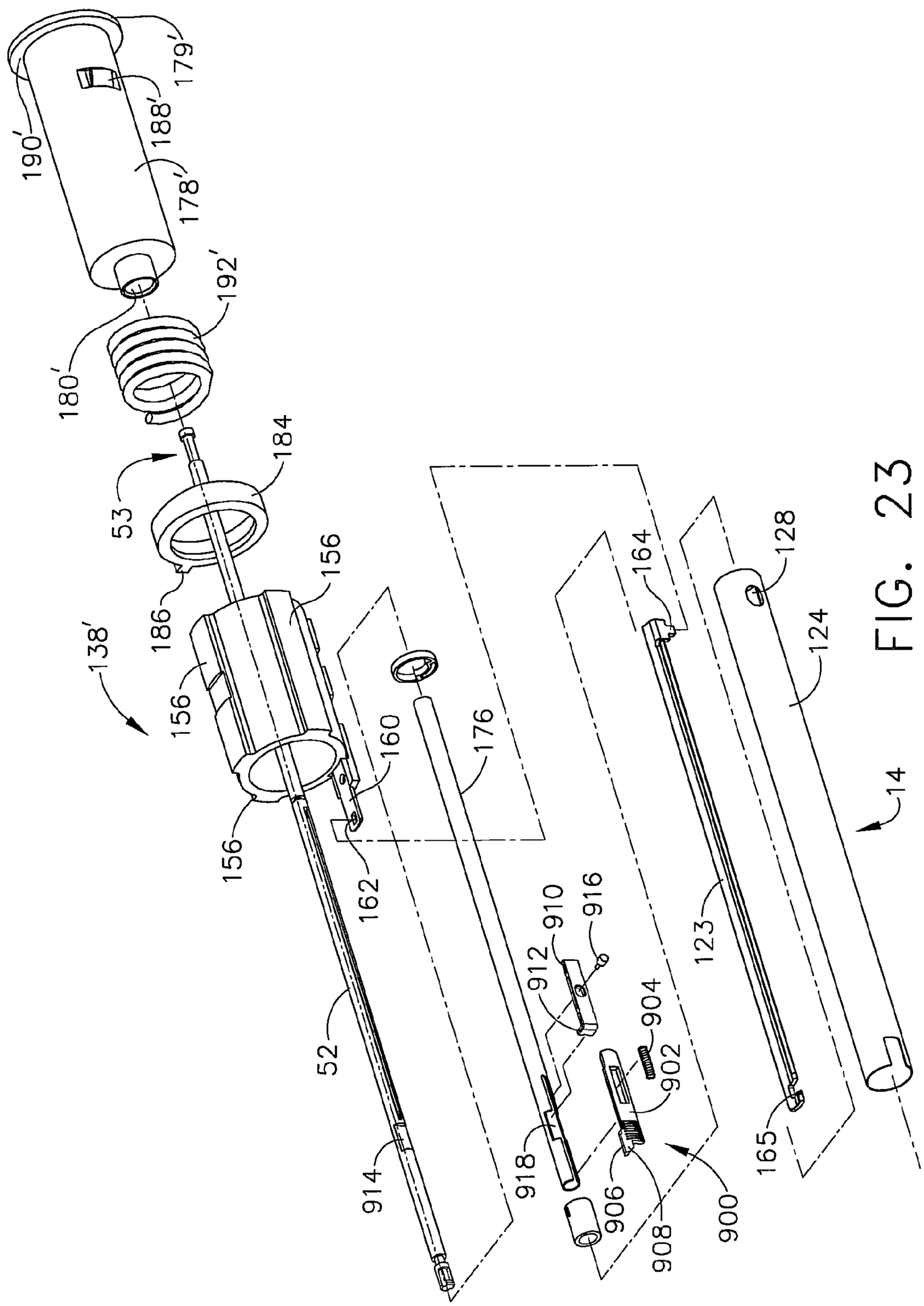
190'
179'
188'
178'
192'
180'
184
53
186
156
138'
156
160
176
156
162
164
128
124
14
123
52
910
916
912
904
902
914
918
906
908
900
165

FIG. 23

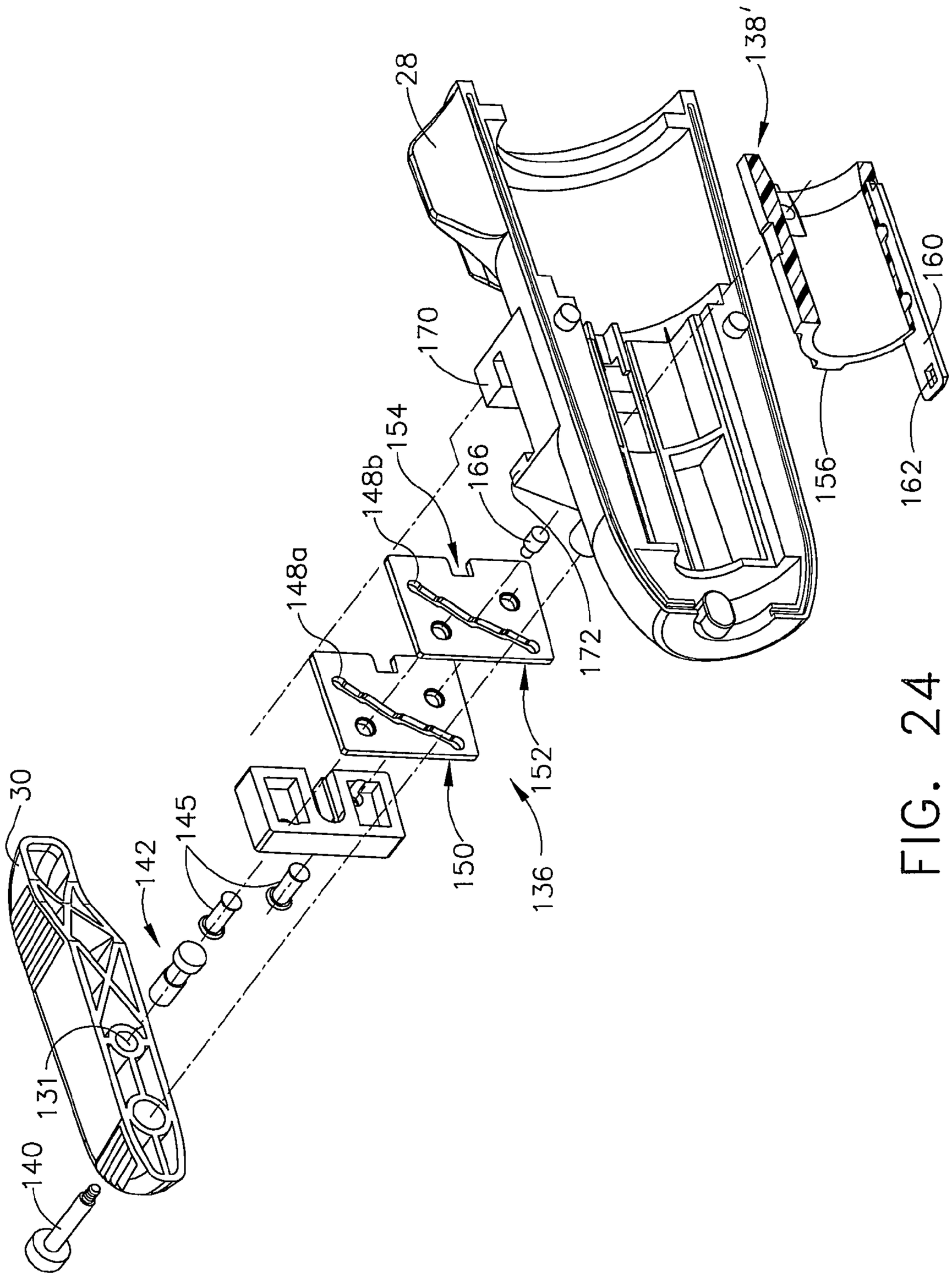
28
138'
160
170
154
148b
166
148a
172
156
162
152
150
136
30
145
142
131
140

FIG. 24

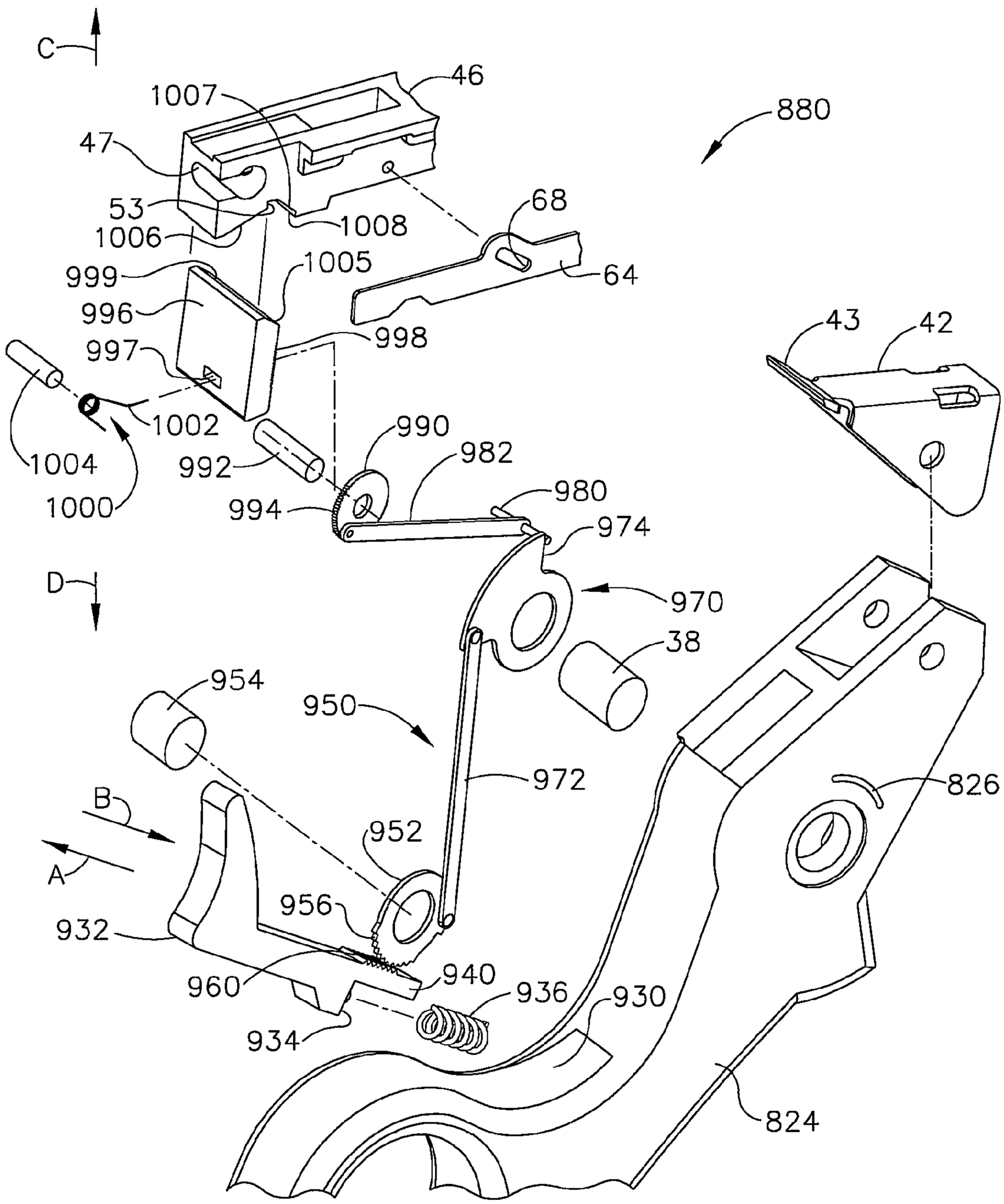
C
46
1007
880
47
53
68
1008
1006
1005
999
64
996
43
42
998
997
1002
990
1004
992
982
1000
980
994
974
D
970
38
954
950
972
826
B
952
A
956
932
960
940
936
930
934
824

FIG. 25

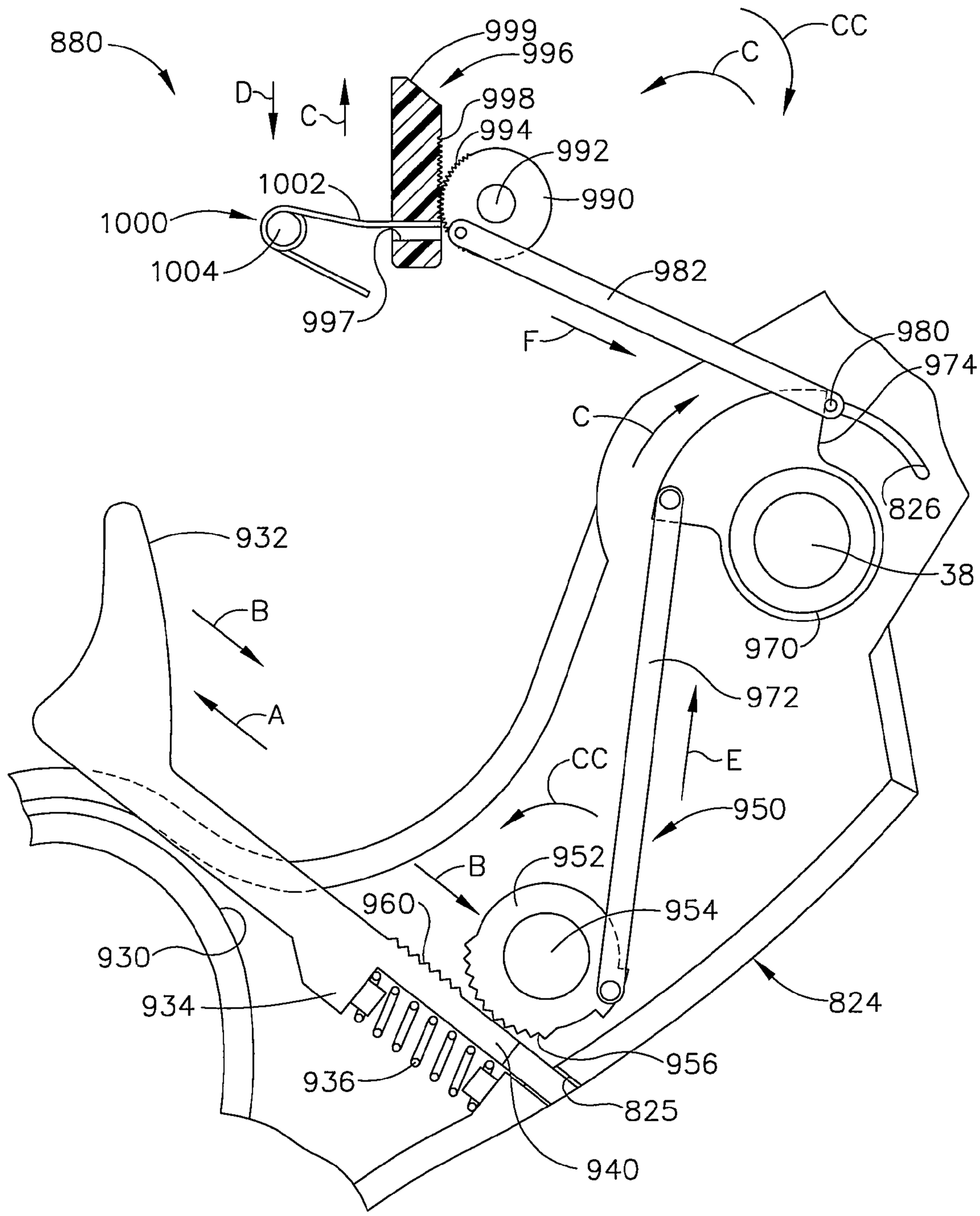
880
999
996
CC
C
D
C
998
994
992
990
1002
1000
1004
982
997
F
980
974
C
826
932
38
B
970
A
972
CC
E
950
952
B
960
954
930
934
824
956
936
825
940

FIG. 26

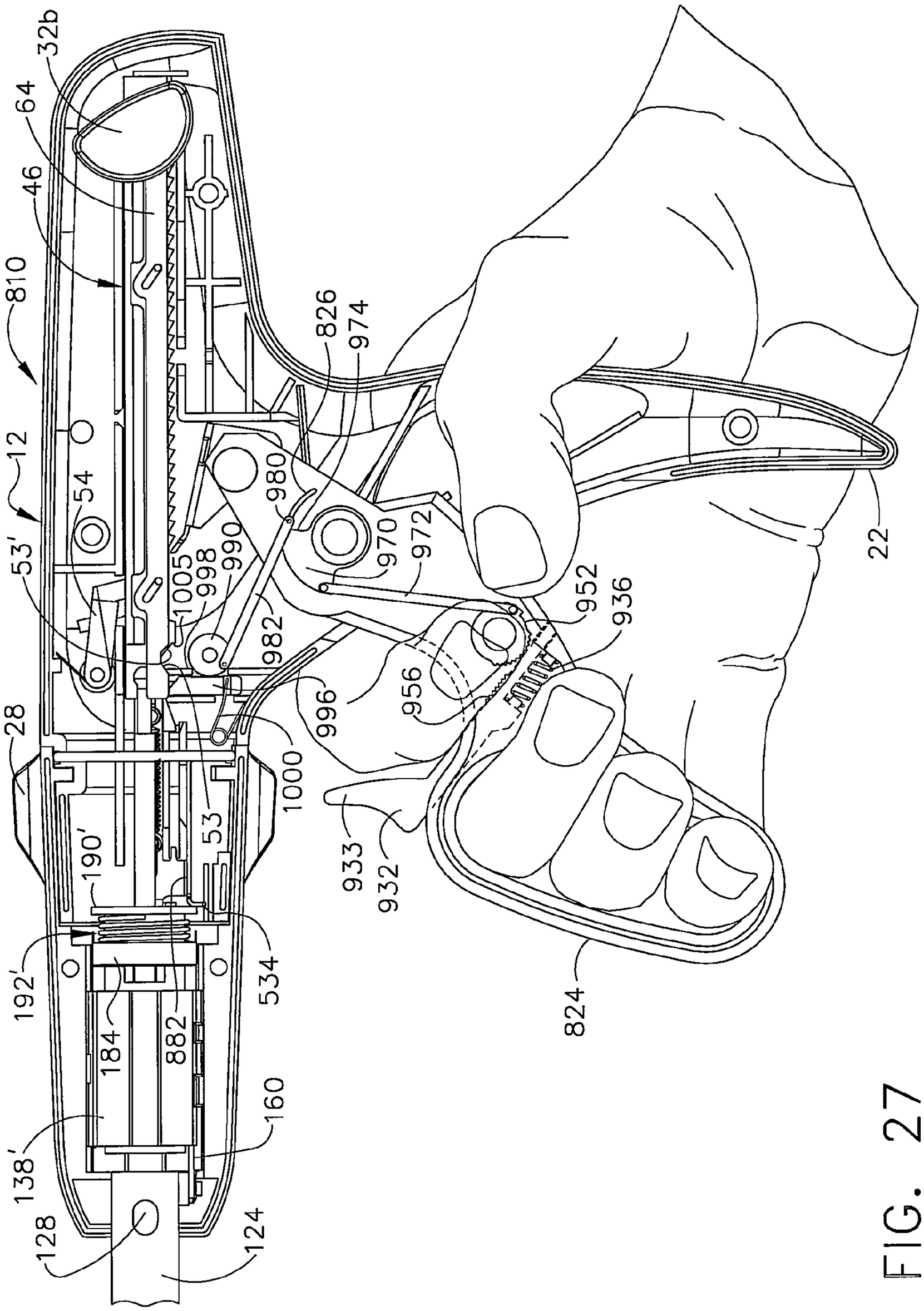
32b
64
46
810
12
53'
54
28
190'
192'
184
882
138'
128
124
160
534
53
1005
998
990
980
982
1000
996
826
974
970
972
956
952
936
933
932
824
22

FIG. 27

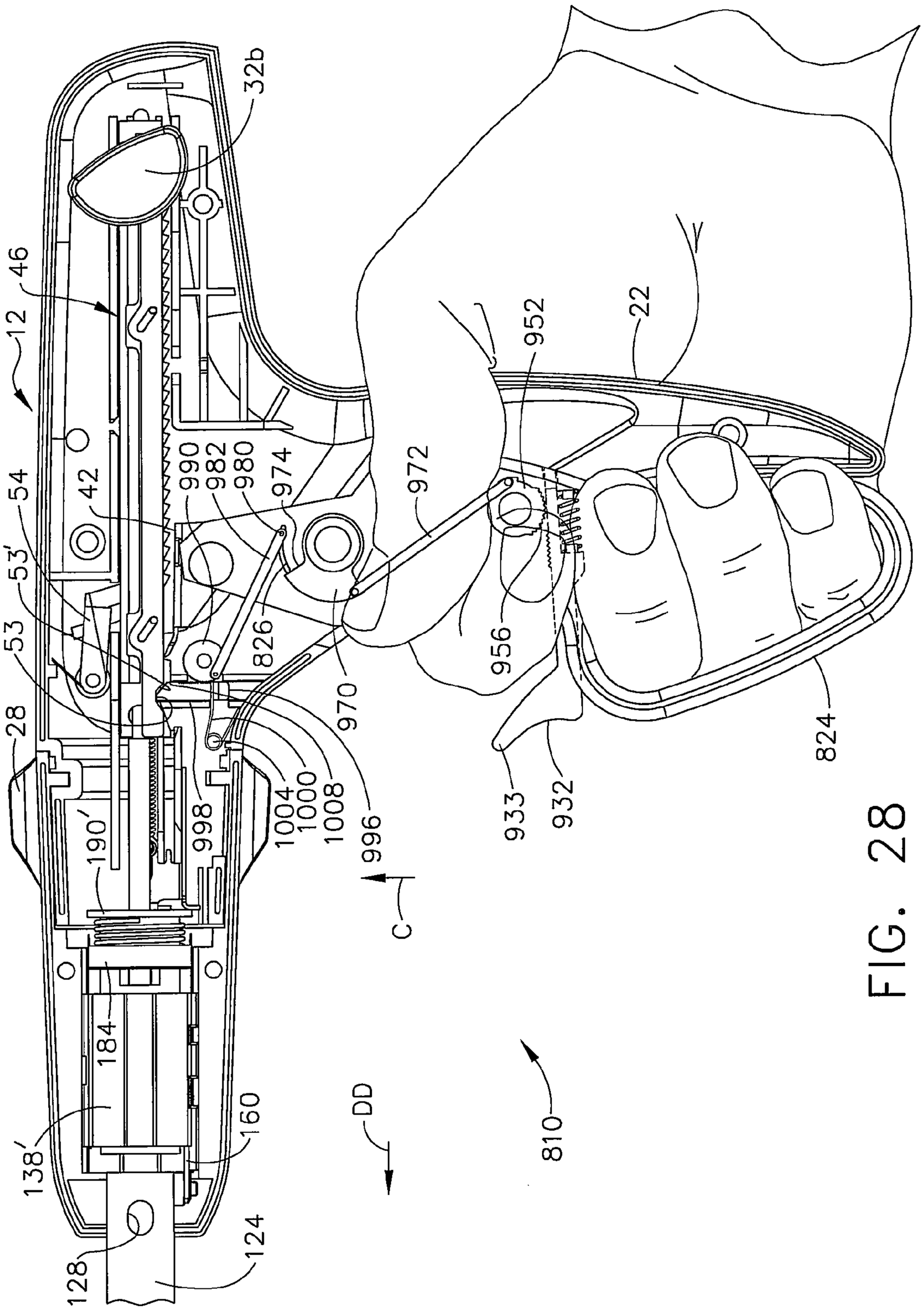
12
46
32b
54
42
53'
53
28
190'
184
138'
128
124
160
990
982
980
974
972
826
970
996
1004
1000
1008
998
C
DD
810
952
22
956
933
932
824

FIG. 28

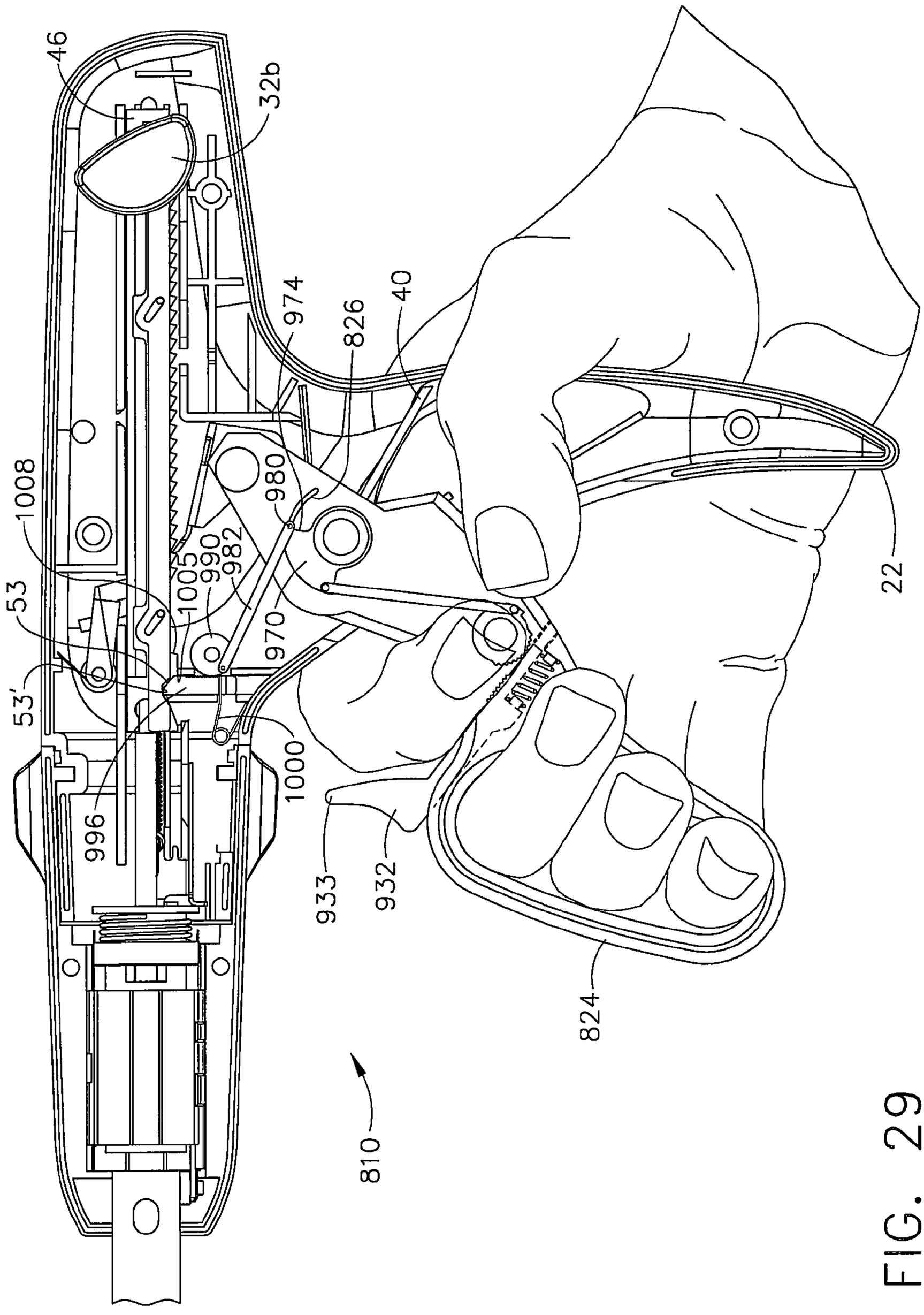
46
32b
974
826
40
1008
980
1005
990
982
53
970
53'
1000
996
933
932
824
22
810

FIG. 29

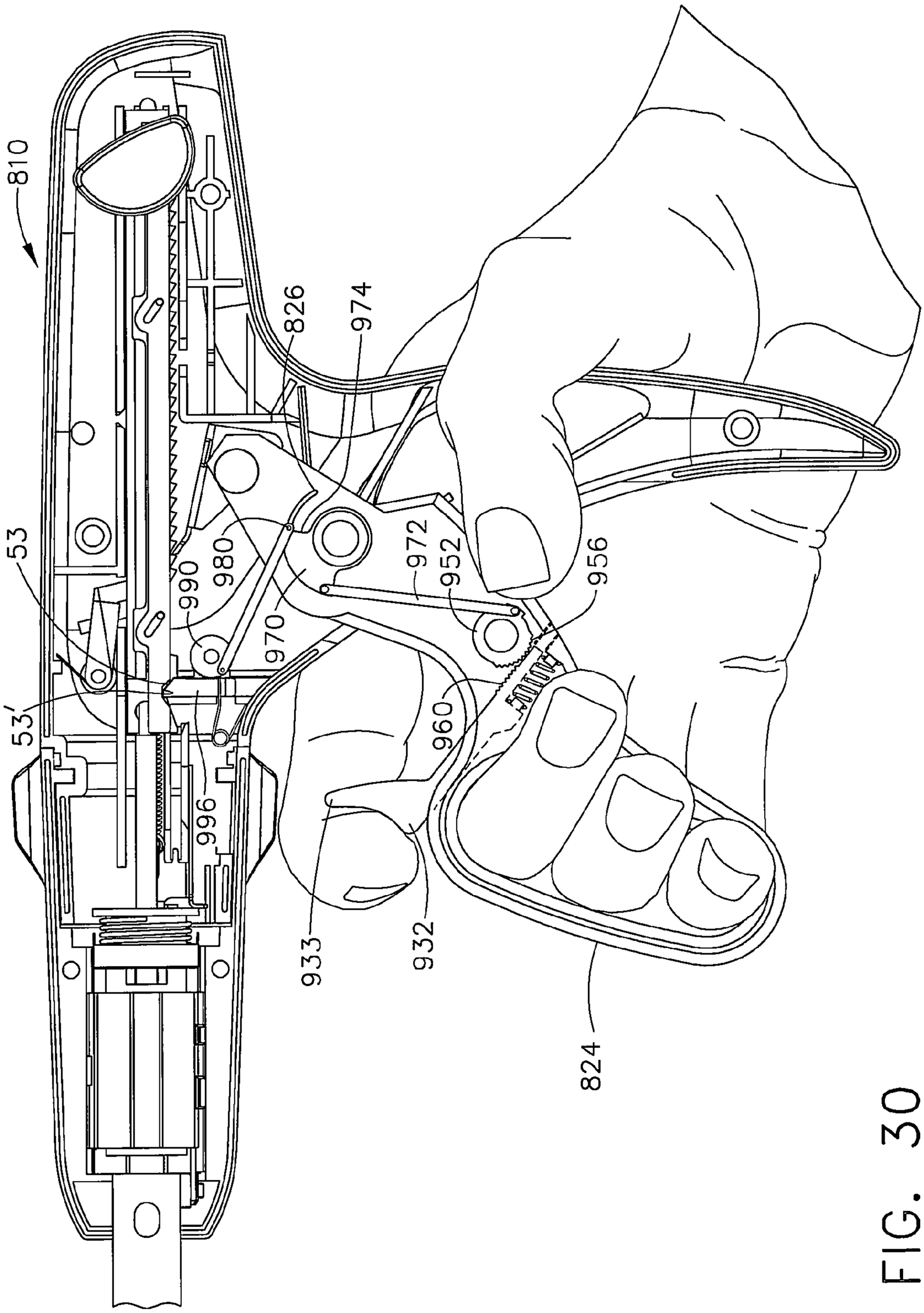

FIG. 30

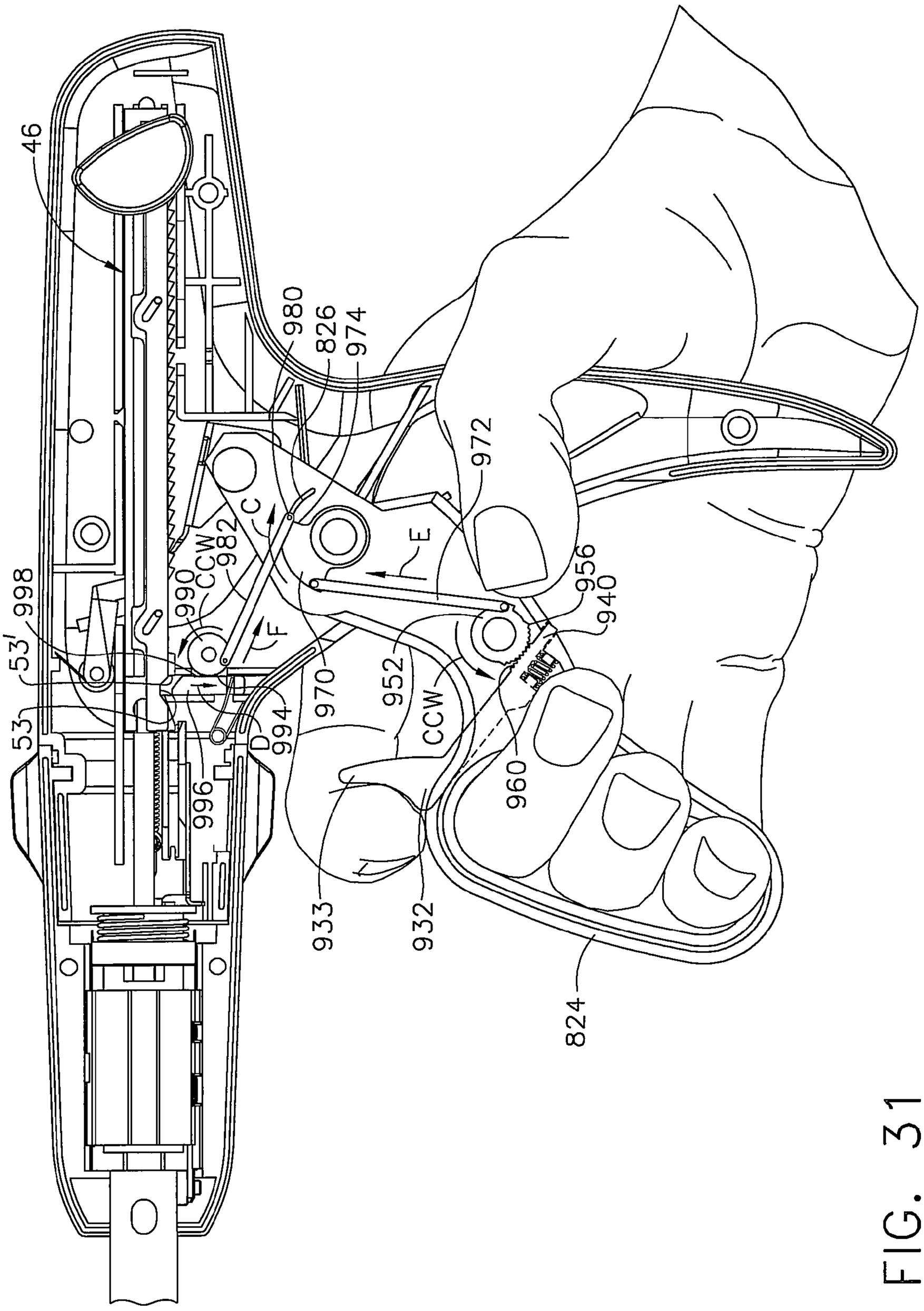
46
980
826
974
972
C
E
956
940
998
53'
990
CCW
982
F
952
CCW
970
53
D
994
996
960
933
932
824

FIG. 31

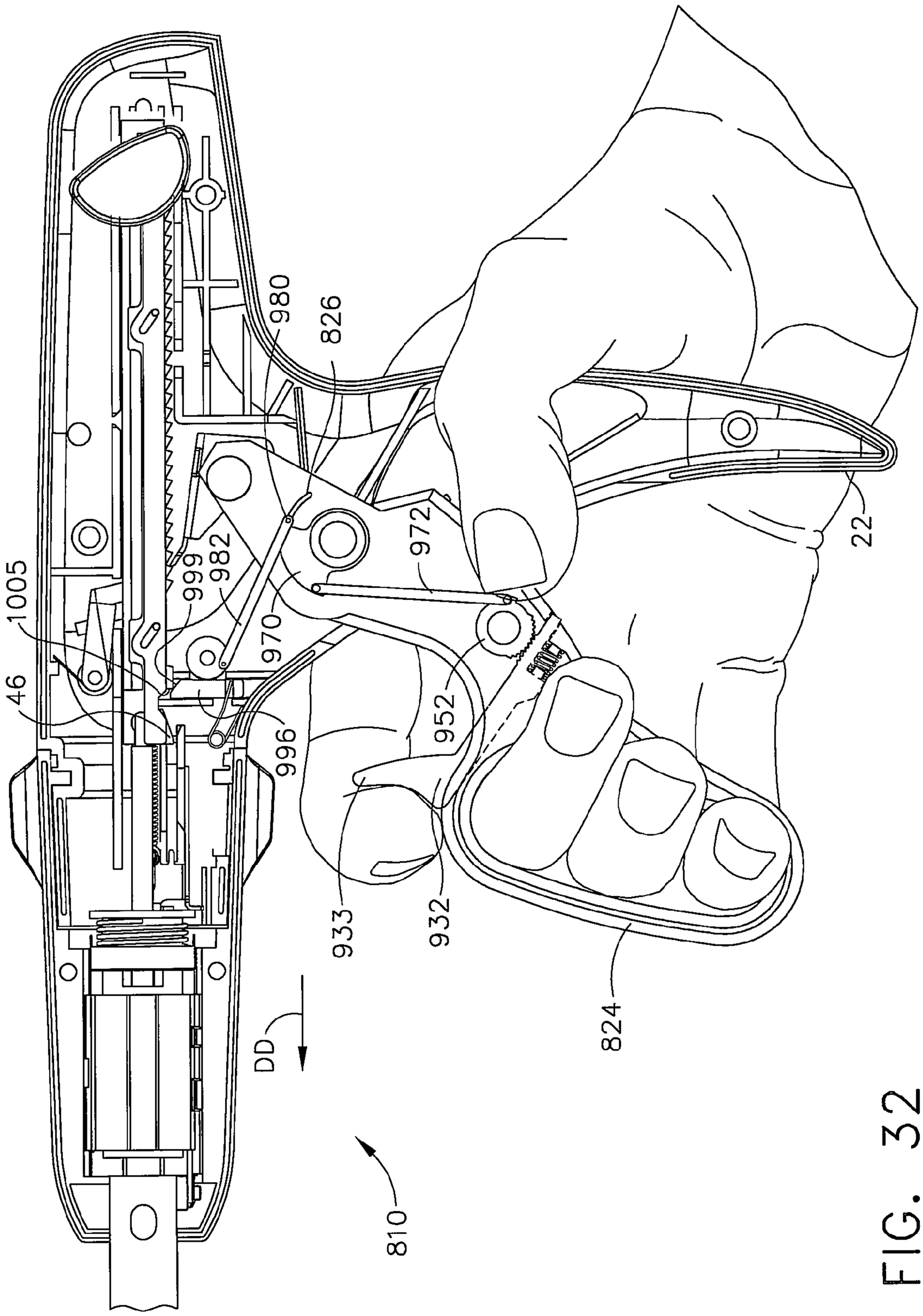

FIG. 32

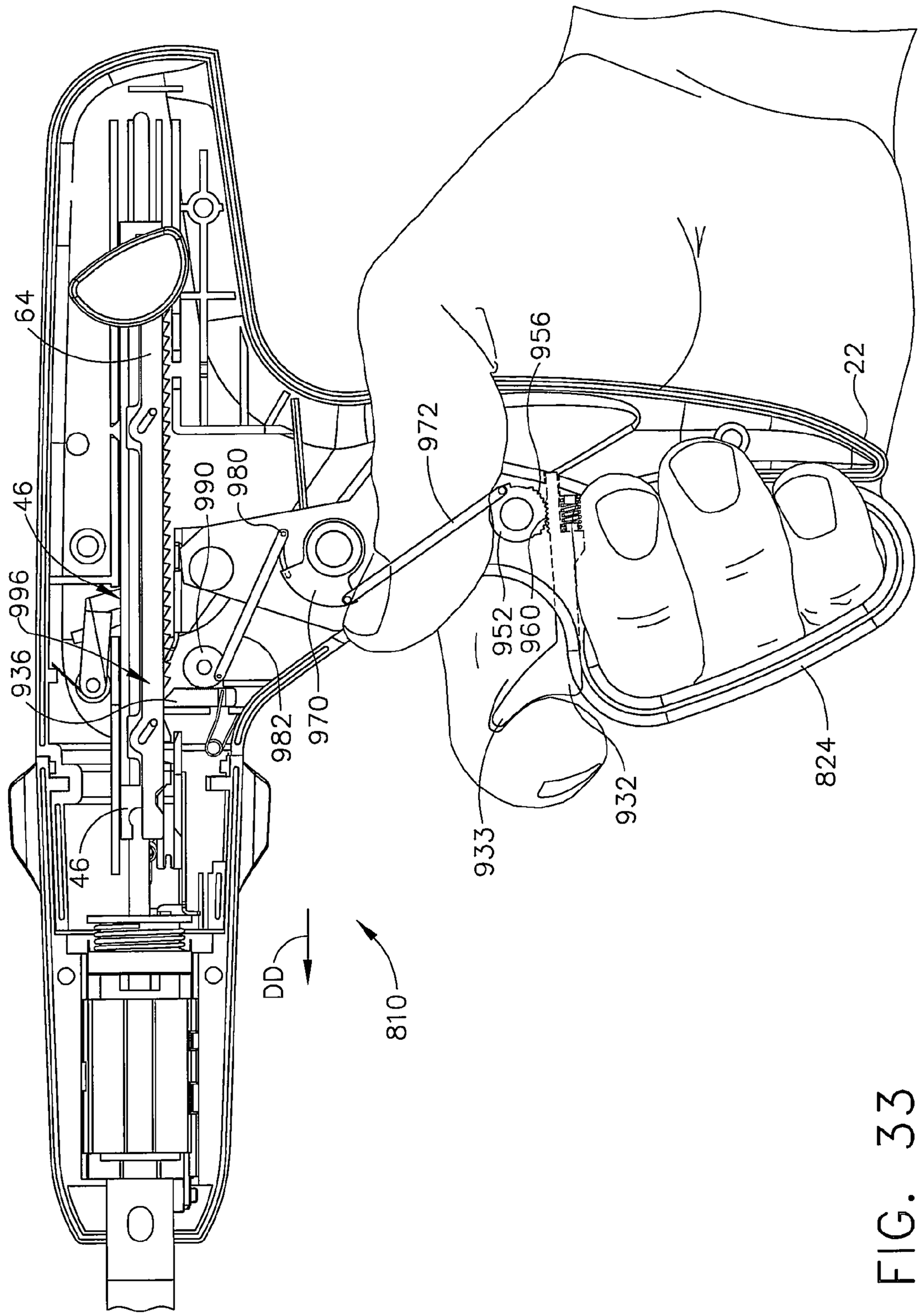
64
46
996
936
990
980
972
956
22
952
960
982
970
933
932
824
46
DD
810

FIG. 33

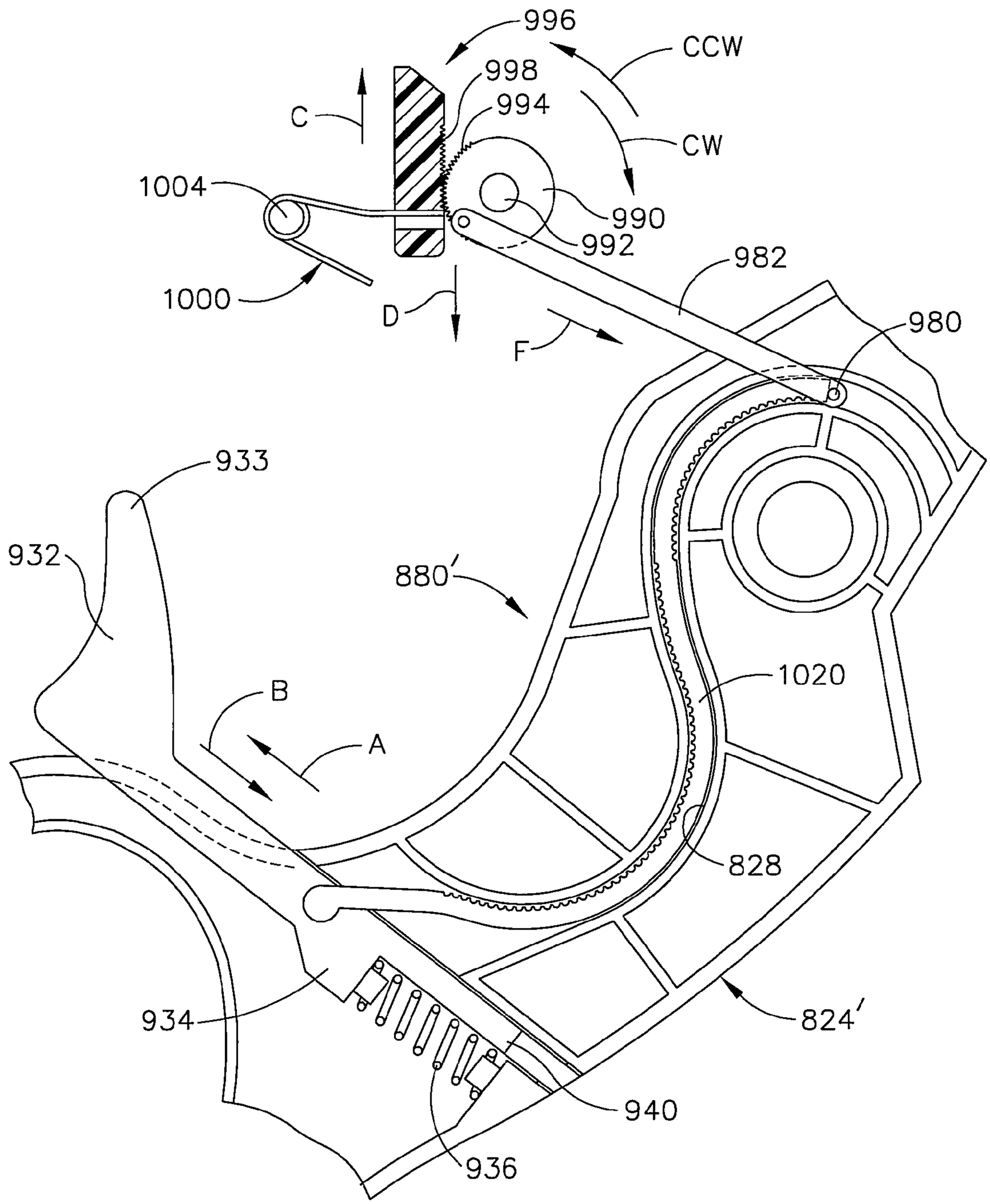
996
CCW
998
994
C
CW
1004
990
992
982
1000
D
980
F
933
932
880'
1020
B
A
828
934
824'
940
936

FIG. 34

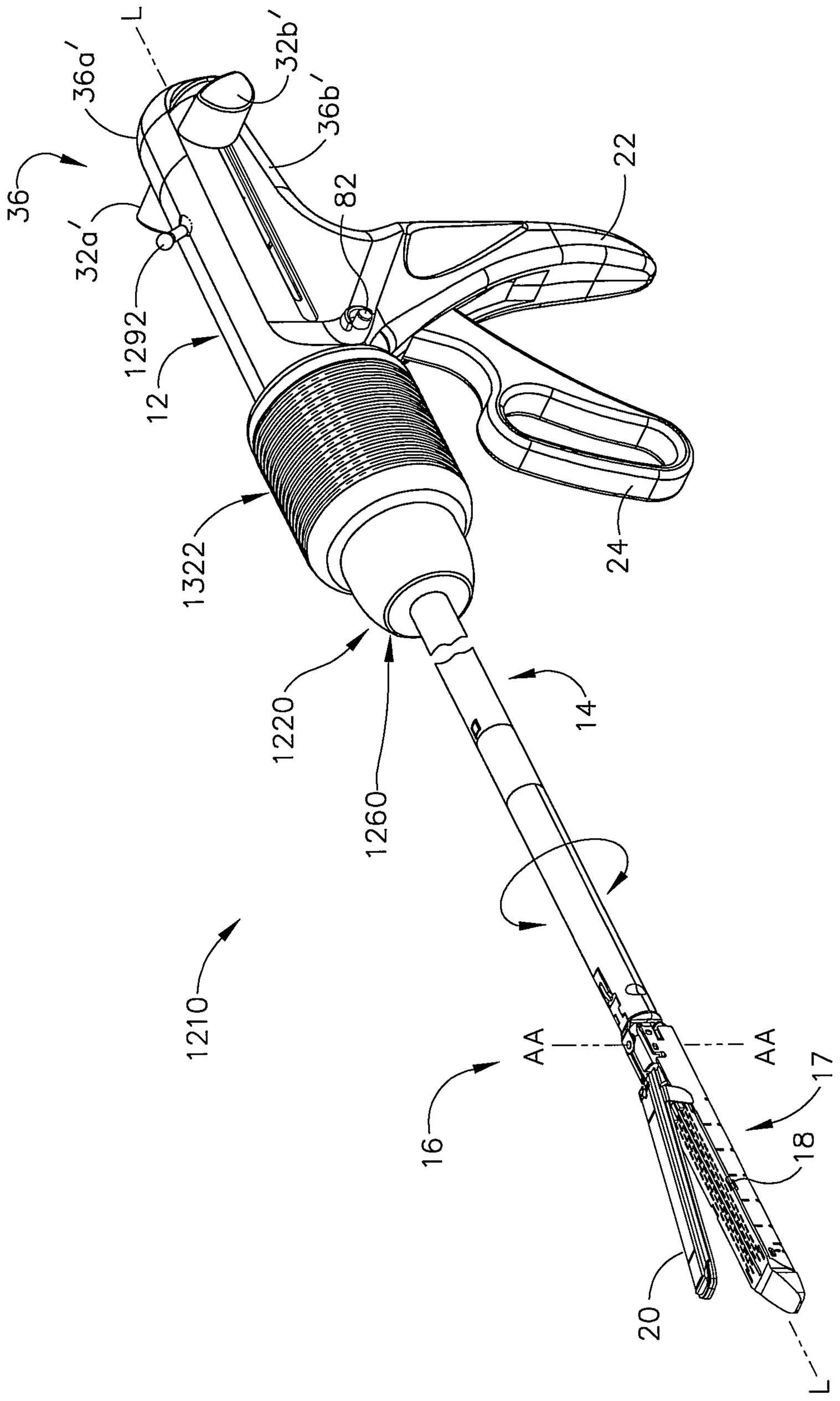
36
36a'
L
32b'
36b'
32a'
82
22
1292
12
1322
24
1220
14
1260
1210
AA
AA
16
17
18
20
L

FIG. 35

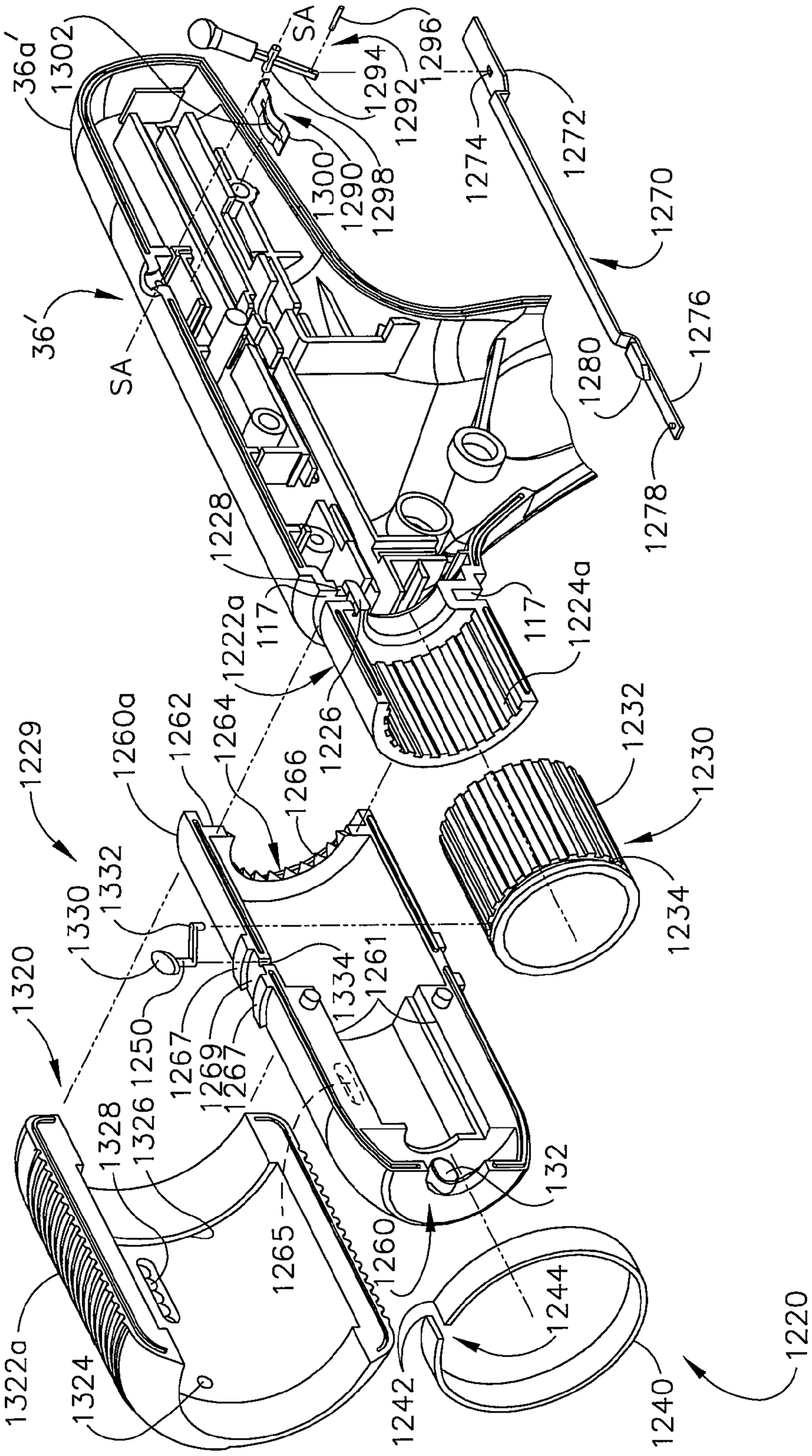
36a'
1302
SA
1294
1296
1292
1300
1290
1298
1274
1272
1270
36'
SA
1276
1280
1278
1228
1222a
117
117
1224a
1229
1260a
1262
1264
1266
1226
1232
1230
1234
1330
1332
1320
1334
1261
1267
1269
1267
1250
1328
1326
132
1265
1260
1322a
1324
1242
1244
1240
1220

FIG. 36

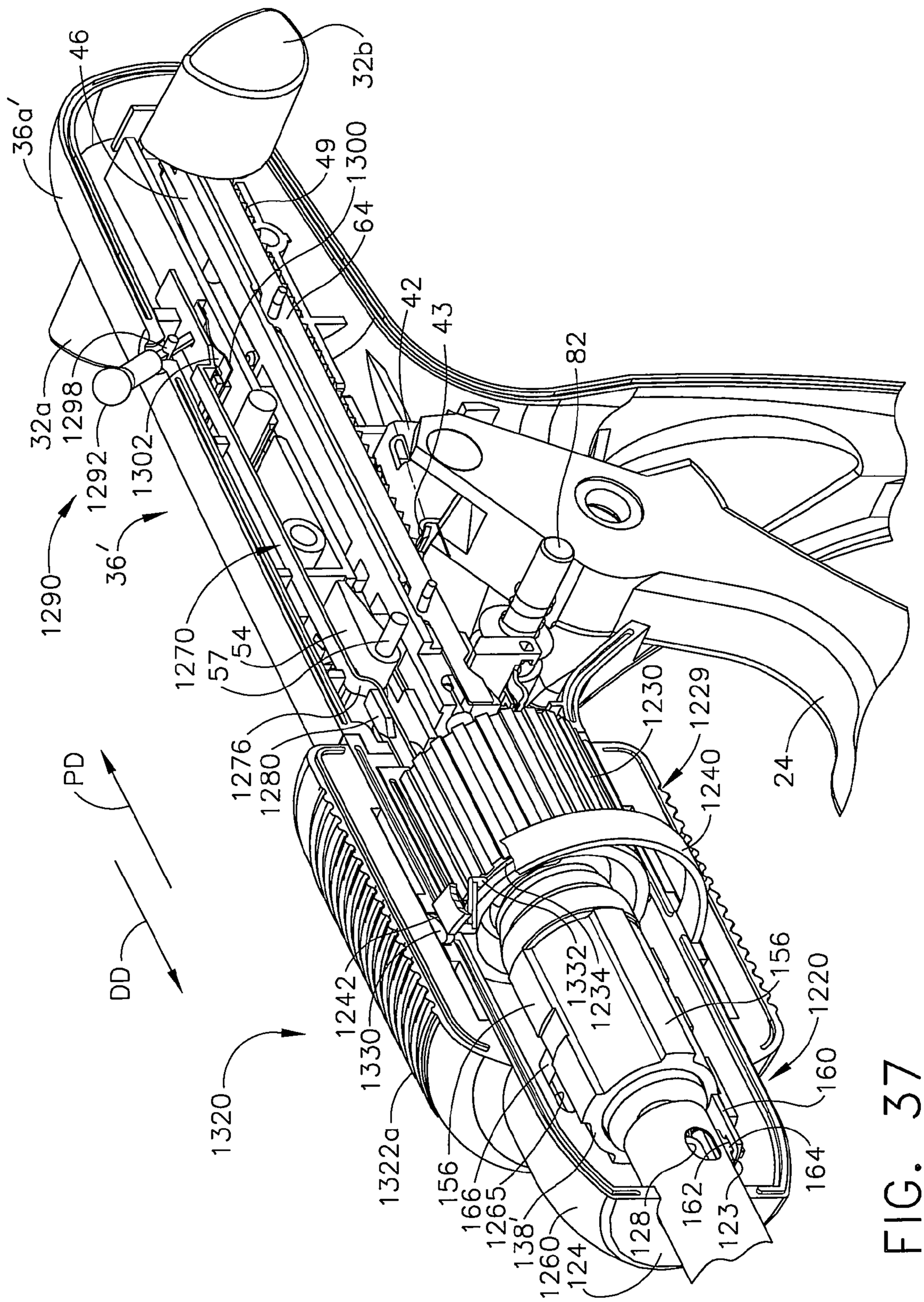
36a'
46
32b
49
1300
64
42
43
82
32a
1298
1292
1302
1290
36'
1270
54
57
1276
1280
PD
DD
1230
1229
1240
24
1242
1330
1332
1234
156
1220
160
164
1320
1322a
156
166
1265
138'
1260
124
128
162
123

FIG. 37

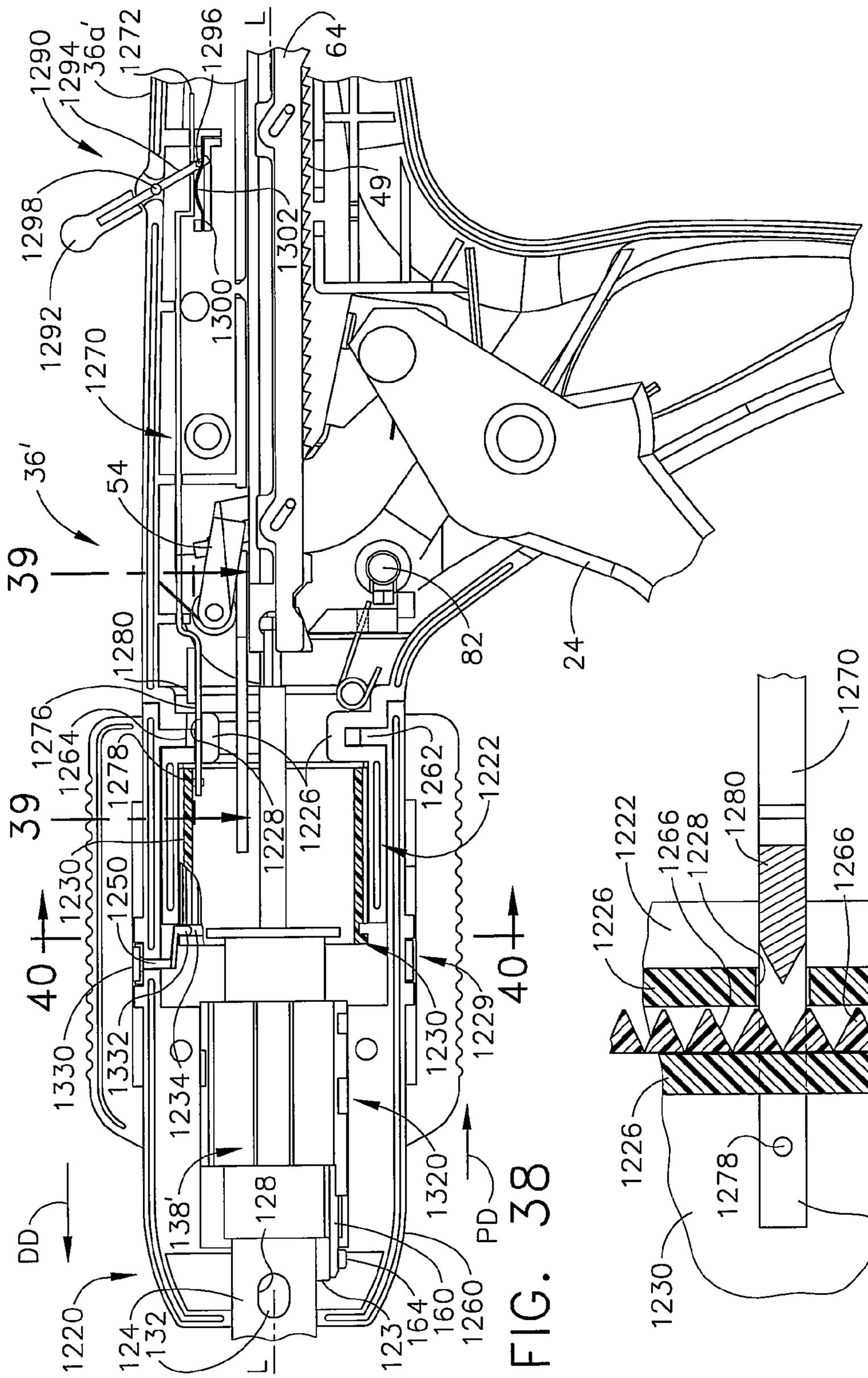
1290
1294
36a'
1272
1296
L
64
1298
1292
1270
1300
1302
49
36'
54
39
39
1280
82
24
1276
1264
1278
1228
1226
1262
1222
1230
1250
40
40
1330
1332
1234
1229
1230
1320
138'
128
DD
PD
1220
124
132
L
123
164
160
1260

FIG. 38

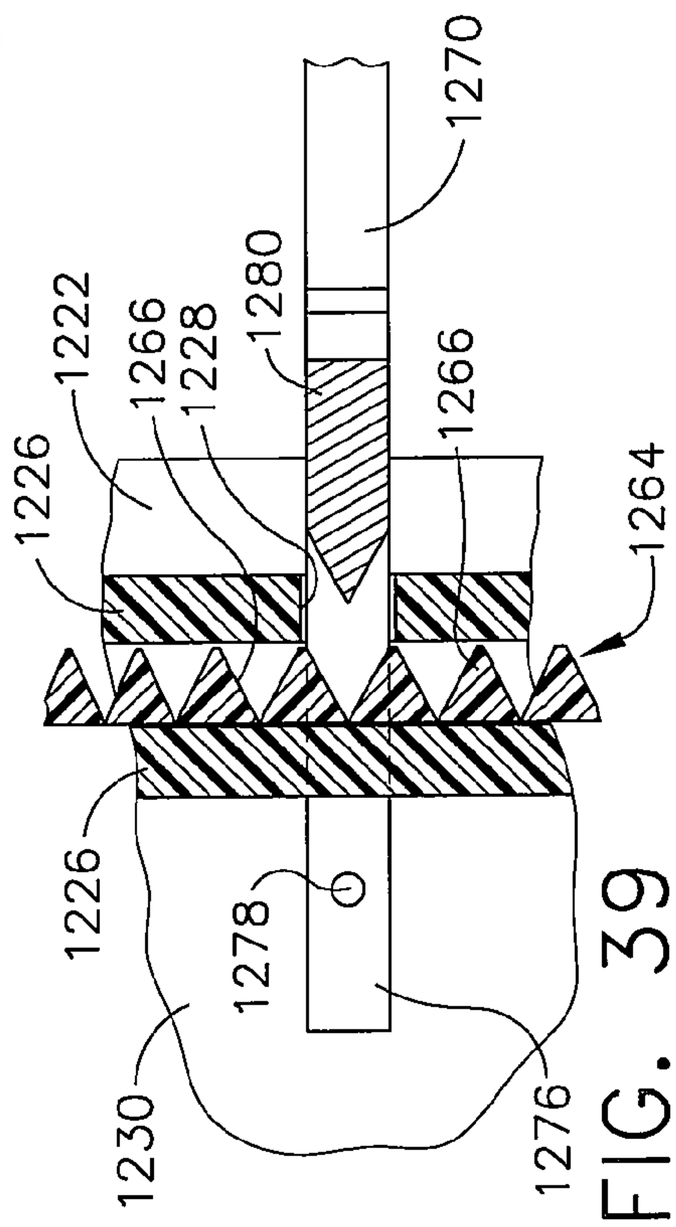
1270
1222
1266
1228
1280
1266
1226
1264
1226
1278
1230
1276

FIG. 39

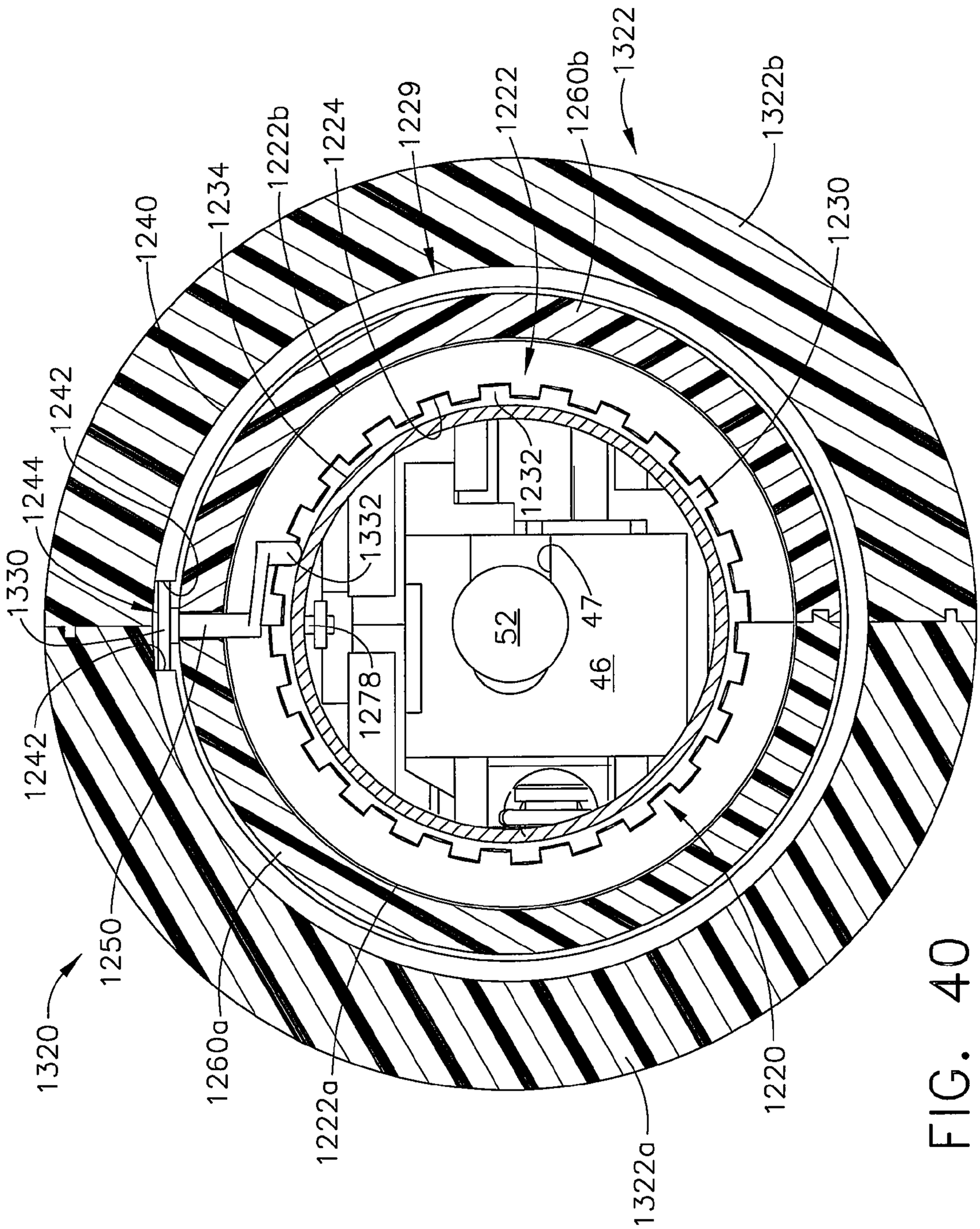
1322
1322b
1260b
1222
1229
1224
1222b
1234
1240
1230
1242
1244
1330
1242
1332
1232
47
52
46
1278
1250
1320
1260a
1222a
1322a
1220

FIG. 40

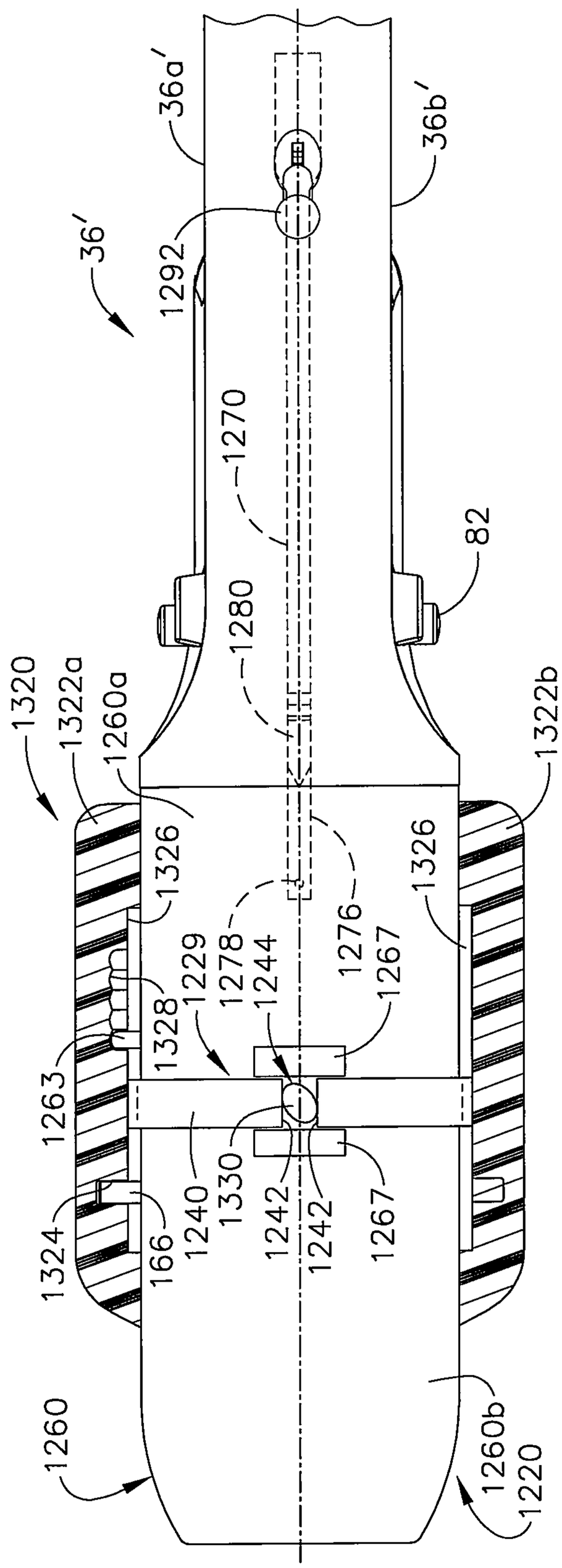
36'
36a'
36b'
1292
1270
1280
82
1320
1322a
1260a
1322b
1326
1326
1278
1229
1244
1276
1267
1328
1263
1330
1240
1242
1242
1267
1324
166
1260
1260b
1220

FIG. 41

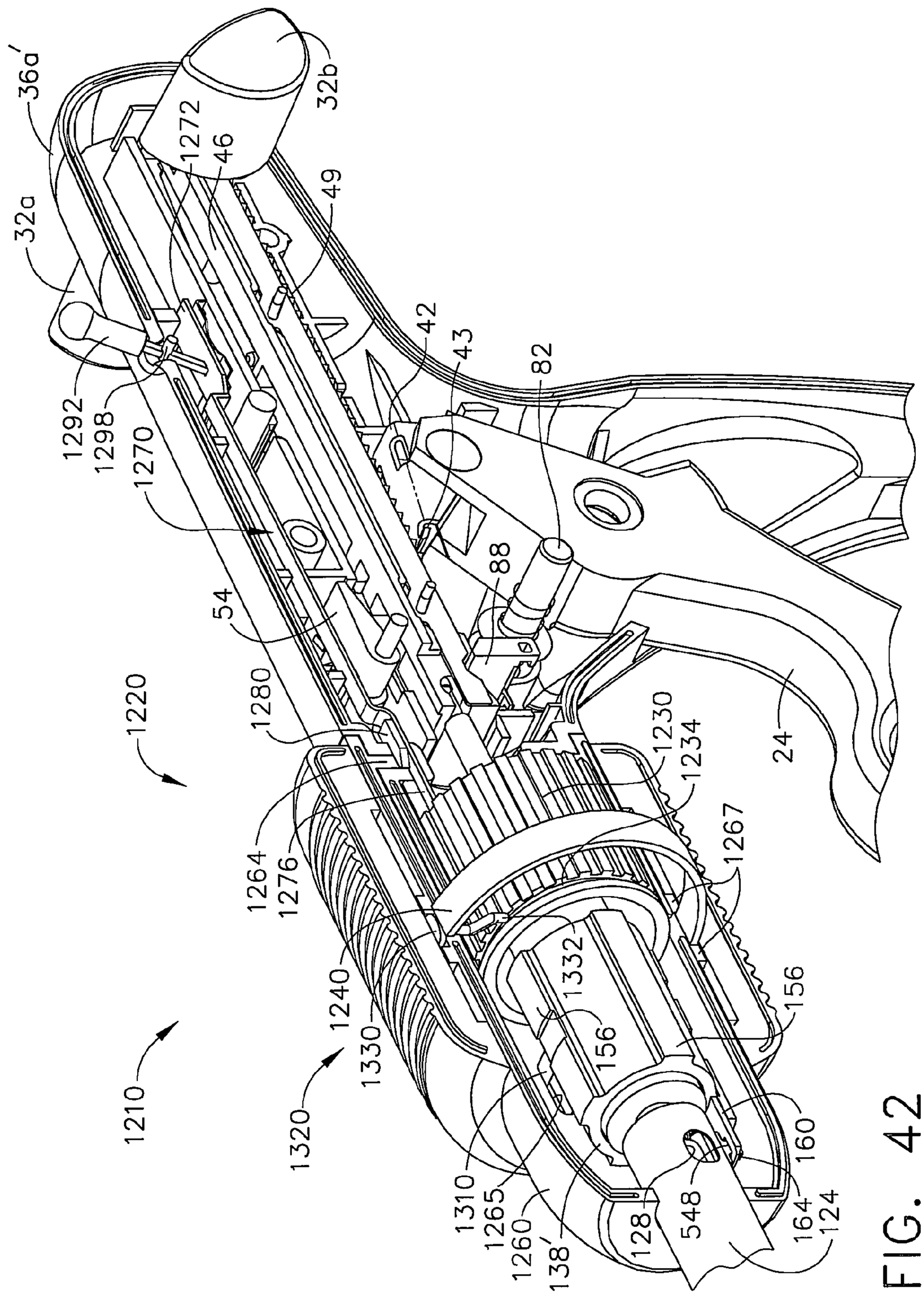
36a'
32a
1292
1298
1270
1272
46
49
32b
42
43
82
88
54
1280
1220
1264
1276
1240
1330
1320
1210
1310
1265
1260
138'
128
548
164
124
160
156
1332
1267
1234
1230
24
56

FIG. 42

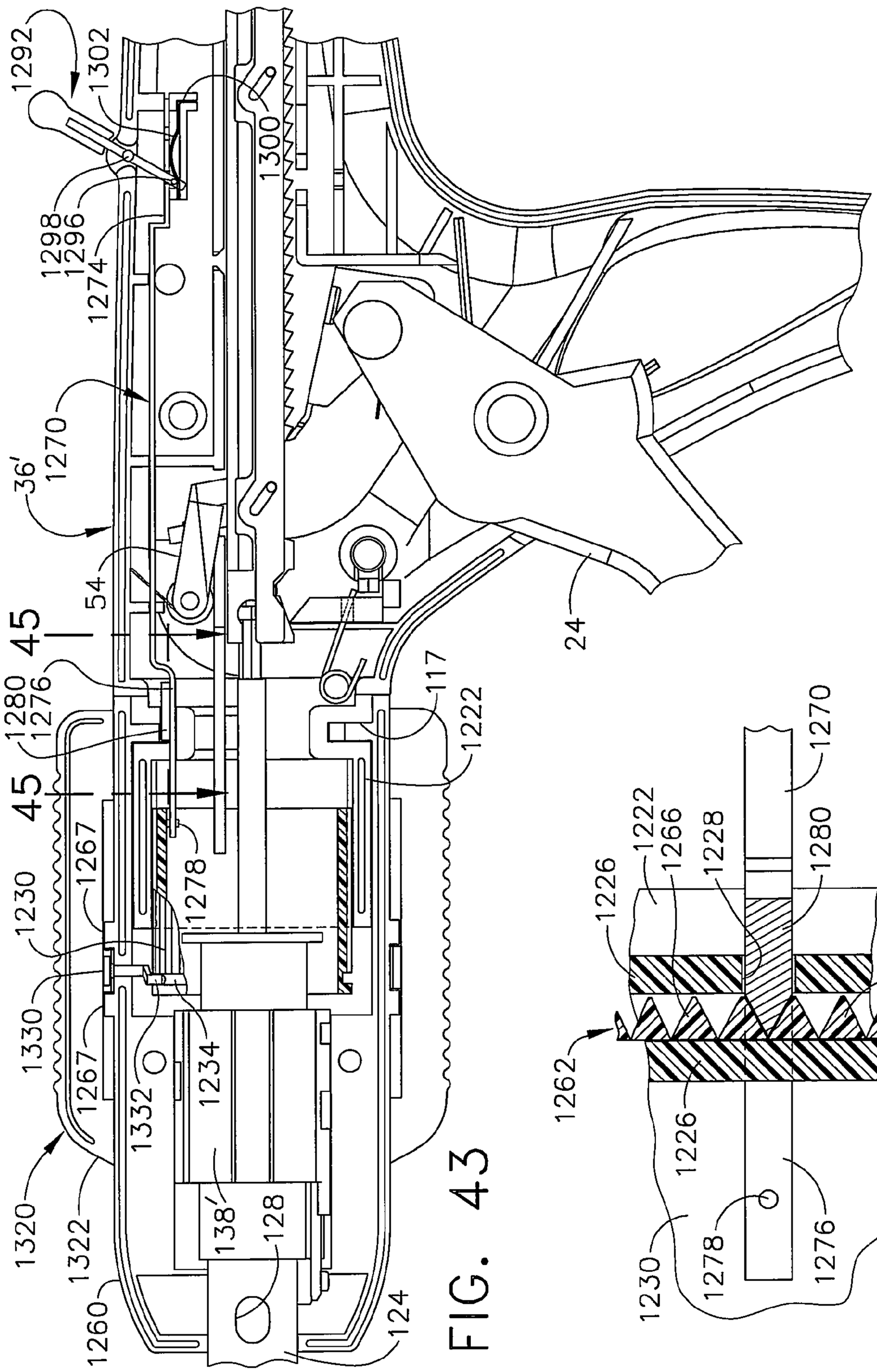
1292
1302
1300
1298
1296
1274
1270
36'
54
45
45
1280
1276
117
1222
24
1267
1278
1230
1330
1267
1332
1234
1320
1322
138'
128
1260
124
1270
1222
1266
1228
1280
1226
1266
1264
1262
1226
1230
1278
1276

FIG. 43

FIG. 44

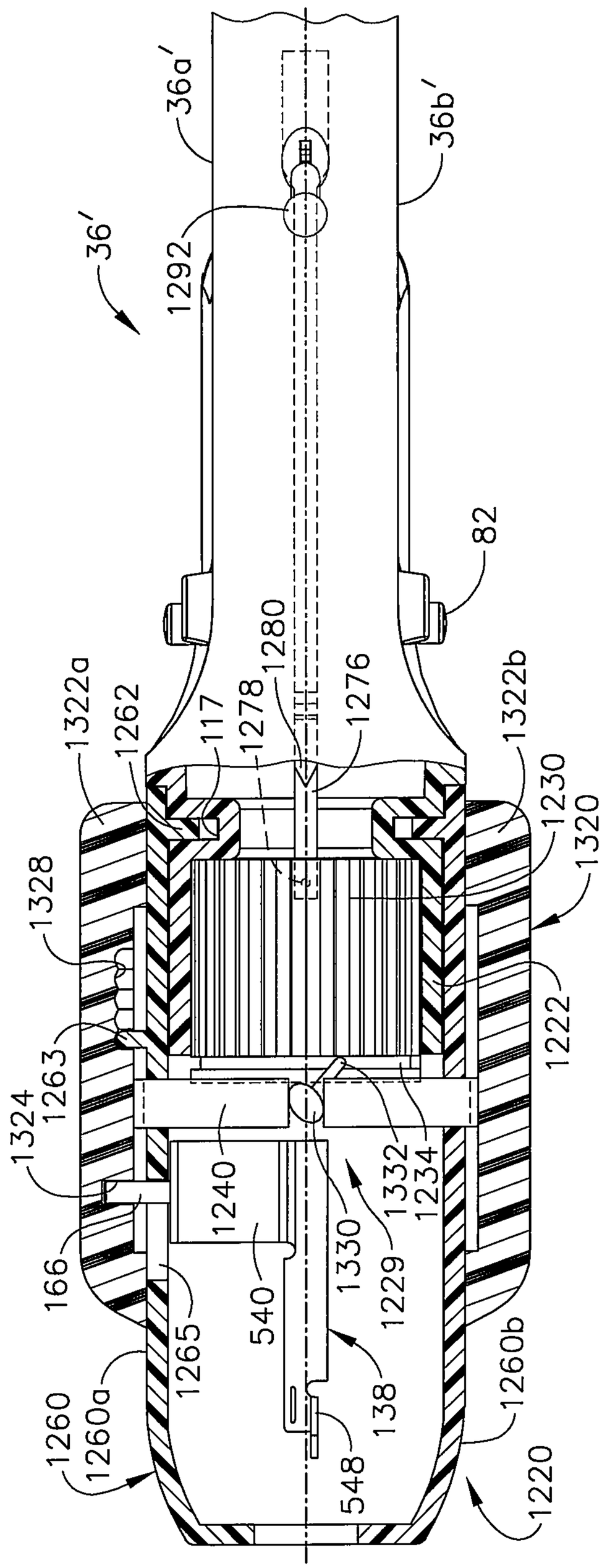
36'
36a'
36b'
1292
82
1280
1276
1278
117
1262
1322a
1322b
1230
1320
1328
1222
1263
1324
1240
1332
1234
1330
1229
166
540
1265
138
1260
1260a
1260b
548
1220

FIG. 45

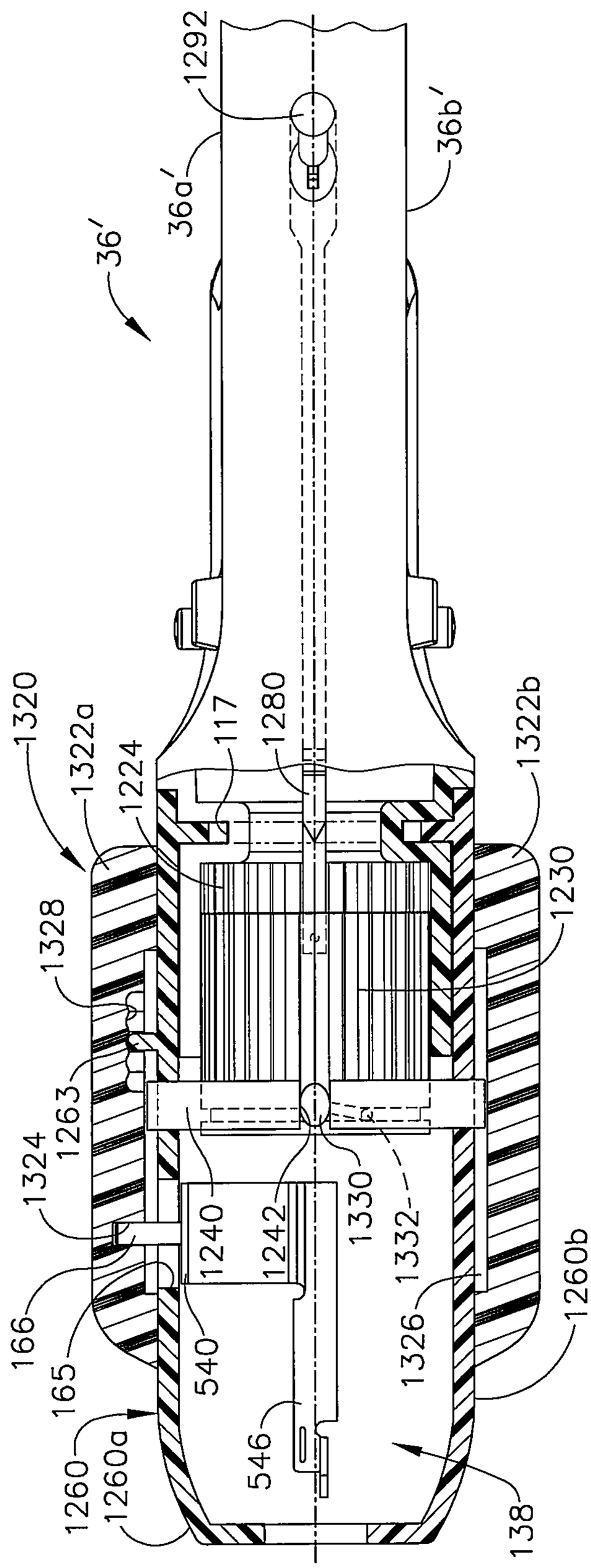
36'
36a'
1292
36b'
1320
1322a
1224
117
1280
1322b
1230
1328
1263
1324
1240
1242
1330
1332
1326
1260b
166
165
540
546
1260
1260a
138

FIG. 46

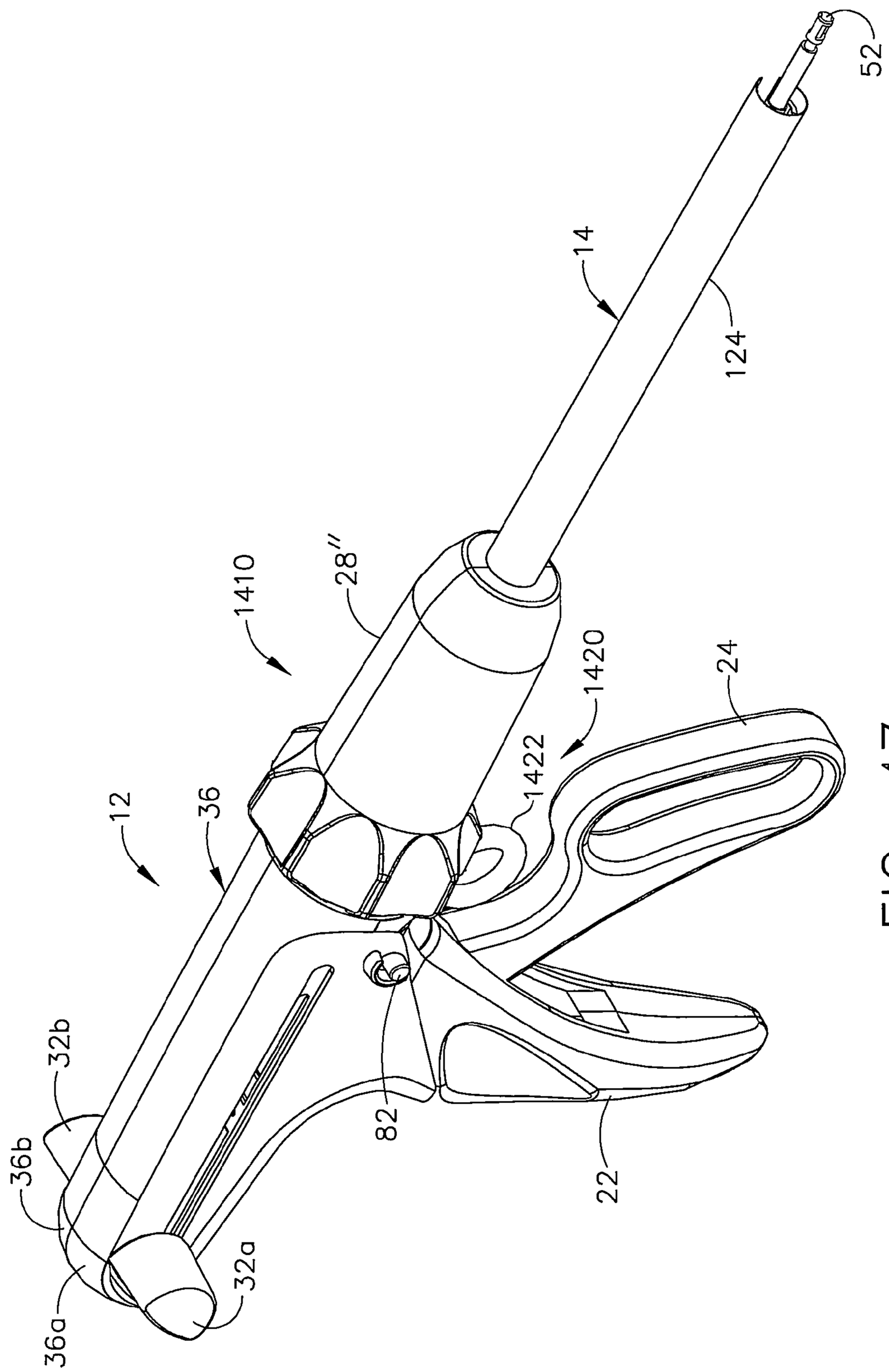

FIG. 47

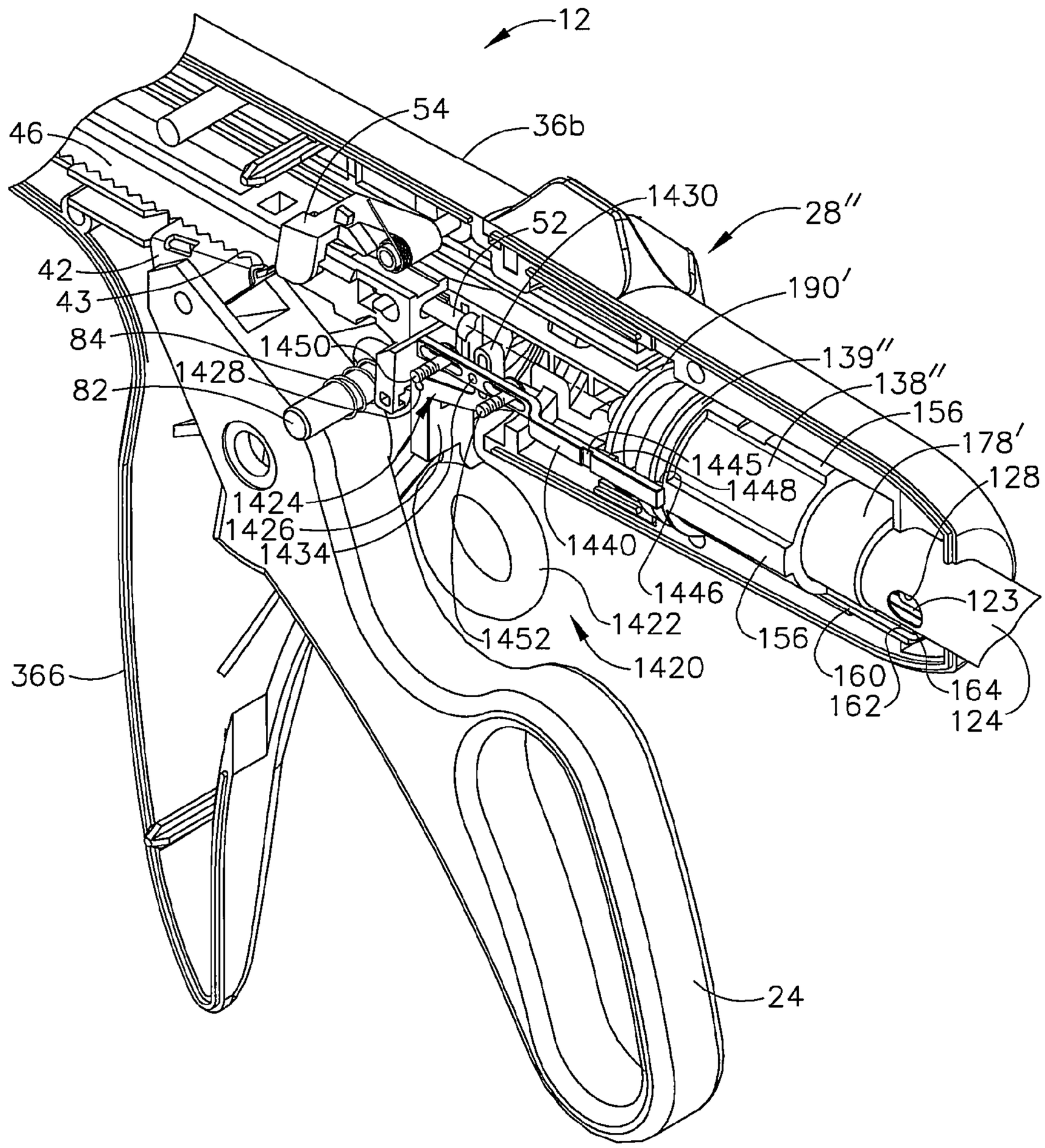
12
54
36b
46
1430
28″
52
42
43
190′
84
1450
139″
1428
138″
82
156
178′
1445
128
1448
1424
1426
1434
1440
1446
123
1422
1452
156
1420
160
162
164
124
366
24

FIG. 48

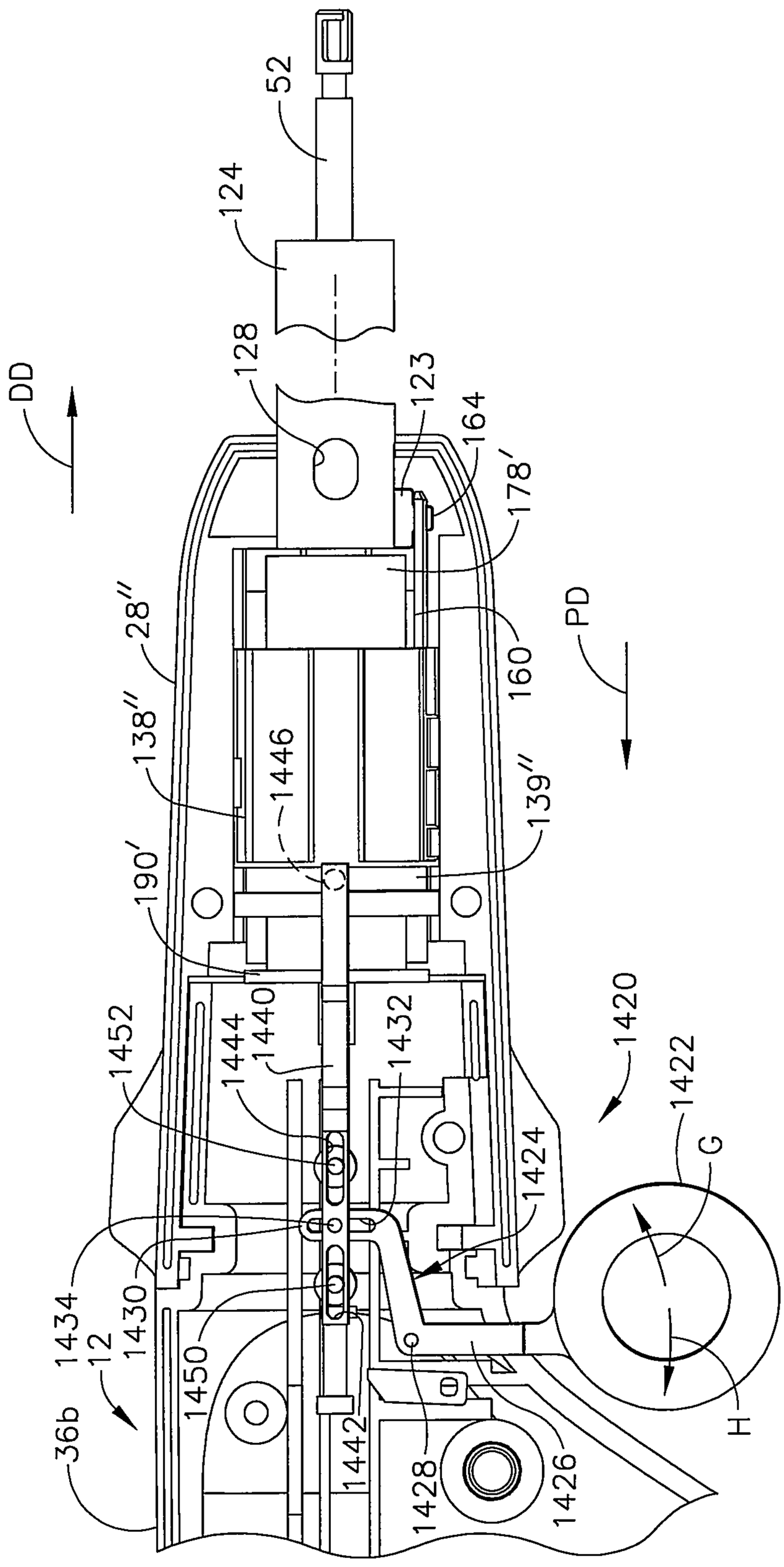
52
124
128
DD
123
164
178′
28″
138″
1446
160
PD
139″
190′
1452
1444
1440
1432
1420
1422
G
1424
1434
12
1430
1450
36b
1442
1428
1426
H

FIG. 49

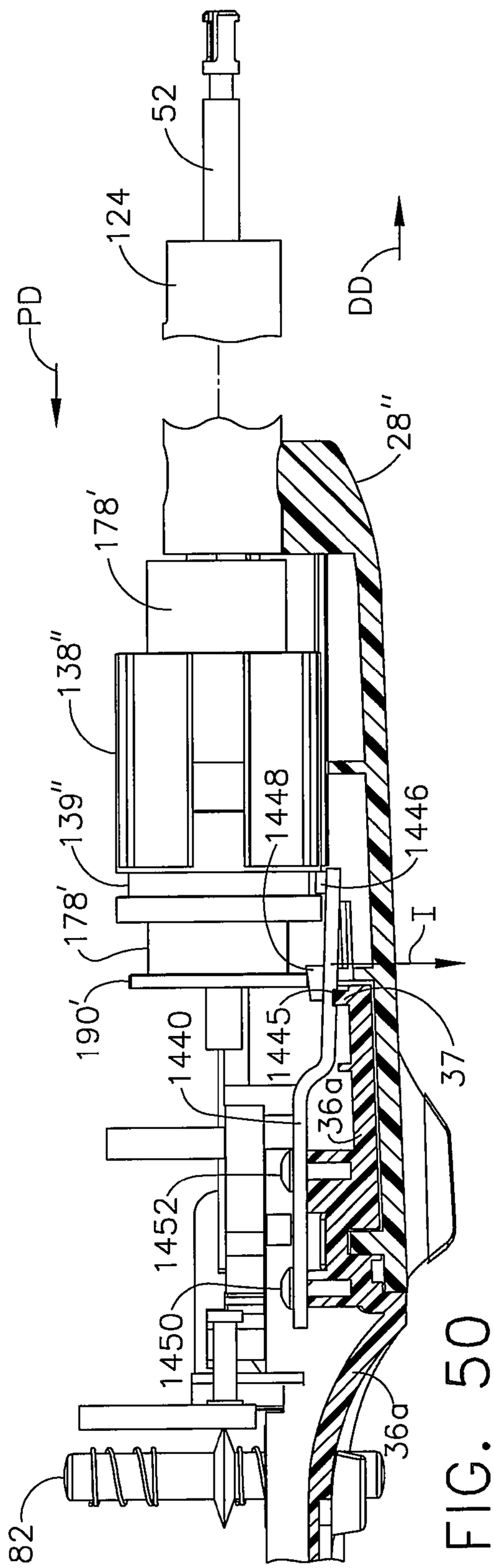
PD
124
52
DD
28''
178'
138''
139''
178'
190'
1448
1446
I
1440
1445
36a
37
1452
1450
82
36a

FIG. 50

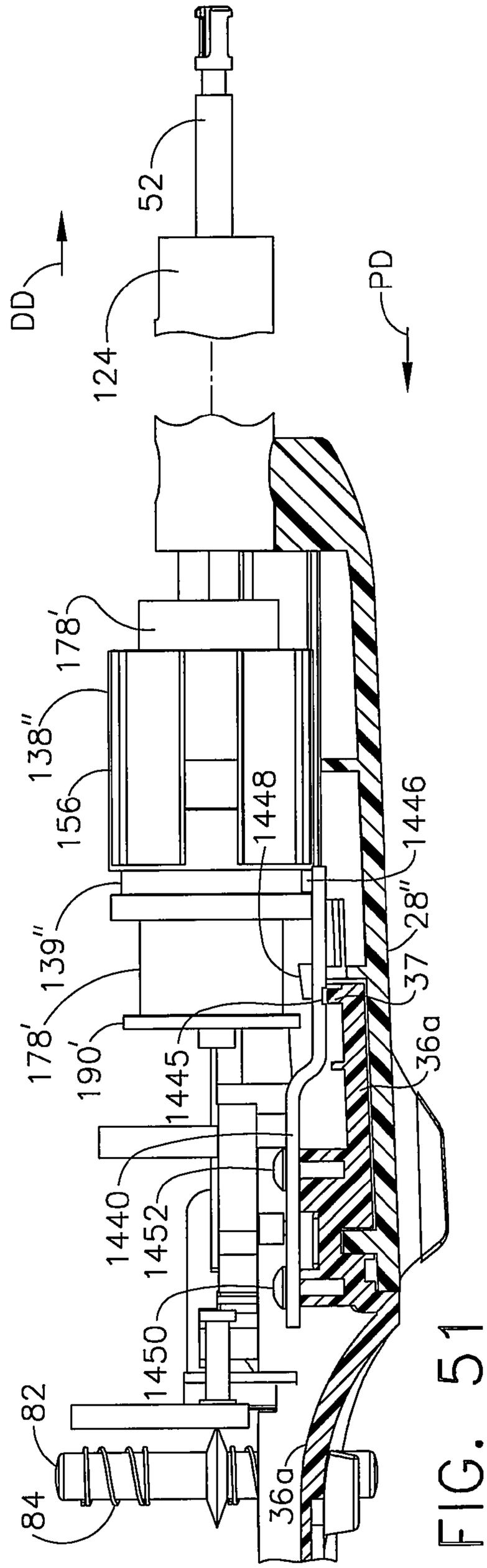
DD
52
PD
124
178'
138''
156
1448
1446
139''
28''
37
178'
190'
1445
36a
1440
1452
1450
82
84
36a

FIG. 51

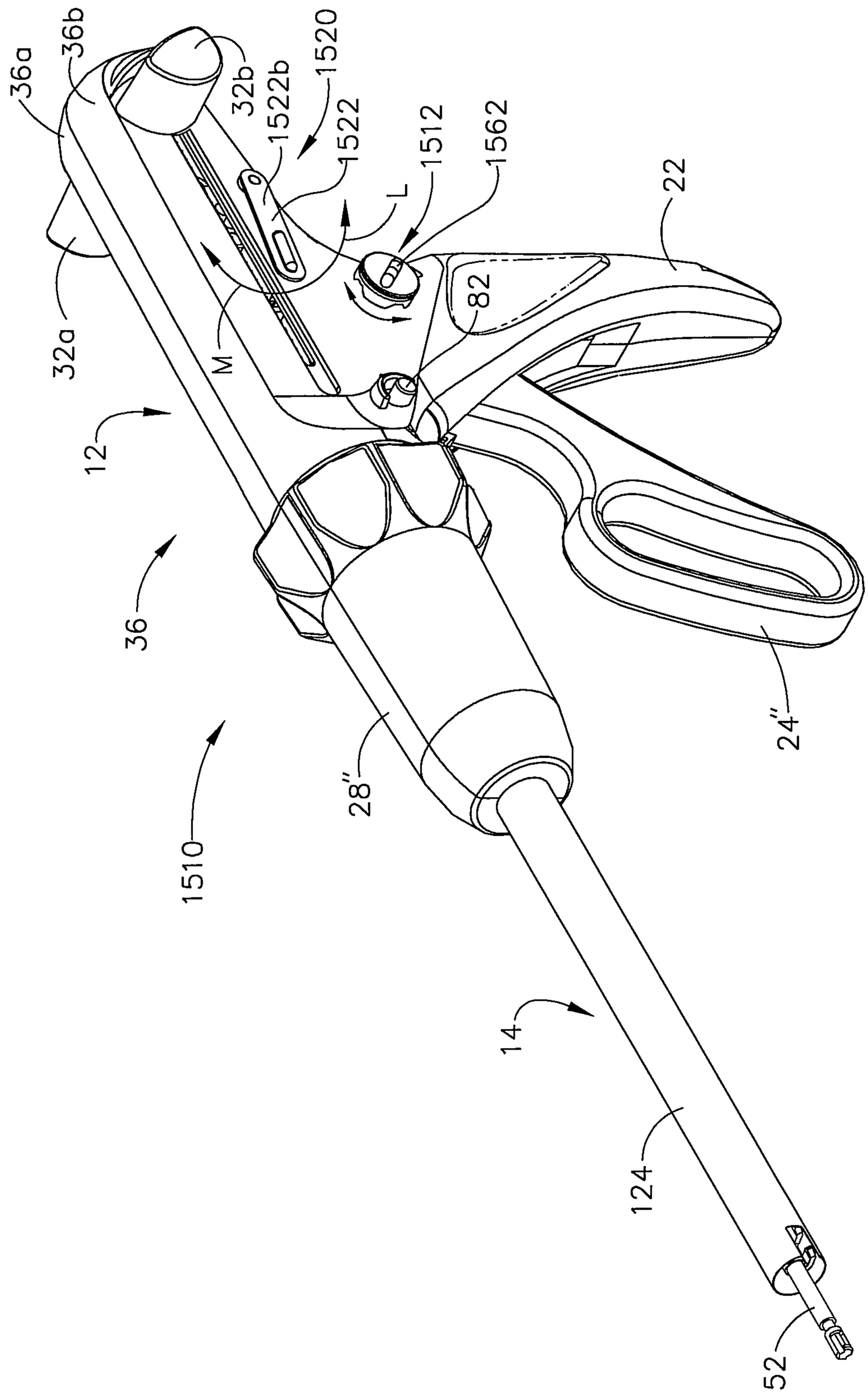
36a
36b
32b
1520
1522b
1522
1512
1562
22
L
M
82
32a
12
36
1510
28"
24"
14
124
52

FIG. 52

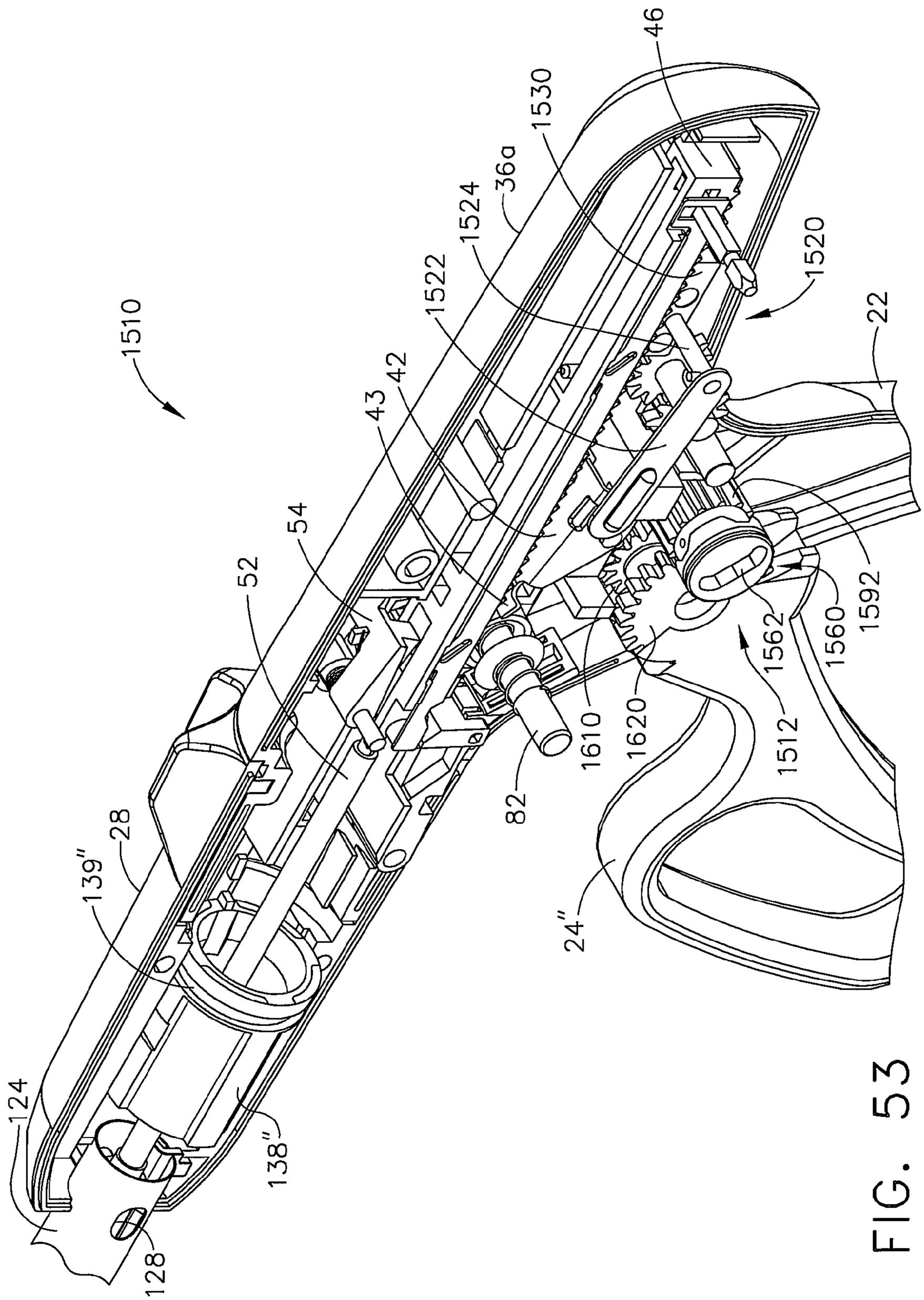
1510
46
1530
36a
1524
1522
1520
22
42
43
54
52
1592
1560
1562
1512
1620
1610
82
24"
28
139"
124
138"
128

FIG. 53

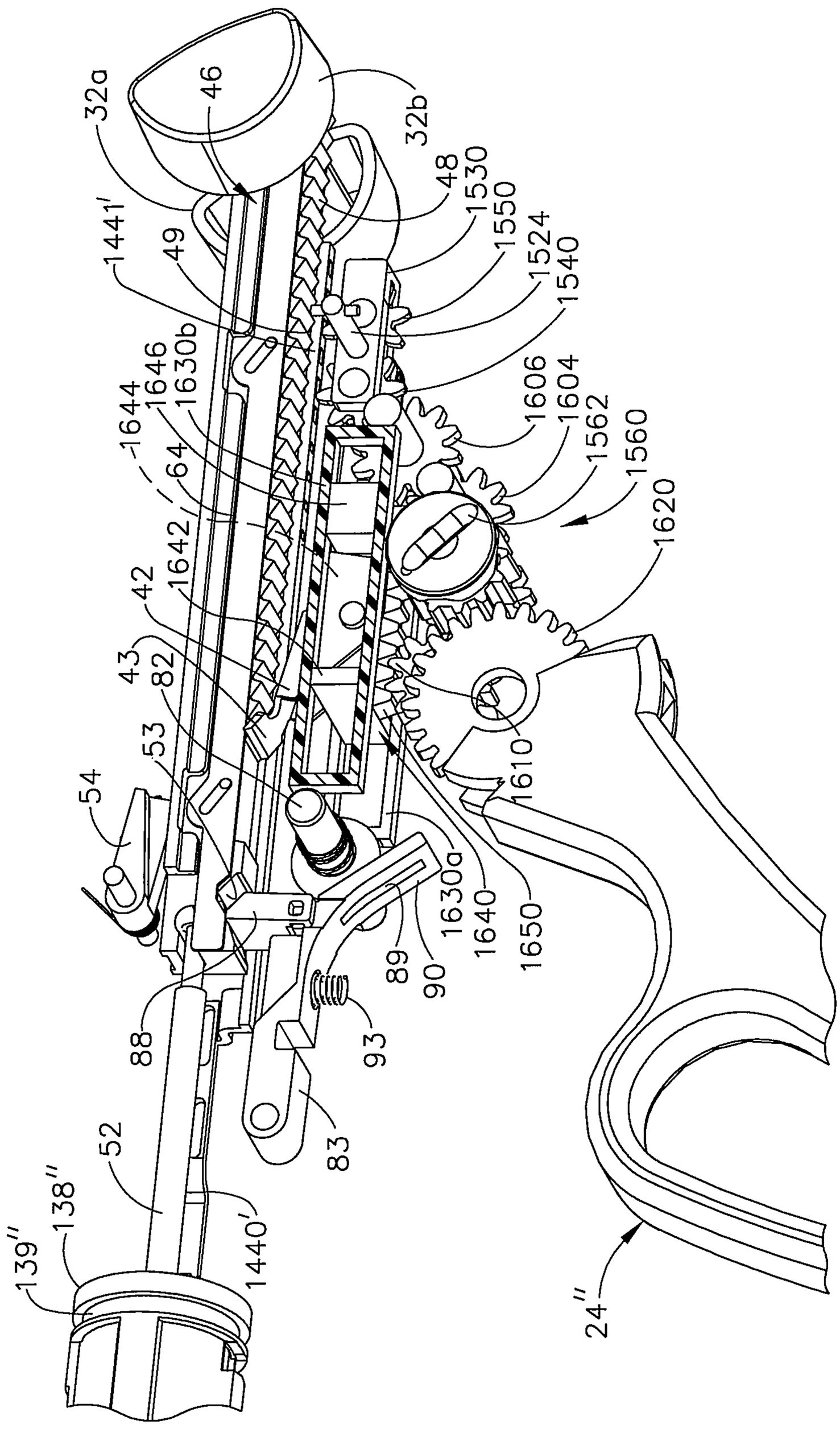
32a
46
32b
48
1530
1550
1524
1540
1441'
49
1606
1604
1562
1560
1620
1644
1646
1630b
64
1642
42
43
82
53
54
1610
1630a
1640
1650
89
90
88
93
83
52
138''
139''
1440'
24''

FIG. 54

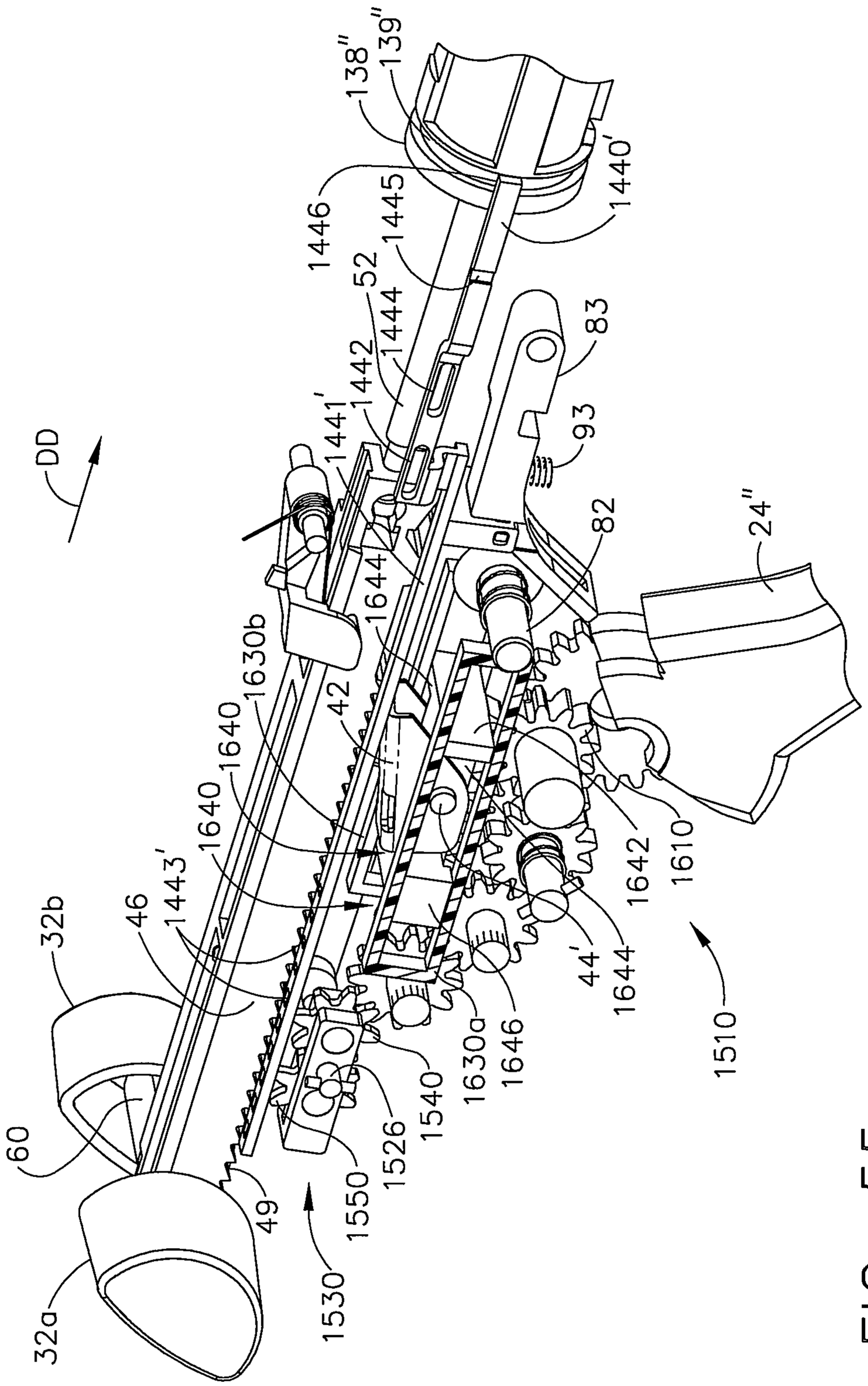
DD
138"
139"
1446
1445
52
1444
1442
1441'
1440'
83
93
82
24"
1644
1630b
42
1640
1640
1443'
46
32b
60
32a
49
1530
1550
1526
1540
1630a
1646
44'
1644
1642
1610
1510

FIG. 55

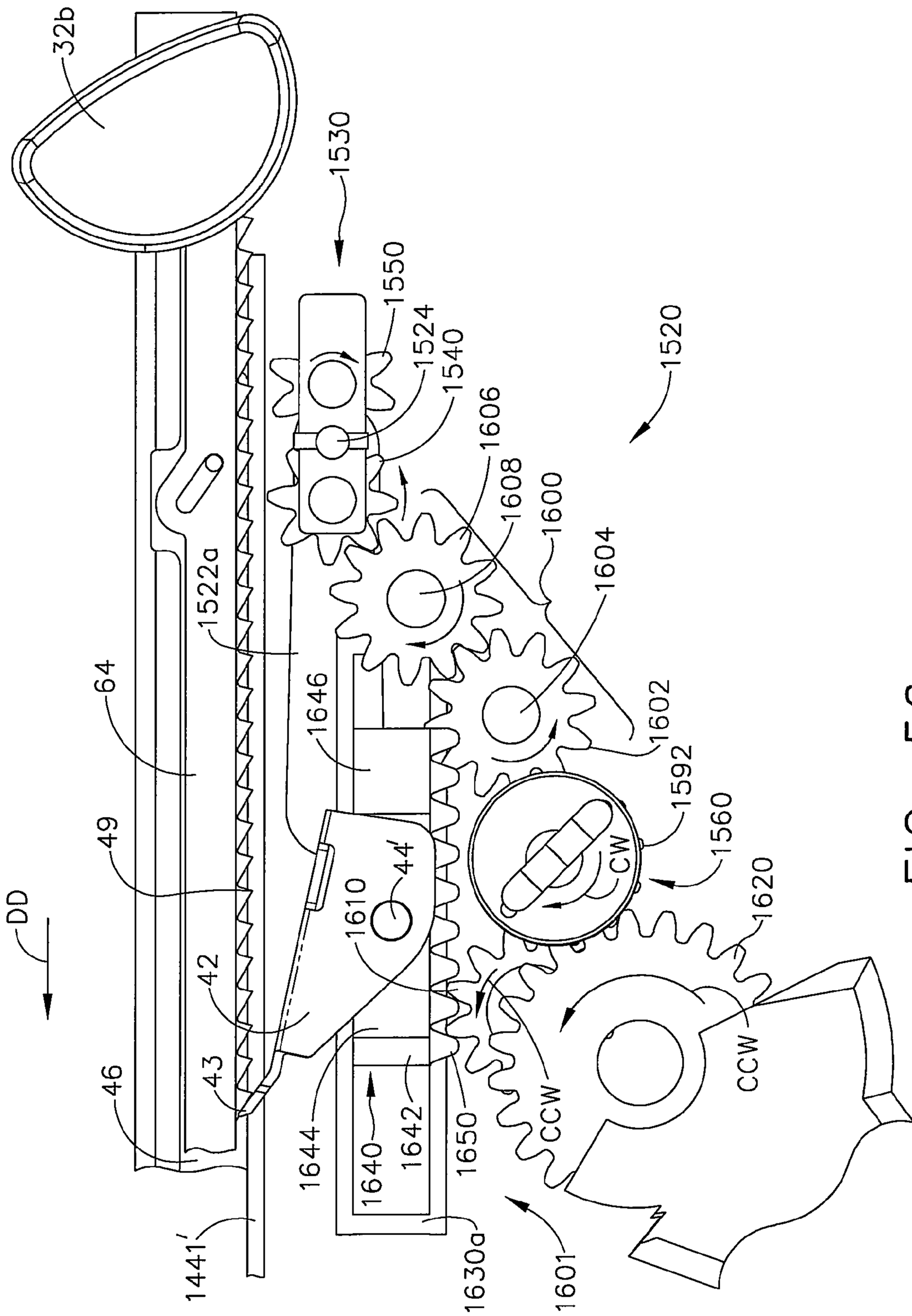
32b
1530
1550
1524
1540
1520
1606
1608
1600
1604
1522a
64
1646
1602
1592
1560
49
44'
CW
1620
DD
1610
42
43
46
CCW
CCW
1644
1640
1642
1650
1441'
1630a
1601

FIG. 56

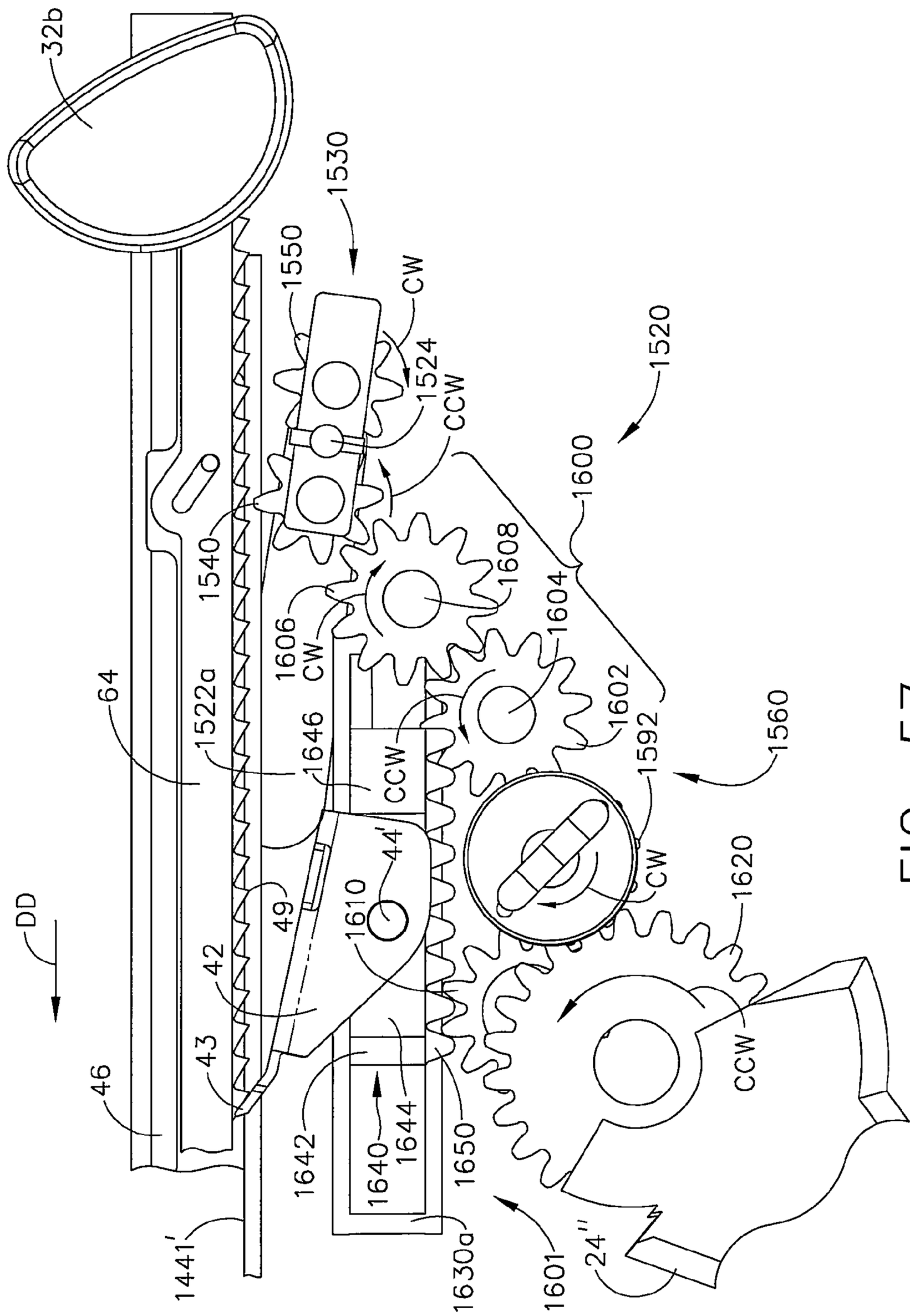
32b
1530
1550
CW
1524
CCW
1520
1600
1540
1608
1606
CW
1604
64
1522a
1646
CCW
1602
1592
1560
44'
CW
1620
DD
49
1610
42
43
CCW
46
1642
1640
1644
1650
1441'
1630a
1601
24''

FIG. 57

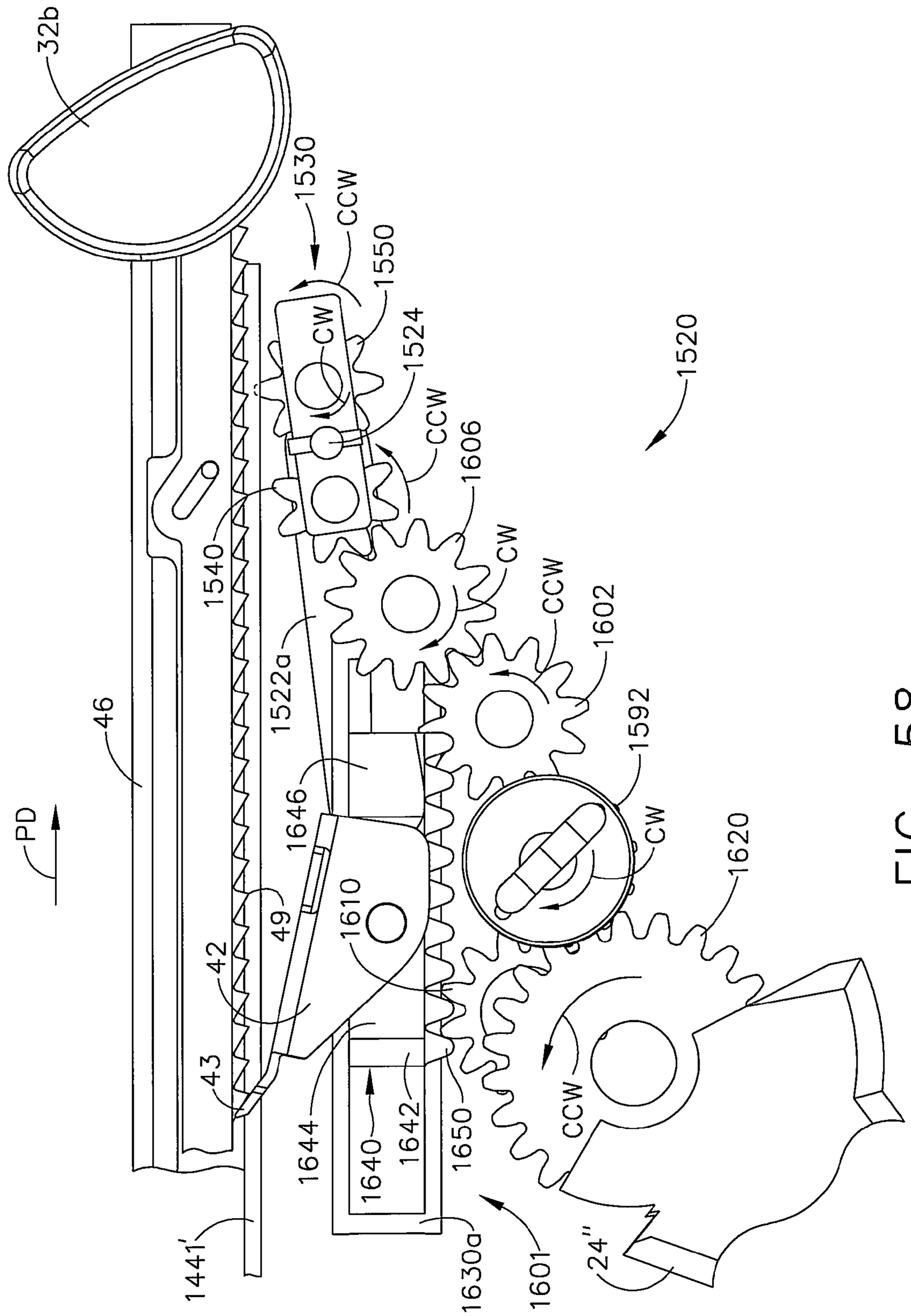
32b
1530
CCW
1550
CW
1524
CCW
1520
1606
1540
CW
CCW
1602
1522a
46
1592
1646
CW
PD
1620
49
1610
42
43
CCW
1644
1640
1642
1650
1441'
1630a
1601
24''

FIG. 58

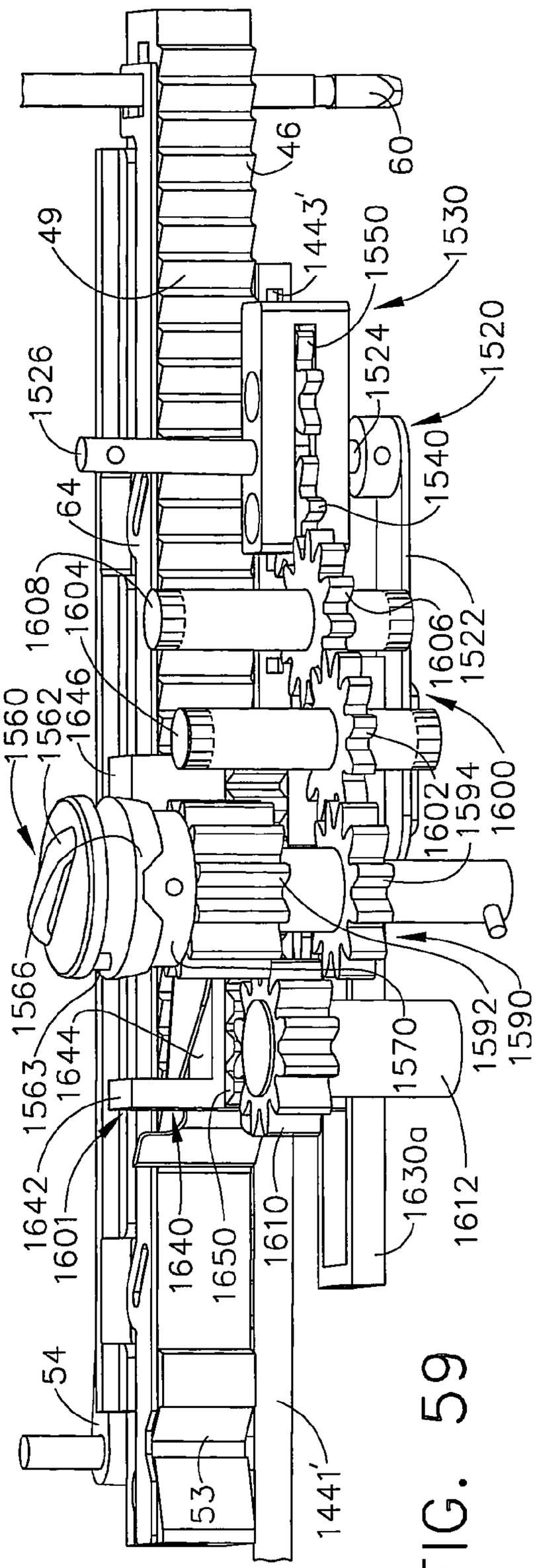
46
60
49
1443'
1550
1530
1520
1524
1540
1526
64
1608
1604
1606
1522
1560
1562
1646
1602
1594
1600
1566
1592
1590
1563
1644
1570
1642
1601
1640
1650
1610
1612
1630a
54
53
1441'

FIG. 59

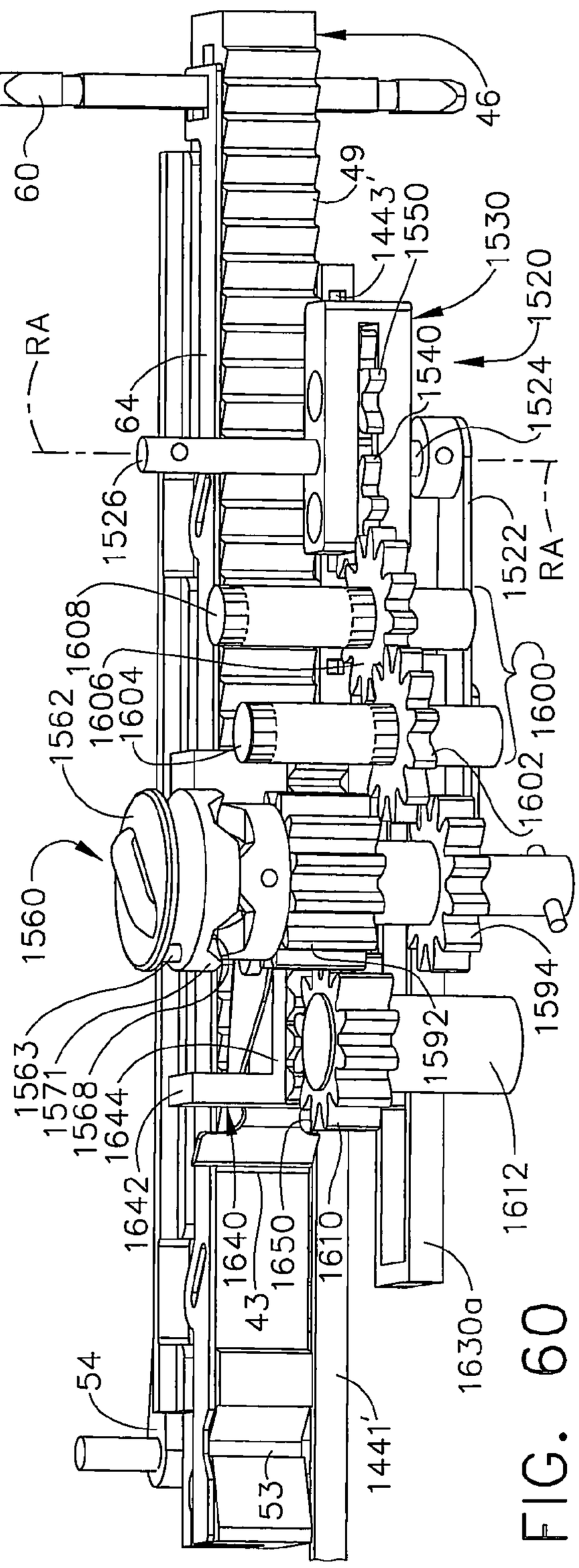
60
46
49
1443'
1550
1530
1520
RA
64
1540
1524
1526
1522
RA
1608
1606
1604
1562
1600
1602
1560
1594
1592
1563
1571
1568
1644
1612
1642
1640
1650
43
1610
1630a
54
53
1441'

FIG. 60

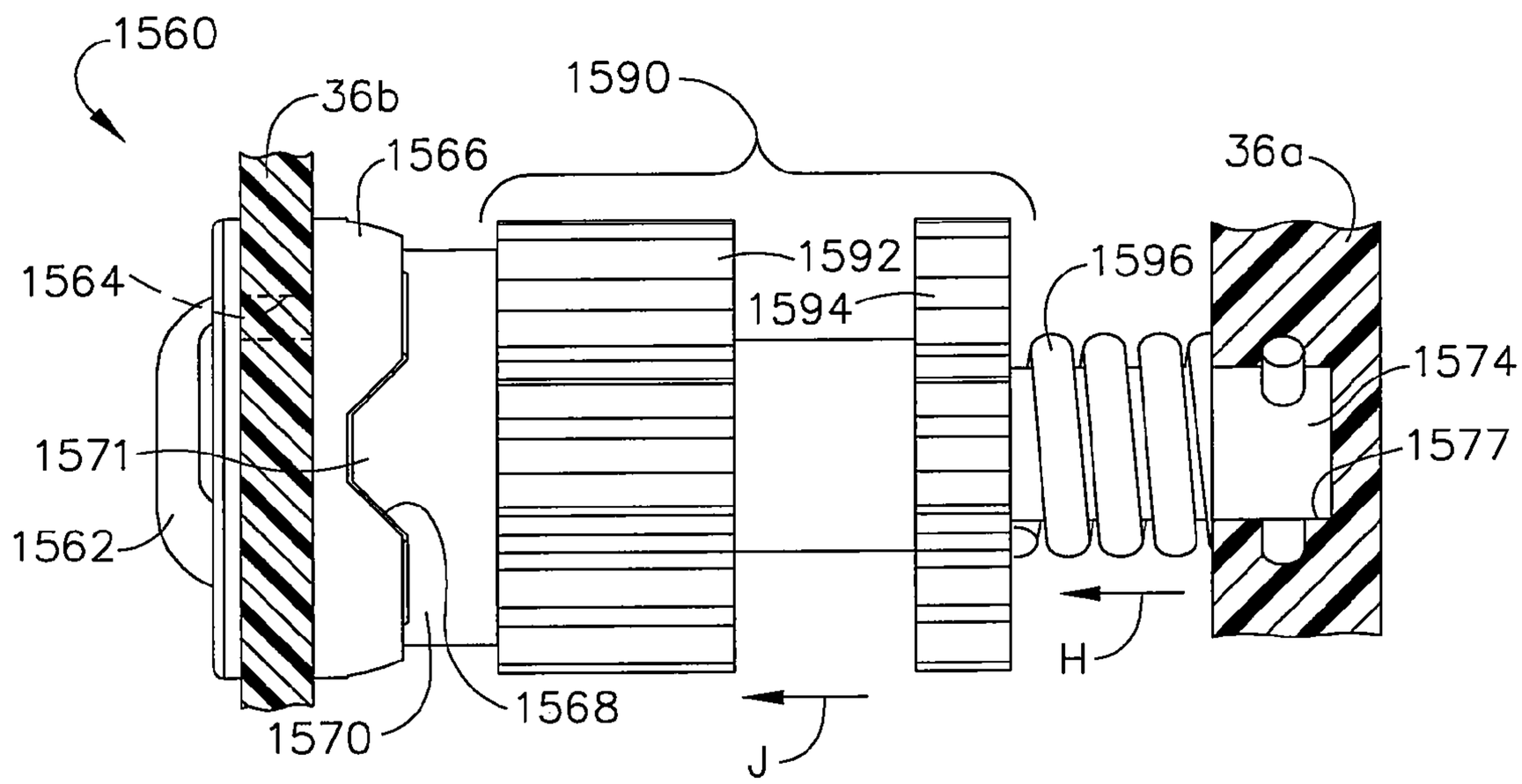
1560
36b
1566
1590
36a
1592
1596
1564
1594
1574
1571
1577
1562
H
1568
1570
J

FIG. 61

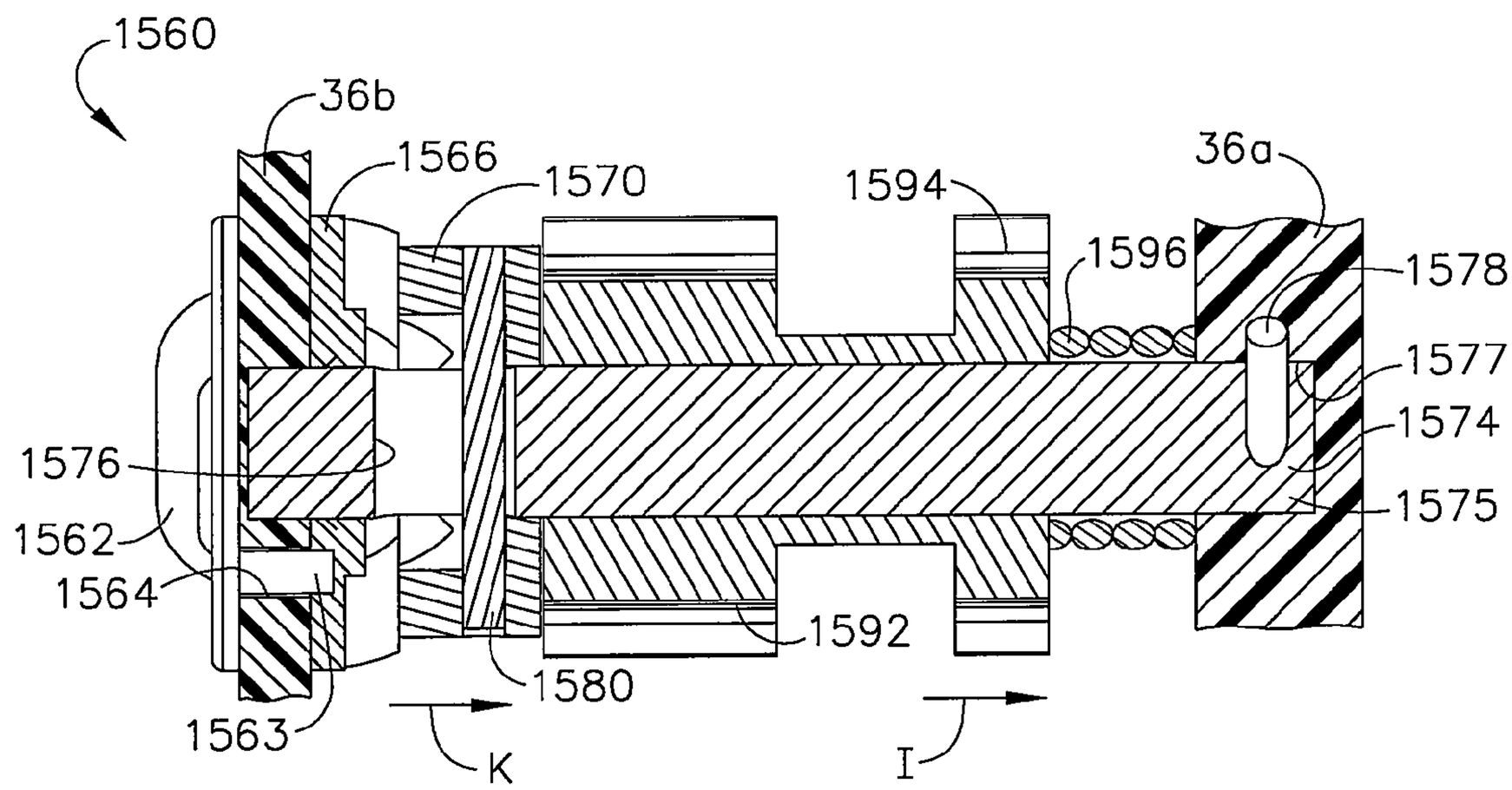
1560
36b
1566
1570
1594
36a
1596
1578
1577
1576
1574
1562
1575
1564
1592
1580
1563
K
I

FIG. 62

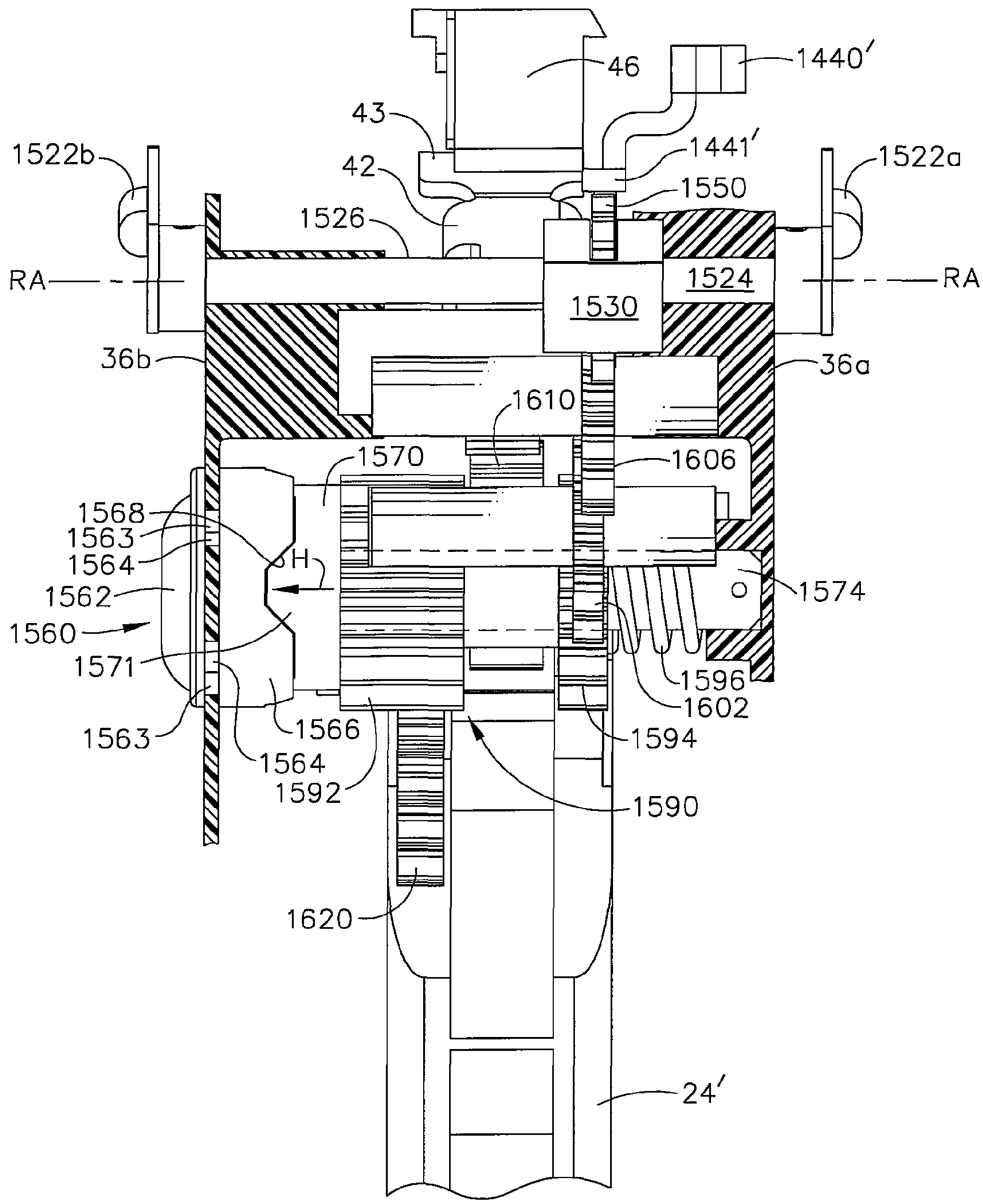
46
1440′
43
1441′
1522b
42
1522a
1550
1526
RA
1524
RA
1530
36b
36a
1610
1570
1606
1568
1563
1564
H
1562
1574
1560
1571
1596
1602
1563
1566
1594
1564
1592
1590
1620
24′

FIG. 63

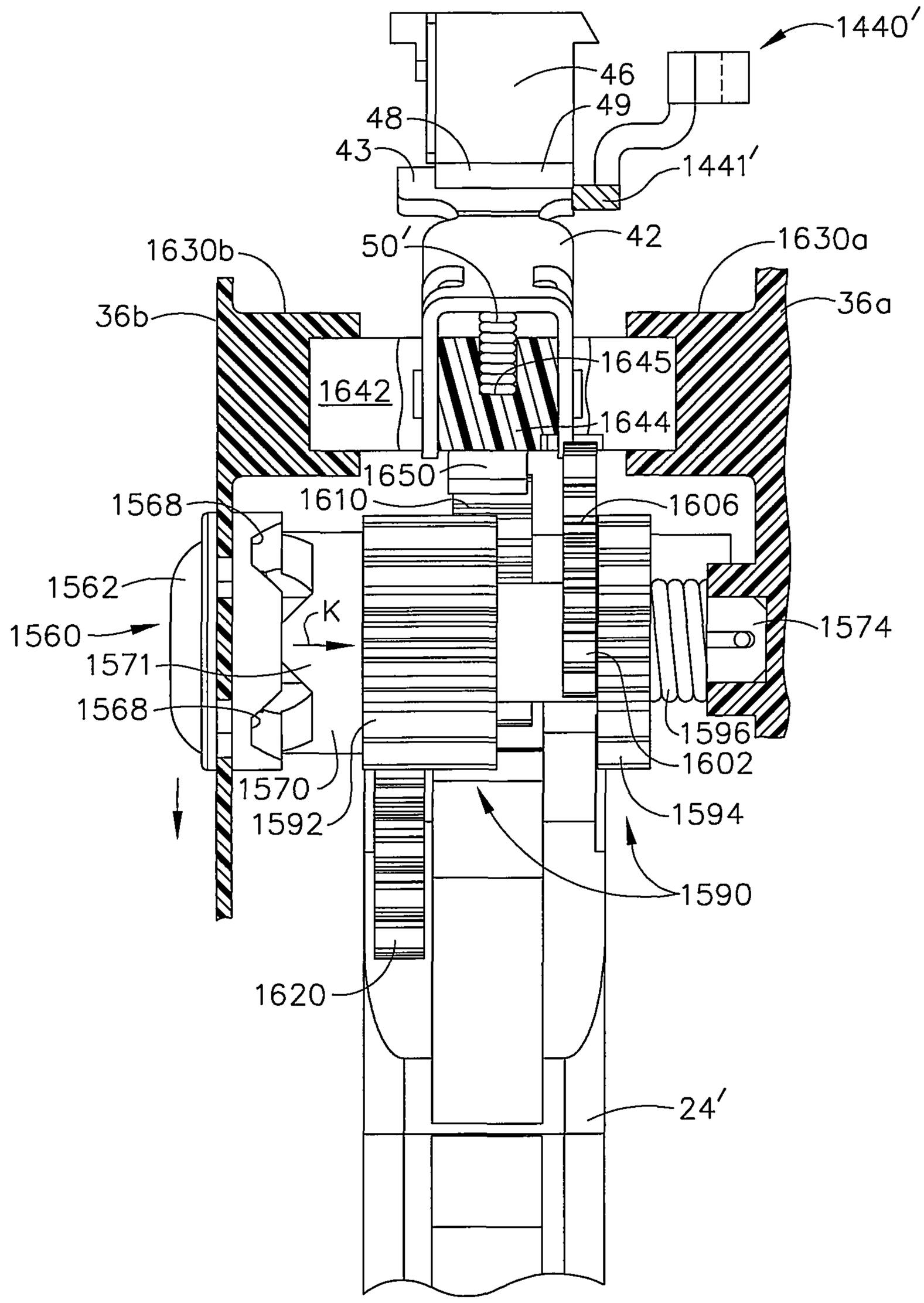
1440′
46
49
48
43
1441′
50′
42
1630b
1630a
36b
36a
1645
1642
1644
1650
1610
1606
1568
1562
K
1574
1560
1571
1568
1596
1602
1570
1592
1594
1590
1620
24′

FIG. 64

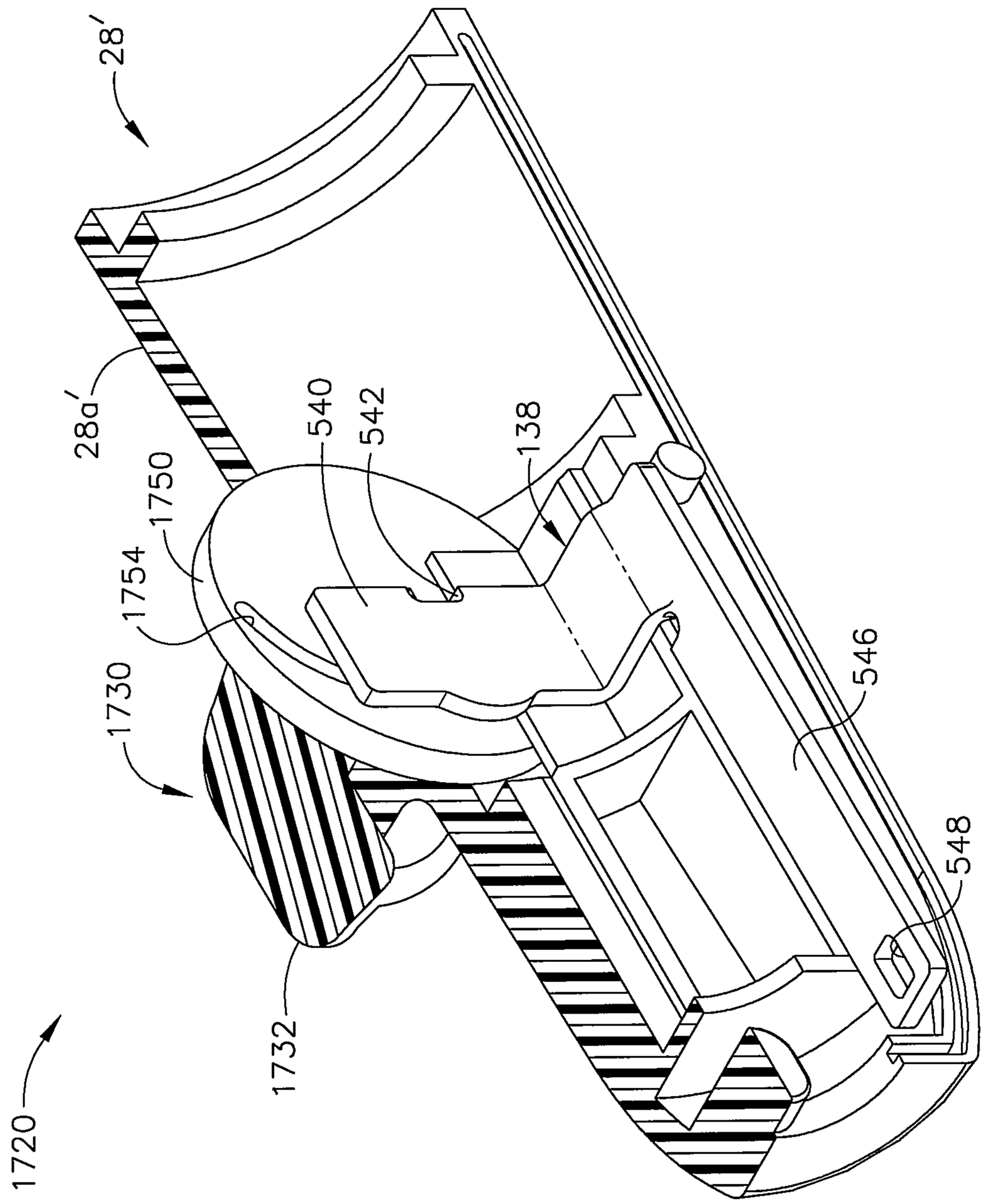

FIG. 65

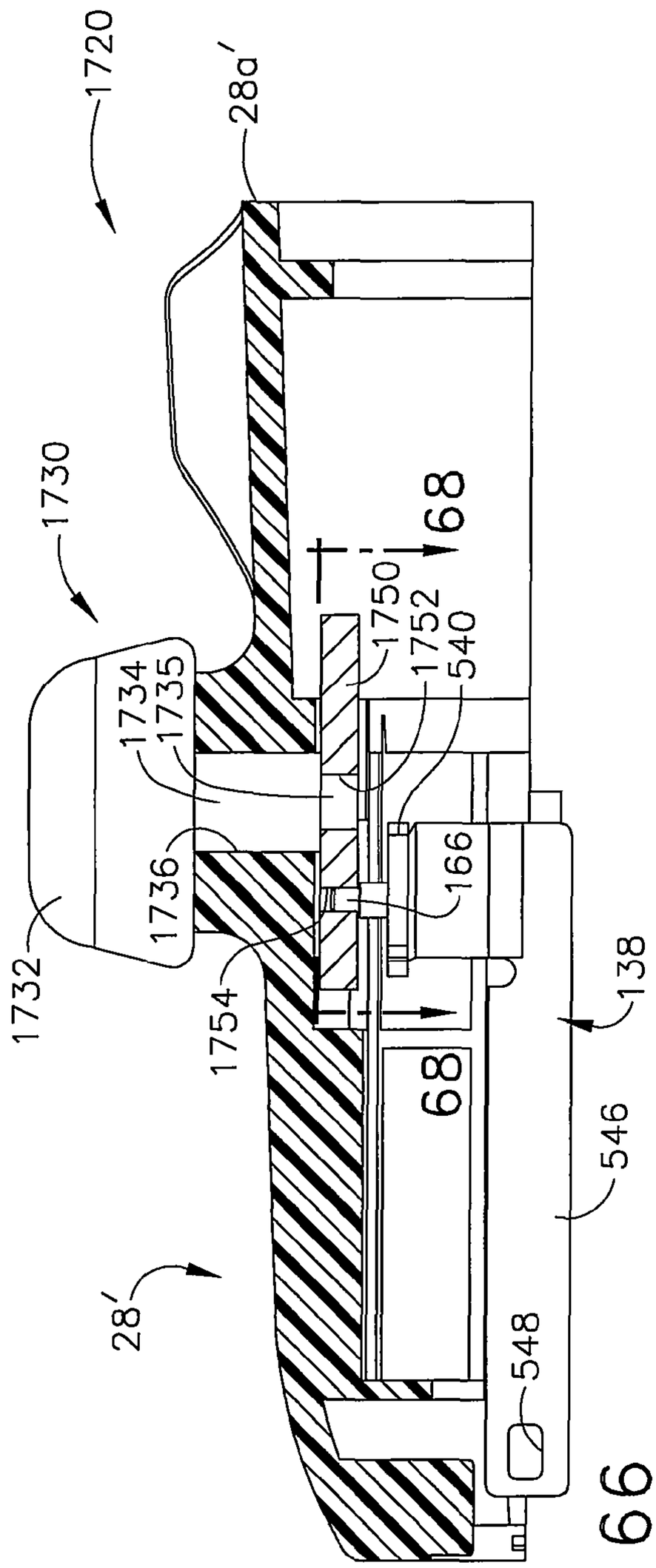

FIG. 66

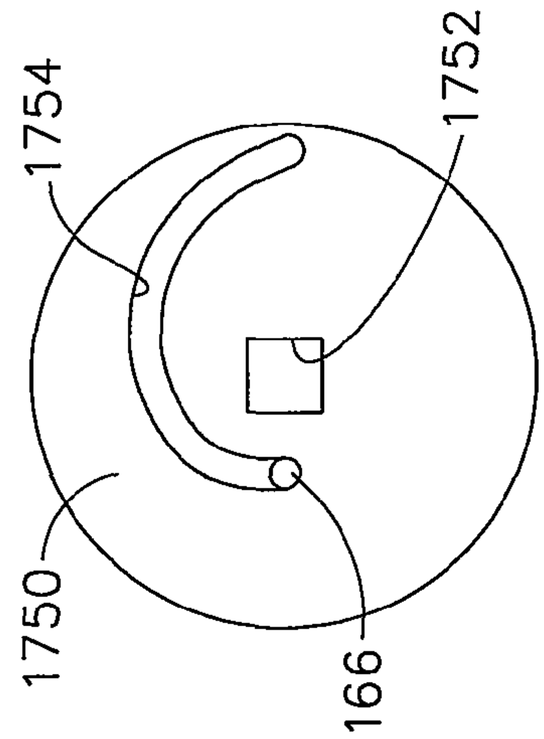

FIG. 69

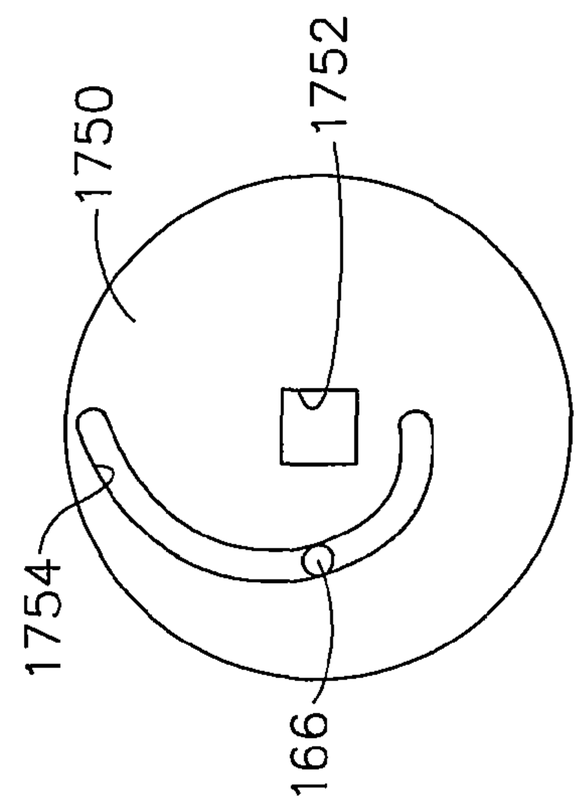

FIG. 68

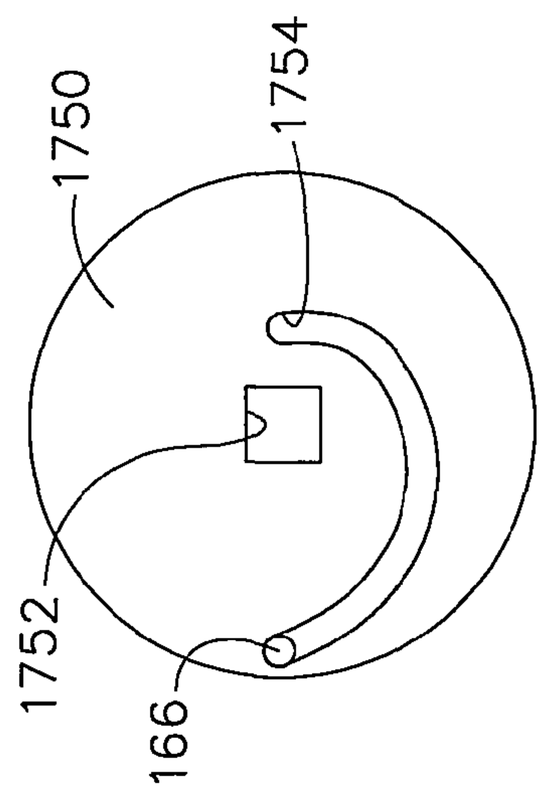

FIG. 67

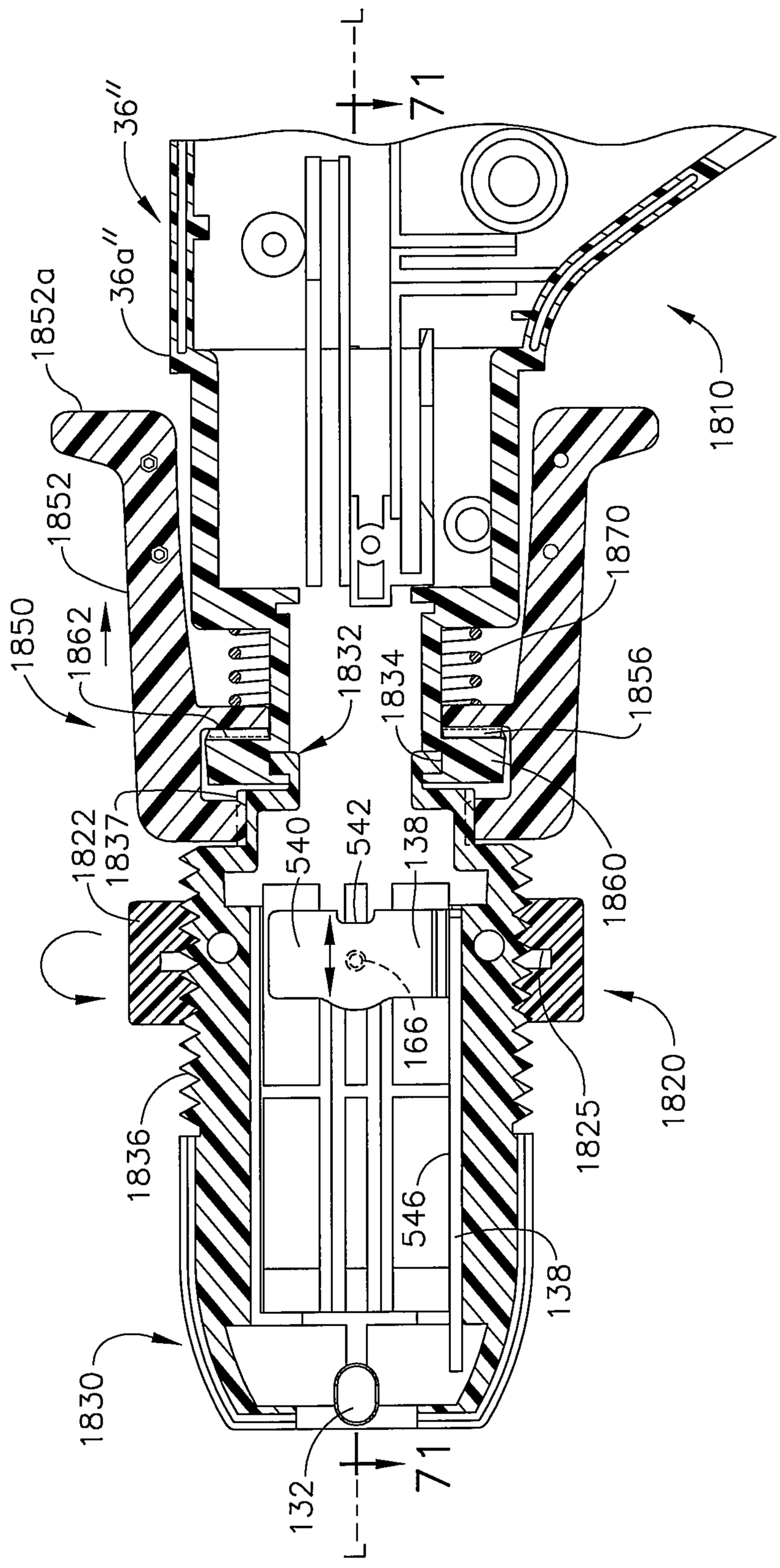
L
71
36''
36a''
1852a
1852
1850
1862
1832
1834
1870
1856
1810
1822
1837
540
542
138
1860
166
1820
1825
1836
546
138
1830
132
71
L

FIG. 70

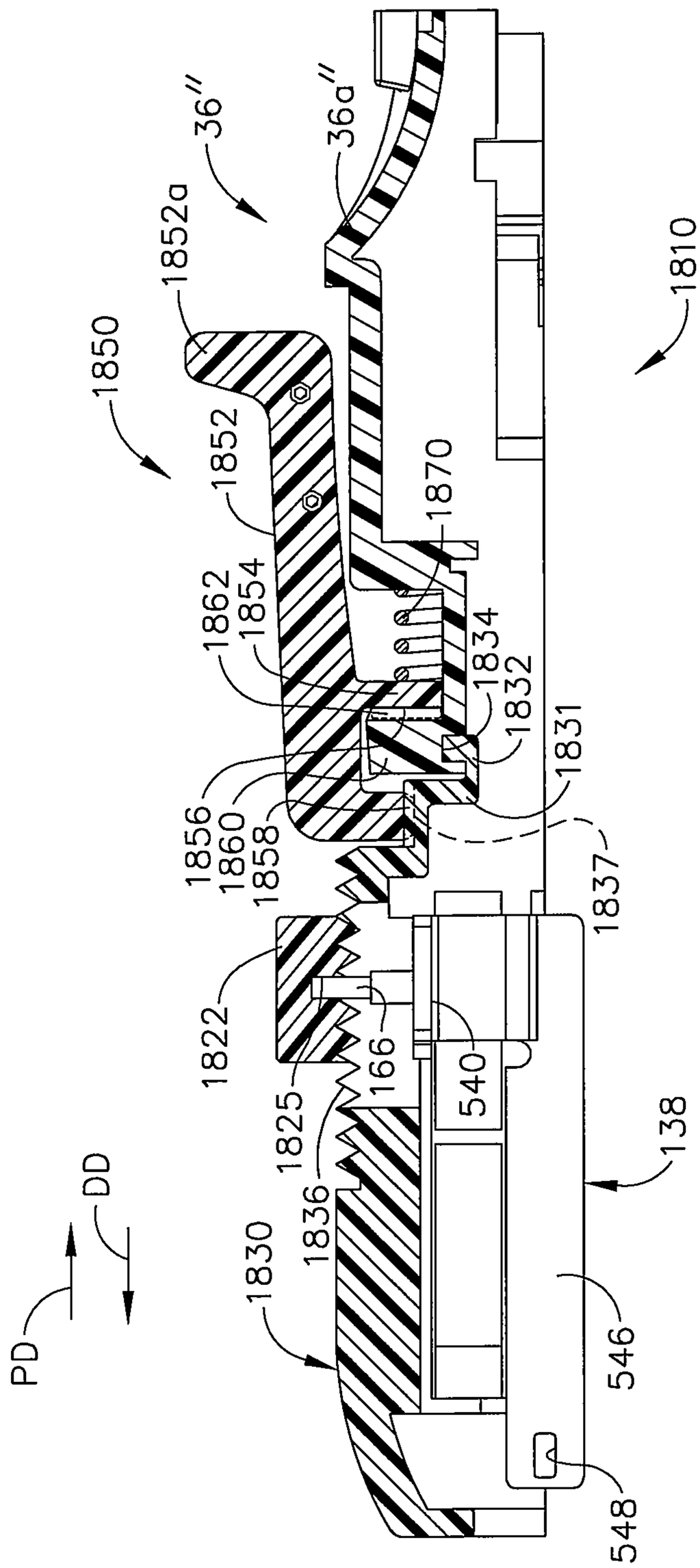
1850
1852a
36''
36a''
1810
1852
1870
1862
1854
1834
1832
1831
1856
1860
1858
1837
1822
1825
166
540
138
1836
1830
546
548
PD
DD

FIG. 71

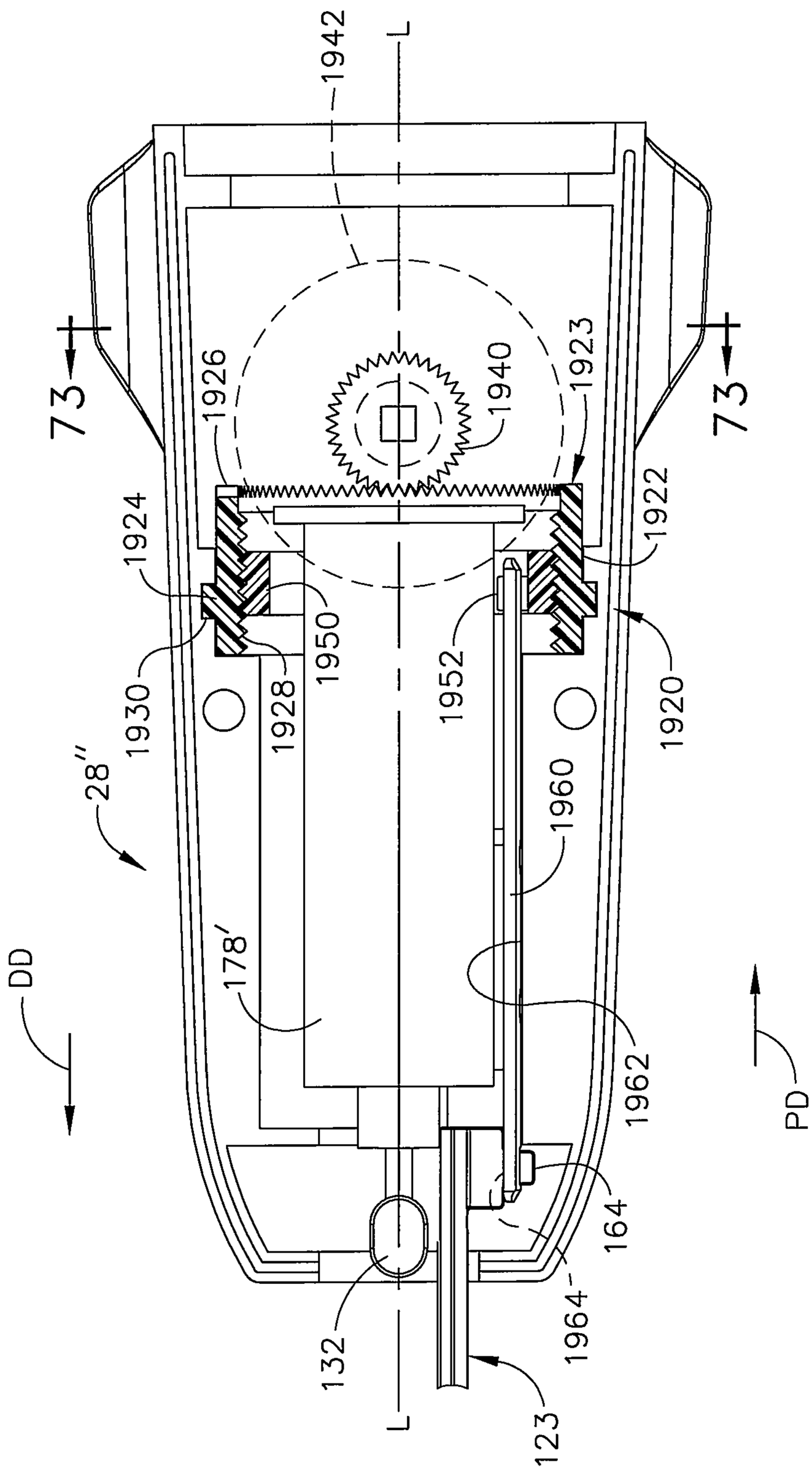
1942
L
73
73
1926
1940
1923
1924
1922
1950
1930
1928
1952
1920
28''
1960
178'
DD
1962
PD
164
1964
132
L
123

FIG. 72

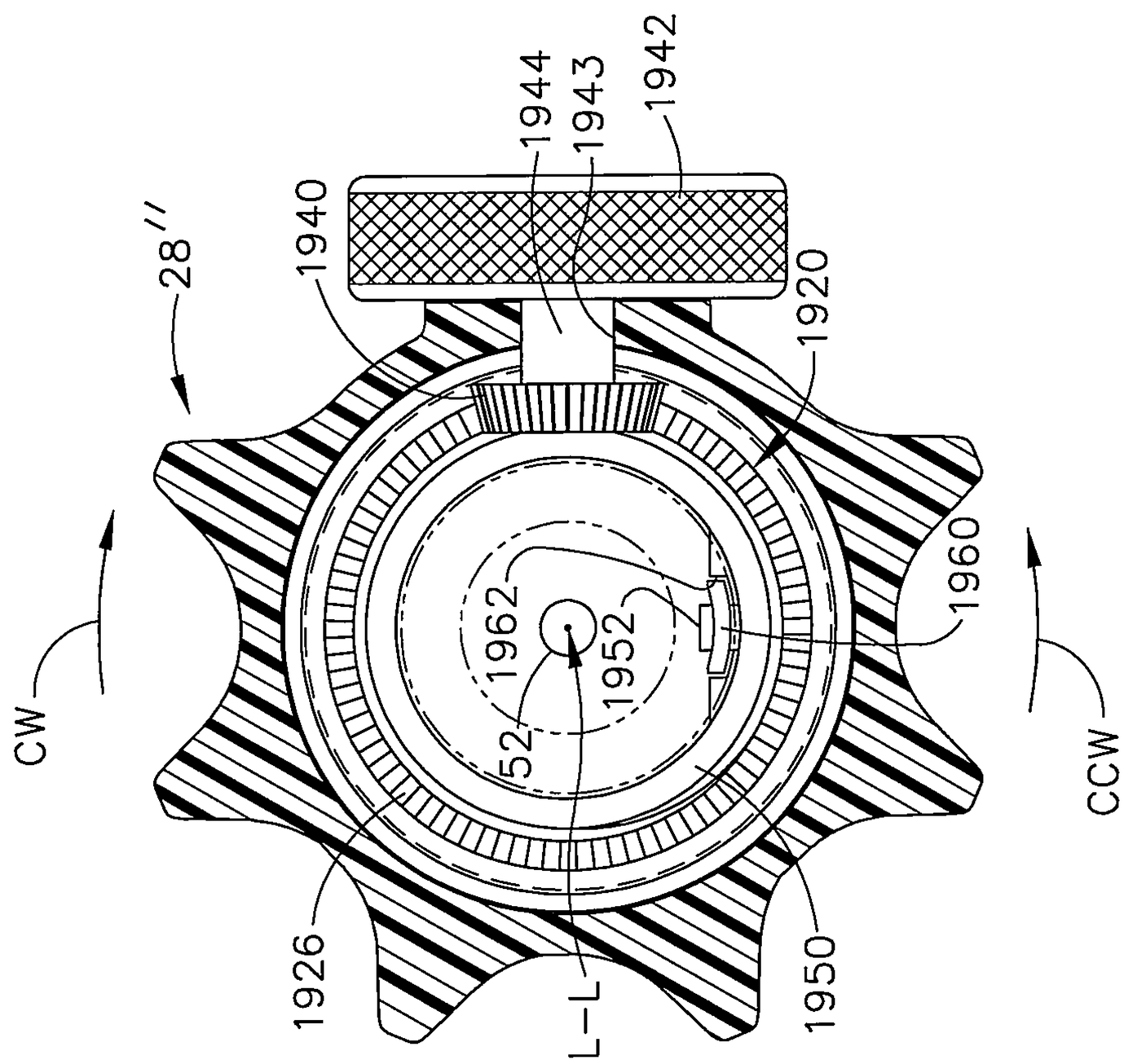
28''
1940
1944
1943
1942
1920
1960
1962
1952
52
CW
CCW
1926
L–L
1950

FIG. 73

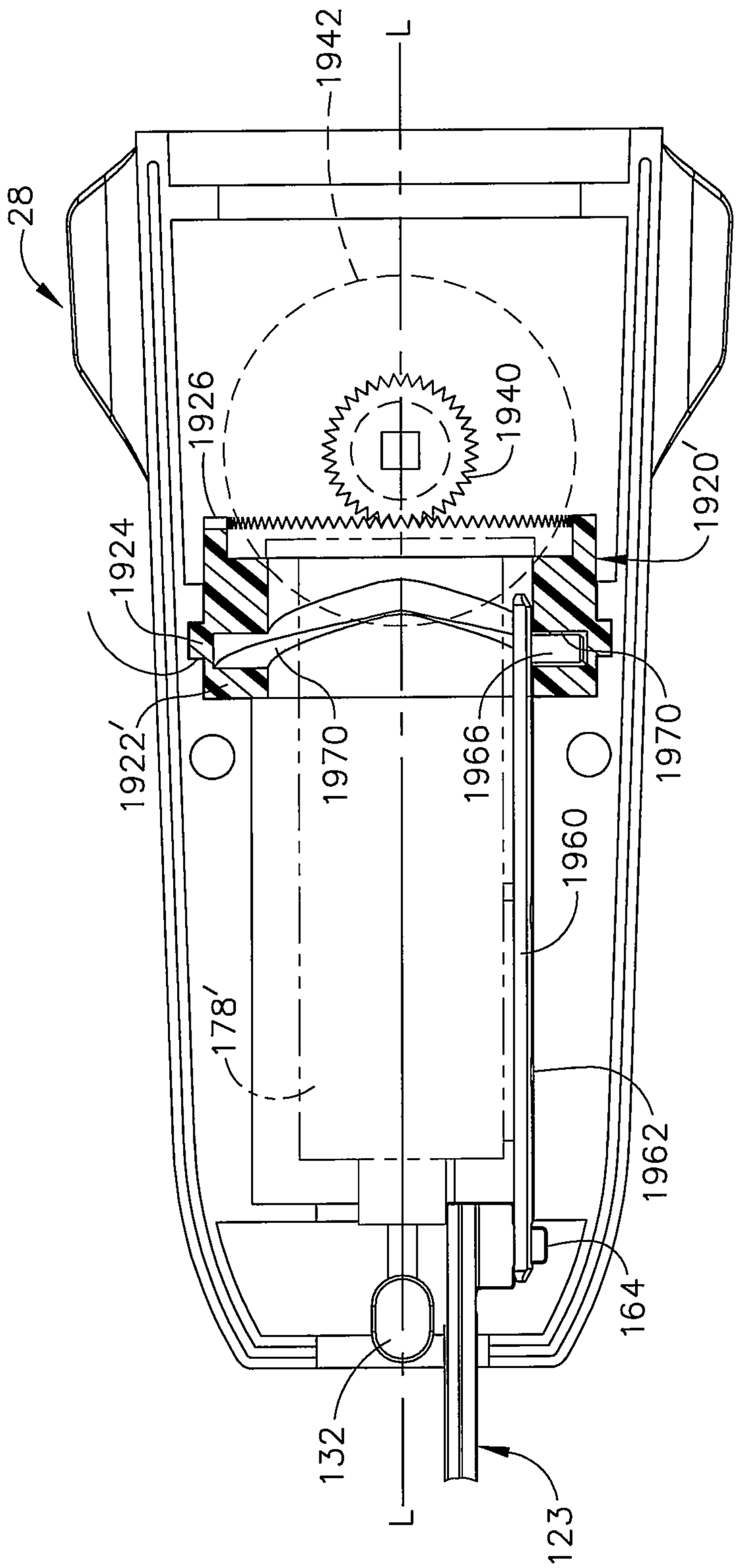
28
1942
L
1926
1940
1920'
1924
1922'
1970
1966
1970
1960
178'
1962
164
132
L
123

FIG. 74

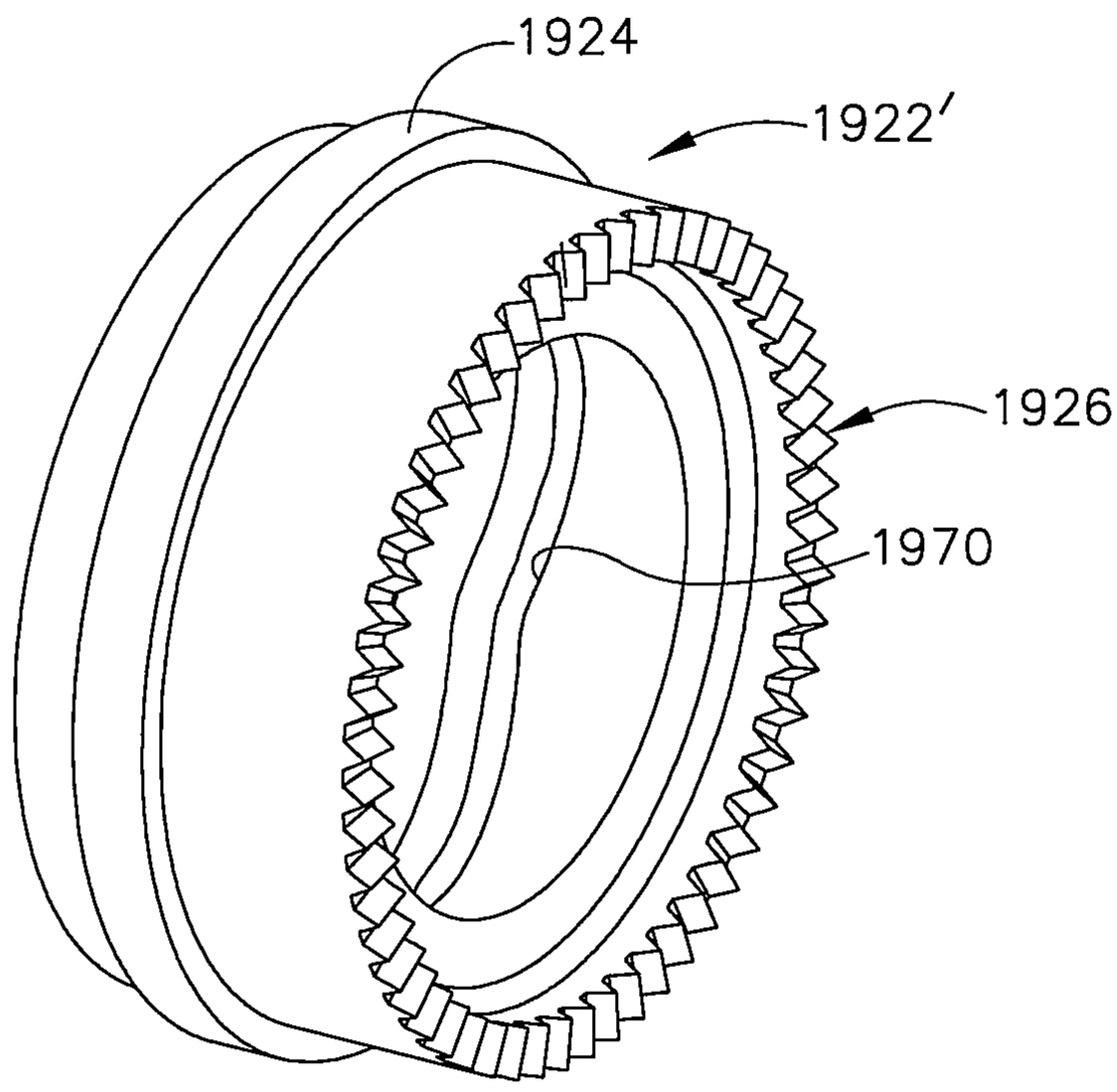

FIG. 75

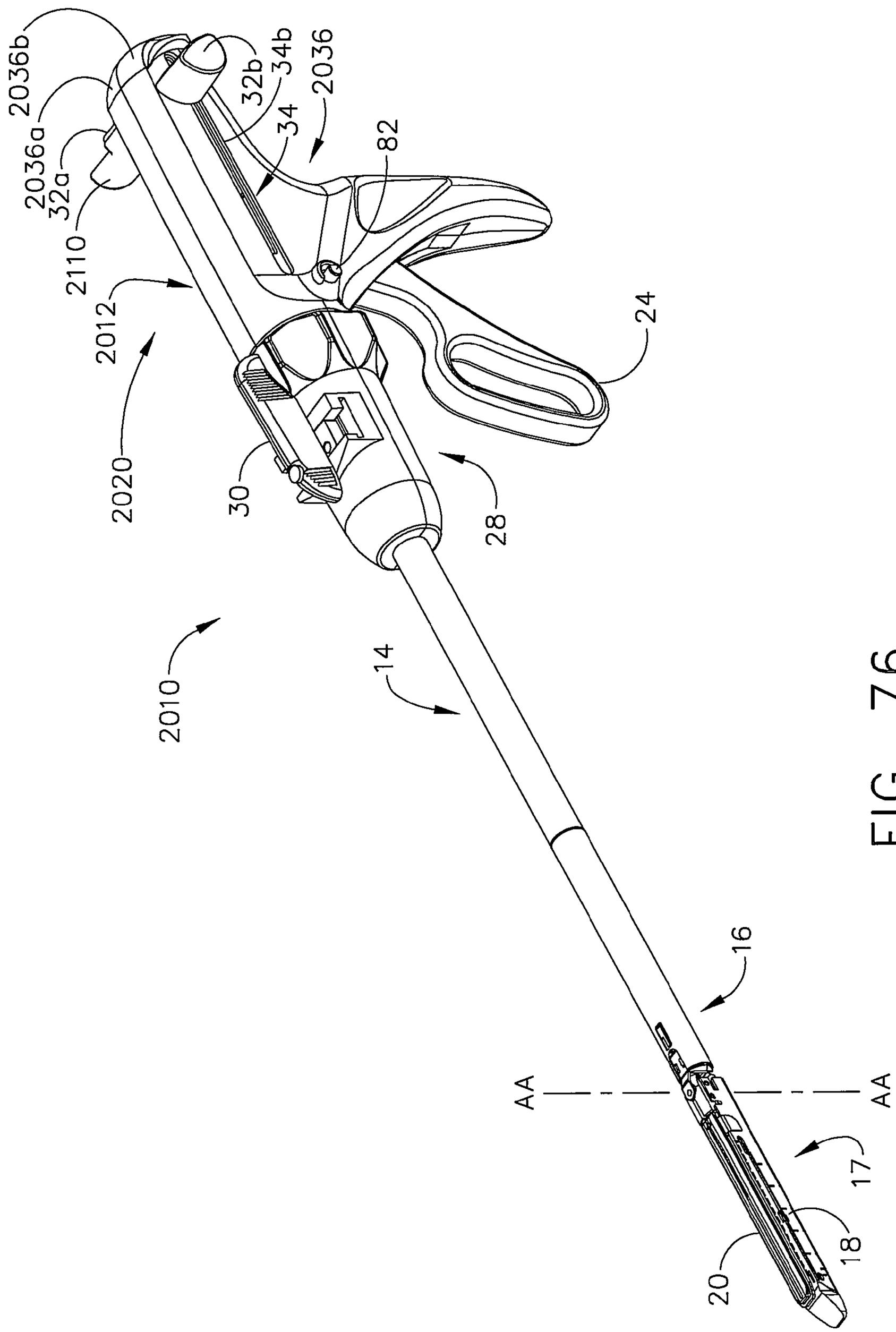
2036b
2036a
32a
2110
2012
2020
32b
34b
34
2036
82
24
30
28
2010
14
16
AA
AA
17
18
20

FIG. 76

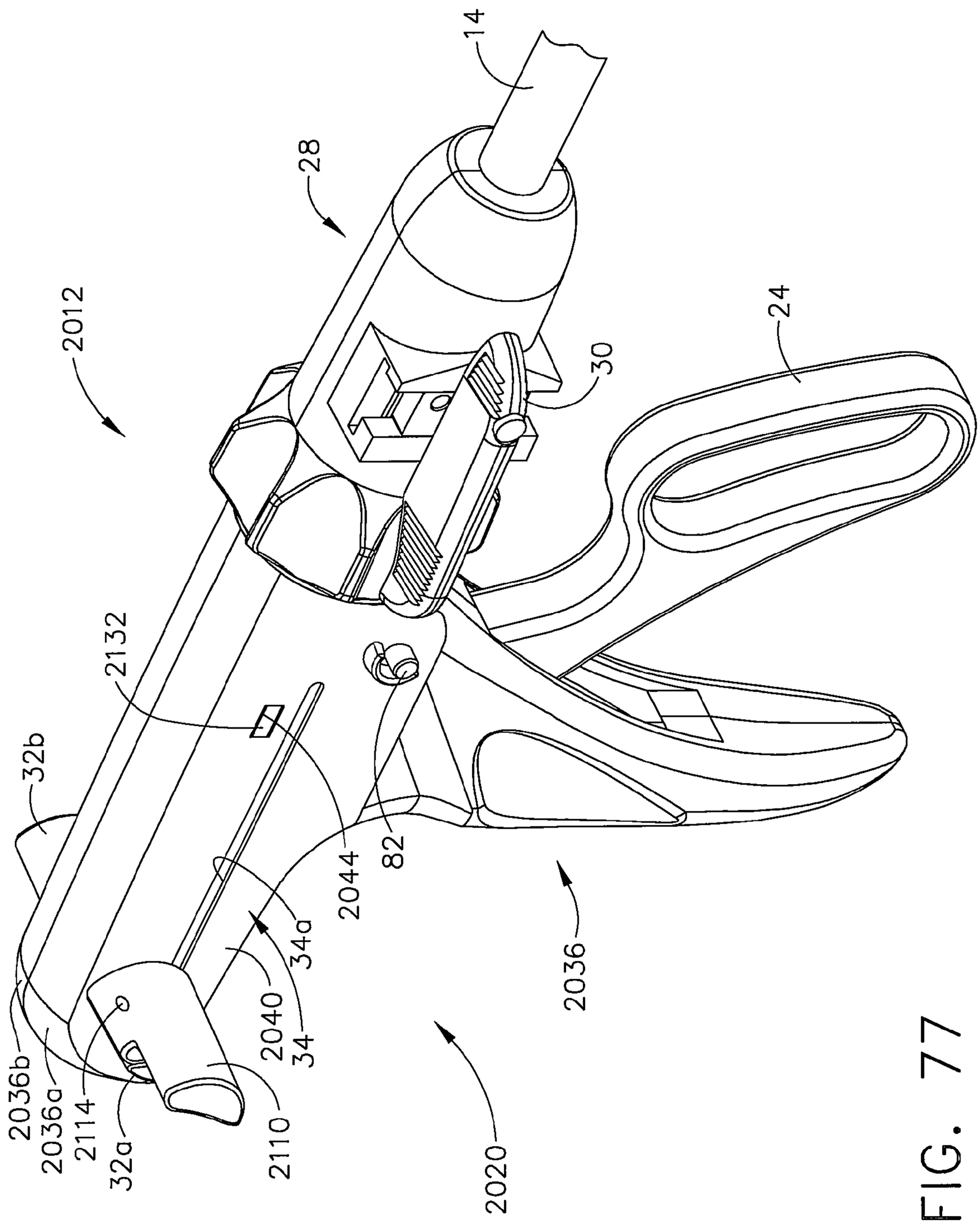
14
28
2012
30
24
2132
32b
2044
82
34a
2036
2040
34
2036b
2036a
2114
32a
2110
2020

FIG. 77

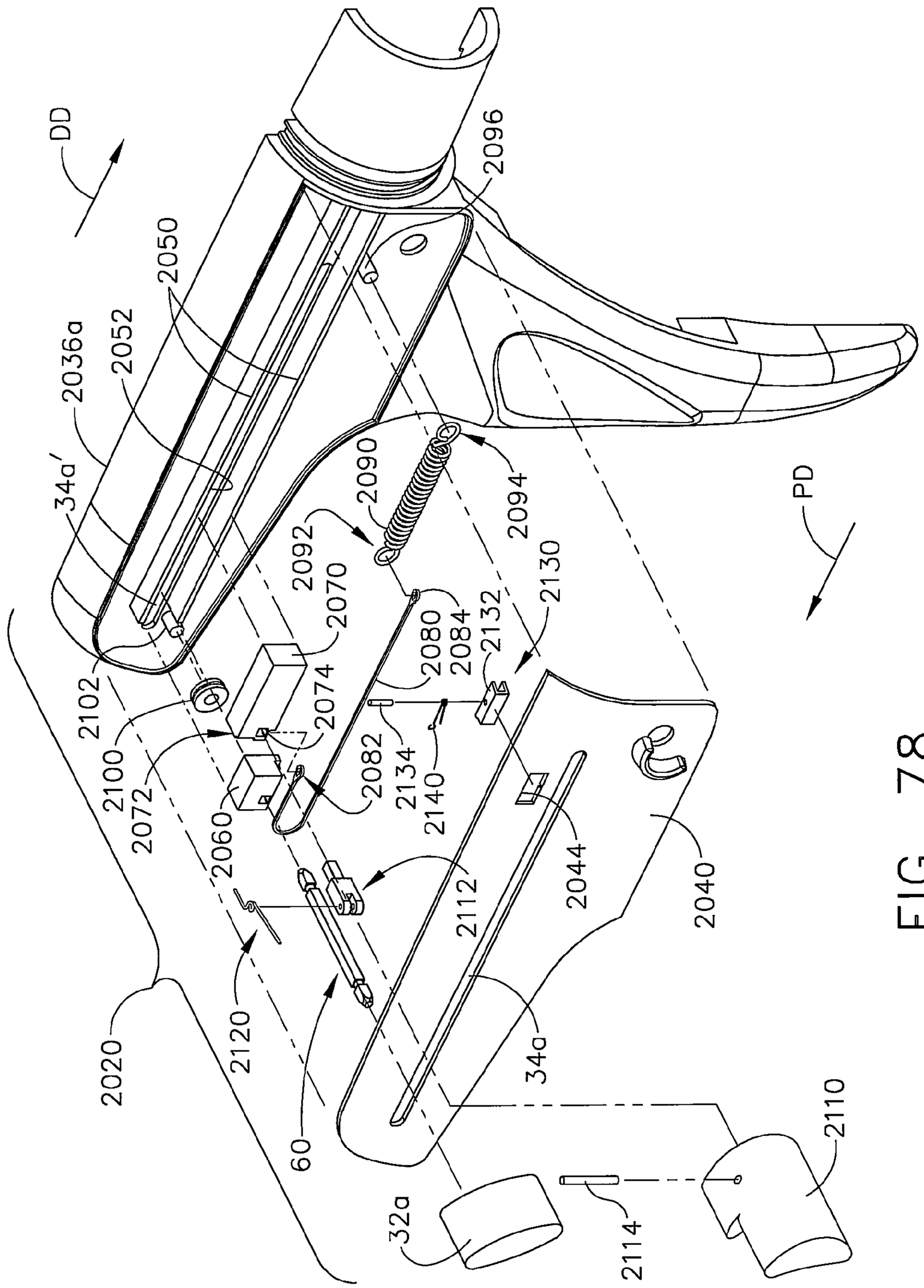
DD
2096
2050
2052
2036a
34a'
2090
2094
PD
2092
2070
2130
2080
2084
2132
2102
2074
2100
2082
2134
2140
2072
2060
2112
2044
2040
2020
2120
34a
60
2110
32a
2114

FIG. 78

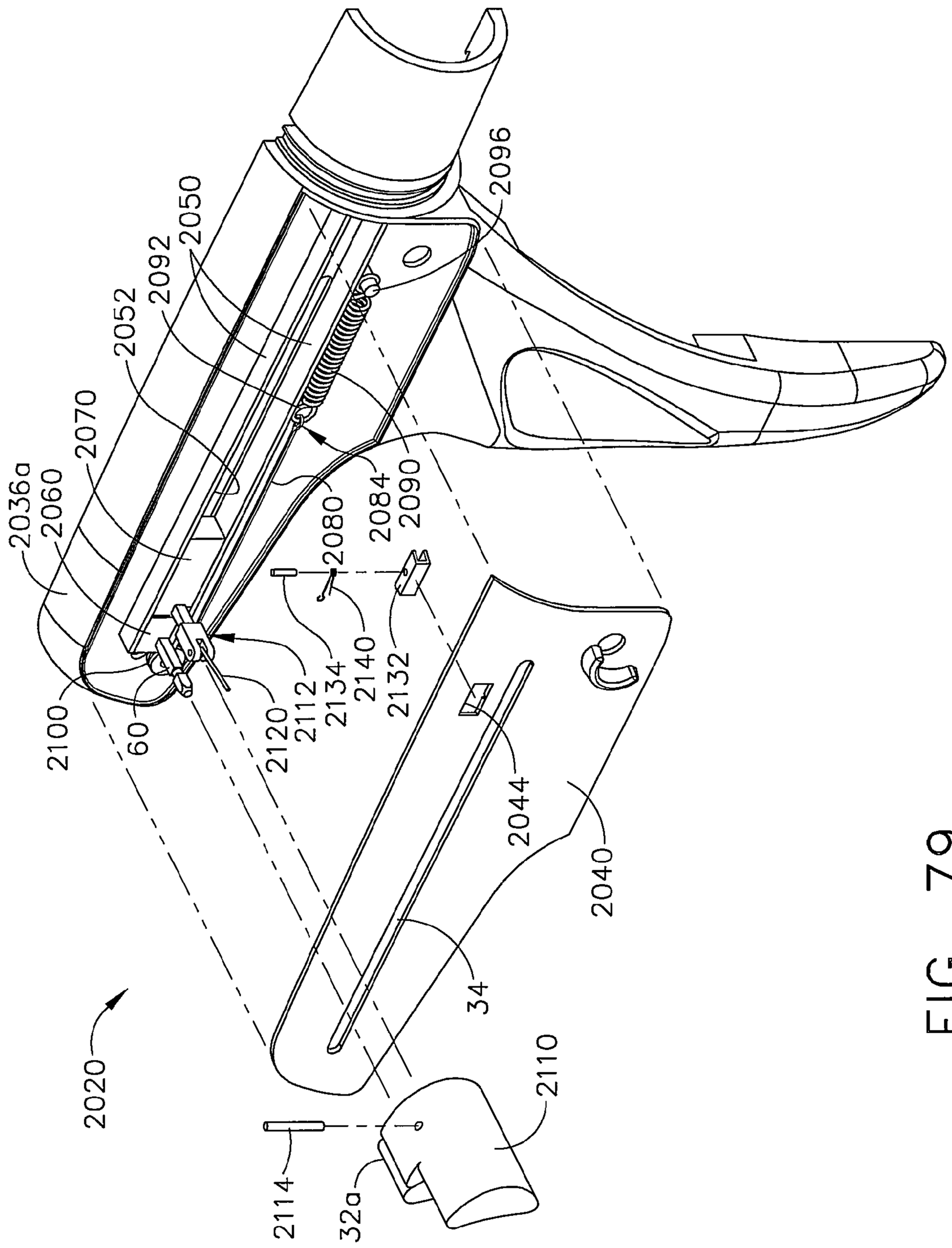
2020
2036a
2060
2070
2052
2092
2050
2096
2100
60
2120
2112
2134
2140
2132
2080
2084
2090
2044
2040
34
2110
2114
32a

FIG. 79

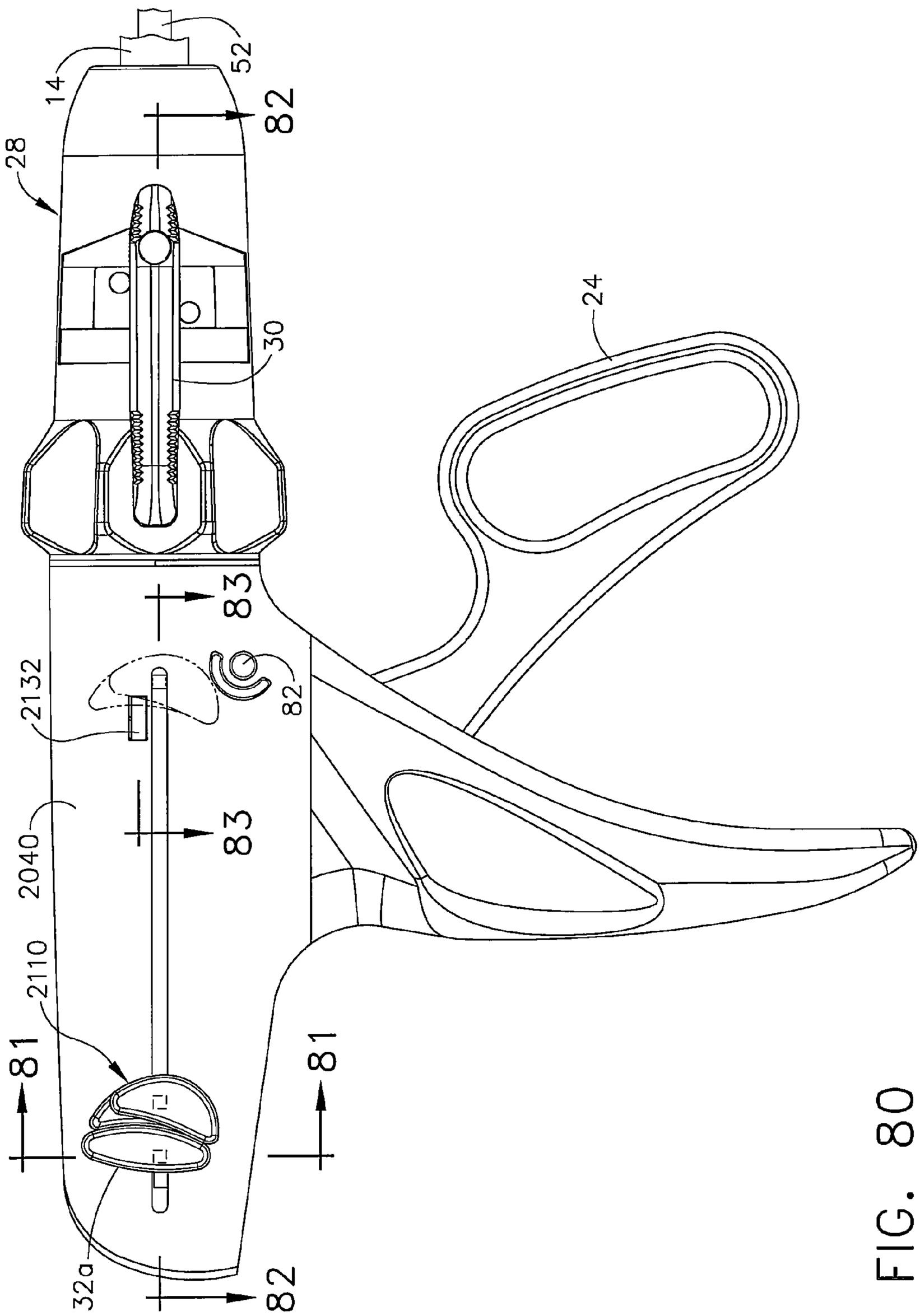

FIG. 80

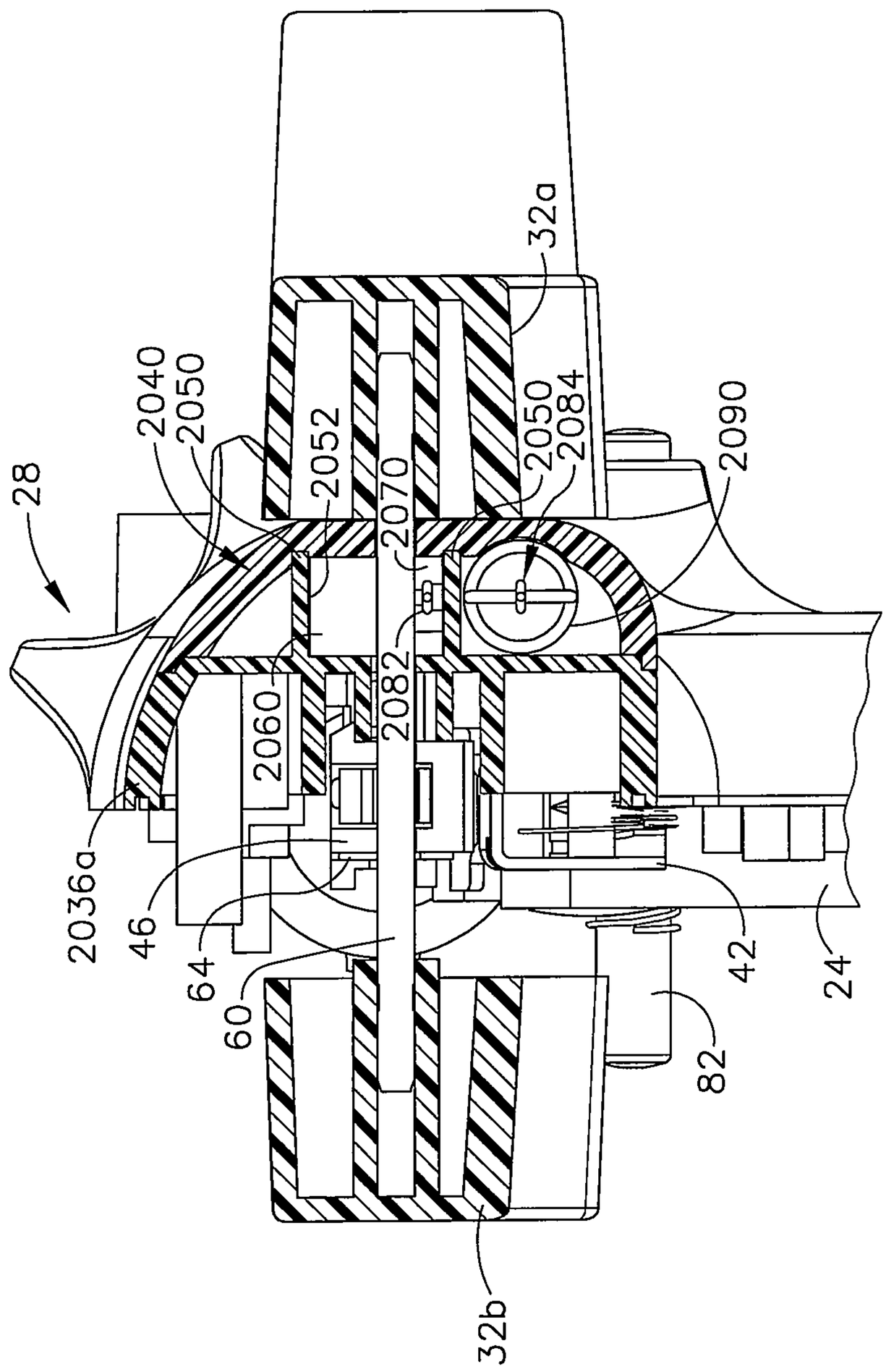
28
2040
2050
2052
2070
2050
2084
2090
32a
2082
2060
2036a
46
64
60
42
24
82
32b

FIG. 81

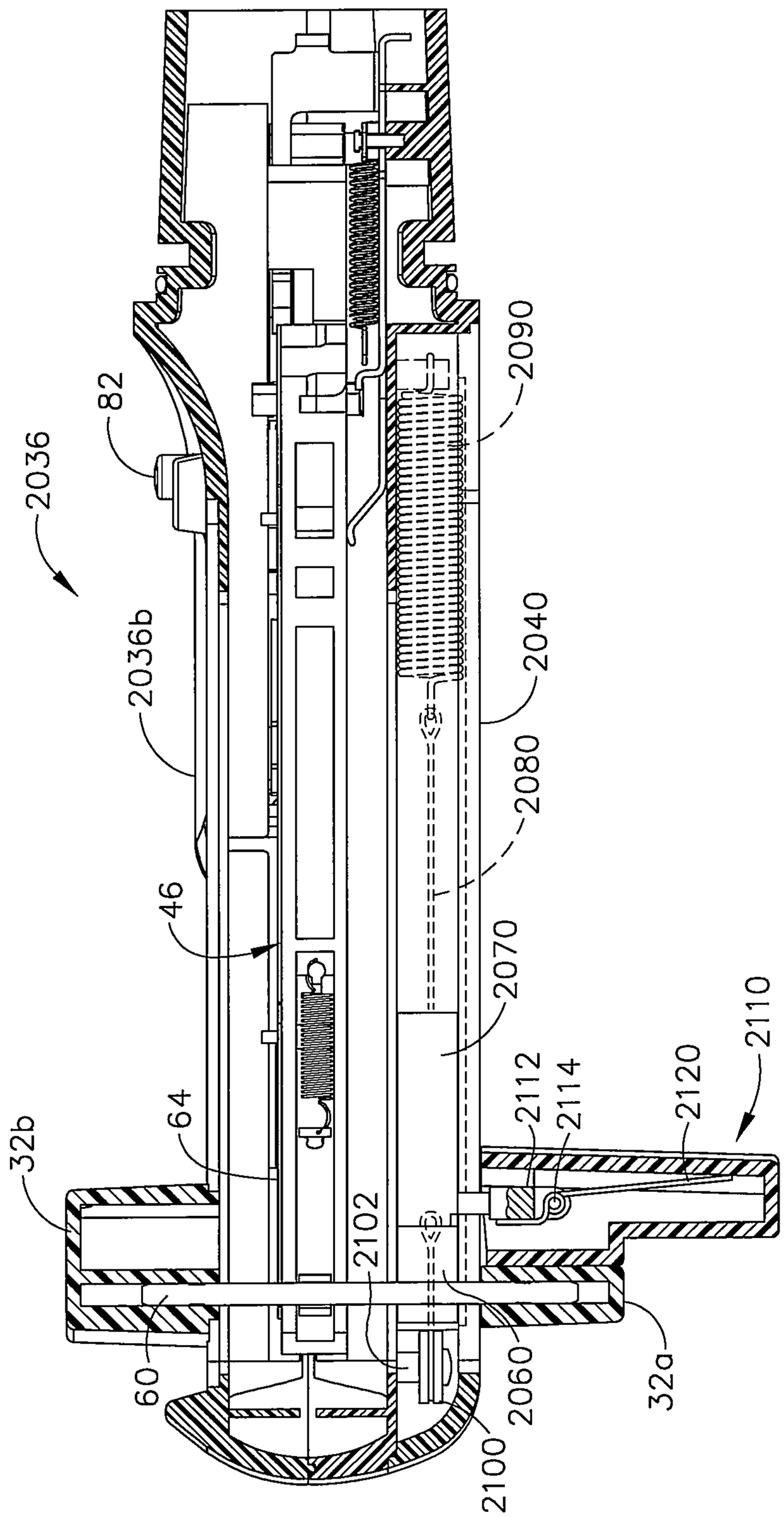
2036
82
2090
2036b
2040
2080
46
2070
64
2112
2114
2120
2110
32b
2102
60
2060
32a
2100

FIG. 82

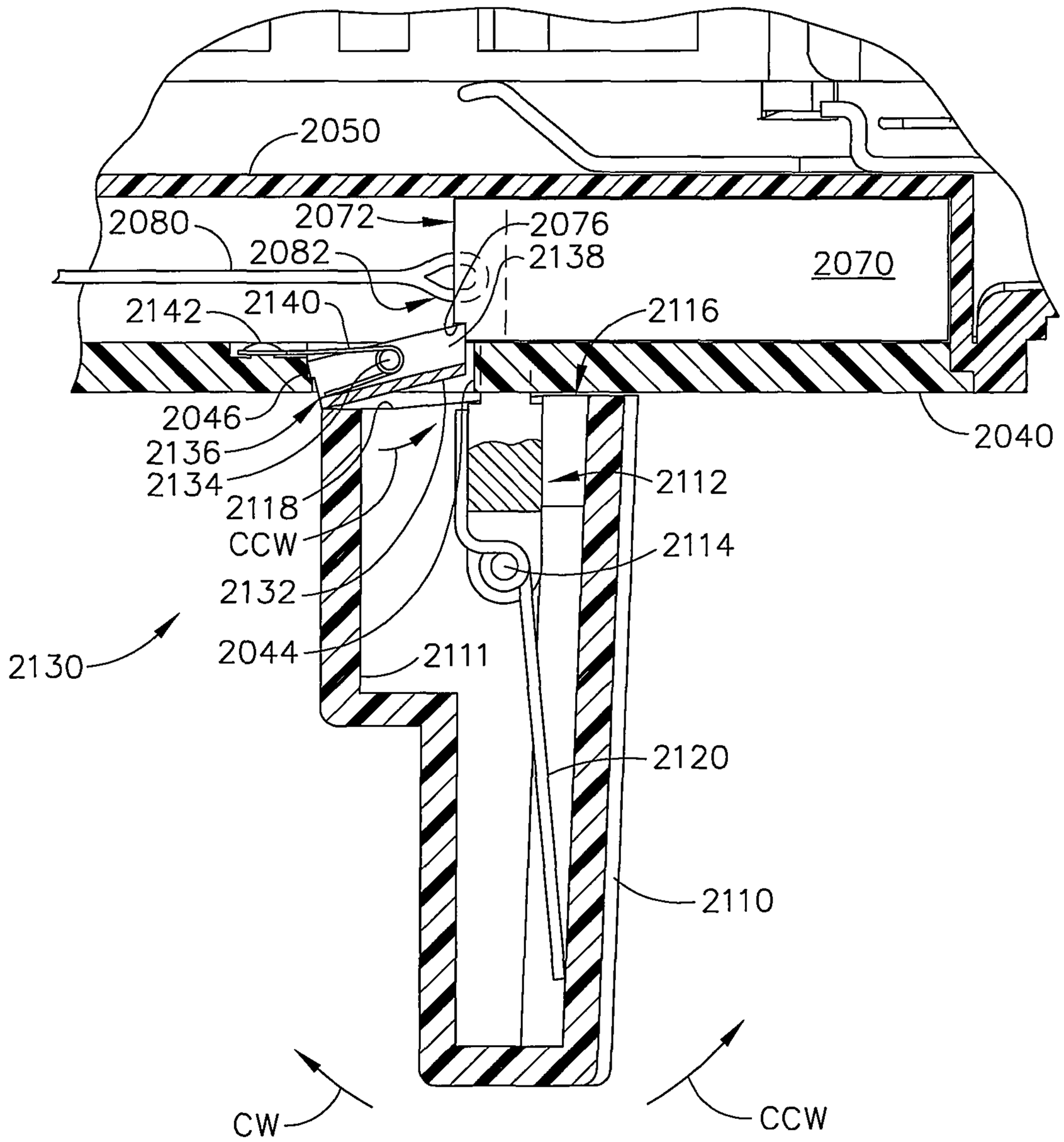
2050
2080
2072
2076
2082
2138
2070
2142
2140
2116
2046
2040
2136
2134
2112
2118
CCW
2114
2132
2130
2044
2111
2120
2110
CW
CCW

FIG. 83

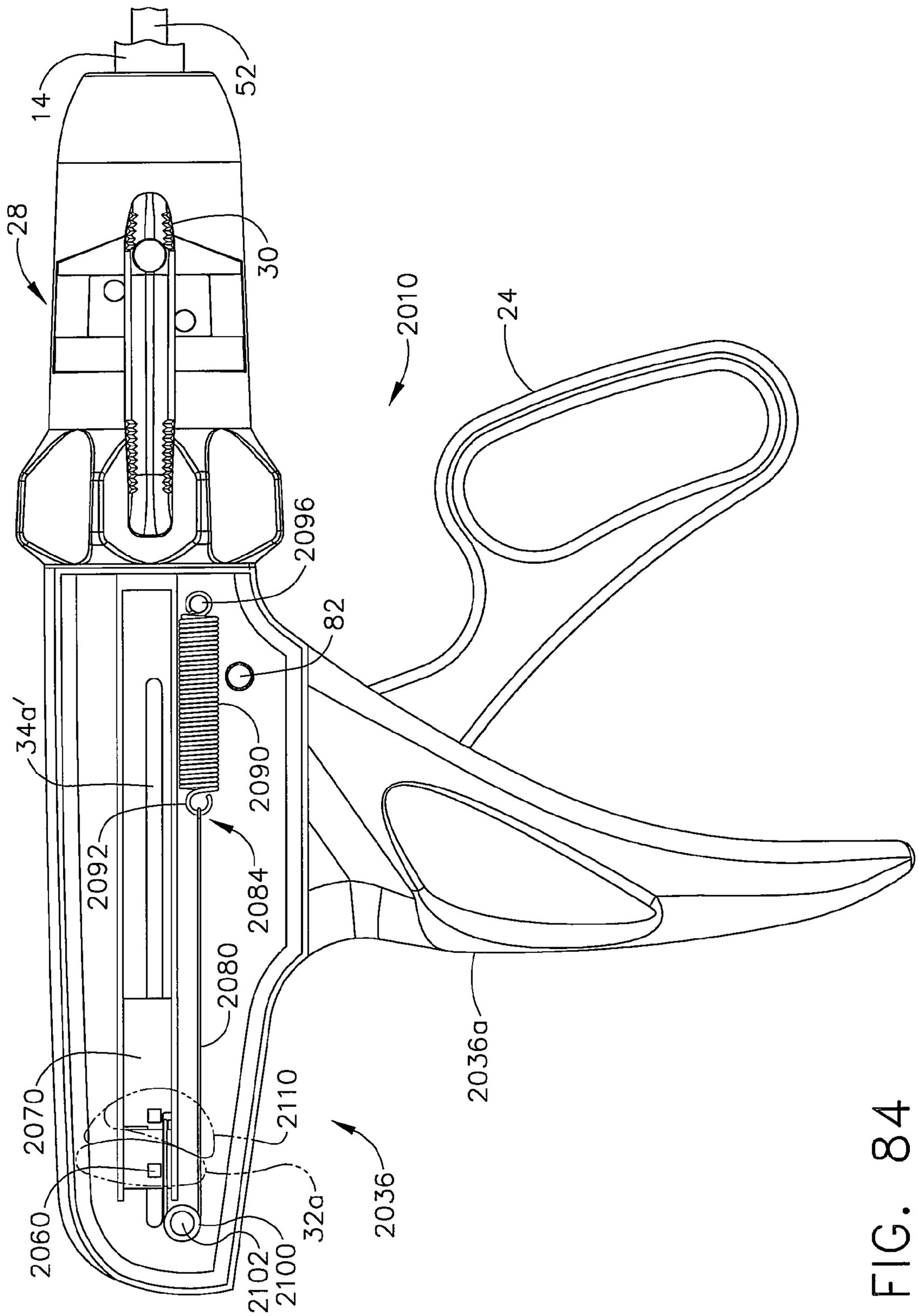
14
52
28
30
2010
24
2096
82
34a'
2090
2092
2084
2080
2036a
2070
2110
2060
32a
2036
2102
2100

FIG. 84

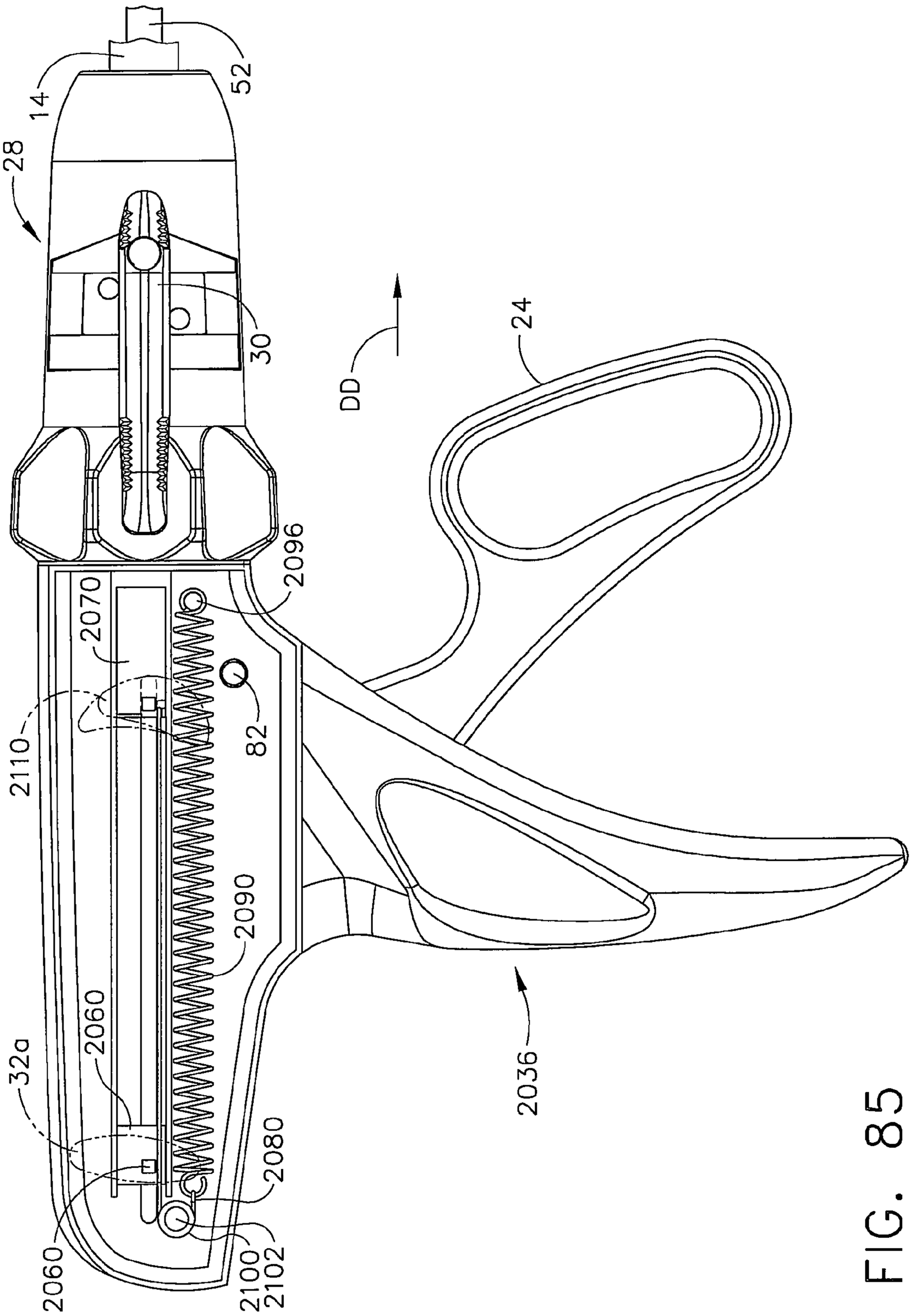
28
14
52
30
DD
24
2096
2070
82
2110
2090
2060
32a
2036
2080
2060
2100
2102

FIG. 85

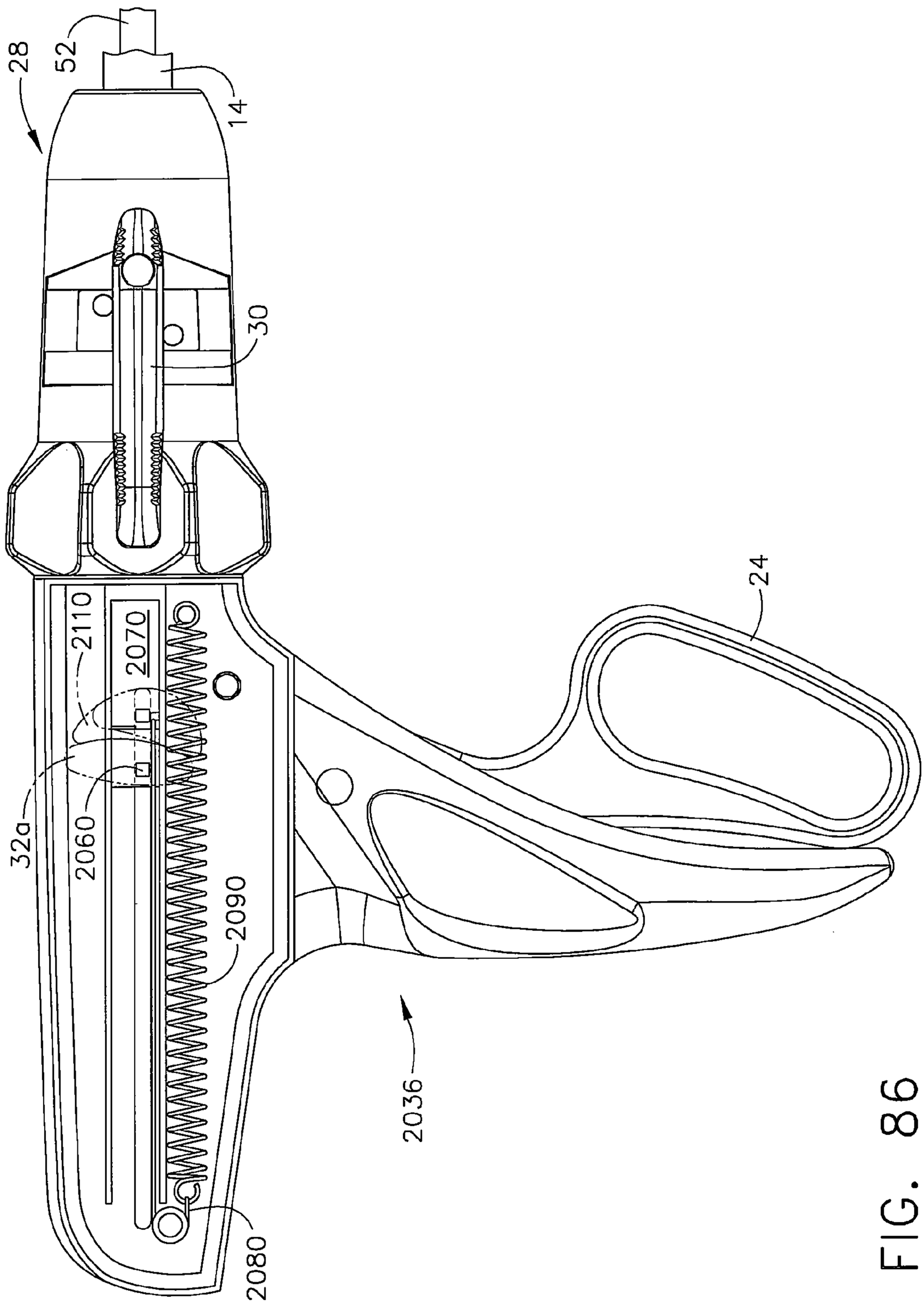

FIG. 86

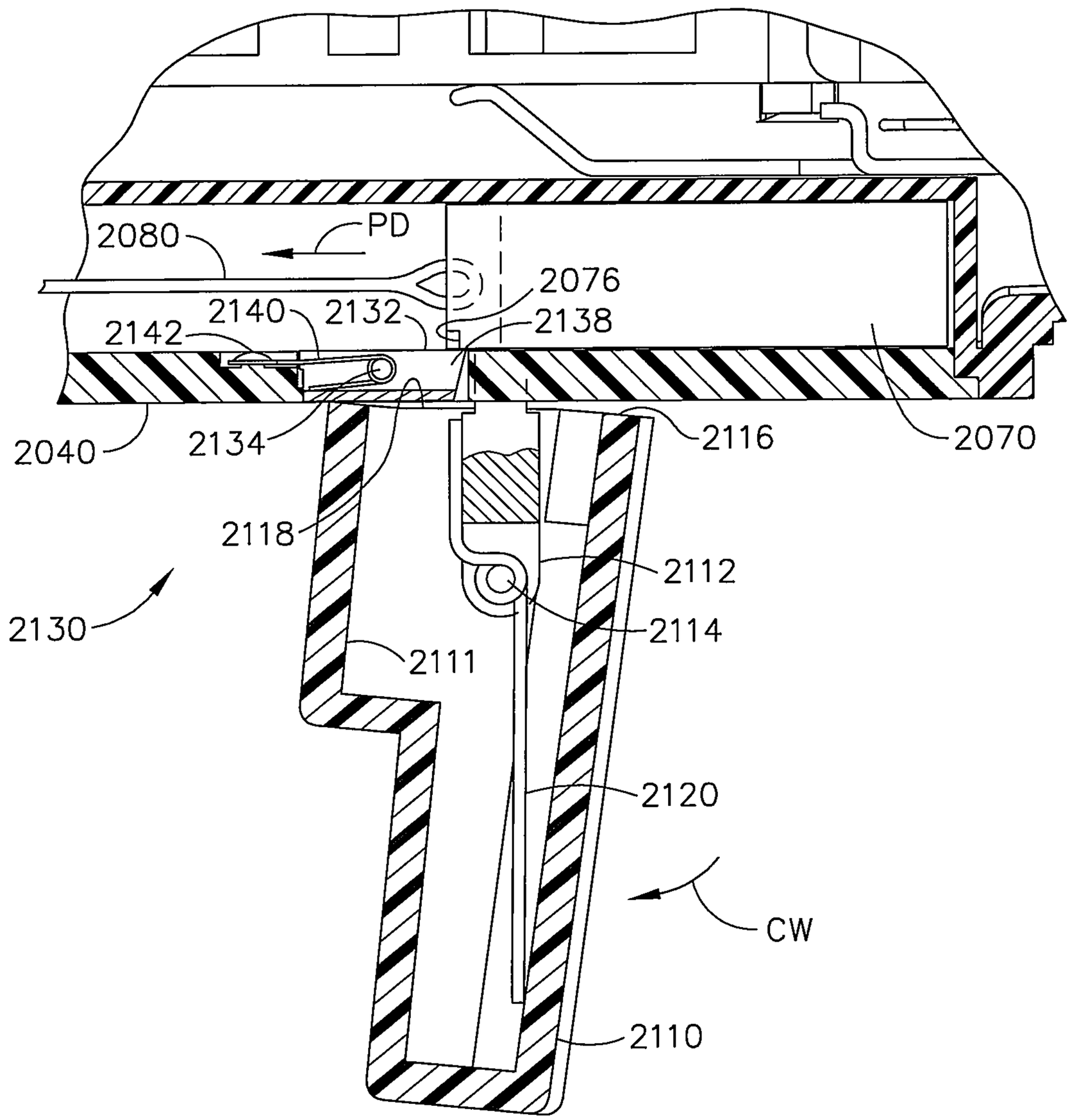
2080
PD
2076
2140
2132
2138
2142
2040
2134
2116
2070
2118
2112
2130
2114
2111
2120
CW
2110

FIG. 87

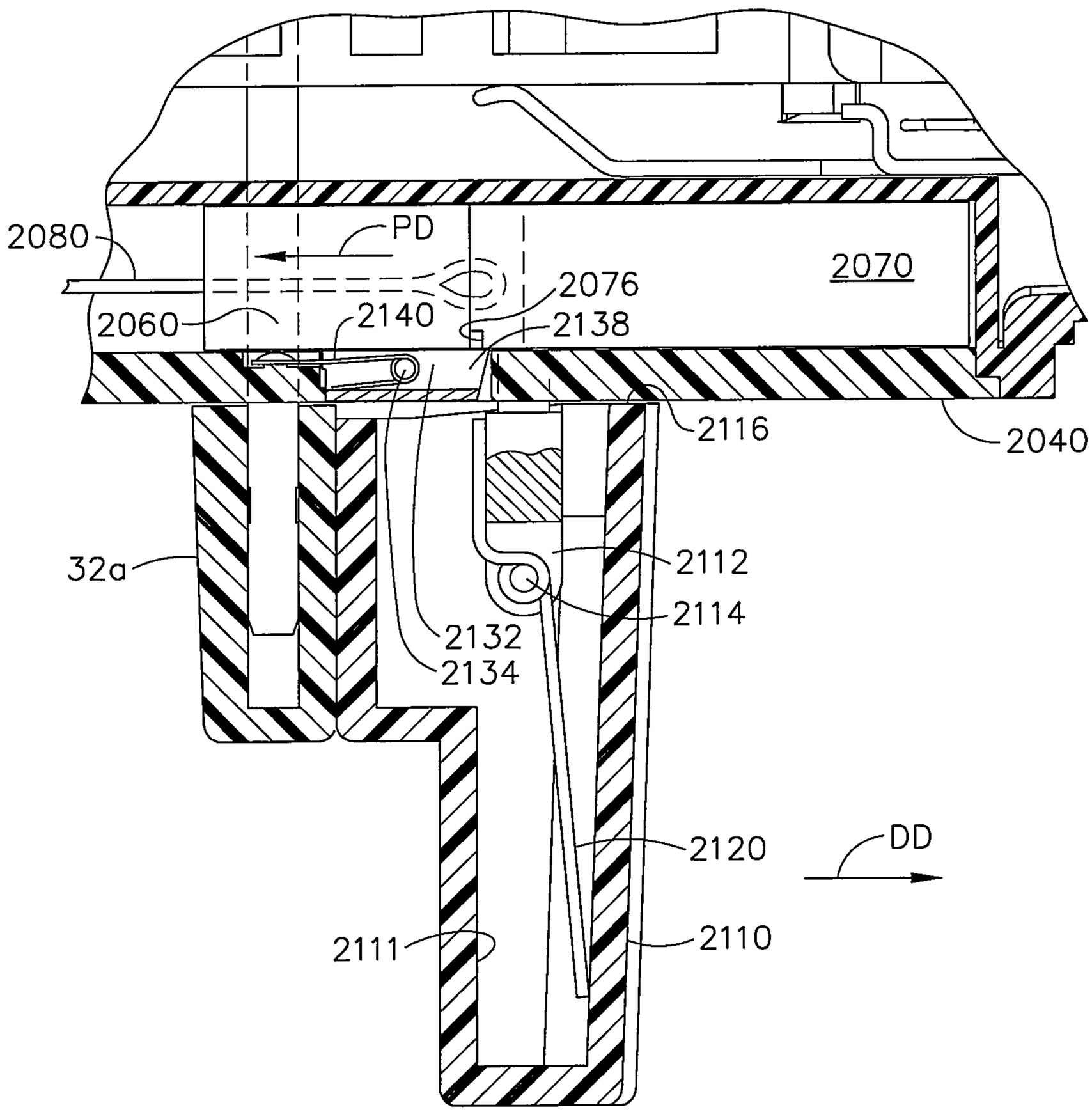
2080
PD
2070
2076
2060
2140
2138
2116
2040
32a
2112
2114
2132
2134
2120
DD
2111
2110

FIG. 88

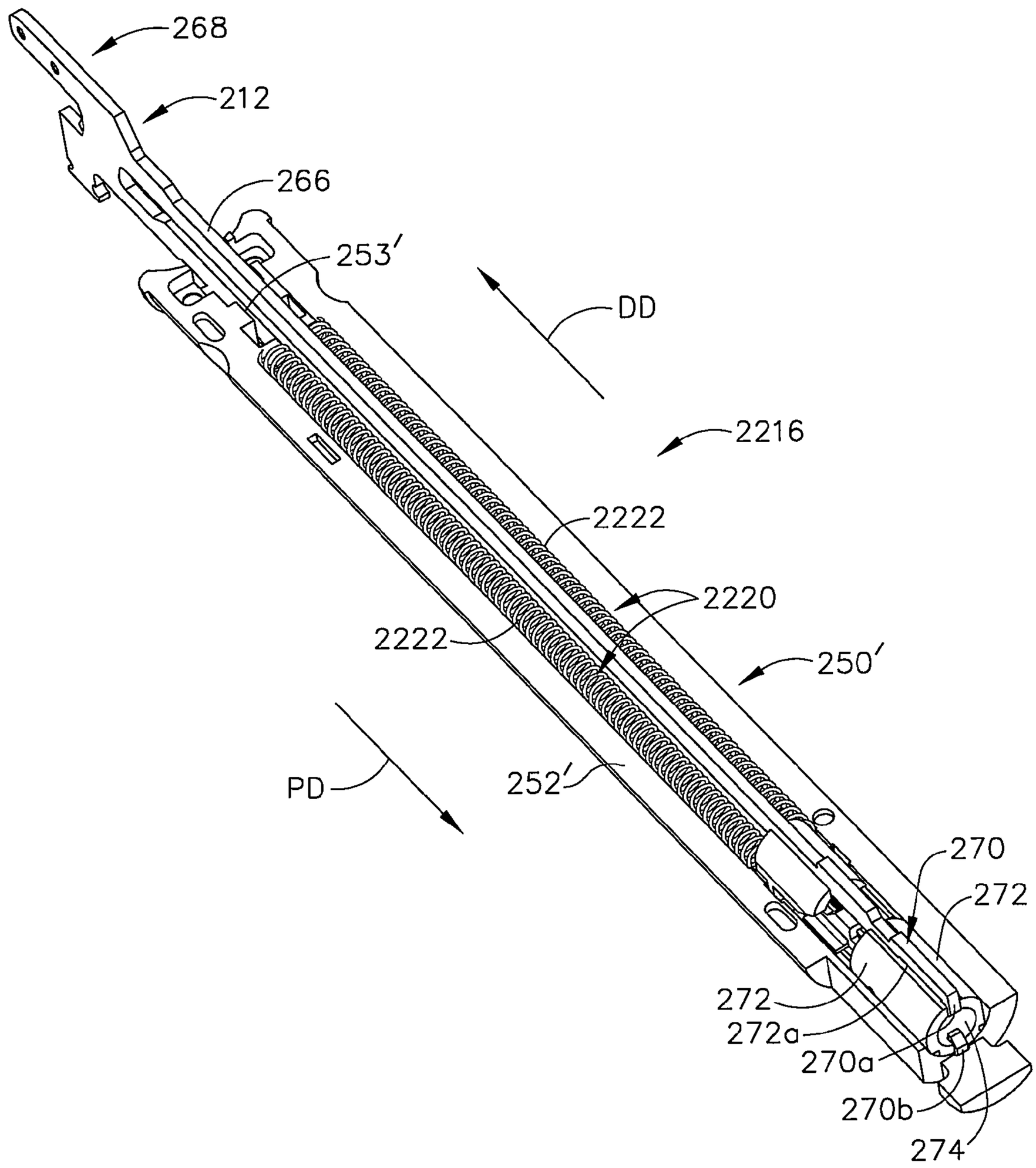
268
212
266
253′
DD
2216
2222
2220
2222
250′
PD
252′
270
272
272
272a
270a
270b
274

FIG. 89

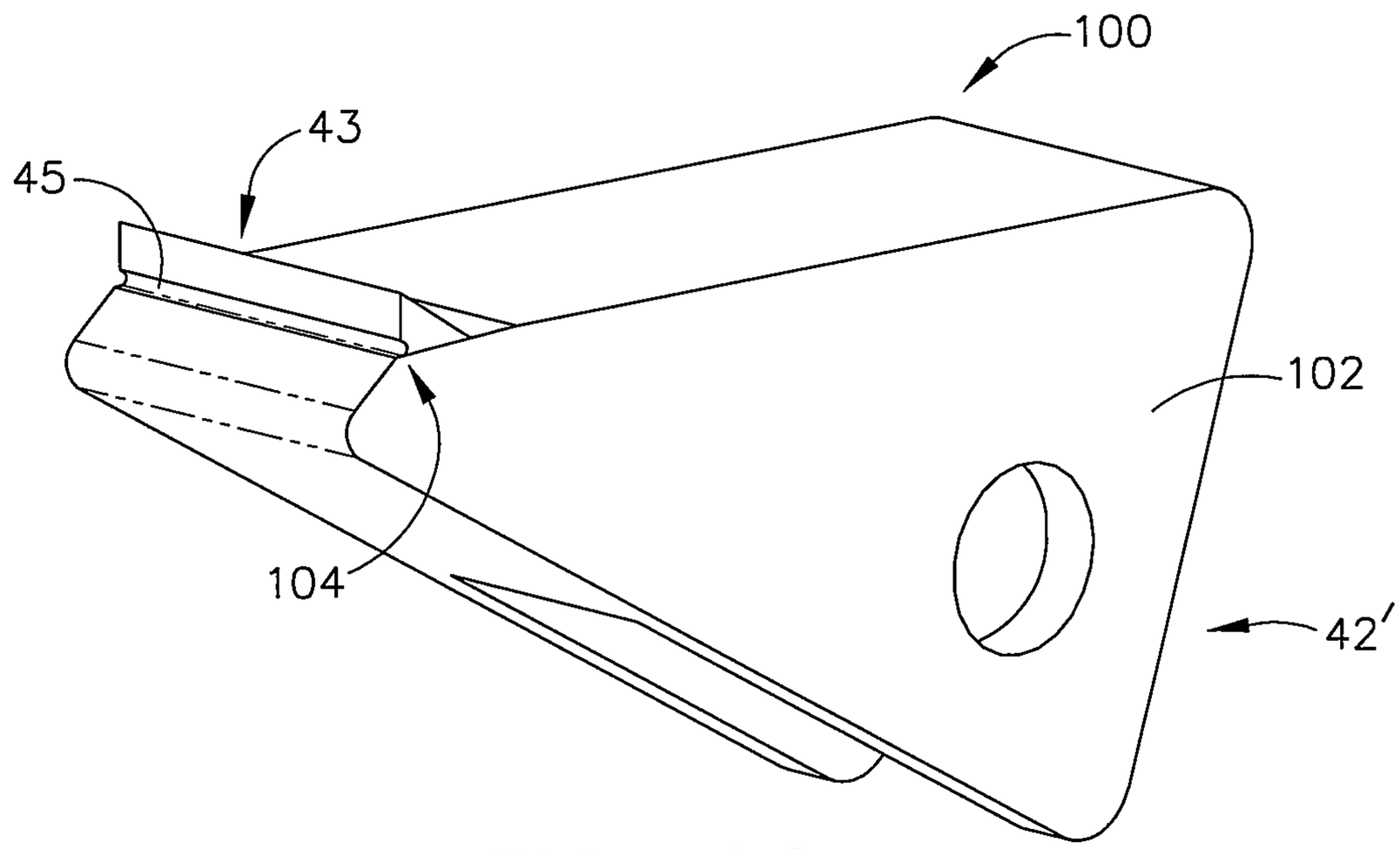

FIG. 90

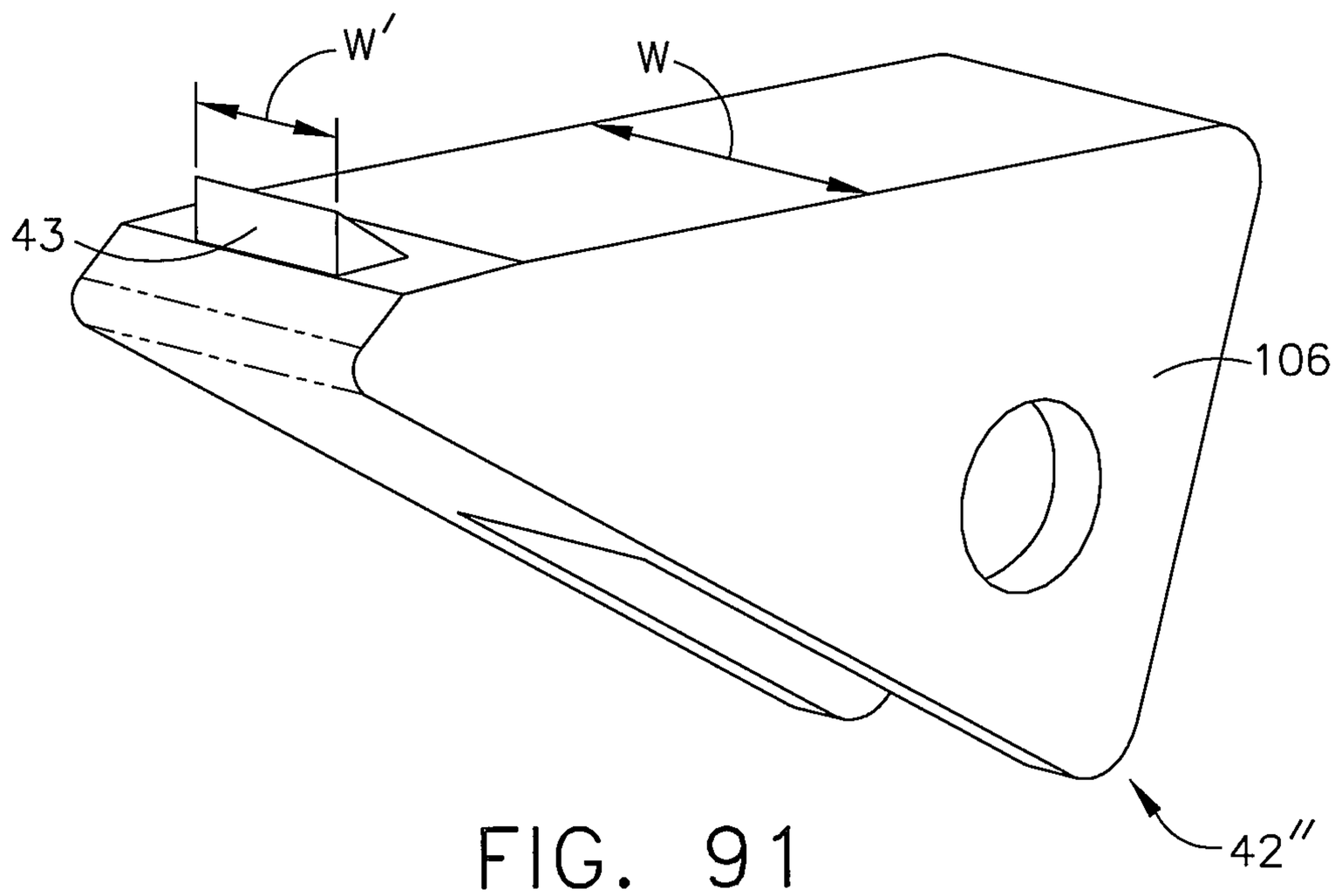

FIG. 91

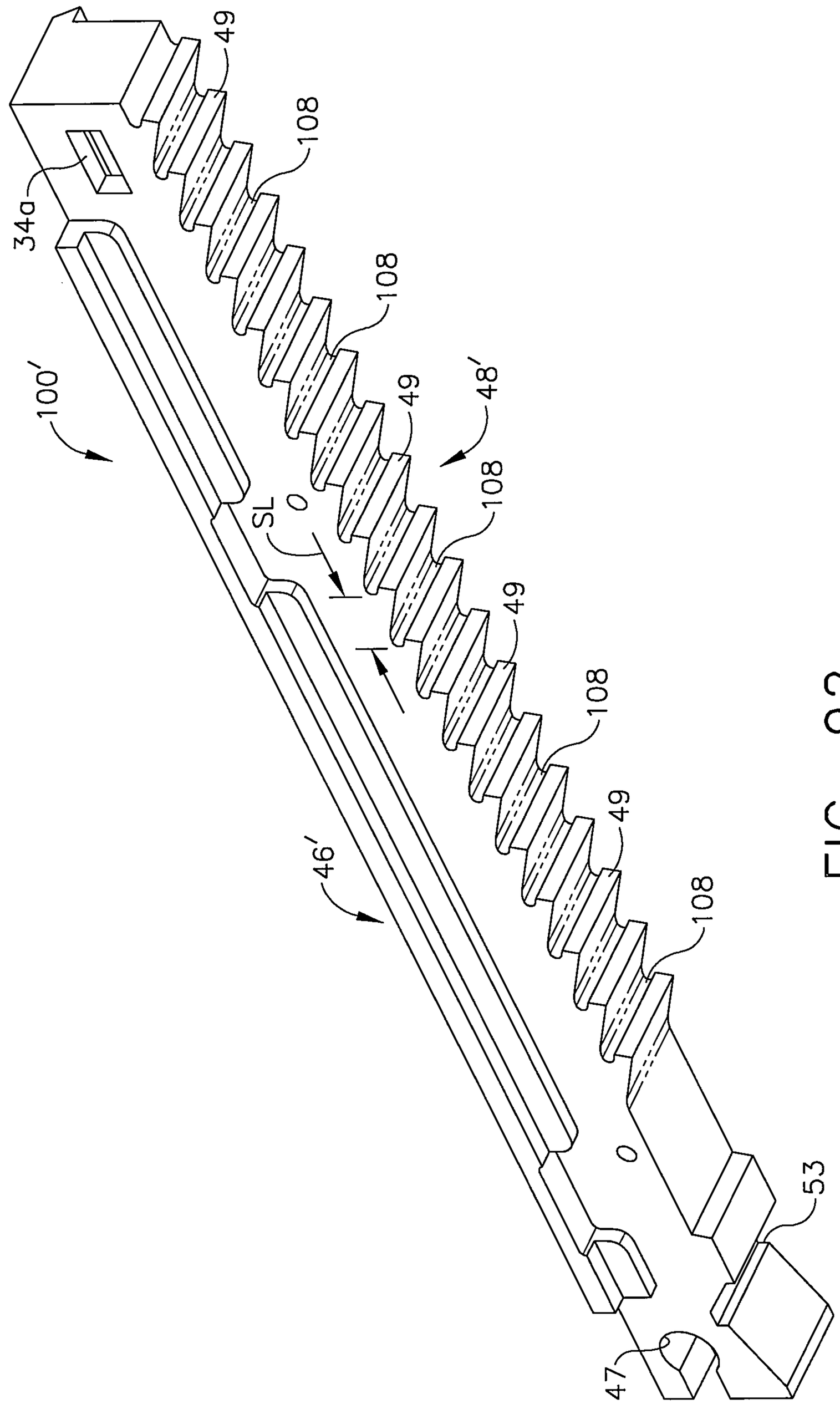

FIG. 92

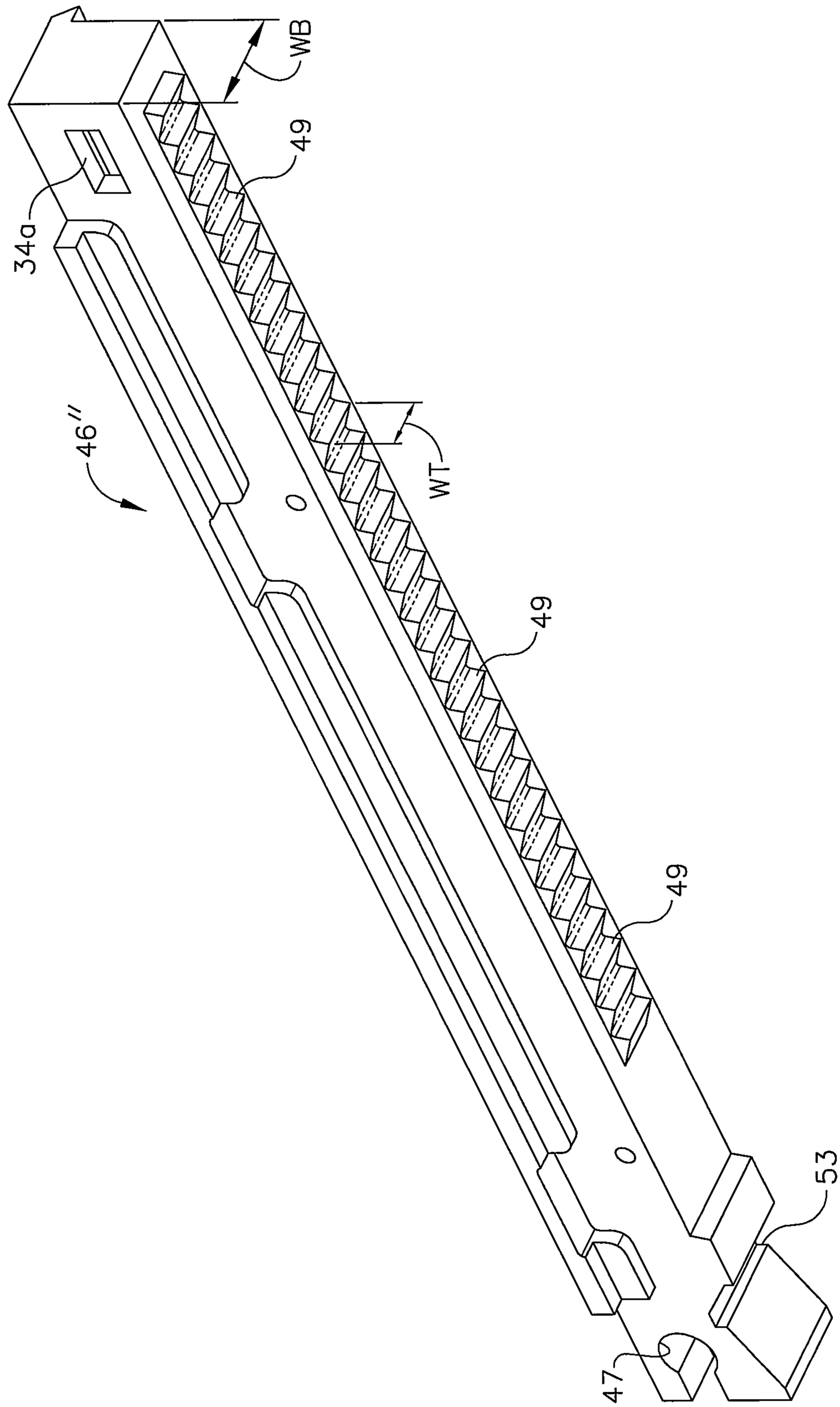

FIG. 93

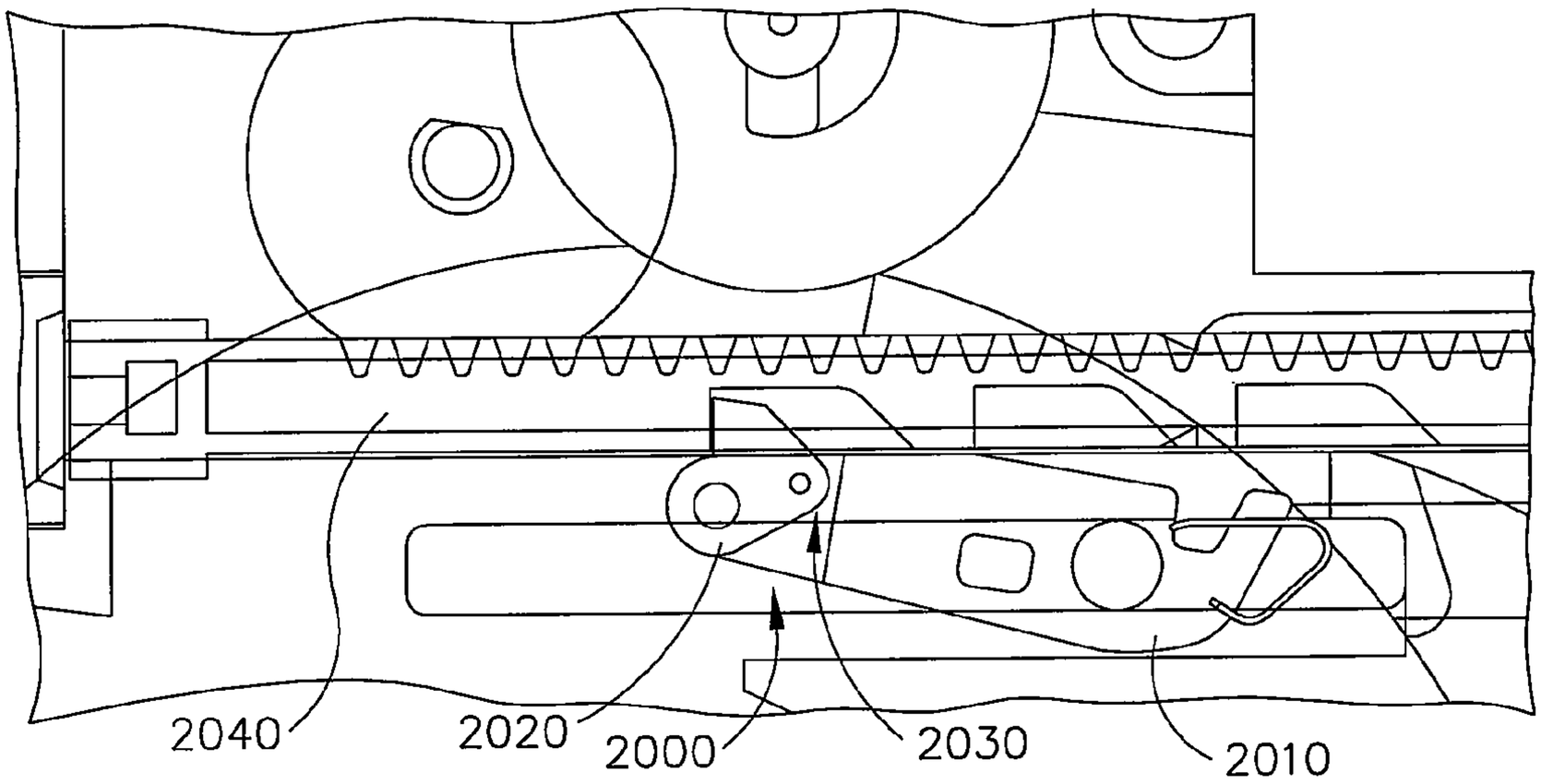

FIG. 93A

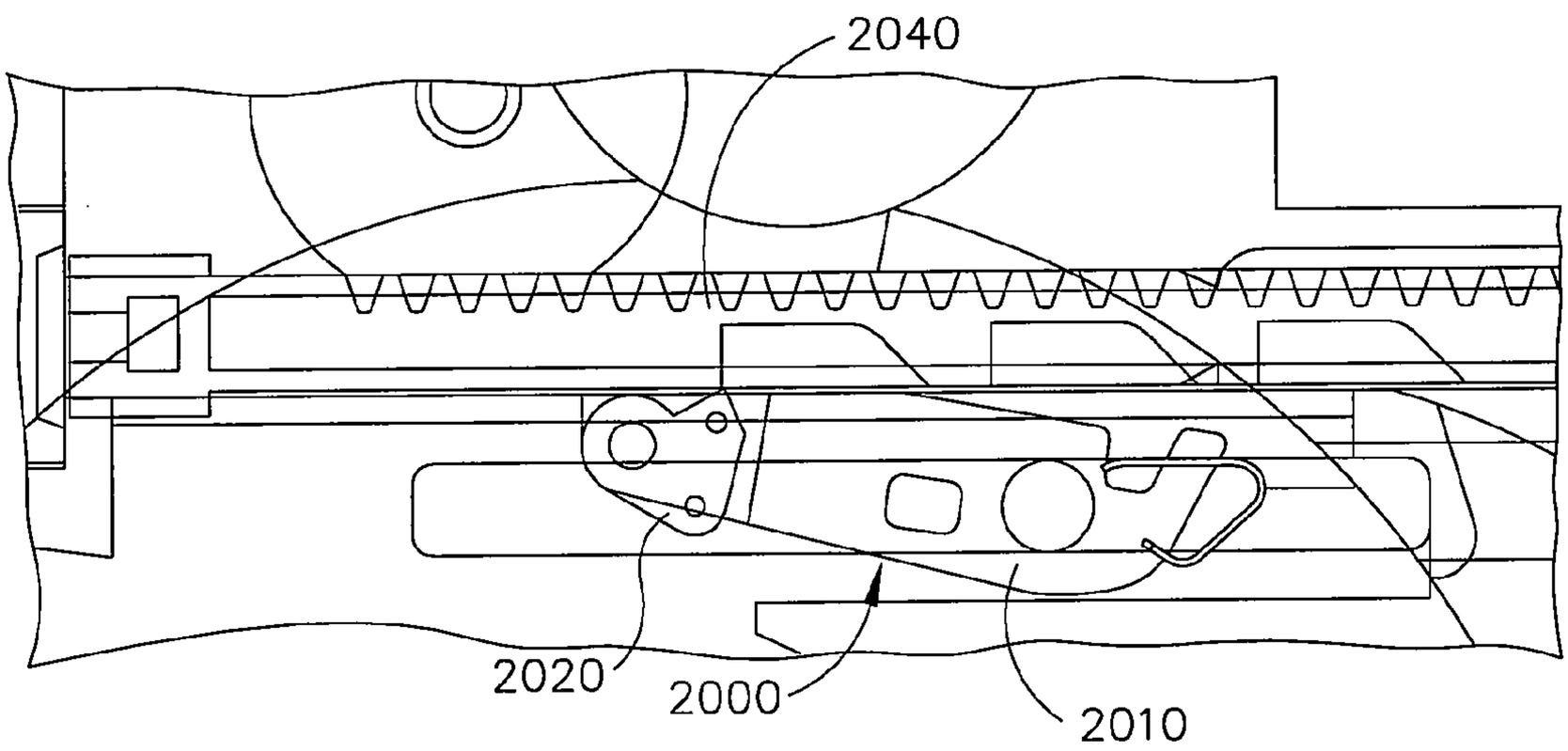

FIG. 93B

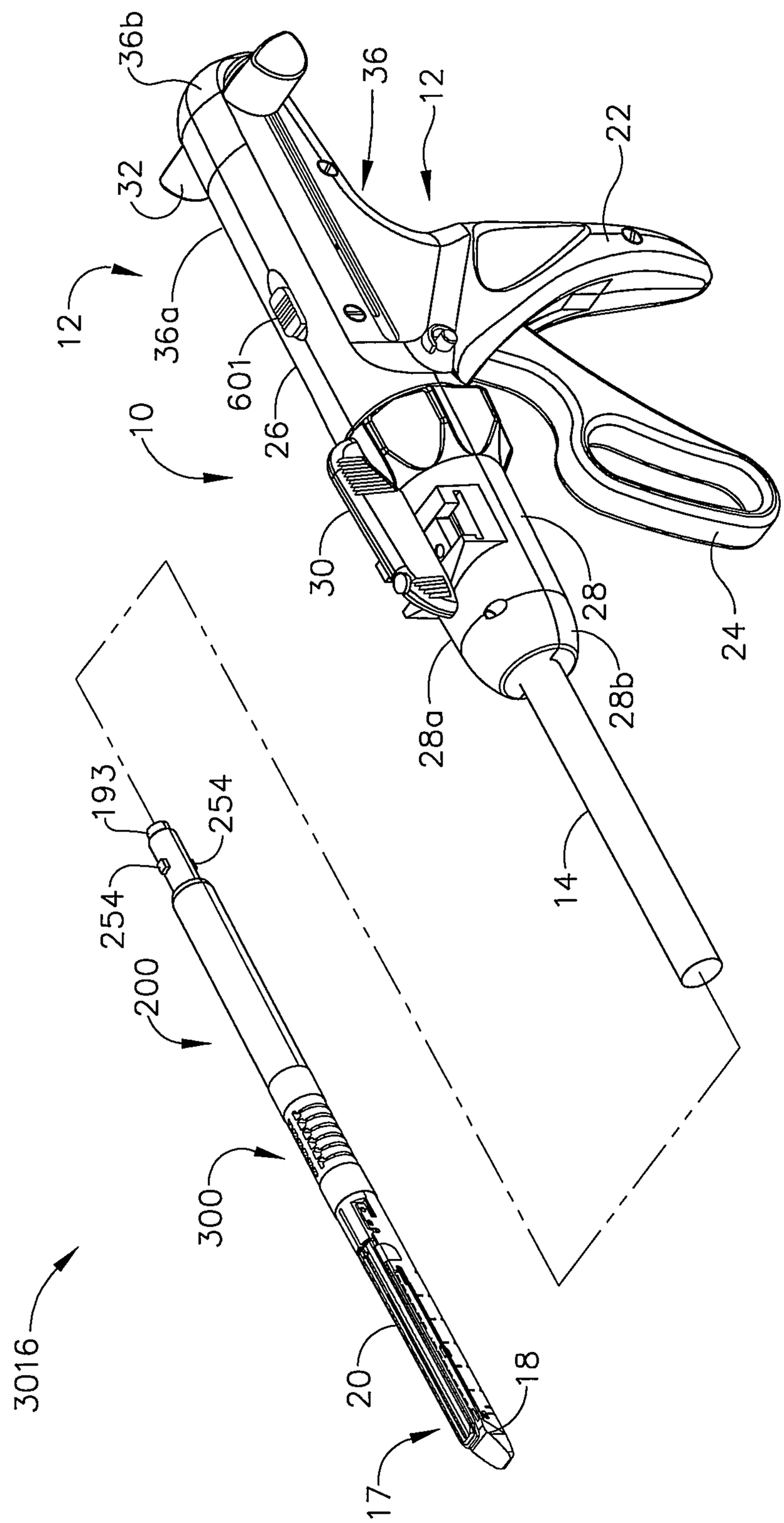
36b
36
12
22
32
12
36a
601
26
10
30
28
24
28a
28b
193
254
254
200
14
300
3016
20
18
17

FIG. 94

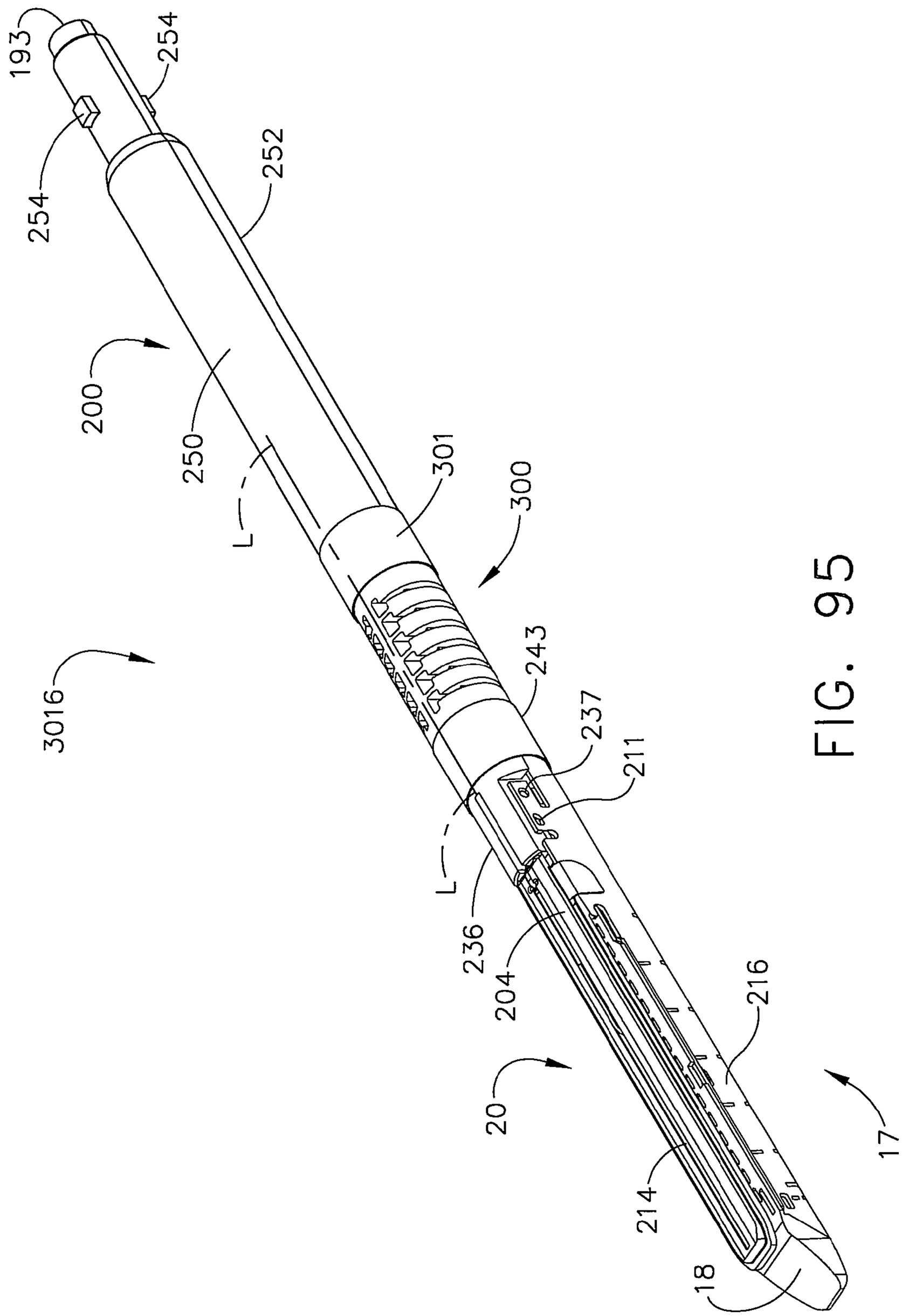
193
254
254
252
200
250
L
301
300
3016
243
237
211
L
236
204
216
20
17
214
18

FIG. 95

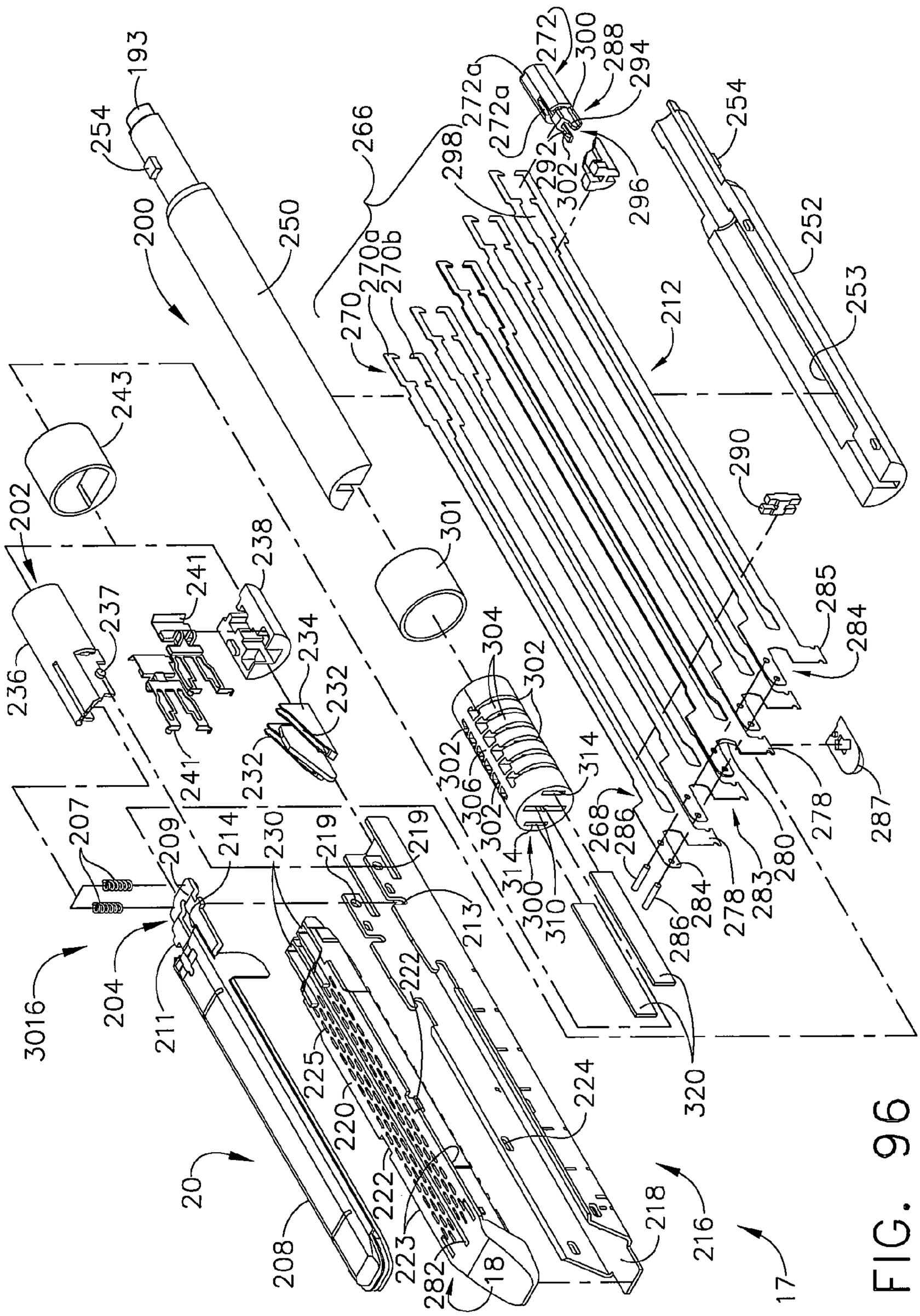
193
254
200
250
266
270
270a
270b
272
272a
272a
298
300
288
294
292
302
296
254
252
253
212
243
202
290
301
238
241
237
236
234
232
232
241
304
302
302
306
302
314
314
300
310
268
286
284
286
278
283
280
278
287
285
284
207
209
214
230
219
219
213
222
3016
204
211
225
220
222
223
224
320
20
208
282
18
218
216
17

FIG. 96

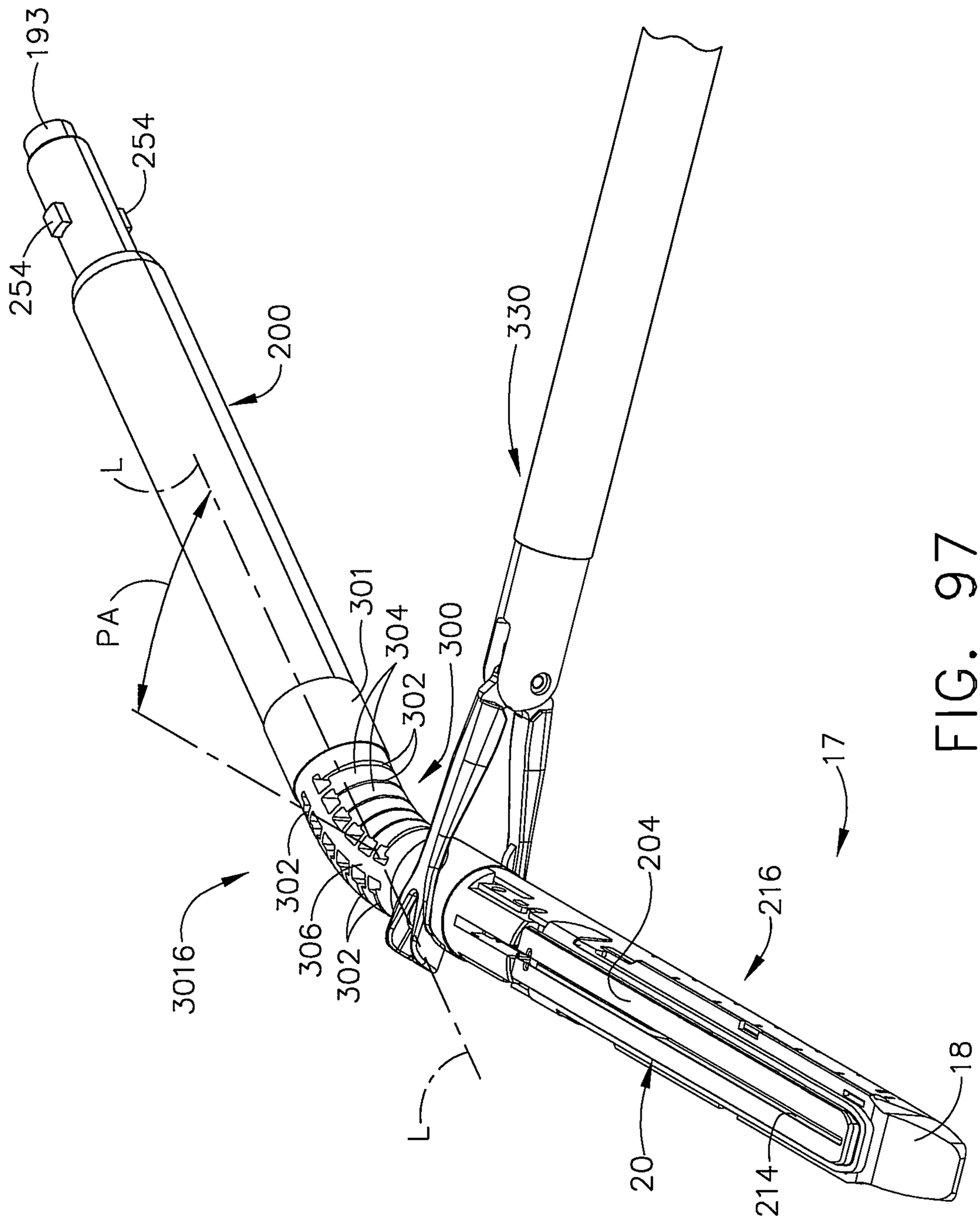
193
254
254
200
330
L
PA
301
304
300
302
302
306
302
3016
204
216
17
L
20
214
18

FIG. 97

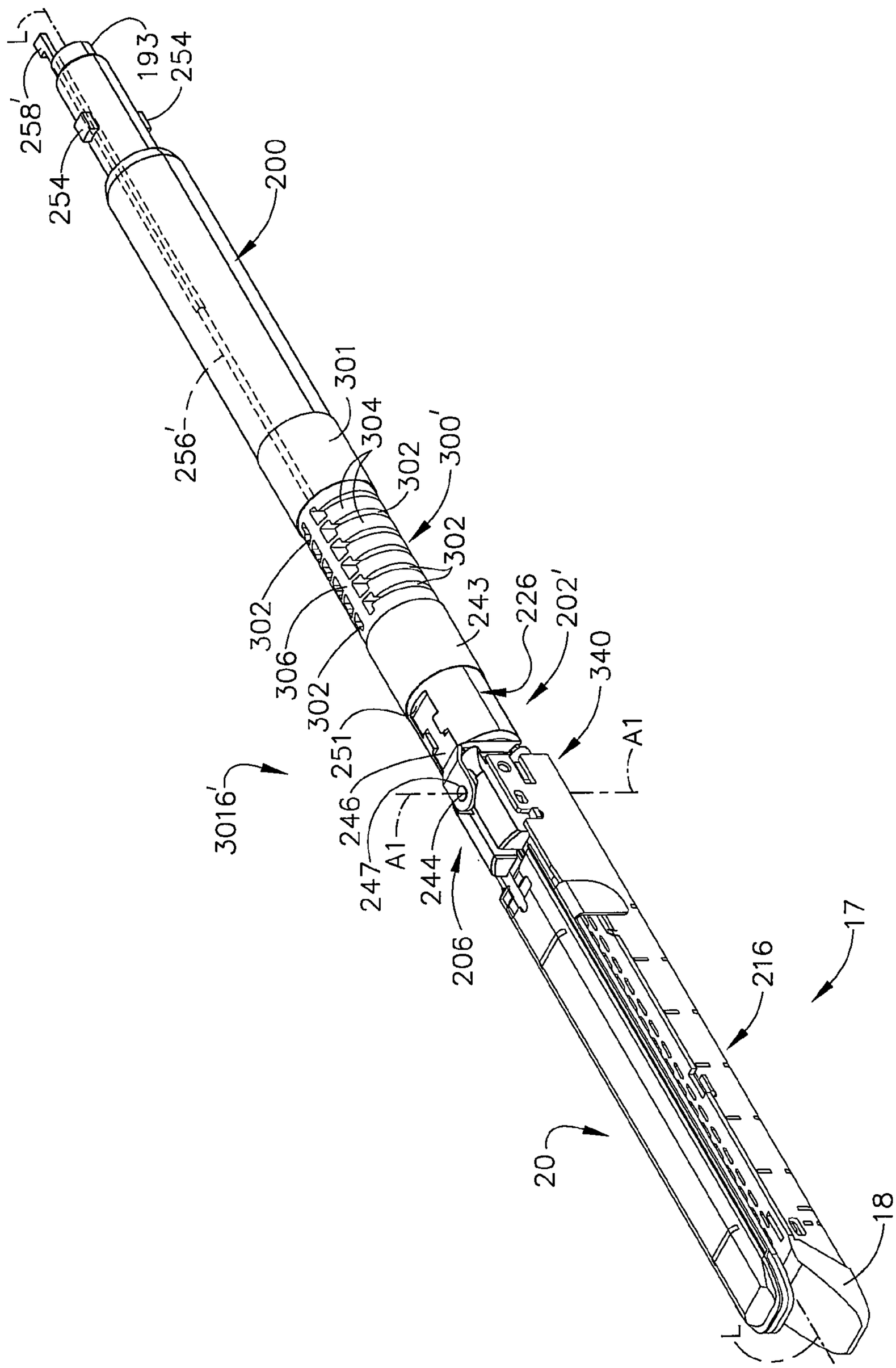
L
258'
254
193
254
200
256'
301
304
302
300'
302
302
306
302
243
226
202'
340
251
A1
3016'
246
247
A1
244
206
216
17
20
18
L

FIG. 98

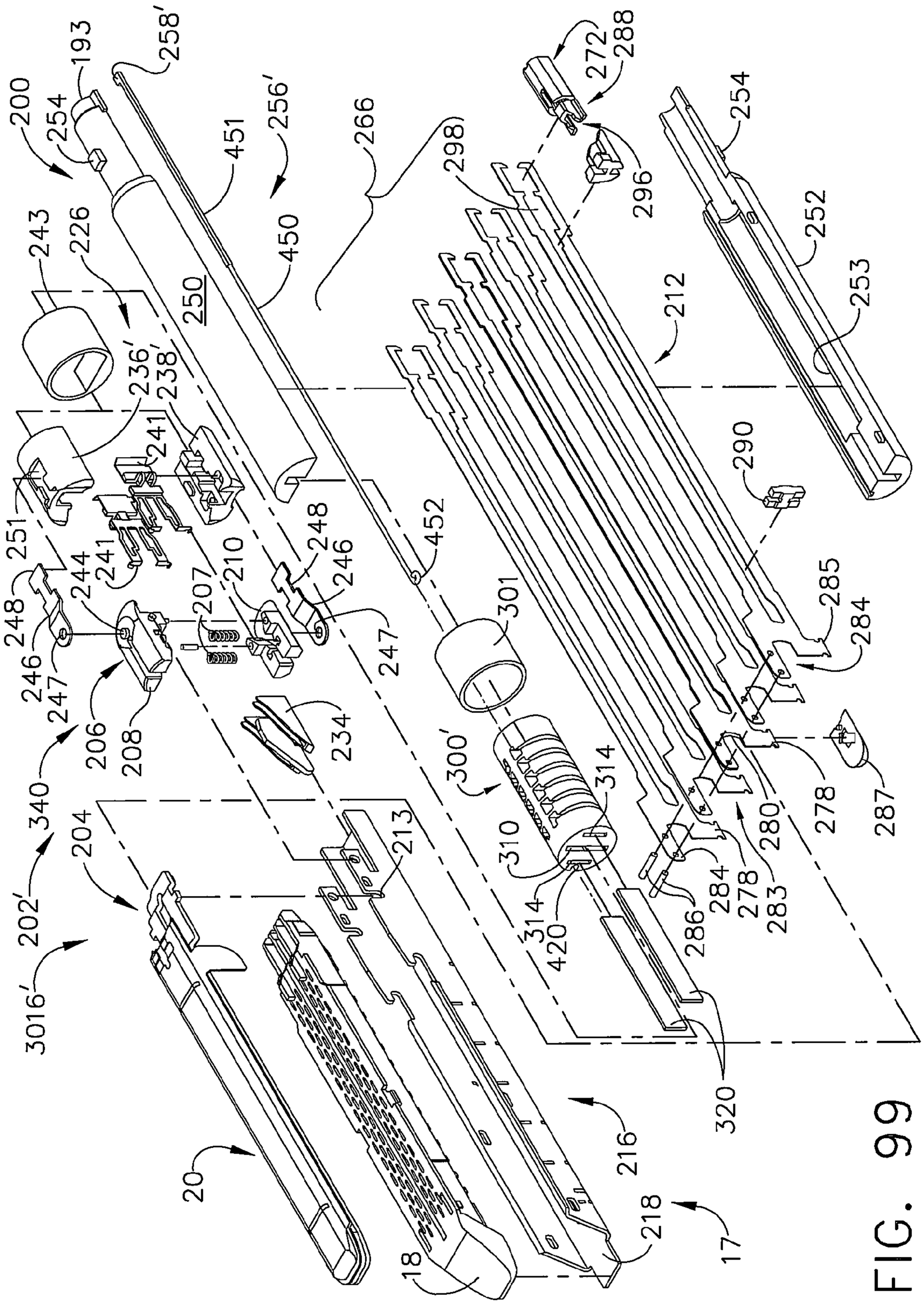
200
254
193
258'
256'
451
266
298
272
288
296
254
252
253
212
243
226
250
450
236'
238'
241
251
248
244
241
210
207
248
246
452
290
285
284
301
246
247
206
208
247
234
300'
314
310
213
204
340
202'
3016'
314
420
286
284
278
283
280
278
287
320
216
218
17
20
18

FIG. 99

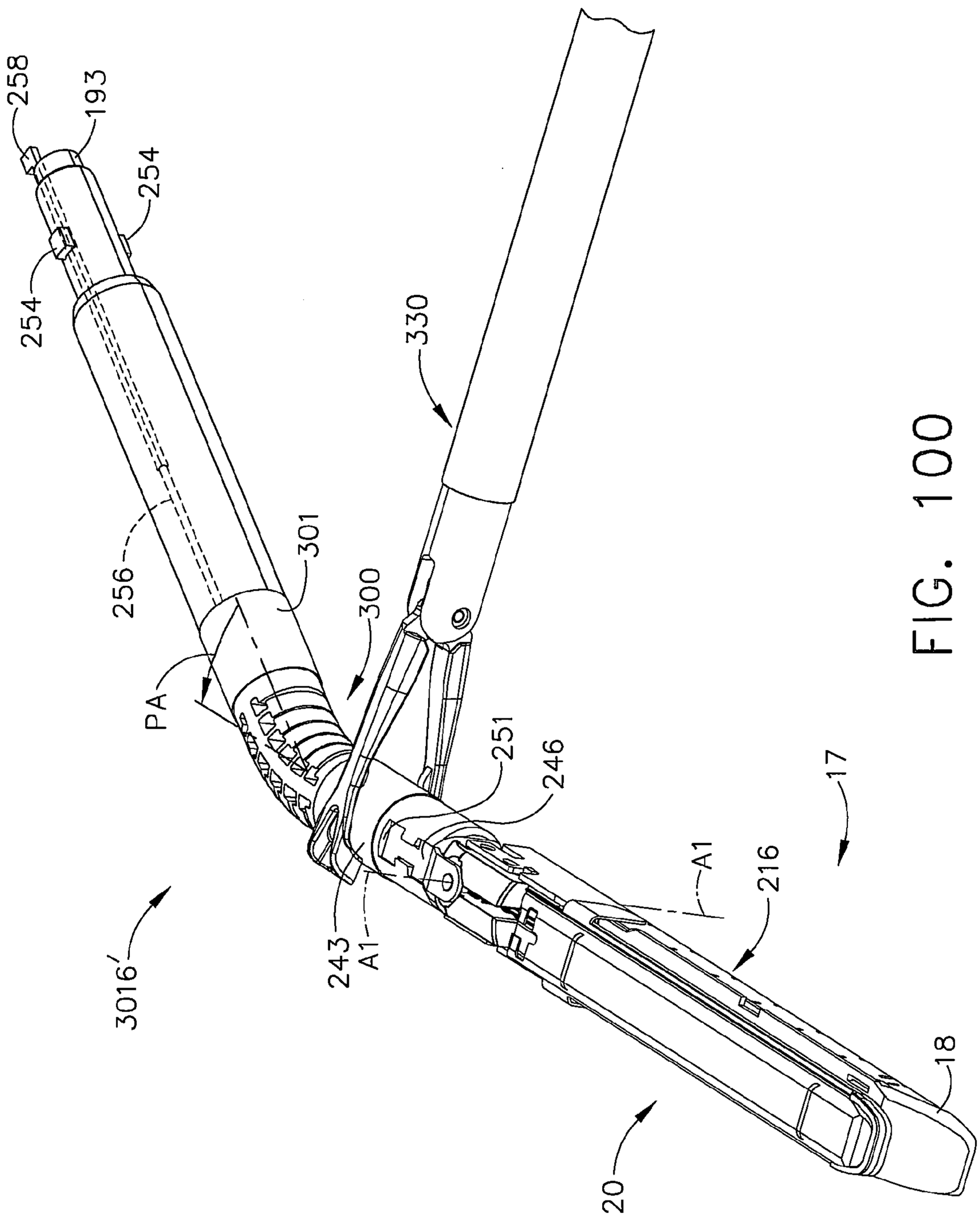
258
193
254
254
330
256
301
300
PA
251
246
17
A1
216
243
A1
3016'
18
20

FIG. 100

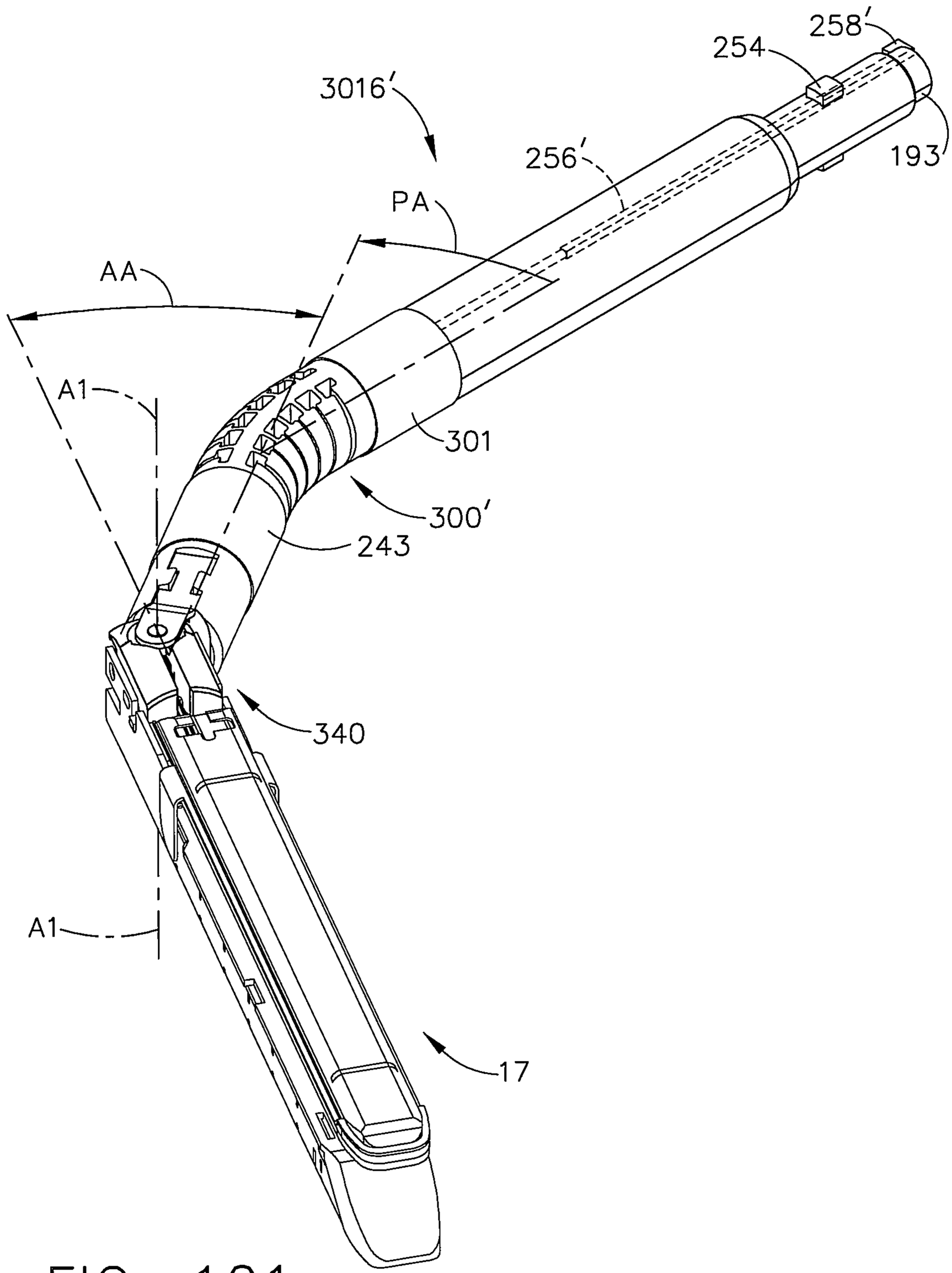

FIG. 101

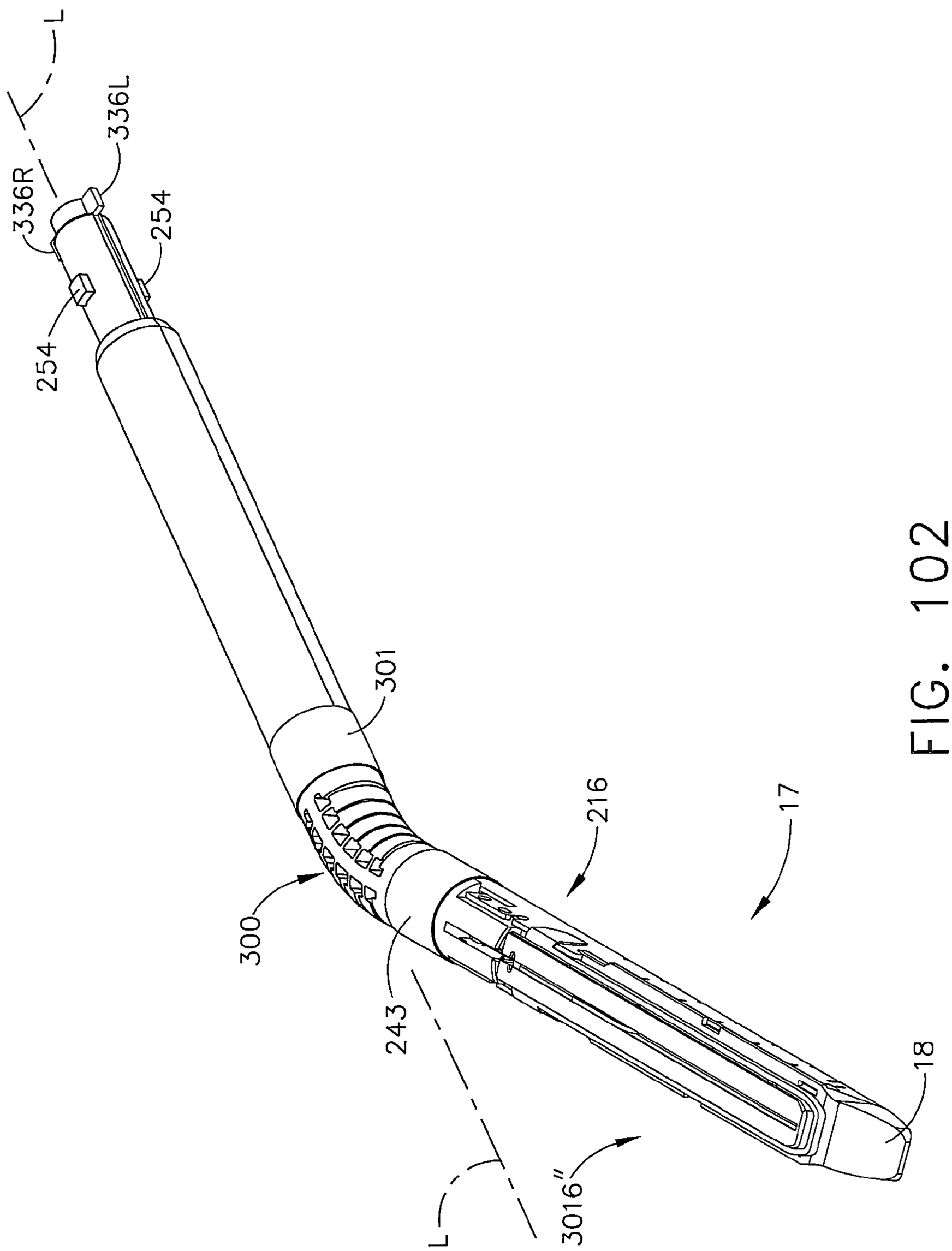

FIG. 102

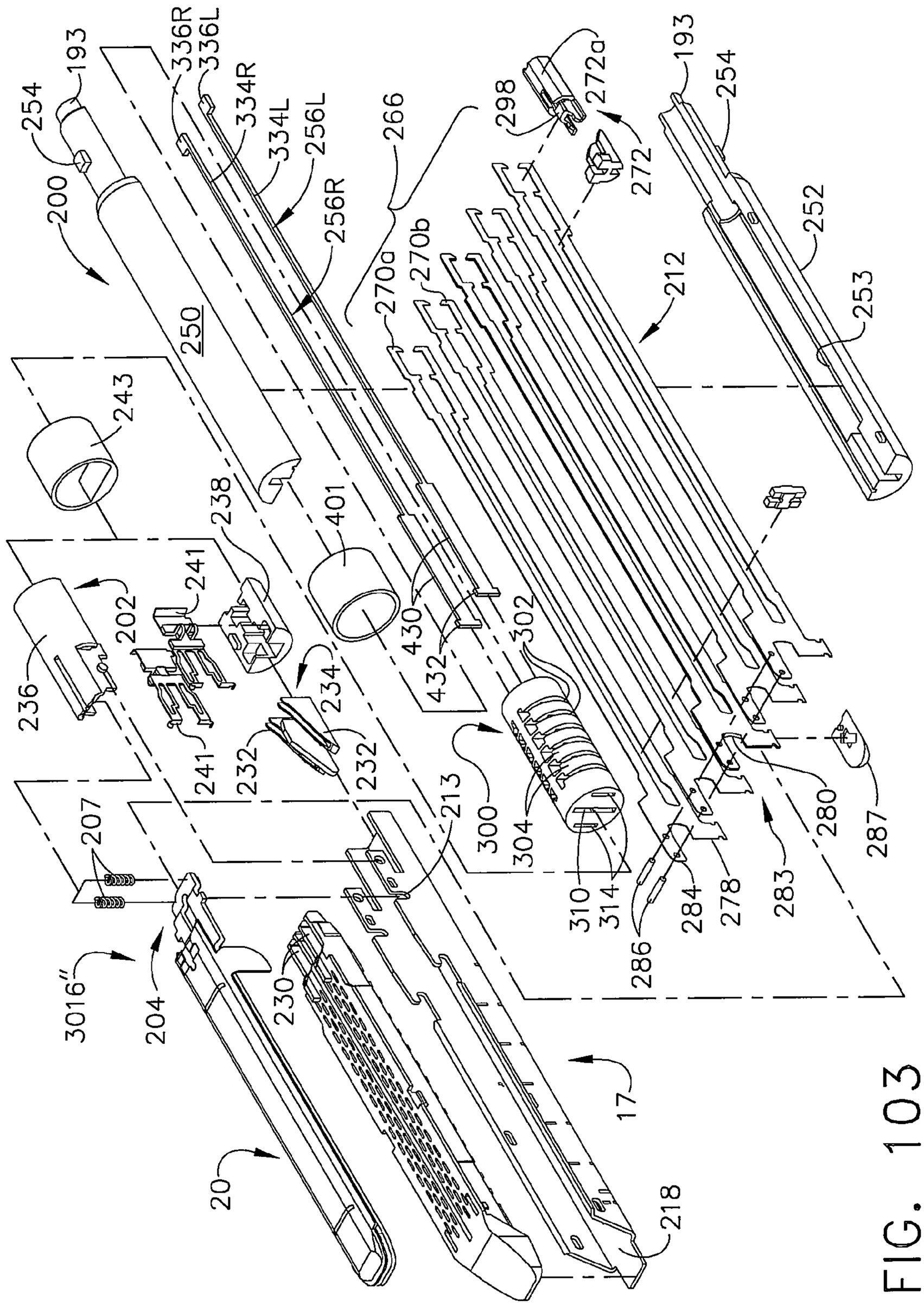
254
193
200
250
336R
336L
334R
334L
256L
256R
266
270a
270b
298
272a
272
193
254
252
253
212
243
238
401
241
202
236
430
432
302
234
232
232
241
213
300
304
310
314
286
284
278
283
280
287
207
3016"
204
230
20
17
218

FIG. 103

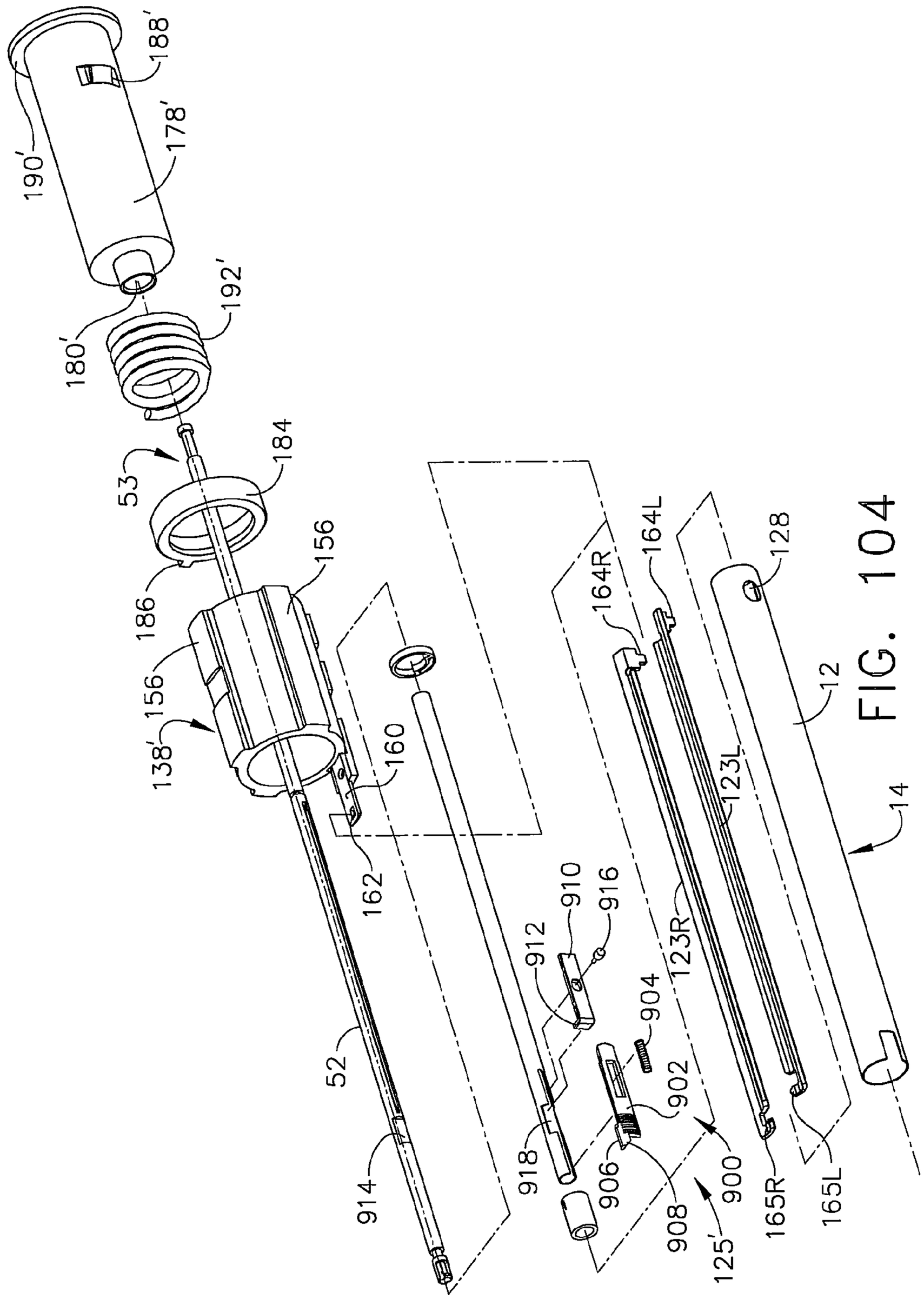
188'
178'
190'
192'
180'
184
53
186
156
156
138'
160
162
52
914
918
912
910
916
904
902
906
908
900
125'
123R
123L
164R
164L
165R
165L
128
12
14

FIG. 104

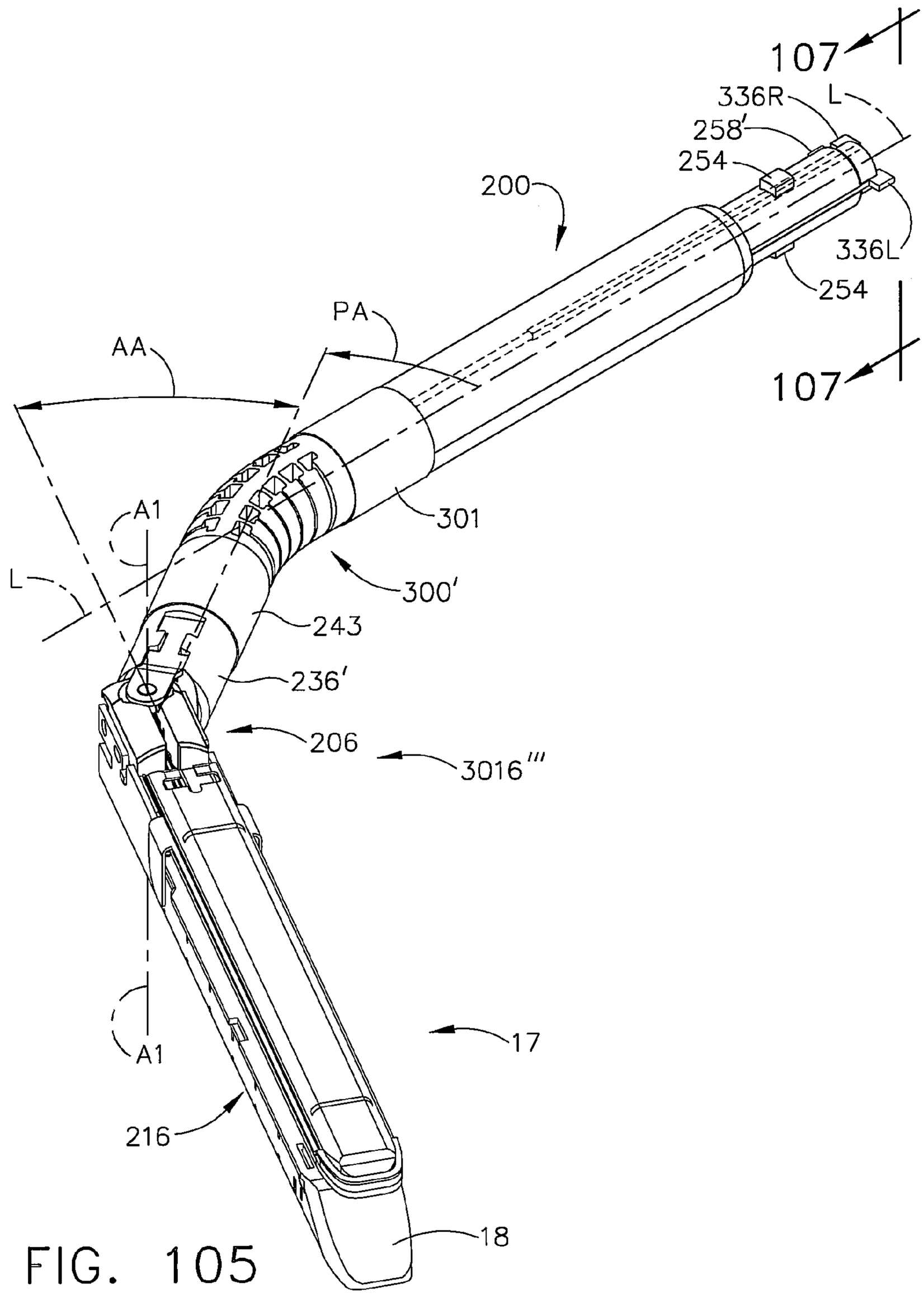
107
336R
L
258'
254
200
336L
254
PA
AA
107
A1
301
L
300'
243
236'
206
3016'''
A1
17
216
18

FIG. 105

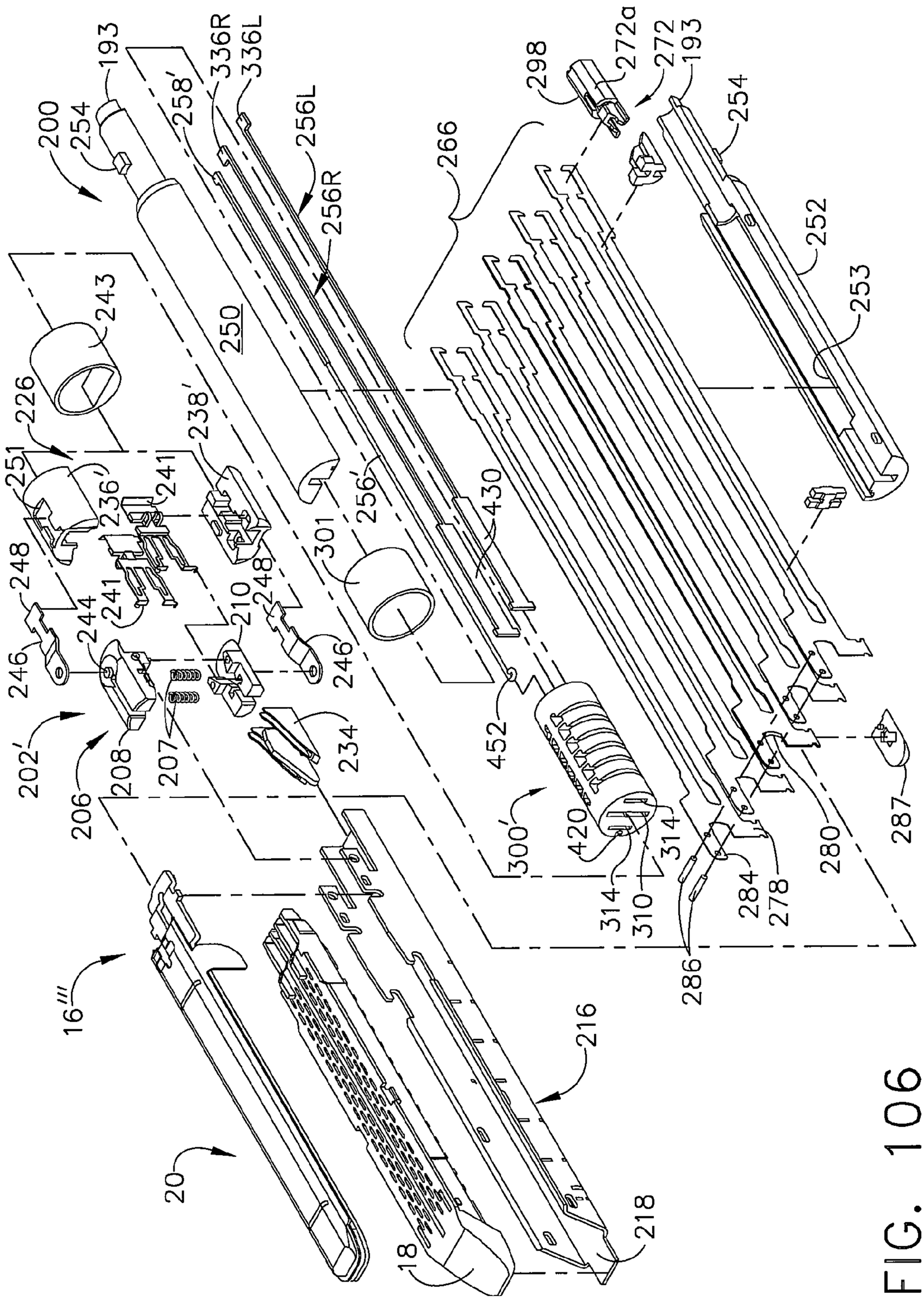
200
254
193
258'
336R
336L
256L
256R
250
243
226
251
236'
241
238'
248
244
246
210
202'
206
208
207
234
301
256'
430
452
266
298
272a
272
193
254
252
253
300'
420
314
310
284
278
280
287
286
16'''
20
18
216
218

FIG. 106

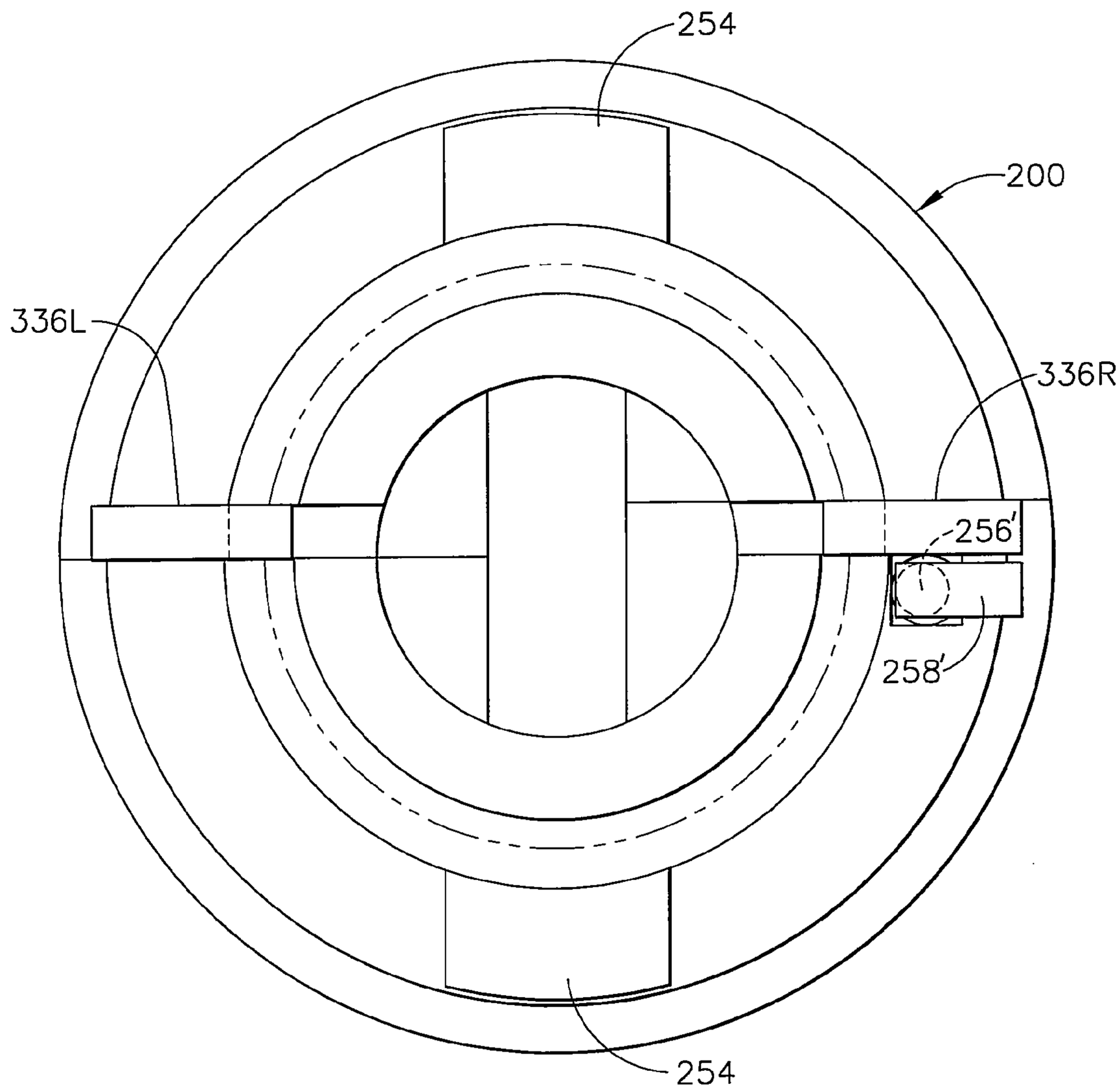

FIG. 107

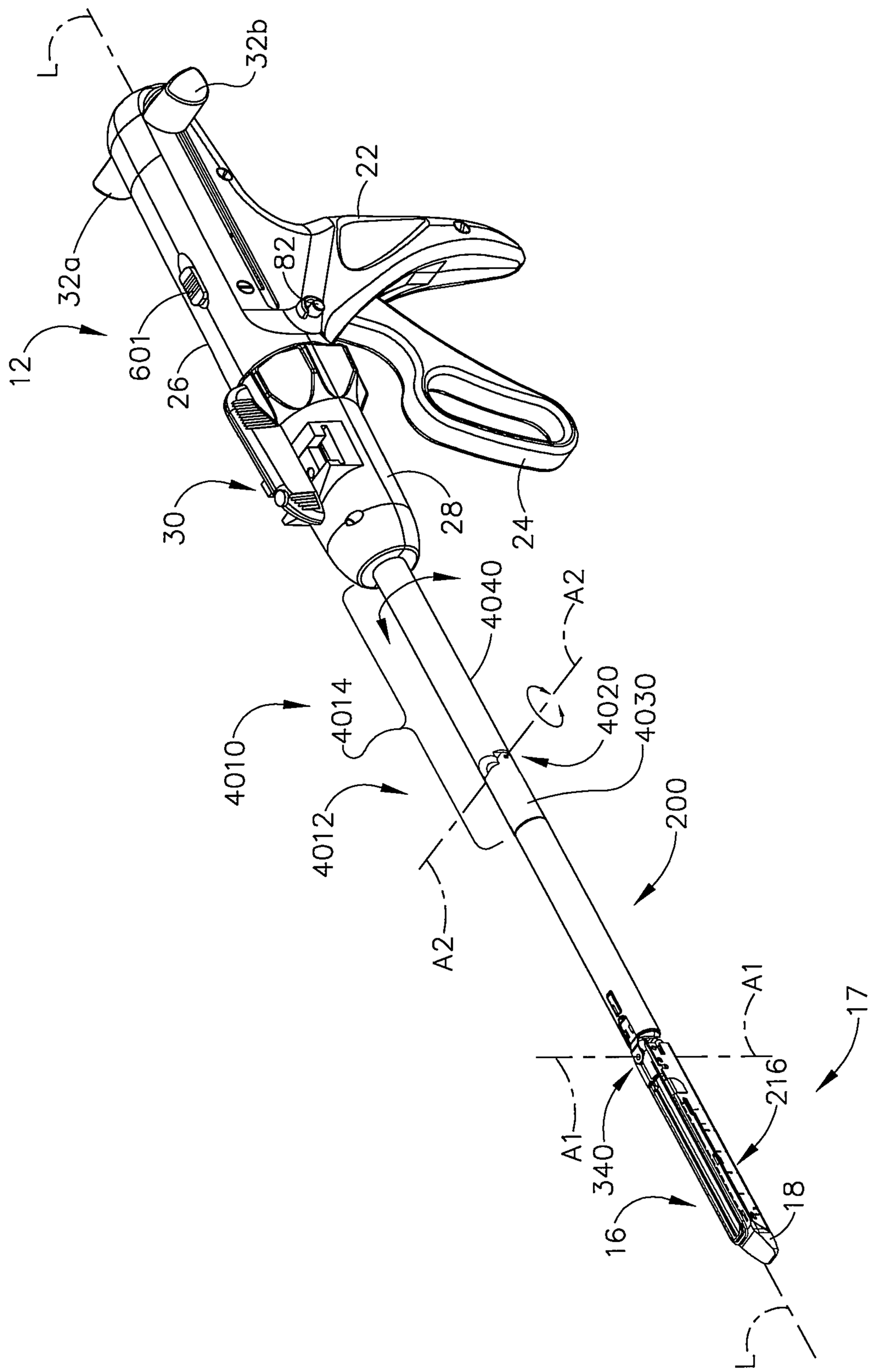
L
32b
22
32a
82
12
601
26
30
28
24
4040
A2
4014
4020
4030
4010
4012
200
A2
A1
17
216
A1
340
16
18
L

FIG. 108

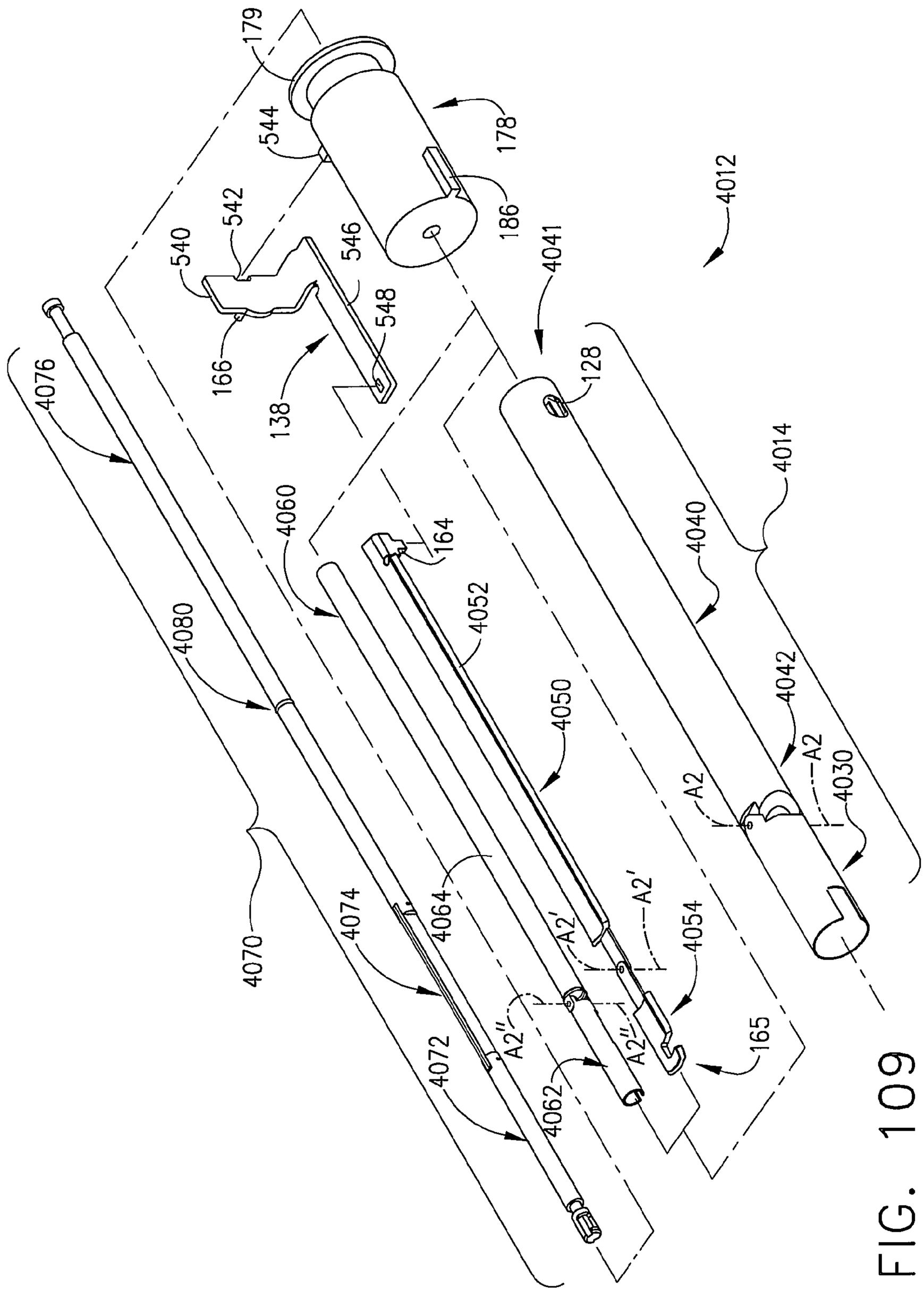
179
544
178
542
540
546
186
4041
4012
548
166
138
128
4076
4014
4040
4060
164
4052
4080
4042
4050
A2
4030
A2
4070
4074
4064
A2'
A2'
4054
A2''
A2''
165
4072
4062

FIG. 109

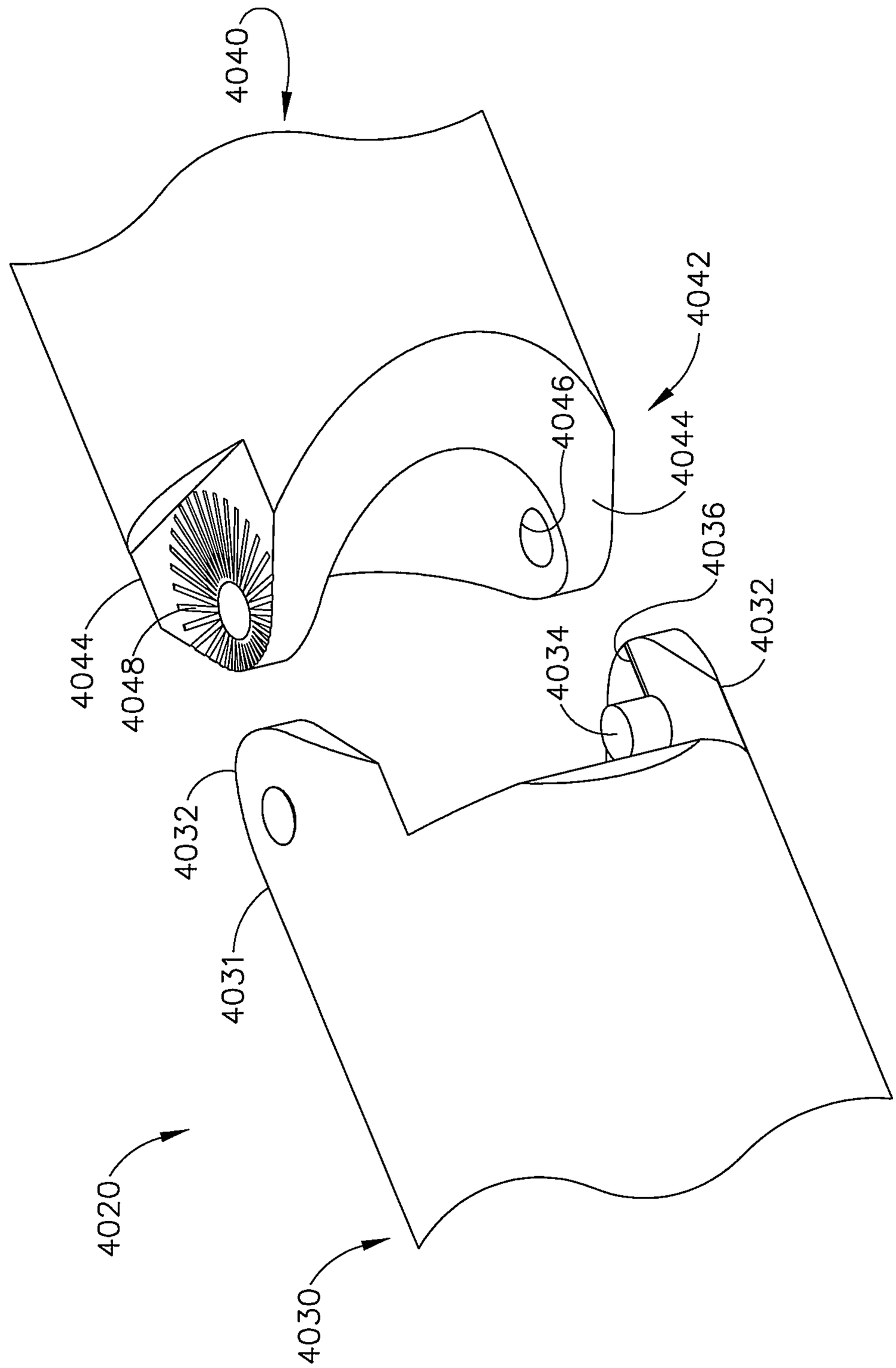
4040
4042
4046
4044
4036
4032
4034
4044
4048
4032
4031
4020
4030

FIG. 110

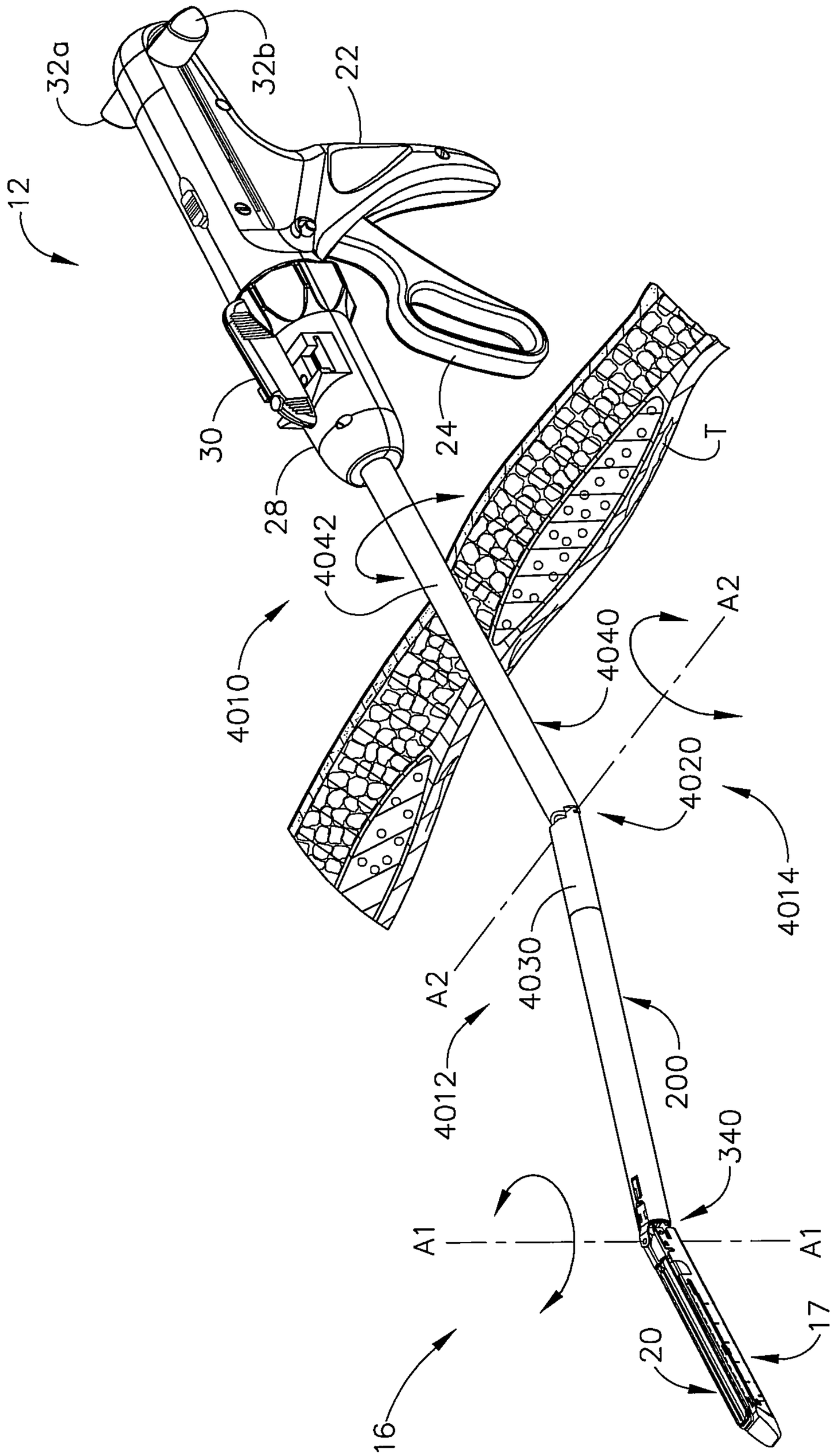
12
32a
32b
22
30
28
24
T
4042
4010
4040
A2
4020
4014
A2
4030
4012
2000
340
A1
A1
20
17
16

FIG. 111

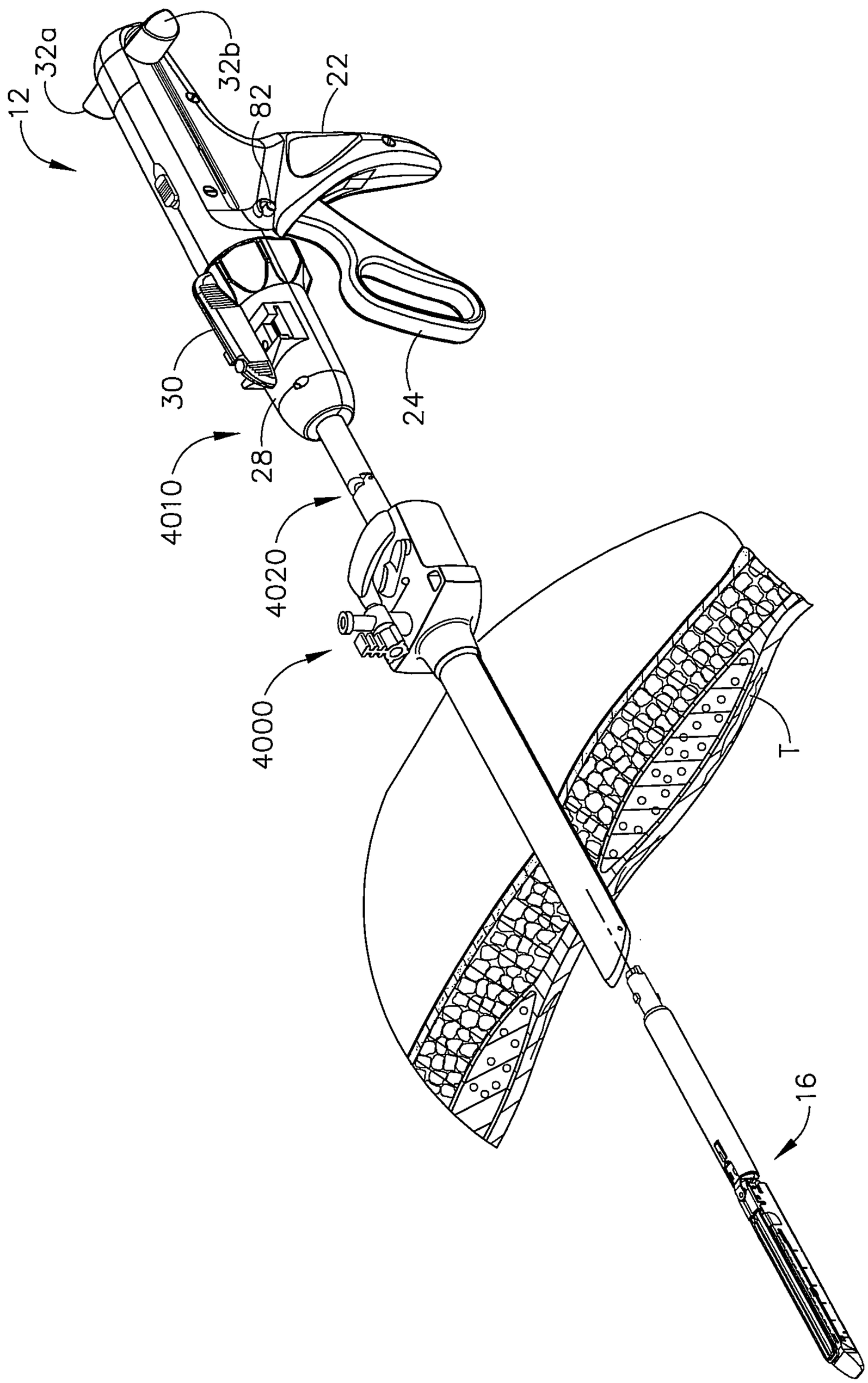

FIG. 112

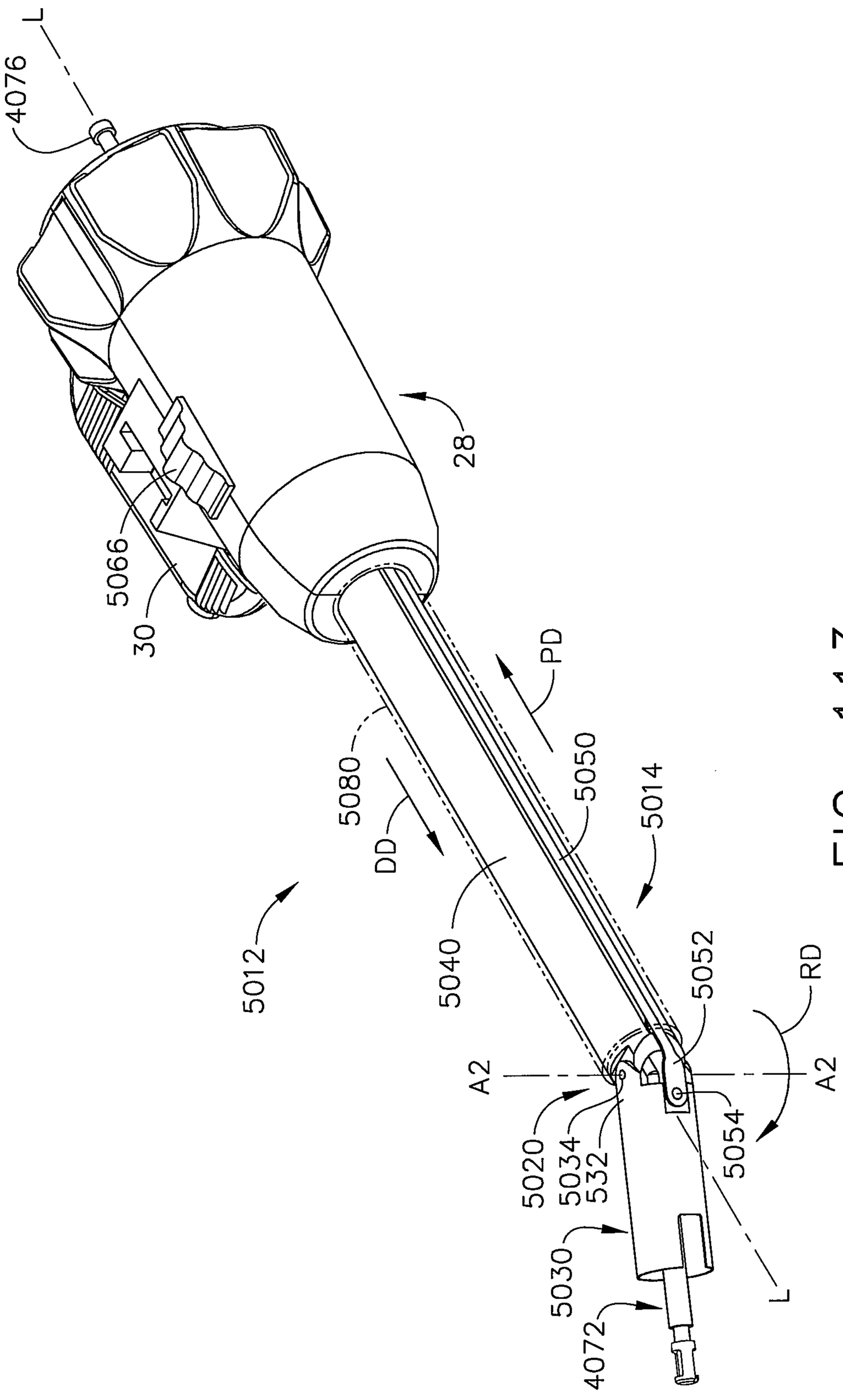
L
4076
28
5066
30
PD
5080
DD
5050
5014
5012
5040
5052
RD
A2
A2
5020
5034
532
5054
5030
4072
L

FIG. 113

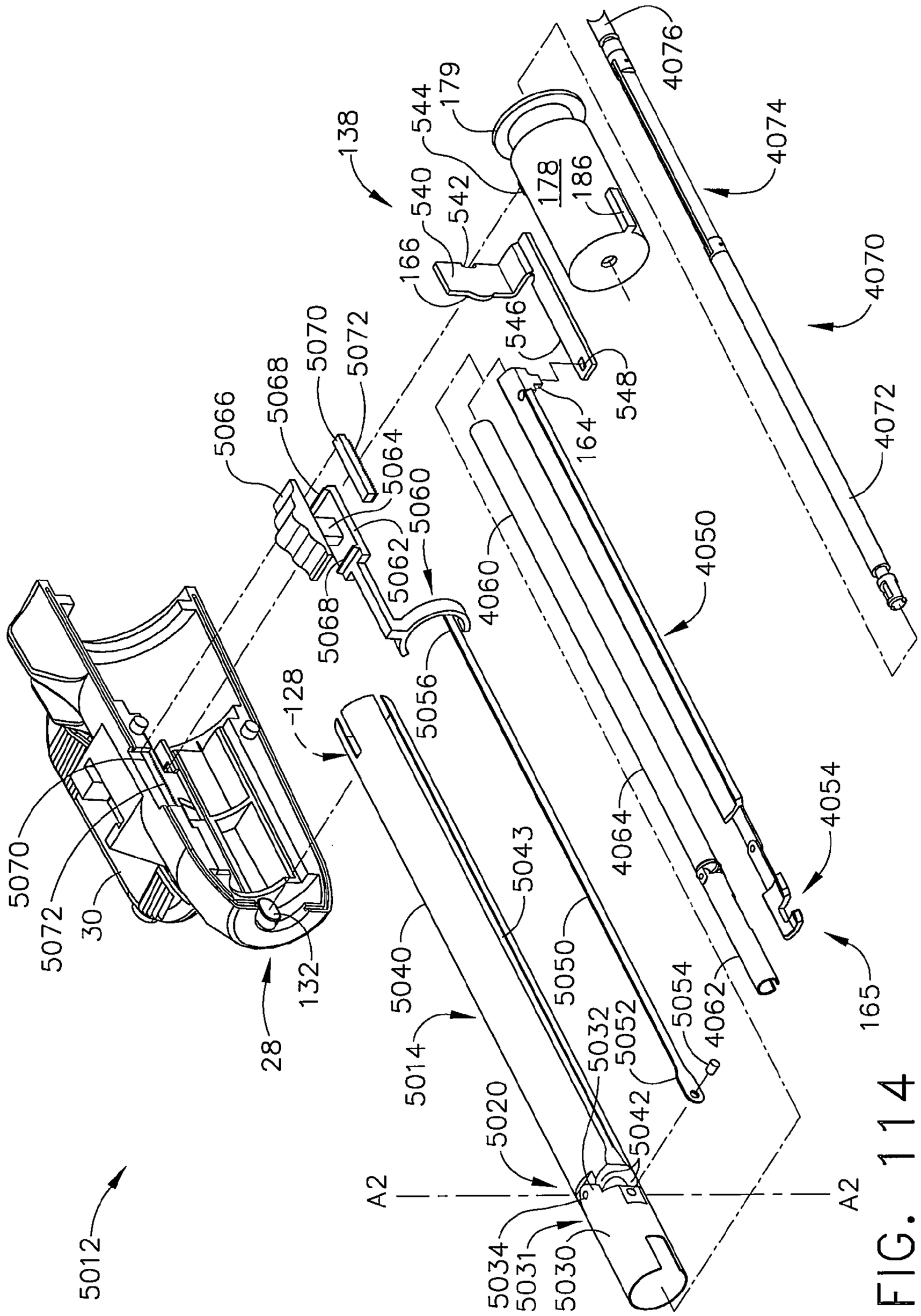
5012
5070
5072
30
28
132
128
5066
5068
5070
5072
5064
5060
5062
5068
5056
138
166
540
542
544
179
178
186
546
548
164
4076
4074
4070
4072
4050
4060
4064
4054
165
4062
5054
5052
5032
5042
5043
5050
5040
5014
5020
5034
5031
5030
A2
A2

FIG. 114

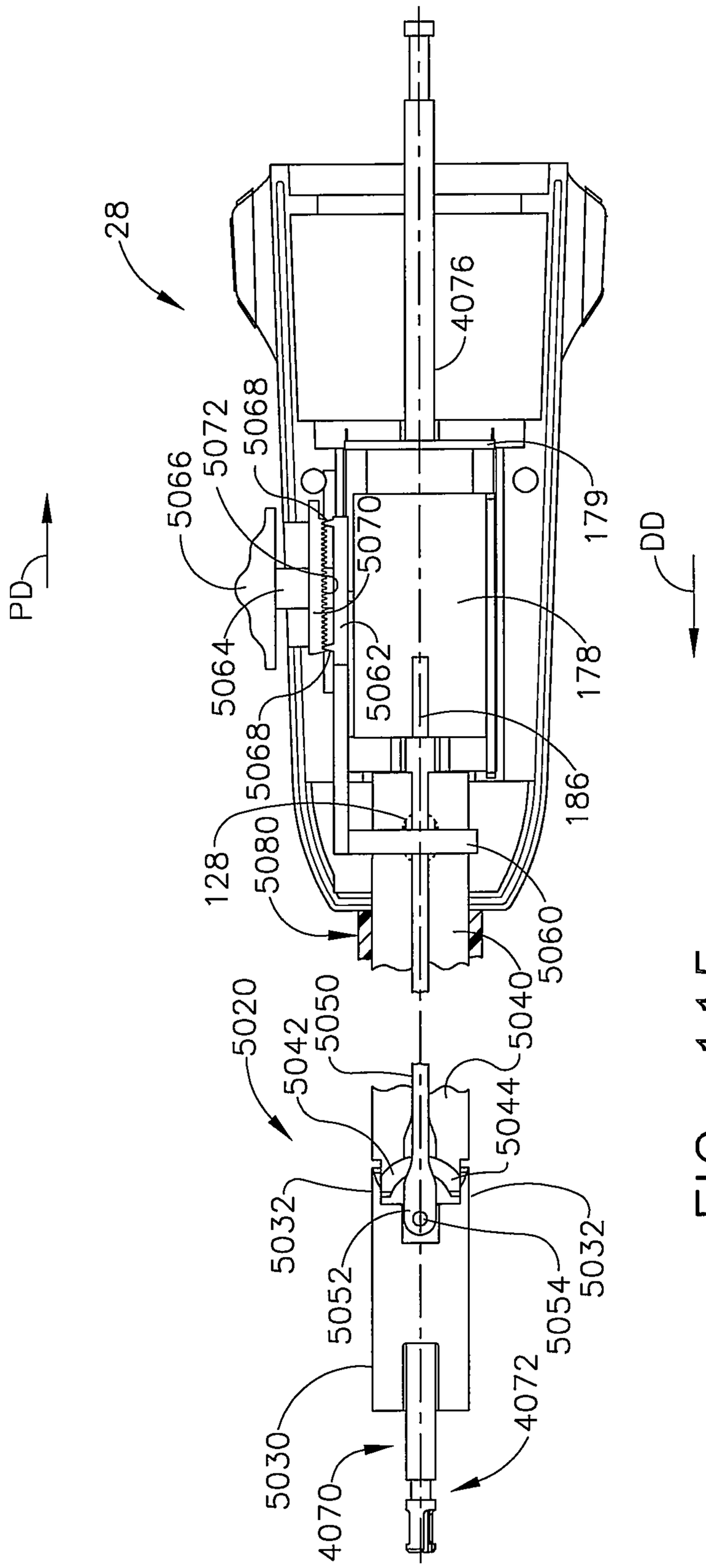
28
PD
DD
4076
5072
5068
5066
5070
5064
5062
5068
128
5080
179
178
186
5060
5040
5020
5042
5050
5044
5032
5052
5054
5032
5030
4070
4072

FIG. 115

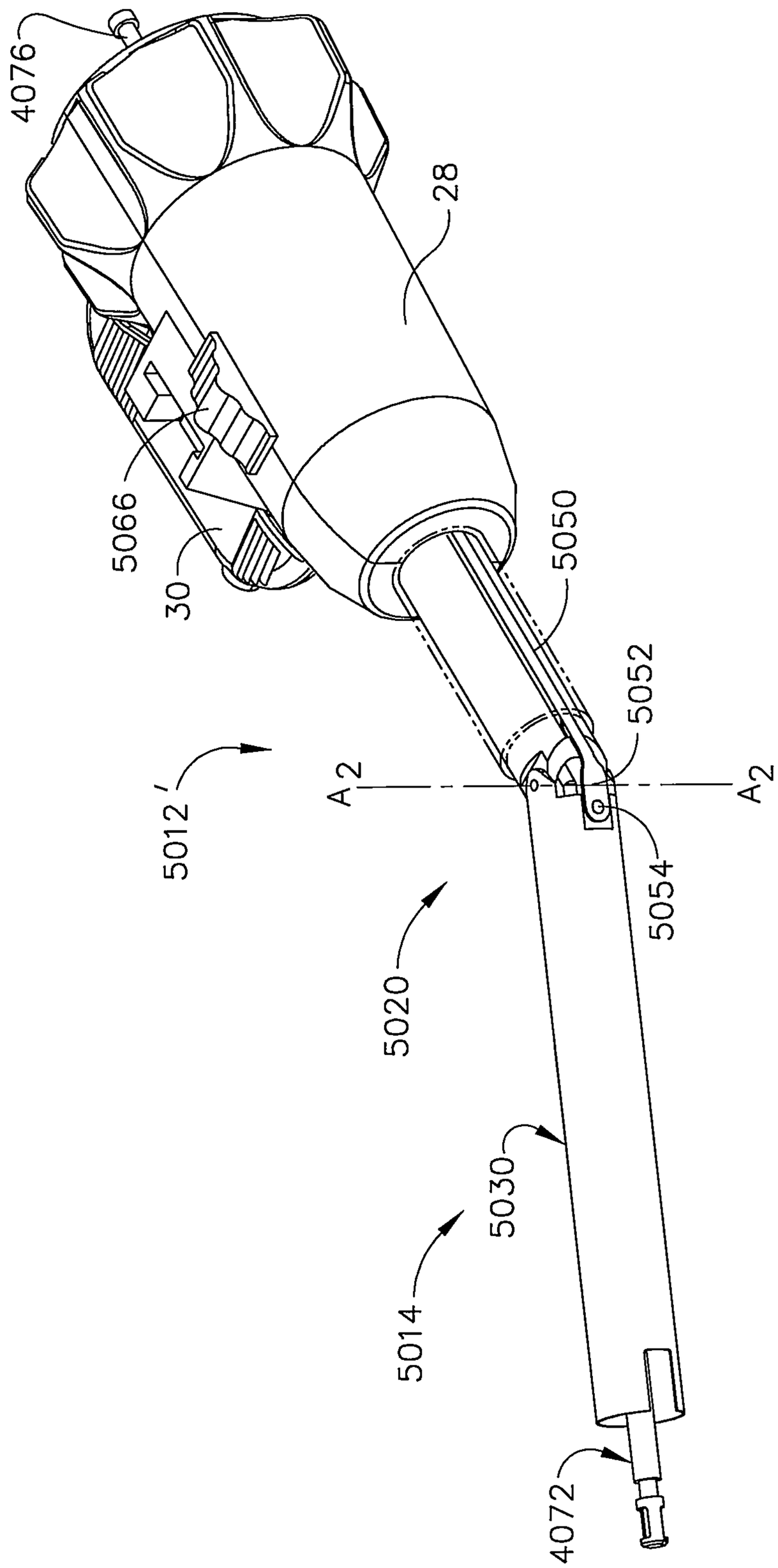

FIG. 116

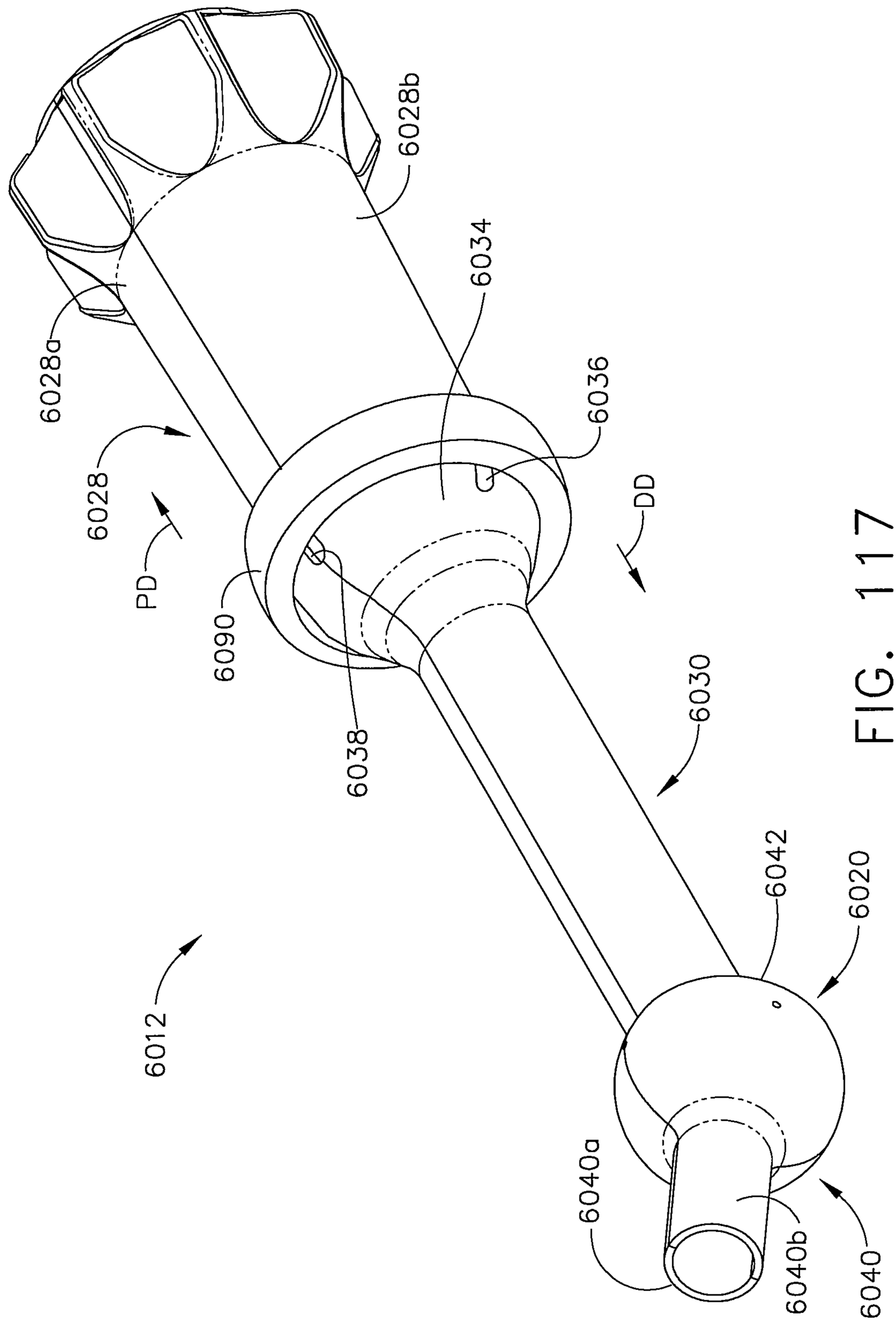
6012
6028
6028a
6028b
PD
6034
6036
DD
6090
6038
6030
6042
6020
6040a
6040b
6040

FIG. 117

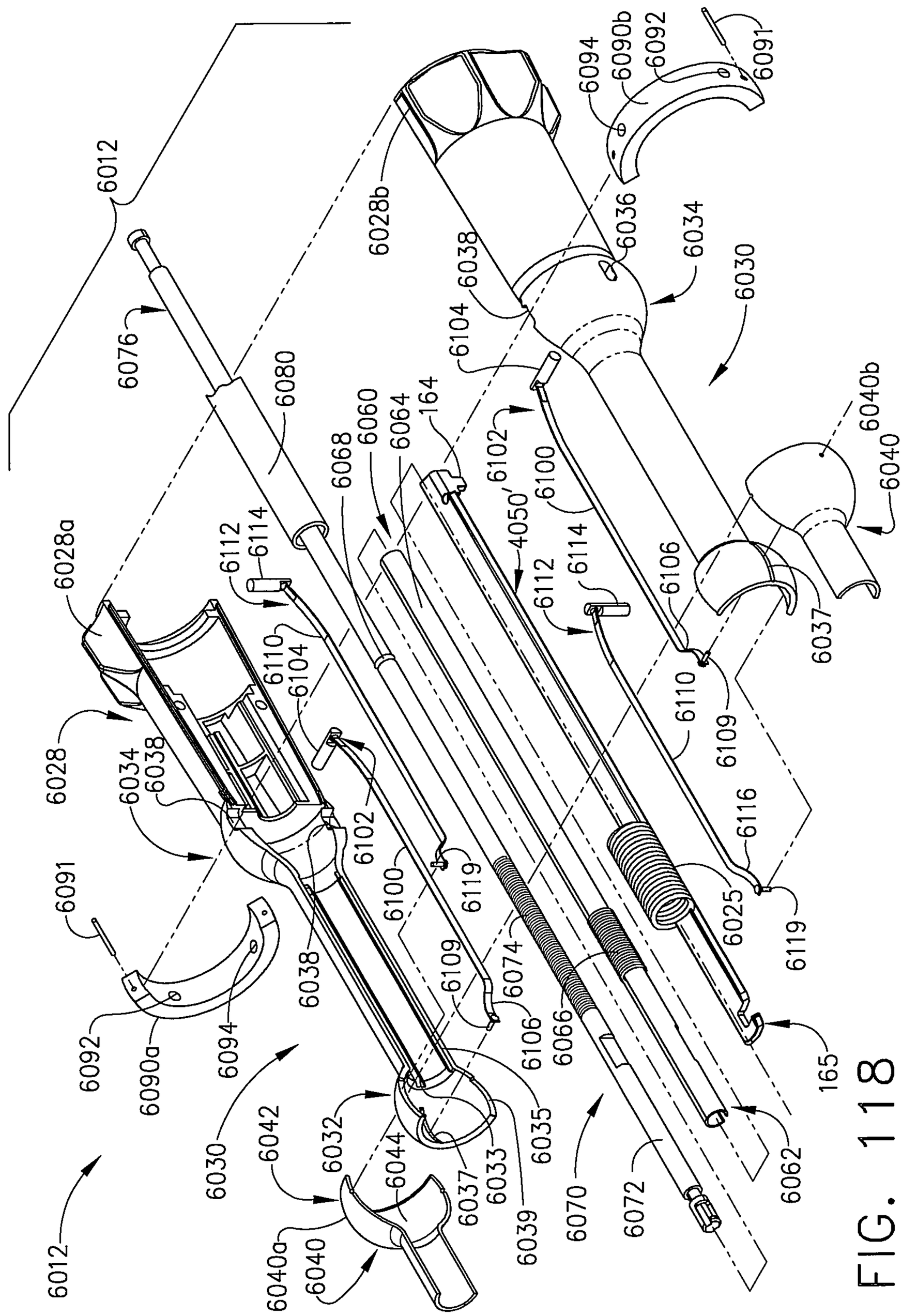
6012
6076
6080
6028b
6038
6036
6034
6030
6094
6090b
6092
6091
6104
6102
6100
4050
6114
6112
6106
6110
6109
6116
6119
6025
6037
6040b
6040
6060
6064
164
6068
6028a
6028
6034
6038
6104
6110
6112
6114
6102
6100
6109
6119
6074
6106
6066
6035
6039
6033
6037
6044
6032
6042
6030
6040a
6040
6012
6092
6090a
6094
6091
6038
6070
6072
6062
165

FIG. 118

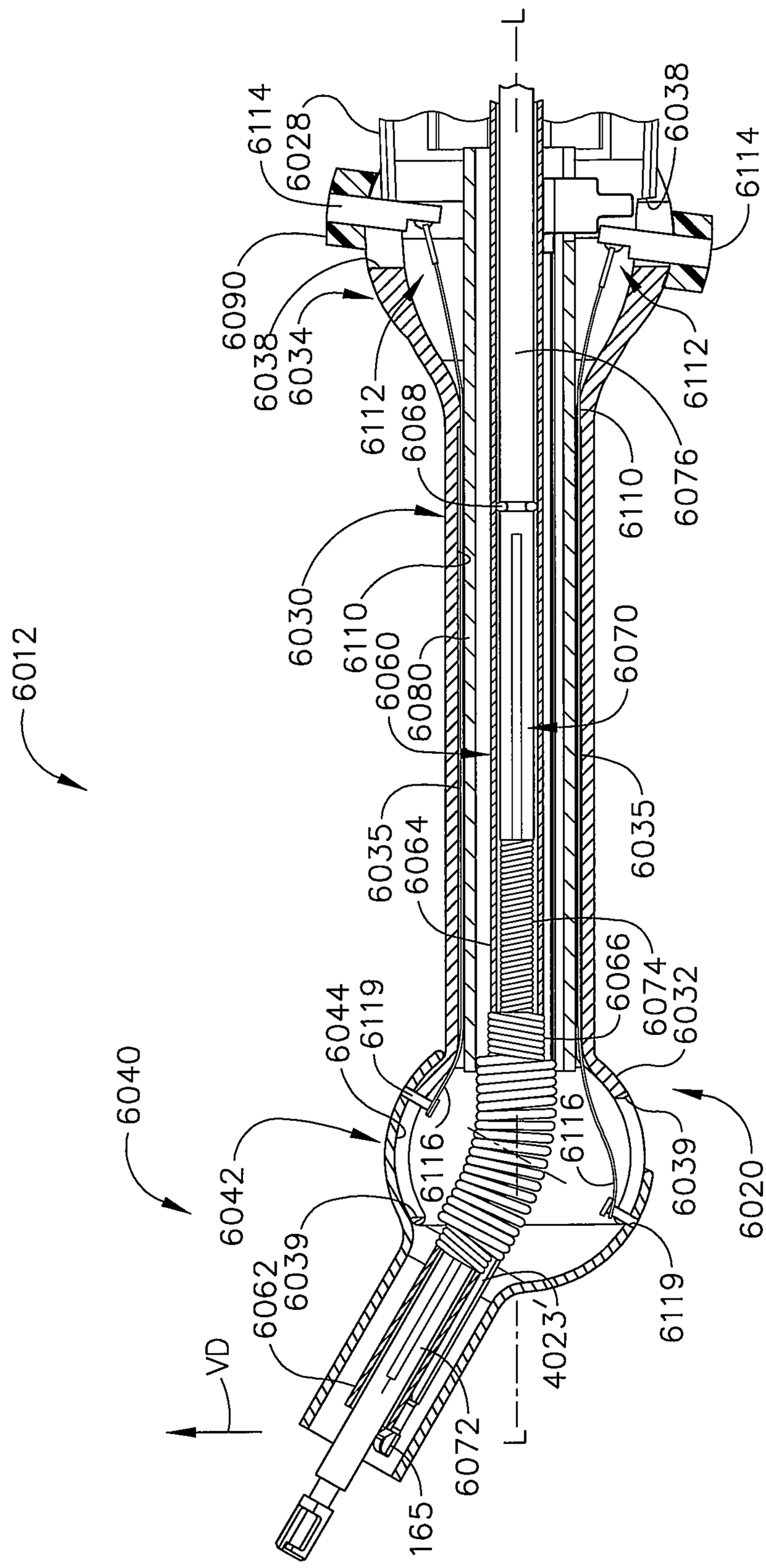
6012
6040
6114
6028
6090
6038
6034
6112
6068
6030
6110
6060
6080
6035
6064
6044
6119
6042
6062
6039
VD
165
6072
L
4023'
6116
6119
6039
6020
6032
6074
6066
6070
6035
6110
6076
6112
6114
6038
L

FIG. 119

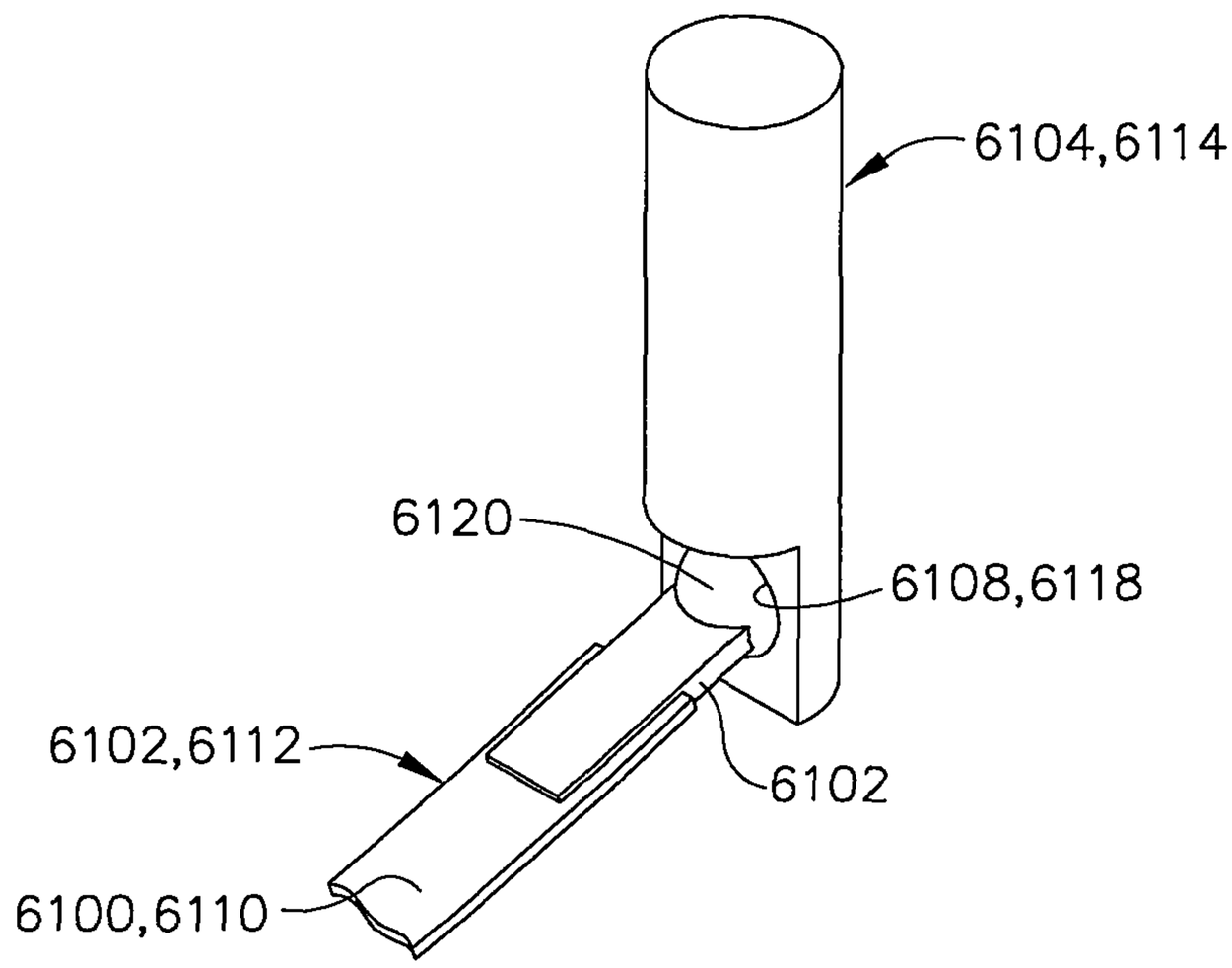

FIG. 120

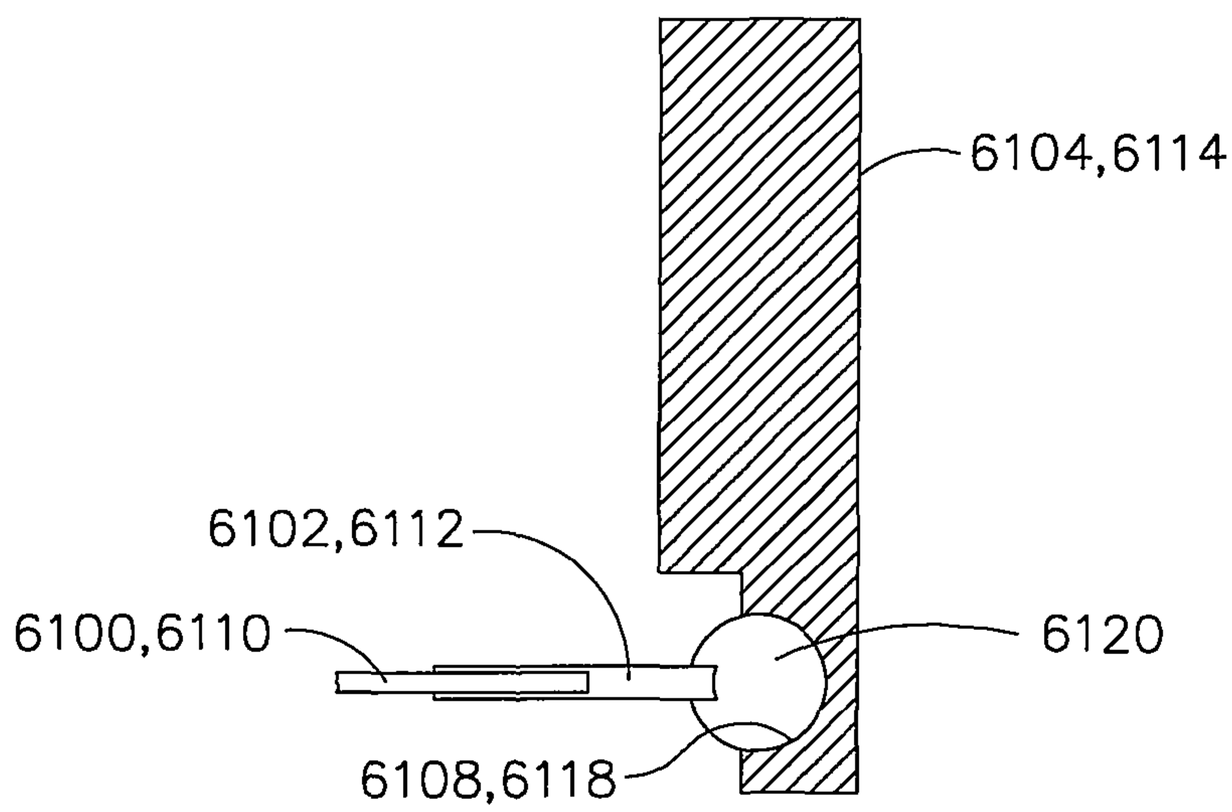

FIG. 121

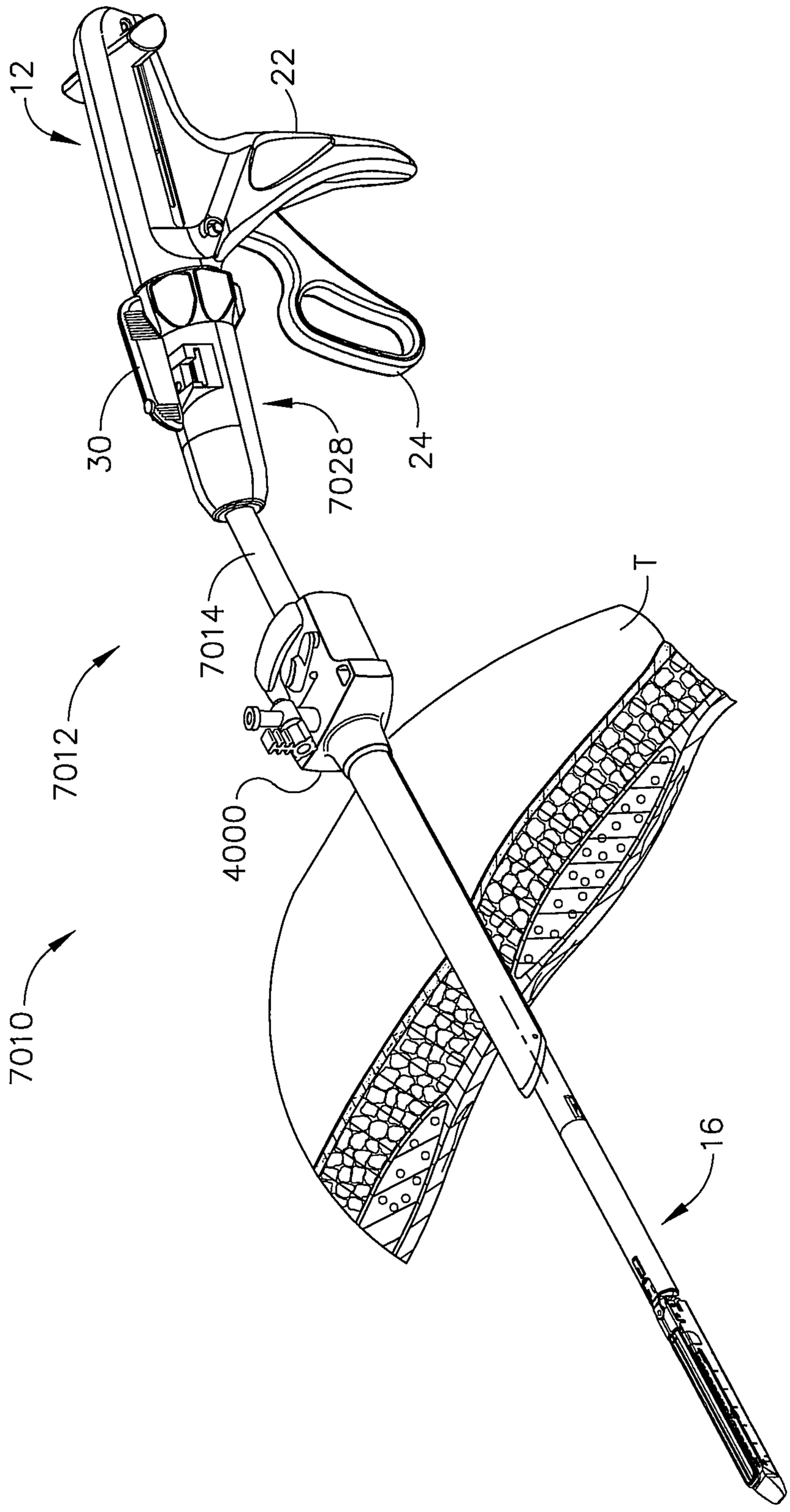

FIG. 122

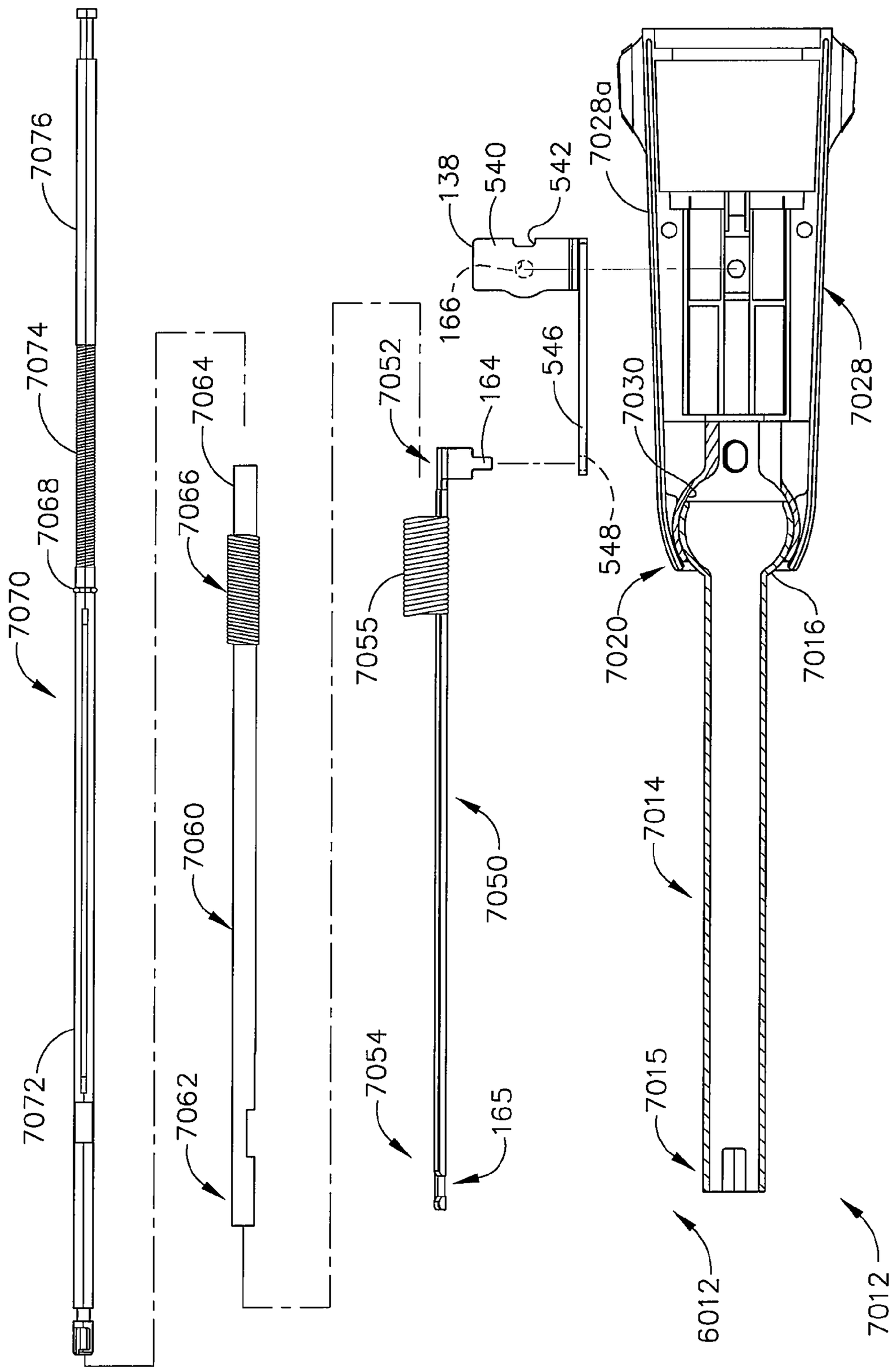
7076
7074
7068
7070
7072
7064
7066
7060
7062
7052
7055
7050
7054
165
164
166
138
540
542
546
548
7028a
7030
7028
7020
7016
7014
7015
6012
7012

FIG. 123

SURGICAL STAPLING APPARATUSES WITH LOCKABLE END EFFECTOR POSITIONING SYSTEMS

CROSS-REFERENCE TO RELATED APPLICATIONS

This application is a continuation application claiming priority under 35 U.S.C. § 120 to U.S. patent application Ser. No. 14/459,496, entitled SURGICAL STAPLING APPARATUS WITH INTERLOCKABLE FIRING SYSTEM, filed Aug. 14, 2014, which issued on Dec. 8, 2015 as U.S. Pat. No. 9,204,878, which is a continuation application claiming priority under 35 U.S.C. § 120 to U.S. patent application Ser. No. 12/957,685, entitled SURGICAL STAPLING APPARATUS WITH INTERLOCKABLE FIRING SYSTEM, filed Dec. 1, 2010, which issued on Nov. 4, 2014 as U.S. Pat. No. 8,875,971, which is a continuation application claiming priority under 35 U.S.C. § 120 to U.S. patent application Ser. No. 12/031,326, filed Feb. 14, 2008, entitled SURGICAL STAPLING APPARATUS WITH INTERLOCKABLE FIRING SYSTEM, which issued on Jan. 11, 2011 as U.S. Pat. No. 7,866,527, the entire disclosures of which are hereby incorporated by reference herein.

FIELD OF THE INVENTION

The present invention relates in general to endoscopic surgical instruments including, but not limited to, surgical stapler instruments configured for use with disposable loading units that are capable of applying lines of staples to tissue while cutting the tissue between those staple lines and, more particularly, to improvements relating to such instruments.

BACKGROUND

The following U.S. Patent applications which are herein incorporated by reference are commonly-owned by the Assignee of the present application:

(1) U.S. patent application Ser. No. 12/031,368, entitled SURGICAL STAPLING APPARATUS WITH LOAD-SENSITIVE FIRING MECHANISM, now U.S. Pat. No. 8,584,919;

(2) U.S. patent application Ser. No. 12/031,001, entitled ARTICULATABLE LOADING UNITS FOR SURGICAL STAPLING AND CUTTING INSTRUMENTS, now U.S. Patent Application Publication No. 2009/0206133;

(3) U.S. patent application Ser. No. 12/030,980, entitled SURGICAL STAPLING APPARATUS WITH REPROCESSIBLE HANDLE ASSEMBLY, now U.S. Pat. No. 7,819,297;

(4) U.S. patent application Ser. No. 12/031,066, entitled SURGICAL STAPLING APPARATUS WITH ARTICULATABLE COMPONENTS, now U.S. Pat. No. 7,861,906;

(5) U.S. patent application Ser. No. 12/031,030, entitled SURGICAL STAPLING APPARATUS WITH CONTROL FEATURES OPERABLE WITH ONE HAND, now U.S. Pat. No. 7,819,298; and

(6) U.S. patent application Ser. No. 12/030,974, entitled SURGICAL STAPLING APPARATUS WITH RETRACTABLE FIRING SYSTEMS, now U.S. Pat. No. 7,819,296.

Endoscopic surgical instruments are often preferred over traditional open surgical devices since a smaller incision tends to reduce the post-operative recovery time and complications. Consequently, significant development has gone into a range of endoscopic surgical instruments that are

suitable for precise placement of a distal end effector at a desired surgical site through a cannula of a trocar. These distal end effectors engage the tissue in a number of ways to achieve a diagnostic or therapeutic effect (e.g., endocutter, grasper, cutter, staplers, clip applier, access device, drug/gene therapy delivery device, and energy device using ultrasound, RF, laser, etc.).

Known surgical staplers include an end effector that simultaneously makes a longitudinal incision in tissue and applies lines of staples on opposing sides of the incision. The end effector includes a pair of cooperating jaw members that, if the instrument is intended for endoscopic or laparoscopic applications, are capable of passing through a cannula passageway. One of the jaw members receives a staple cartridge having at least two laterally spaced rows of staples. The other jaw member defines an anvil having staple-forming pockets aligned with the rows of staples in the cartridge. The instrument commonly includes a plurality of reciprocating wedges which, when driven distally, pass through openings in the staple cartridge and engage drivers supporting the staples to effect the firing of the staples toward the anvil.

Different types of surgical staplers suitable for endoscopic applications are known. For example, one type of surgical stapler employs a staple cartridge. The staple cartridge typically supports a plurality of staples oriented on both sides of a longitudinally extending slot in the cartridge body that is adapted to receive a cutting member that is driven longitudinally therethrough. As the cutting member is driven through the cartridge slot, the staples are driven upward into the anvil portion of the instrument. The cutting member may be supported on a driven member that comprises a portion of the instrument apart from the cartridge. Examples of those types of devices are described in U.S. Pat. No. 6,905,057, entitled SURGICAL STAPLING INSTRUMENT INCORPORATING A FIRING MECHANISM HAVING A LINKED RACK TRANSMISSION and U.S. Pat. No. 7,083,075, entitled MULTI-STROKE MECHANISM WITH AUTOMATIC END OF STROKE RETRACTIONS, the disclosures of which are herein incorporated by reference in their entireties.

Other types of surgical stapling instruments are configured to operate with disposable loading units (DLU's) that are constructed to support a cartridge and knife assembly therein. Such devices that are designed to accommodate DLU's purport to offer the advantage of a "fresh" knife blade for each firing of the instrument. An example of such surgical stapling instrument and DLU arrangement is disclosed in U.S. Pat. No. 5,865,361, the disclosure of which is herein incorporated by reference in its entirety.

Prior surgical stapling apparatuses, such as those disclosed in U.S. Pat. No. 5,865,361, employ firing lockout arrangements that can be difficult to use because the clinician must depress a plunger on one side of the handle to enable an actuation shaft to be actuated by cycling a movable handle. Such arrangement generally requires the clinician to use both hands (one to hold onto the handle assembly and actuate the movable handle and the other hand to depress the plunger). It would be more desirable to have a surgical stapling apparatus that has a more ergonomically efficient firing lockout trigger arrangement that does not require the clinician to use both hands to fire the instrument.

SUMMARY

A surgical instrument that comprises a housing, an elongate shaft configured for operable attachment to a surgical

end effector, and a selectively lockable rotation system is disclosed. The selectively lockable rotation system comprises a mounting member coupled to the elongate shaft and being rotatably supported on the housing for selective rotation relative to the housing about a longitudinal axis defined by the elongate shaft. The selectively lockable rotation system further comprises a switch member supported for selective longitudinal movement relative to the housing and the mounting member between an unlocked position wherein the mounting member is freely rotatable relative to the housing and a locked position wherein a locking formation on a distal end of the switch member is in retaining engagement with the mounting member to prevent the mounting member and the elongate shaft from rotating relative to the housing.

A surgical instrument that comprises a housing, an elongate shaft, and rotation means for coupling the elongate shaft to the housing and facilitating selective rotation of the elongate shaft relative to the housing about a longitudinal axis defined by the elongate shaft is disclosed. The surgical instrument further comprises a surgical end effector operably coupled to the elongate shaft by an articulation joint to facilitate selective articulation of the surgical end effector relative to the elongate shaft in directions transverse to the longitudinal axis. The surgical instrument further comprises articulation means for selectively applying articulation motions to the surgical end effector and locking means interfacing with the rotation means and the articulation means such that when the rotation means is actuated, the locking means prevents the articulation means from applying the articulation motions to the surgical end effector and when the articulation means is actuated, the locking means prevents the rotation means from rotating the elongate shaft.

A surgical instrument that comprises a handle, an elongate shaft comprising an articulation joint, a surgical end effector operably coupled to said articulation joint, and an articulation system is disclosed. The articulation system comprises an articulation link configured to operably interface with the surgical end effector to apply articulation motions thereto and an articulation actuator supported for movable travel on said handle and interfacing with said articulation link to selectively apply actuation motions to said articulation link. The surgical instrument further comprises a selectively lockable rotation system that comprises a mounting member coupled to said elongate shaft and being rotatably supported on said handle for selective rotation relative to said handle about a longitudinal axis defined by said elongate shaft. The selectively lockable rotation system further comprises a switch member supported for selective longitudinal movement relative to said handle and said mounting member between an unlocked position wherein said mounting member is freely rotatable relative to said handle and a locked position wherein a locking formation on a distal end of said switch member is in retaining engagement with said mounting member to prevent said mounting member from rotating relative to said handle.

BRIEF DESCRIPTION OF THE FIGURES

The accompanying drawings, which are incorporated in and constitute a part of this specification, illustrate embodiments of the invention, and, together with the general description of various embodiments of the invention given above, and the detailed description of the embodiments given below, serve to explain various principles of the present invention.

FIG. **1** is a perspective view of a reusable surgical stapling apparatus of various embodiments of the present invention with an articulatable disposable loading unit coupled thereto.

FIG. **2** is a perspective view of a reusable surgical stapling apparatus of various embodiments of the present invention with a non-articulatable disposable loading unit coupled thereto.

FIG. **3** is a partial exploded perspective view of a quick disconnect fastener embodiment of the present invention.

FIG. **4** is an exploded assembly view of a reusable surgical stapling apparatus of various embodiments of the present invention.

FIG. **5** is another exploded assembly view of the reusable surgical stapling apparatus of FIG. **4**.

FIG. **6** is an exploded assembly view of a portion of a handle assembly of the reusable surgical stapling apparatus embodiment of FIGS. **4** and **5**.

FIG. **7** is a partial right side perspective view of a firing assembly embodiment of the present invention.

FIG. **8** is a partial left side perspective view of the firing assembly embodiment of FIG. **7**.

FIG. **9** is a left side view of the firing assembly embodiment of FIGS. **7** and **8**.

FIG. **10** is an exploded assembly view of a control rod assembly embodiment of various embodiments of the present invention.

FIG. **11** is an exploded assembly view of a rotation knob assembly and articulation mechanism embodiment of the present invention.

FIG. **12** is a perspective view of a contaminated reusable surgical stapling apparatus of FIGS. **1** and **2** with the disposable loading unit detached therefrom.

FIG. **13** is a perspective view of the contaminated reusable surgical stapling apparatus of FIG. **12** with the control rod extended out of the distal end of the elongated body.

FIG. **14** is a diagrammatic representation of a collection of actions of a cleaning method embodiment of the present invention.

FIG. **15** is a perspective view depicting the submersion of the extended control rod into a cleaning solution.

FIG. **16** is another diagrammatic representation of a collection of other actions of a cleaning method embodiment of the present invention.

FIG. **17** is a perspective view depicting the submersion of various components of an embodiment of the present invention in a cleaning solution.

FIG. **18** is a side view of a firing assembly embodiment of various embodiments of the present invention.

FIG. **19** is a diagrammatic representation of a collection of actions of a reassembly method embodiment of the present invention.

FIG. **20** is an exploded view depicting use of an assembly tray of an embodiment of the present invention.

FIG. **21** is a perspective view of another surgical stapling apparatus of an embodiment of the present invention attached to a non-articulatable disposable loading unit.

FIG. **22** is an exploded assembly view of a handle assembly of the surgical stapling apparatus depicted in FIG. **21**.

FIG. **23** is an exploded assembly view of another disposable loading unit sensing mechanism embodiment of various embodiments of the present invention.

FIG. **24** is an exploded assembly view of another rotation knob assembly and articulation mechanism embodiment of the present invention.

FIG. **25** is an exploded assembly view of a firing release trigger assembly of an embodiment of the present invention.

FIG. **26** is a partial assembly view of the firing release trigger assembly depicted in FIG. **25**.

FIG. **27** is an assembly view of a handle assembly embodiment of the present invention.

FIG. **28** is another assembly view of a handle assembly embodiment of the present invention with the movable handle thereof pulled against the stationary handle portion to close the anvil on the disposable loading unit.

FIG. **29** is another assembly view of a handle assembly embodiment of the present invention with the movable handle returned to a starting position after the anvil has been closed.

FIG. **30** is another assembly view of a handle assembly embodiment of the present invention prior to activating the firing release trigger.

FIG. **31** is another assembly view of a handle assembly embodiment of the present invention with the firing release trigger activated.

FIG. **32** is another assembly view of a handle assembly embodiment of the present invention with the firing release trigger activated and the movable handle starting to be actuated.

FIG. **33** another assembly view of a handle assembly embodiment of the present invention with the firing release trigger activated with the movable handle thereof pulled against the stationary handle portion.

FIG. **34** is a partial assembly view of another firing release trigger embodiment of the present invention.

FIG. **35** is a perspective view of another surgical stapling apparatus embodiment of the present invention.

FIG. **36** is a partial exploded assembly view of a portion of the handle assembly and rotatable shroud of the surgical stapling apparatus of FIG. **35**.

FIG. **37** is a perspective view of a portion of the surgical stapling apparatus embodiment of FIGS. **35** and **36** with a portion of the handle housing removed to show the various components therein in the rotation mode.

FIG. **38** is a side view of the portion of the surgical stapling apparatus embodiment depicted in FIG. **36** with the selector switch thereof in a distal unlocked position.

FIG. **39** is an enlarged view of the bolt disengaged from the rotation lock ring when the apparatus is in the rotation mode.

FIG. **40** is a cross-sectional view of the surgical stapling apparatus taken along line **40-40** in FIG. **38**.

FIG. **41** is a partial top view of the surgical stapling apparatus of FIGS. **35-40** with the grip portion shown in cross-section.

FIG. **42** is a perspective view of a portion of the surgical stapling apparatus embodiment of FIGS. **35-41** with a portion of the handle housing removed to show the various components therein in the articulation mode.

FIG. **43** is a side view of the portion of the surgical stapling apparatus embodiment depicted in FIG. **36** with the selector switch thereof in a proximal locked position.

FIG. **44** is an enlarged view of the bolt engaging the rotation lock ring to lock the apparatus in the articulation mode.

FIG. **45** is a partial cross-sectional view of the surgical stapling apparatus of FIG. **43** taken along line **45-45** in FIG. **43**.

FIG. **46** is a partial cross-sectional view of a handle assembly of a surgical stapling apparatus of the present invention employing an alternate translation member.

FIG. **47** is a perspective view of another surgical stapling apparatus embodiment of the present invention.

FIG. **48** is an enlarged perspective view of the handle assembly portion of the surgical stapling instrument of FIG. **47** with a portion of the handle housing removed for clarity.

FIG. **49** is partial side view of the handle assembly depicted in FIG. **49** with a portion of the handle housing removed for clarity.

FIG. **50** is a partial top view of the handle assembly depicted in FIG. **49** with some components shown in cross-section and with the articulation system thereof in a locked position.

FIG. **51** is a partial top view of the handle assembly depicted in FIGS. **49** and **50** with some components shown in cross-section and with the articulation system thereof in an unlocked position.

FIG. **52** is a perspective view of another surgical stapling apparatus embodiment of the present invention.

FIG. **53** is a perspective assembly view of the handle assembly portion of the surgical stapling apparatus of FIG. **52** with a portion of the handle housing removed and the sensor cylinder omitted for clarity.

FIG. **54** is a left-side perspective assembly view of a portion of the handle assembly of the surgical stapling apparatus of FIGS. **52** and **53** with the housing removed for clarity.

FIG. **55** is a right-side perspective assembly view of a portion of the handle assembly of the surgical stapling apparatus of FIGS. **52-54** with the housing removed for clarity.

FIG. **56** is a side view of a portion of the articulation system, gear and articulation selector switch embodiments with the articulation switch in a neutral position.

FIG. **57** is another side view of the articulation system, gear and articulation selector switch embodiments with the articulation switch in the left articulation position.

FIG. **58** is another side view of the articulation system and gear and articulation selector switch embodiments with the articulation switch in the right articulation position.

FIG. **59** is a bottom view of the gear selector switch, drive gear assembly, articulation transfer gear train and actuation bar of an embodiment of the present invention with the selector gear selector switch in the articulation position.

FIG. **60** is a bottom view of the gear selector switch, drive gear assembly, articulation transfer gear train and actuation bar of an embodiment of the present invention with the selector gear selector switch in the firing position.

FIG. **61** is an enlarged view of the gear selector switch embodiment in the articulation position.

FIG. **62** is a cross-sectional view of the gear selector switch embodiment in the firing position.

FIG. **63** is an end view of a various components of the surgical stapling apparatus in an articulation mode.

FIG. **64** is another end view of the components depicted in FIG. **63** in a firing mode.

FIG. **65** is a partial cross-sectional perspective view of an alternative articulation mechanism embodiment of the present invention.

FIG. **66** is a partial top cross-sectional view of the articulation mechanism of FIG. **65**.

FIG. **67** illustrates a position of the cam disc and articulation pin of the articulation mechanism embodiment of FIGS. **65** and **66** in a left articulated position.

FIG. **68** illustrates a position of the cam disc and articulation pin of the articulation mechanism embodiment of FIGS. **65** and **66** in a straight (non-articulated) position.

FIG. **69** illustrates a position of the cam disc and articulation pin of the articulation mechanism embodiment of FIGS. **65** and **66** in a right articulated position.

FIG. **70** is a cross-sectional plan view of a portion of another articulation mechanism embodiment of the present invention.

FIG. **71** is a partial cross-sectional view of a portion of the articulation mechanism embodiment of FIG. **70**.

FIG. **72** is a side view of another articulation mechanism embodiment of the present invention with some of the components thereof shown in cross-section.

FIG. **73** is a cross-sectional view of the articulation mechanism embodiment of FIG. **72** taken along line **73-73** in FIG. **72**.

FIG. **74** is a side view of another articulation mechanism embodiment of the present invention with some of the components thereof shown in cross-section.

FIG. **75** is a perspective view of an outer articulation ring embodiment of the articulation mechanism of FIG. **74**.

FIG. **76** is a left side perspective view of another surgical stapling apparatus embodiment of the present invention.

FIG. **77** is a right side perspective view of the surgical stapling apparatus embodiment depicted in FIG. **76**.

FIG. **78** is an exploded assembly view of the right housing segment of the handle assembly with the removable cover detached from the housing segment.

FIG. **79** is another view of the right housing segment of the handle assembly with the removable cover detached from the housing segment.

FIG. **80** is a right side view of the handle assembly of the surgical stapling apparatus depicted in FIGS. **76-78**.

FIG. **81** is a cross-sectional view of the housing assembly taken along line **81-81** in FIG. **80**.

FIG. **82** is a cross-sectional view of the housing assembly taken along line **82-82** in FIG. **80**.

FIG. **83** is a cross-sectional view of a portion of the housing assembly and cocking knob taken along line **83-83** in FIG. **80**.

FIG. **84** is a right side view of the handle assembly of the surgical stapling apparatus depicted in FIGS. **76-83** with the removable cover removed to show the retract knob and the cocking knob in the "pre-fired" position.

FIG. **85** is another right side view of the handle assembly of FIG. **84** with the cocking knob in a cocked position.

FIG. **86** is another right side view of the handle assembly of FIGS. **84** and **85** showing the position of the retract knob and the cocking knob prior to reaching the fully fired position.

FIG. **87** is a partial cross-sectional view of the handle assembly and cocking knob with the cocking knob biased in a clockwise direction to release the lock member.

FIG. **88** is another partial cross-sectional view of the handle assembly, cocking knob and retract knob wherein the retract knob has released the lock member to permit the actuation shaft to be automatically retracted.

FIG. **89** is a partial perspective view of a portion of a disposable loading unit of various embodiments of the present invention.

FIG. **90** is a perspective view of a pawl embodiment of various embodiments of the present invention.

FIG. **91** is a perspective view of another pawl embodiment of various embodiments of the present invention.

FIG. **92** is a bottom perspective view of an actuation shaft embodiment of various embodiments of the present invention.

FIG. **93** is a bottom perspective view of another actuation shaft embodiment of various embodiments of the present invention.

FIG. **93**A is a side view of a portion of a firing system embodiment of the present invention used in connection with a surgical stapling instrument of the type disclosed in U.S. patent application Ser. No. 11/821,277, now U.S. Pat. No. 7,753,245, with the tooth in driving engagement with the firing member.

FIG. **93**B is another side view of the firing system embodiment of FIG. **93**A with the tooth in the disengaged position.

FIG. **94** is a perspective view of a surgical stapling apparatus and a disposable loading unit embodiment of the present invention.

FIG. **95** is a perspective view of the disposable loading unit embodiment depicted in FIG. **94**.

FIG. **96** is an exploded assembly view of the disposable loading unit embodiment of FIG. **95**.

FIG. **97** is a perspective view of the disposable loading unit of FIGS. **95** and **96** being articulated with a pair of surgical graspers.

FIG. **98** is a perspective view of another disposable loading unit embodiment of the present invention.

FIG. **99** is an exploded assembly view of the disposable loading unit embodiment of FIG. **98**.

FIG. **100** is a perspective view of the disposable loading unit of FIGS. **98** and **99** being articulated with a pair of surgical graspers.

FIG. **101** is a perspective view of the disposable loading unit of FIGS. **98-100** illustrating passive articulation travel and active articulation travel thereof.

FIG. **102** is a perspective view of another disposable loading unit embodiment of the present invention.

FIG. **103** is an exploded assembly view of the disposable loading unit embodiment of FIG. **102**.

FIG. **104** is an exploded assembly view of another disposable loading unit sensing mechanism and control rod assembly embodiment of various embodiments of the present invention.

FIG. **105** is a perspective view of another disposable loading unit embodiment of the present invention illustrating passive articulation travel and active articulation travel thereof.

FIG. **106** is an exploded assembly view of the disposable loading unit of FIG. **105**.

FIG. **107** is a proximal end view of the disposable loading unit of FIGS. **105** and **106** taken in the direction represented by arrows **107-107** in FIG. **105**.

FIG. **108** is a perspective view of another surgical stapling apparatus embodiment of the present invention.

FIG. **109** is an exploded assembly view of an articulation system embodiment of the present invention employed in the surgical stapling apparatus of FIG. **108**.

FIG. **110** is an exploded assembly view of portions of the intermediate articulation joint of the articulation system of FIG. **109**.

FIG. **111** is a perspective of the surgical stapling apparatus of FIG. **108** employed in an open surgical application.

FIG. **112** is a perspective view of another surgical stapling apparatus embodiment of the present invention employed in connection with a conventional trocar to perform an endoscopic surgical procedure.

FIG. **113** is a perspective view of another articulation system embodiment of the present invention.

FIG. **114** is a partial exploded assembly view of the articulation system of FIG. **113**.

FIG. **115** is a side assembly view of the articulation system of FIGS. **113** and **114**.

FIG. **116** is a perspective view of another articulation system embodiment of the present invention.

FIG. **117** is a perspective view of another articulation system embodiment of the present invention.

FIG. **118** is an exploded assembly view of the articulation system of FIG. **117**.

FIG. **119** is a side assembly view of a portion of the articulation system of FIGS. **117** and **118** with some components thereof shown in cross-section for clarity.

FIG. **120** is a partial perspective assembly view of various articulation bar and pin embodiments of the present invention.

FIG. **121** is a cross-sectional view of the articulation bar and pin embodiments depicted in FIG. **120**.

FIG. **122** is a perspective view of another surgical stapling apparatus embodiment of the present invention employed in connection with a conventional trocar to perform an endoscopic surgical procedure.

FIG. **123** is an exploded partial assembly view of an articulation system embodiment of the surgical stapling apparatus of FIG. **122**.

DETAILED DESCRIPTION

Turning to the Drawings, wherein like numerals denote like components throughout the several views, FIG. **1** depicts a reusable surgical instrument, which in the illustrative versions is more particularly a surgical stapling apparatus **10**, capable of practicing the unique benefits of various embodiments of the present invention. The surgical stapling apparatus **10** may include a handle assembly **12** and an elongated body **14**. FIG. **1** illustrates surgical stapling apparatus **10** with an articulatable disposable loading unit **16** coupled thereto. FIG. **2** illustrates surgical stapling apparatus **10** with a non-articulating disposable loading unit **16'** coupled thereto. The disposable loading units **16**, **16'** may include a tool assembly **17** that includes a cartridge assembly **18** that houses a plurality of surgical staples therein. The tool assembly **17** may further include a staple-forming anvil **20**. Such disposable loading units **16**, **16'** may perform surgical procedures such as cutting tissue and applying staples on each side of the cut. Various embodiments of the present invention may be used in connection with the disposable loading units disclosed in U.S. Pat. No. 5,865,361, the disclosure of which is herein incorporated by reference.

It will be appreciated that the terms "proximal" and "distal" are used herein with reference to a clinician gripping the handle assembly of an instrument. Thus, the tool assembly **17** is distal with respect to the more proximal handle assembly **12**. It will be further appreciated that, for convenience and clarity, spatial terms such as "vertical", "horizontal", "up", "down", "right", and "left" are used herein with respect to the drawings. However, surgical instruments are used in many orientations and positions, and these terms are not intended to be limiting and absolute.

As was discussed above, prior surgical stapling apparatuses such as those disclosed in U.S. Pat. No. 5,865,361 are ill-suited for reprocessing (i.e., re-sterilization) to enable the instruments to be reused because they are not easily disassembled. The surgical stapling apparatus **10** depicted in FIGS. **1-20** is adapted to be conveniently reprocessed and can be used in connection with articulatable disposable loading units **16** (FIG. **1**) and non-articulating disposable loading units **16'** (FIG. **2**) as will be discussed in further detail below. The various embodiments of the surgical stapling apparatus **10** may employ a handle assembly **12** that is constructed to facilitate cleaning and sterilization of the various components housed therein. For example, handle assembly **12** may include a stationary handle portion **22**, a movable handle **24**, and a barrel portion **26**. A rotatable knob **28** may be mounted on the forward end of barrel portion **26** to facilitate rotation of elongated body **14** with respect to handle assembly **12** about longitudinal axis "L-L" of the stapling apparatus **10**. As will be discussed in further detail below, some handle assembly embodiments may also include an articulation lever **30** that is mounted on the forward end of barrel portion **26** adjacent rotatable knob **28**. Other embodiments may be designed to be used in connection with non-articulatable disposable loading units and thus the handle assembly **12** may not include such articulation components. Handle assembly **12** may further include handle housing **36**, which may be formed from a first housing segment **36*a*** and a second housing segment **36*b***, which, when coupled together, form handle housing **36**. To facilitate easy disassembly of handle assembly **12**, the housing segments **36*a***, **36*b*** may be coupled together with, at east one and, preferably three quick release fasteners **400**.

As shown in FIG. **3**, a quick release fastener **400** may comprise a bayonet-type fastener that includes a screw head portion **402** that has a barrel or body portion **404** protruding therefrom that is sized to be received in a hole **412** in a corresponding stand off member **410** formed in the housing segment **36*a***. A rod or cross member **406** is mounted in the body portion **404** to form a substantially T-shaped connector portion **408** sized to be received in slot segments **414** on each side of the hole **412**. The slot segments **414** are configured such that when the T-shaped connector portion **408** is inserted into the hole **412** and slot segments **414** and turned as illustrated by the arrow "T" in FIG. **3**, the rod **406** releasably retains the connector portion **408** in position. In various embodiments, the body portion **404** of the quick release fastener **400** may extend through a corresponding hole in the housing segment **36*b*** and then have the rod or cross member **406** attached thereto such that the quick release fastener **400** is non-removably coupled to the second housing segment **36*b*** so that when the housing segment **36*b*** is detached from the first housing segment **36*a***, the quick release fasteners **400** do not become lost and remain with the second housing segment **36*b*** for cleaning/sterilization purposes.

Referring to FIGS. **4-8**, a movable handle **24** may be pivotably coupled to a firing assembly **500** that may be removed from the handle housing **36** for cleaning/sterilization purposes. In various embodiments, the firing assembly **500** may comprise an internal frame assembly **510** that operably supports the movable handle **24**. As can be seen in those Figures, the movable handle **24** may be pivotally attached to the internal frame assembly **510** by pivot pin **38**. A biasing member **40**, which may comprise a torsion spring, biases movable handle **24** away from stationary handle portion **22**. See FIGS. **6-8**. An actuation shaft **46** may be supported within the internal frame assembly **510** and may include a toothed rack **48**. A driving pawl **42** having a rack engagement tooth **43** thereon is pivotably mounted to one end of movable handle **24** about a pivot pin **44**. See FIG. **8**. A biasing member **50**, which may comprise a torsion spring, is positioned to urge driving pawl **42** towards toothed rack **48** of actuation shaft **46**. See FIG. **7**. Movable handle **24** is pivotable to move rack engagement tooth **43** of driving pawl **42** into contact with toothed rack **48** of actuation shaft **46** to advance the actuation shaft **46** linearly in the distal direction

"DD". The distal end of actuation shaft **46** may have a cavity **47** formed therein to receive the proximal end **49** of a control rod **52** (FIG. **4**) such that linear advancement of actuation shaft **46** causes corresponding linear advancement of control rod **52**.

The internal frame assembly **510** may further include a locking pawl **54** that has a locking protrusion **55** thereon and is pivotably coupled to the frame assembly **510** about pivot pin **57** and is biased into a cavity **512** in the actuation shaft **46** by a biasing member **56**, which may comprise a torsion spring. Locking protrusion **55** of locking pawl **54** is movable into engagement with the cavity **512** to retain actuation shaft **46** in a longitudinally fixed position when no disposable loading unit has been coupled to the elongated body **14** as will be discussed in further detail below.

The internal frame assembly **510** may also operably house a retraction mechanism **58** that may comprise a right hand retractor knob **32***a* and a left hand retractor knob **32***b* that are connected to the proximal end of actuation shaft **46** by a coupling rod **60**. See FIG. **6**. Coupling rod **60** may include right and left engagement portions **62***a* and **62***b* for receiving retractor knobs **32***a* and **32***b*, respectively and a central portion **62**C which is dimensioned and configured to translate within a pair of longitudinal slots **514** in the internal frame assembly **510** and slots **34***a* formed in actuation shaft **46** adjacent the proximal end thereof. The retractor knobs **32***a*, **32***b*, may each have a cavity therein to enable them to be pressed onto the corresponding engagement portions **62***a*, **62***b*, respectively. In various embodiments of the present invention, the coupling rod **60** may be configured so that when the retractor knobs **32***a*, **32***b* are removed therefrom for disassembly purposes, the coupling rod **60** remains mounted in position with the internal frame assembly **510**. See FIGS. **7**, **8** and **17**. As shown in FIG. **6**, the central portion **62**C may be provided with a notch **63** that is adapted to be retainingly engaged by a retaining tab (not shown) formed on a proximal end of a retainer **520** that is slidably received in a cavity **522** in the actuation shaft **46**. A retract spring **524** is attached between a cross post **526** in the actuation shaft **46** and the retainer **520** to pull the retainer **520** distally such that the retaining tab formed on the proximal end thereof retainingly engages the notch **63** in the coupling rod **60**. Those of ordinary skill in the art will understand that when the retractor knobs **32***a*, **32***b* are detached from the coupling rod **60**, the coupling rod **60** remains coupled to the internal frame assembly **510** by the tab on the retainer **520**.

A release plate **64** may be operatively associated with actuation shaft **46** and is mounted for movement with respect thereto in response to manipulation of retractor knobs **32***a*, **32***b*. A pair of spaced apart pins **66** may extend outwardly from a lateral face of actuation shaft **46** to engage a pair of corresponding angled cam slots **68** formed in release plate **64**. Upon movement of retractor knobs **32***a*, **32***b* in the proximal direction "PD", pins **66** can release the release plate **64** downwardly with respect to actuation shaft **46** and with respect to toothed rack **48** such that the bottom portion of release plate **64** extends below toothed rack **48** to disengage rack engagement tooth **43** of driving pawl **42** from toothed rack **48**. A transverse slot **70** is formed at the proximal end of release plate **64** to accommodate the central portion **62***c* of coupling rod **60**, and elongated slots **34** (FIG. **1**) are defined in the barrel section **26** of handle assembly **12** to accommodate the longitudinal translation of coupling rod **60** as retraction knobs **32***a*, **32***b* are pulled in the proximal direction "PD" to retract actuation shaft **46** and thus retract control rod **52** in the proximal direction "PD".

In various embodiments, the internal frame assembly **510** may also operably support a firing lockout assembly **80** which may include a plunger **82** and a pivotable locking member **83**. See FIGS. **7** and **8**. Plunger **82** is biased to a central position by biasing springs **84** and includes annular tapered camming surfaces **85**. Each end of plunger **82** extends through handle housing **36** adjacent an upper end of stationary handle portion **22**. Pivotable locking member **83** may be pivotably attached at its distal end about pivot pin **86** and may include a locking gate **88** and proximal extension **90** having a slot **89** formed therein. See FIGS. **7** and **8**. Pivotable locking member **83** may be biased by a spring **93** (FIG. **9**) to cause the locking gate **88** attached thereto to enter into a locking detent **53** in the bottom of the actuation shaft **46** to prevent advancement of actuation shaft **46** and subsequent firing of stapling apparatus **10**. Annular tapered camming surface **85** on plunger **82** is positioned to extend into tapered slot **89** in proximal extension **90**. Lateral movement of plunger **82** in either direction against the bias of either spring **84** moves tapered camming surface **85** into engagement with the sidewalls of the tapered slot **89** in the proximal extension **90** to pivot pivotable locking member **83** about pivot pin **86** to move locking gate **88** out of the locking detent **53** to permit advancement of actuation shaft **46**.

As can be further seen in FIGS. **6-9**, a sensor link **182** may also be operably supported by the internal frame assembly **510**. As can be seen in those Figures, the sensor link **182** may be slidably attached to the internal frame assembly **510** by a pin or screw **530** that extends through a slot **532** in the sensor link **182** such that the sensor link **182** may slide longitudinally relative to the internal frame assembly **510**. A distal end of a spring **531** may be attached to the screw **530** and the proximal end of the spring **531** may be hooked over a hook **533** on the sensor link **182**. See FIG. **6**. Spring **531** serves to bias the sensor link **182** in the distal direction "DD". The sensor link **182** may further include a proximal locking arm **535** that has an inwardly protruding proximal end **537** configured to interact with the locking pawl **54**. In particular, when no disposable loading unit **16**, **16'** is attached to the stapling apparatus **10**, the sensor link **182** is biased distally by spring **531**. When in that "unloaded" position, the proximal end **537** of the proximal locking arm **535** disengages the locking pawl **54** to retain the locking pawl **54** in the locked position wherein the locking protrusion **55** is received in cavity **512** to retain actuation shaft **46** in a longitudinally fixed position. Thus, when no disposable loading unit **16**, **16'** is coupled to the surgical stapling apparatus **10**, the stapling apparatus **10** cannot normally be fired.

The sensor link **182** may further have a downwardly extending distal tab **534** formed thereon for contact with a flange **179** formed on a sensor cylinder **178**. See FIGS. **4** and **5**. As will be discussed in further detail below, a sensor tube **176** is oriented to interface with the sensor cylinder **178**. See FIG. **10**. Sensor link **182** may further have a spring arm **536** with a downwardly extending end **538** which engages a camming surface **83***a* on pivotable locking member **83**. See FIG. **7**. When a disposable loading unit **16**, **16'** is coupled to the distal end of elongated body **14**, the disposable loading unit **16**, **16'** engages the distal end of the sensor tube **176** to drive sensor tube **176** proximally, and thereby drive sensor cylinder **178** and sensor link **182** proximally. Movement of sensor link **182** proximally causes end **538** of spring arm **536** to move proximally of camming surface **83***a* to allow locking member **83** to pivot under the bias of a spring **92** from a position permitting firing of stapling apparatus **10** (i.e., permit the actuation of actuation shaft **46**) to a blocking

position, wherein the locking gate **88** is received in the locking detent **53** in actuation shaft **46** and prevent firing of stapling apparatus **10**. Sensor link **182** prevents firing when a disposable loading unit **16** is absent. Locking member **83** prevents firing when closing and opening the anvil assembly **20**. Also, as the sensor link **182** is moved proximally, the proximal end **537** of the proximal locking arm **535** serves to pivot the locking pawl **54** such that the locking protrusion **55** moves out of cavity **512** to permit actuation shaft **46** to be actuated. See FIG. **8**.

As shown in FIG. **4**, the handle housing **36** may include an annular channel **117** configured to receive an annular rib **118** formed on the proximal end of rotation knob **28**, which is preferably formed from molded half-sections **28***a* and **28***b* that may be interconnected by screws **29**. Annular channel **117** and rib **118** permit relative rotation between rotation knob **28** and handle housing **36**. As illustrated in FIG. **4**, elongated body **14** may include an outer casing **124** that is sized to support a sensor tube **176** (shown in FIG. **10**) and articulation link **123**. Such assembly of components **123**, **124**, **176**, and **52** is, at times referred to herein as a "control rod assembly **125**", and may include other components journaled on the control rod **52**. The proximal end of casing **124** includes diametrically opposed openings **128**, which are dimensioned to receive radial projections **132** formed on the distal end of rotation knob **28**. See FIGS. **4** and **5**. Projections **132** and openings **128** fixedly secure rotation knob **28** and elongated body **14** in relation to each other, both longitudinally and rotatably. Rotation of rotation knob **28** with respect to handle assembly **12** thus results in corresponding rotation of elongated body **14** about longitudinal axis L-L with respect to handle assembly **12**. It will also be appreciated that because the disposable loading unit **16**, **16'** is coupled to the distal end of the elongated body **14**, rotation of the elongated body **14** also results in the rotation of the disposable loading unit **16**, **16'**.

In various embodiments, an articulation mechanism **120** may be supported on rotatable knob **28** and include an articulation lever **30** and a cam member **136**. See FIG. **11**. Articulation lever **30** may be pivotably mounted about pivot pin **140** which may be threadedly attached to rotation knob **28**. A shifting pin **142** may be received in a socket **131** in the bottom of articulation lever **30** and extend downwardly therefrom for engagement with cam member **136**. Cam member **136** may include a housing **144** that has an elongated slot **146** extending through one side thereof. A pair of camming plates **136***a*, **136***b* may be coupled to housing **144** by a pair of rivets **145** or other suitable fasteners to form a camming plate assembly **137**. In other embodiments, the camming plate assembly **137** may be integrally formed with the housing **144**. The camming plates **136***a* and **136***b* may have a stepped camming surface **148***a*, **148***b*, respectively that form a stepped camming surface **148**. Each step of camming surface **148** corresponds to a particular degree of articulation of stapling apparatus **10**. Elongated slot **146** is configured to receive shifting pin **142** protruding from articulation lever **30**. Camming plate assembly **137** is attached to housing **144** in such a manner so as to form a distal stepped portion **150** and a proximal stepped portion **152**. Proximal stepped portion **152** includes a recess **154**.

As can be seen in FIG. **4**, the articulation mechanism **120** may further include a translation member **138** that has an upstanding arm portion **540** that has a notch **542** therein that is sized to receive a tab **544** formed on the sensor cylinder **178**. The distal end of translation member **138** may include an arm **546** which includes an opening **548** configured to receive a finger **164** extending from the proximal end of articulation link **123**. See FIGS. **4** and **10**. A pin **166** that may be constructed from a non-abrasive material, e.g., Teflon®, is secured to translation member **138** and dimensioned to be received within stepped camming surface **148**. In an assembled condition, distal and proximal stepped portions **150** and **152** of cam member **136** are positioned beneath flanges **170** and **172** formed on rotation knob **28** to restrict cam member **136** to transverse movement with respect to the longitudinal axis "L-L" of stapling apparatus **10**. When articulation lever **30** is pivoted about pivot pin **140**, cam member **136** is moved transversely on rotation knob **28** to move stepped camming surface **148** transversely relative to pin **166**, forcing pin **166** to move proximally or distally along stepped camming surface **148**. Since pin **166** is fixedly attached to translation member **138**, translation member **138** is moved proximally or distally to effect corresponding proximal or distal movement of the articulation link **123**.

The sensor cylinder **178** may have a nub portion **544** configured to be received within recess **154** in the camming plate assembly **137**. When an articulating disposable loading unit **16** is operably coupled to the distal end of elongated body **14** of stapling apparatus **10**, the nub **544** moves proximally of recess **154** in cam member **136**. With nub **544** positioned proximally of recess **154**, cam member **136** is free to move transversely to effect articulation of stapling apparatus **10**. As explained in U.S. Pat. No. 5,865,361, a non-articulating disposable loading unit **16'** does not have an extended insertion tip. As such, when a non-articulating disposable loading unit **16'** is inserted in elongated body **14**, sensor cylinder **178** is not moved proximally a sufficient distance to move nub **544** from recess **154**. Thus, cam member **136** is prevented from moving transversely by nub **544** which is positioned in recess **154** and articulation lever **30** is locked in its central position.

As can be seen in FIGS. **4-9**, this embodiment may also include a firing lockout override assembly **600** that has an override button **601** that has an override wire **602** attached thereto. The override wire **602** may be slidably supported within wire form retention tabs **606** formed on the top surface **604** of the internal frame assembly **510**. A distal end **610** of the override wire **602** is mounted in a hole **539** in the distal end of the sensor link **182**. When the override button **601** is moved in the proximal direction "PD", the override wire **602** pulls the sensor link **182** proximally which biases the locking pawl **54** out of locking engagement with the actuation shaft **46** and also causes end **538** of spring arm **536** to move proximally of camming surface **83***a* to allow locking member **83** to pivot under the bias of spring **92** from a position permitting firing of stapling apparatus **10** (i.e., permit the actuation of actuation shaft **46**) to a blocking position, wherein the locking gate **88** is received in the locking detent **53** in actuation shaft **46** and prevents firing of stapling apparatus **10** unless the plunger **82** is depressed.

Referring to FIGS. **1**, **2**, **9** and **10**, to use stapling apparatus **10**, a disposable loading unit **16**, **16'** is first secured to the distal end of elongated body **14**. The stapling apparatus **10** can be used with articulatable disposable loading units **16** and non-articulatable disposable loading units **16'** that each have, for example, linear rows of staples between about 30 mm and about 60 mm. A method of coupling a disposable loading unit **16**, **16'** to elongated body **14** is disclosed in U.S. Pat. No. 5,865,361. When the insertion tip of the disposable loading unit **16**, **16'** engages the distal end of sensor tube **176**, the disposable loading unit sensing mechanism is actuated. As the insertion tip engages and moves sensor tube **176** proximally, the sensor tube **176** effects proximal movement of sensor cylinder **178** and sensor link **182** in the

proximal "PD" direction to pivot locking member **83** counter-clockwise, from a non-blocking position to a position wherein gate **88** blocks movement of actuation shaft **46**.

When a disposable loading unit **16**, **16'** is coupled to stapling apparatus **10**, tool assembly **17** can be positioned about a target tissue. To clamp the target tissue between the staple forming anvil **20** and cartridge assembly **18**, movable handle **24** is pivoted toward the stationary handle portion **22** against the bias of torsion spring **40** to move driving pawl **42** into engagement with a shoulder **322** on actuation shaft **46**. Engagement between shoulder **322** and driving pawl **42** advances actuation shaft **46** distally and thus advances control rod **52** distally. Control rod **52** is connected at its distal end to the axial drive assembly in the disposable loading unit **16**, **16'**, including the drive beam therein, such that distal movement of control rod **52** effects distal movement of the drive beam in the distal direction to thereby cause the staple forming anvil **20** to pivot closed in the manner described in U.S. Pat. No. 5,865,361. In various embodiments, one complete stroke of movable handle **24** may advance actuation shaft **46** approximately 15 mm which may be sufficient to clamp tissue during the first stroke but not to fire staples. The actuation shaft **46** is maintained in its longitudinal position after the movable handle **24** is released by the locking gate **88** which is biased into the detent **53** in the bottom of the actuation shaft **46**. Upon release of movable handle **24**, drive pawl **42** moves over rack **48** as torsion spring **40** returns handle **24** to a position spaced from stationary handle **22**. In this position, driving pawl **42** is urged into engagement with toothed rack **48** to further retain actuation shaft **46** in its longitudinal fixed position.

To "fire" the staples supported within the cartridge assembly **18** (i.e., drive the staples into the staple forming anvil **20**), movable handle **24** is actuated again. In various embodiments, the stapling apparatus **10** may be capable of receiving disposable loading units **16**, **16'** having linear rows of staples of between about 30 mm and about 60 mm. In such arrangements, the stapling apparatus **10** may be configured such that each stroke of the movable handle **24** advances actuation shaft **46** 15 mm. Because one stroke is required to clamp tissue, the movable handle **24** must be actuated (n+1) strokes to fire staples, where n is the length of the linear rows of staples in the disposable loading unit attached to the stapling apparatus **10** divided by 15 mm.

Before the staples may be fired, firing lockout assembly **80** must be actuated to move locking gate **88** from its blocking position to a non-blocking position. This may be accomplished by activating plunger **82** to cause camming surface **85** to engage the sidewalls of slot **89** of locking member **83** and thereby pivot locking member **83** in the counterclockwise direction in FIG. **9**. Thereafter, movable handle **24** may be actuated an appropriate number of strokes to advance actuation shaft **46**, and thus control rod **52** and drive beam in the distal direction "DD" to fire the disposable loading unit **16**, **16'** in a known manner. To retract actuation shaft **46** and thus control rod **52** and the drive member of the disposable loading unit **16**, **16'** after firing staples, retraction knobs **32***a*, **32***b* may be pulled proximally causing pins **66** to move release plate **64** in the direction indicated by arrow "J" in FIG. **7** over teeth **49** to disengage drive pawl **42** from engagement with teeth **49** of the toothed rack **48**.

Those of ordinary skill in the art will understand that the disposable loading units **16**, **16'** are sterilized and packaged in sterile packaging materials prior to use. Likewise, the stapling apparatus **10** is also sterilized prior to use. After the disposable loading unit **16**, **16'** is used, it is discarded. While the stapling apparatus **10** could also conceivably be re-sterilized for additional uses, those prior instruments such as those described in the aforementioned U.S. Pat. No. 5,865,361 and other known instruments adapted for use with disposable loading units are not well-suited for easy disassembly to facilitate sterilization of their various internal components. Consequently, such units are often disposed of after a single use. As will be further explained below, the stapling apparatus **10** is constructed to facilitate easy disassembly to permit the stapling apparatus **10** to be reprocessed (i.e., re-sterilized).

FIG. **12** depicts the stapling apparatus **10** after it has been used and the disposable loading unit (not shown) has been decoupled therefrom (action **700** in FIG. **14**). The stippling **620**, **622** represents exemplary areas of contamination on the elongated body **14** and the handle assembly **12**, respectively. To begin the reprocessing of the stapling apparatus **10**, the user moves the firing override button **601** proximally and holds the override button **601** in that proximal position (action **702**). Such action moves the sensor link **182** proximally in the above-described manner and permits the user to actuate the actuation shaft **46**. The user also moves the plunger **82** to enable the movable handle **24** to be cycled to actuate the actuation shaft **46**. The user may then repeatedly cycle the movable handle **24** (represented by arrow "R" in FIG. **13**) to extend the control rod **52** such that the contaminated portion **624** of the control rod **52** extends out of the casing **124** (action **704**). See FIG. **13**. The user may then insert the exposed contaminated portion **624** of the control rod **52** and the distal end of the casing **124** into an appropriate cleaning or sterilization medium **630** such as, for example, Ethylene Oxide, Peroxide, etc. (action **706**). See FIG. **15**.

To sterilize the handle assembly **12**, the handle assembly **12** may be easily disassembled (action **708**). Referring again to FIG. **5**, the user may separate the rotation knob segments **28***a* and **28***b* by removing the screws or fasteners **29** (action **710**). The rotation knob segments **28***a* and **28***b*, as well as the translation member **138**, are removed and laid aside (action **712**). The right and left retract knobs **32***a*, **32***b* are then pulled off of the coupling rod **60** (action **714**). The three quick release fasteners **400** may then be removed from the left hand housing portion **36***b*—unless the fasteners **400** are loosely coupled thereto (action **716**). The handle housing segment **36***b* may then be laid aside (action **718**). The user may then lift the firing assembly **500** from the housing segment **36***a* and place it on a flat surface (action **720**). The user may then grasp the distal end of the control rod **52** and rotate it vertically (represented by arrow "V" in FIG. **5**—action **722**). The control rod **52** may then be pulled from the cavity **47** in the actuation shaft **46** as shown in FIG. **4** (action **724**). The user may then detach the sensor cylinder **178** from the proximal end of the sensor tube **176** (action **726**). Thus, the stapling apparatus **10** may be separated into the parts shown in FIG. **4**. The user may then select a desired cleaning/sterilization cycle (action **730**). See FIG. **16**. In particular, the user may choose between a "wet" cleaning cycle wherein the components are submerged in an appropriate cleaning solution **630** (FIG. **17**) or a "dry" cleaning cycle wherein radiation is employed or a combination of both cycles may be employed. Those of ordinary skill in the art will recognize that FIG. **17** only illustrates some of the handle assembly components being submerged in the cleaning medium **630**. It will be appreciated that it is intended that all of the handle assembly components be submerged either simultaneously (if the container is large enough) or one at a time or in small groups until all of the components have been cleaned (action **732**). It will be appreciated, however, those

components that have been worn or damaged may be replaced with new sterilized components to complete the assembly. The reservoir **632** containing the cleaning medium **630** may be agitated or the cleaning medium may be stirred or otherwise agitated using conventional methods to drive the cleaning medium **630** through the openings **511** in the internal frame assembly **510** into contact with all of the components retained therein (action **734**). After the components have all been exposed to the cleaning medium **630** for a desired amount of time, the components may be removed from the cleaning medium **630** and then air dried or dried utilizing other conventional methods (action **736**).

After the components have been cleaned by the cleaning medium (actions **732-736**), the user may also choose to irradiate the components (actions **740**, **742**) or the user may elect not to irradiate the components (action **744**) at which point the user then may lubricate certain components (action **746**) as will be discussed in further detail below. If the user elects to irradiate the disassembled components either after wet cleaning the components or in lieu of wet cleaning, the user may lay all of the component parts on an appropriate tray or other object (not shown). Radiation may then be applied to the components using convention irradiation techniques. For example, electron beam radiation may be employed. Other forms of vapor sterilization mediums, such as for example, Ethylene Oxide vapor mediums, Peroxide vapor mediums may also be employed.

After the components have been sterilized, certain components may be lubricated (action **746**). As can be seen in FIG. **18**, in various components, lubrication instructions **770** may be embossed or otherwise provided on the internal frame assembly **510**. A sterile lubrication medium such as, for example, Sodium Sterate may be applied to the various components as shown in FIG. **18**.

The components may then be reassembled as outlined in FIG. **19**. To assist with the assembly of the components, a sterile assembly member or tray **790** that has a series of complementary cavities **792**, **794** therein may be employed. See FIG. **20**. One method of reassembly includes the action **750** which comprises placing the rotation knob segment **28***a* in the complementary shaped cavity **792** in the assembly tray **790**. The retract knob **32***a* may be placed in the complementary cavity **794** (action **752**). The first housing segment **36***a* may be placed in the complementary cavity **796** (action **754**). The translation member **138** may be placed into the right hand rotation member **28***a* with the pin **166** attached thereto inserted into the stepped cam slot **148** in the cam member **136** that is mounted under the flanges **170**, **172** in the right hand rotation knob segment **28***a* (action **756**). The sensor cylinder **178** may be placed onto the proximal end of the control rod **52** (action **758**). The control rod assembly **125** is oriented vertically with the distal end up. The sensor cylinder **178** is retained on the control rod **52** (action **760**). The proximal end of the control rod **52** is inserted into the cavity **47** in the actuation shaft **46** (action **762**). The control rod assembly **125** is then rotated downward to the left to complete the attachment to the actuation shaft **46** (action **764**). The sensor cylinder **178** is rotated until tab **544** is downward (action **766**). The joined firing assembly **500** and control rod assembly **125** is inserted into the first handle housing segment **36***a* and the right hand rotation knob segment **28***a* in the corresponding cavities **798**, **792**, **796** in the assembly tray **790**. The lockout tab **544** on the sensor cylinder **178** is inserted into the notch **542** in the translation member **138** (action **768**). The coupling rod **60** may be aligned for insertion into a hole (not shown) in the right hand retract knob **32***a* (action **770**). The second handle housing segment **36***b* is then placed over the assembly and aligned to enable the quick release fasteners **400** to couple the handle housing segments **36***a*, **36***b* together (action **772**). The rotation knob segment **28***b* may be oriented to mate with the rotation knob segment **28***a* and coupled thereto with screws **29** (action **774**). The left hand retract knob **32***b* may then be pressed onto the retraction shaft **60** to complete the assembly (action **776**).

The firing lockout assembly **80** described above, as well as the firing lockout assembly disclosed in the aforementioned U.S. Pat. No. 5,865,361, can be difficult to use because the clinician must depress the plunger **82** to enable actuation shaft **46** to be actuated by cycling the movable handle **24**. Such arrangement generally requires the clinician to use both hands (one to hold onto the handle assembly and actuate the movable handle and the other hand to depress the plunger **82**). It would be more desirable to have a surgical stapling apparatus that has a more ergonomically efficient firing lockout trigger arrangement that does not require the clinician to use both hands to fire the instrument. FIGS. **21-33** illustrate a stapling apparatus **810** that is substantially similar to the stapling apparatus **10** described above or maybe substantially similar to the stapling apparatus described in U.S. Pat. No. 5,865,361 or other prior surgical instruments that employ the plunger-type lockout assembly, except that stapling apparatus **810** employs a firing lockout system **880** that is much easier to use and does not require both hands to fire the instrument.

Referring to FIGS. **21** and **22**, handle assembly **12** includes a handle housing **36**, which is preferably formed from molded handle housing segments **36***a* and **36***b*, which collectively form stationary handle member **22** and barrel portion **26** of handle assembly **12**. A movable handle **824** may be pivotably supported between handle housing segments **36***a* and **36***b* about pivot pin **38**. See FIG. **22**. A biasing member **40**, that may comprise a torsion spring, biases movable handle **824** away from stationary handle **22**. An actuation shaft **46** may be supported within barrel portion **26** of handle housing **36** and includes a rack **48** of teeth **49**. A driving pawl **42** that has a rack engagement tooth **43** thereon may be pivotably mounted to one end of movable handle **824** about a pivot pin **44**. A biasing member **50**, which may comprise a torsion spring, may be employed to urge driving pawl **42** towards rack **48** on actuation shaft **46**. As movable handle **824** is actuated (e.g., pivoted), it moves driving pawl **42** such that rack engagement tooth **43** drivingly engages toothed rack **48** of actuation shaft **46** to advance the actuation shaft **46** linearly in the distal direction "DD". The forward end of actuation shaft **46** has a cavity **47** formed therein to receive the proximal end **53** of a control rod **52** (FIG. **23**) such that linear advancement of actuation shaft **46** causes corresponding linear advancement of control rod **52**.

The stapling apparatus **810** may further have a locking pawl **54** that has a rack locking member **55** that may be pivotably mounted within the handle housing **36** about pivot pin **57** and is biased towards toothed rack **48** by biasing member **56**, which is also preferably a torsion spring. Rack locking protrusion **55** of locking pawl **54** is oriented for movement into a cavity **512** in actuation shaft **46**, such that when rack locking protrusion **55** is in the cavity **512**, actuation shaft **46** is retained in a longitudinally fixed position when no disposable loading unit has been coupled to the stapling apparatus **810**.

Various embodiments may also include a retraction mechanism **58** that may comprise a right retractor knob **32***a* and a left retractor knob **32***b* that are connected to the

proximal end of actuation shaft **46** by a coupling rod **60**. See FIG. **22**. Coupling rod **60** may include right and left engagement portions **62***a* and **62***b* for receiving retractor knobs **32***a*, **32***b* and a central portion **62***c* which is dimensioned and configured to translate within a pair of longitudinal slots **34***a* respectively formed in actuation shaft **46** adjacent the proximal end thereof. A release plate **64** may be operatively associated with actuation shaft **46** and is mounted for movement with respect thereto in response to manipulation of retractor knobs **32***a*, **32***b*. A pair of spaced apart pins **66** may extend outwardly from a lateral face of actuation shaft **46** to engage a pair of corresponding angled cam slots **68** formed in release plate **64**. Upon movement of retractor knobs **32***a*, **32***b* in the proximal direction "PD", pins **66** can release plate **64** downwardly with respect to actuation shaft **46** and with respect to toothed rack **48** such that the bottom portion of release plate **64** extends below toothed rack **48** to disengage engagement tooth **43** of driving pawl **42** from toothed rack **48**. A slot **70** may be formed at the proximal end of release plate **64** to accommodate the central portion **62***c* of coupling rod **60**, and elongated slots **34** are provided in the barrel section **26** of handle assembly **12** to accommodate the longitudinal translation of coupling rod **60** as retraction knobs **32***a*, **32***b* are pulled in the proximal direction "PD" to retract actuation shaft **46** and thus retract control rod **52** rearwardly.

The stapling apparatus **810** may further include a sensor link **882** that may be slidably attached to the handle housing segment **36***a* by a pin or screw **530** that extends through a slot **532** in the sensor link **882** such that the sensor link **882** may slide longitudinally relative to the handle housing **36**. A distal end of a spring **531** may be attached to the screw **530** and the proximal end of the spring **531** may be hooked over a hook **533** on the sensor link **882**. See FIG. **22**. Spring **531** serves to bias the sensor link **882** in the distal direction "DD". The sensor link **882** further includes a proximal locking arm **535** that has an inwardly protruding proximal end **537** configured to interact with the locking pawl **54**. In particular, when no disposable loading unit **16**, **16'** is attached to the instrument **810**, the sensor link **882** is biased distally by spring **531**. When in that "unloaded" position, the proximal end **537** of the proximal locking arm **535** disengages the locking pawl **54** to retain the locking pawl **54** in the locked position wherein the locking protrusion **55** is received in cavity **512** to retain actuation shaft **46** in a longitudinally fixed position. Thus, when no disposable reload unit **16**, **16'** is coupled to the instrument **810**, the instrument **810** cannot be fired.

Referring to FIG. **23**, a disposable loading unit sensing mechanism may extend within stapling apparatus **810** from elongated body **14** into handle assembly **12**. The sensing mechanism may include a sensor tube **176** which is slidably supported within the outer casing **124**. The distal end of sensor tube **176** is positioned towards the distal end of elongated body **14** and the proximal end of sensor tube **176** is secured within the distal end of a sensor cylinder **178'** via a pair of nubs **180'**. The distal end of a sensor link **882** is oriented in abutting relationship with the flanged proximal end **190'** of sensor cylinder **178'**.

The sensor link **882** may further have a downwardly extending distal tab **534** formed thereon for contact with a flange **179** formed on a sensor cylinder **178'**. See FIGS. **22** and **23**. As will be discussed in further detail below, a sensor tube **176** is oriented to interface with the sensor cylinder **178'**. See FIG. **23**. When a disposable loading unit **16**, **16'** is coupled to the distal end of elongated body **14**, the disposable loading unit **16**, **16'** engages the distal end of the sensor tube **176** to drive sensor tube **176** proximally, and thereby drive sensor cylinder **178'** and sensor link **882** proximally. As the sensor link **882** is moved proximally, the proximal end **537** of the proximal locking arm **535** to pivot the locking pawl **54** such that the locking protrusion **55** moves out of cavity **512** to permit actuation shaft **46** to be actuated.

The stapling apparatus **810** may also employ an articulation mechanism **120** of the type and construction described in detail above, with the following noted differences. In various embodiments, an articulation mechanism **120** may be supported on rotatable knob **28** and include an articulation lever **30**, a cam member **136** and a translation member **138'**. In various embodiments, translation member **138'** may include a plurality of ridges **156** which are configured to be slidably received within grooves (not shown) formed along the inner walls of rotation knob **28**. Engagement between ridges **156** and those grooves prevent relative rotation of rotation knob **28** and translation member **138'** while permitting relative linear movement. The distal end of translation member **138'** may include an arm **160** which includes an opening **162** configured to receive a finger **164** extending from the proximal end of articulation link **123**. See FIG. **23**.

In an assembled condition, proximal and distal stepped portions **150** and **152** of cam member **136** are positioned beneath flanges **170** and **172** formed on rotation knob **28** to restrict cam member **136** to transverse movement with respect to the longitudinal axis "L-L" of stapling apparatus **810**. When articulation lever **30** is pivoted about pivot pin **140**, cam member **136** is moved transversely on rotation knob **28** to move stepped camming surface **148** (refer to FIG. **11**) transversely relative to pin **166**, forcing pin **166** to move proximally or distally along stepped cam slot **148**. Since pin **166** is fixedly attached to translation member **138'**, translation member **138'** is moved proximally or distally to effect corresponding proximal or distal movement of first actuation link **123**. See FIGS. **23** and **24**.

Referring again to FIG. **24**, cam member **136** may include a recess **154**. A locking ring **184** having a nub portion **186** configured to be received within recess **154** is positioned about sensor cylinder **178'** between a control tab portion **188'** and a proximal flange portion **190'**. See FIG. **23**. A spring **192'** positioned between flange portion **190'** and locking ring **184** urges locking ring **184** distally about sensor cylinder **178'**. When an articulating disposable loading unit **16** having an extended tip portion is inserted into the distal end of elongated body **14** of stapling apparatus **810**, insertion tip causes control tab portion **188'** to move proximally into engagement with locking ring **184** to urge locking ring **184** and nub portion **186** proximally of recess **154** in cam member **136**. With nub portion **186** positioned proximally of recess **154**, cam member **136** is free to move transversely to effect articulation of stapling apparatus **810**. Other non-articulating disposable loading units may not have an extended insertion tip. As such, when a non-articulating disposable loading unit **16** is coupled to elongated body **14**, sensor cylinder **178'** is not retracted proximally a sufficient distance to move nub portion **186** from recess **154**. Thus, cam member **136** is prevented from moving transversely by nub portion **186** of locking ring **184** which is positioned in recess **154** and articulation lever **30** is locked in its central position.

Referring to FIG. **23**, the distal end of elongated body **14** may include a control rod locking mechanism **900** which may be activated during coupling of a disposable loading unit **16**, **16'** with the distal end of elongated body **14**. Control rod locking mechanism **900** may include a blocking plate **902** which is biased distally by a spring **904** and includes a

proximal finger **906** having angled cam surface **908**. In various embodiments, a firing shaft lock **910** that has a lock tab **912** protruding therefrom may be employed. The lock tab **912** may be configured to selectively engage a notch **914** in the control rod **52**. The firing shaft lock **910** may be provided with a biasing member in the form of a leaf spring (not shown) or the like and have a lock pin **916** extending therethrough. The leaf spring serves to bias the firing shaft lock **910** outwardly when the proximal end of the blocking plate **902** is forward in a distal position. Blocking plate **902** may be movable from a distal position spaced from lock tab **912** to a proximal position located behind lock tab **912**. In the proximal position, the blocking plate **902** causes the lock tab **912** to extend through a slot **918** in the sensor tube **176** into engagement with notch **914** in the control rod **52**.

During insertion of a disposable loading unit **16**, **16'** into the distal end of elongated body **14**, as will be described in further detail below, cam surface **908** of blocking plate **902** is engaged by a nub on the disposable loading unit **16**, **16'** as the disposable loading unit **16**, **16'** is rotated into engagement with elongated body **14** to urge plate **902** to the proximal position. Locking tab **912**, which is positioned within notch **914**, is retained therein by blocking plate **902** while the nub engages cam surface **908** to prevent longitudinal movement of control rod **52** during assembly. When the disposable loading unit **16**, **16'** is properly positioned with respect to the elongated body **14**, the nub on the proximal end of the disposable loading unit **16**, **16'** passes off cam surface **908** allowing spring **904** to return blocking plate **902** to its distal position to permit subsequent longitudinal movement of control rod **52**. It is noted that when the disposable loading unit nub passes off cam surface **908**, an audible clicking sound may be produced indicating that the disposable loading unit **16**, **16'** is properly fastened to the elongated body **14**.

Referring now to FIGS. **22**, **25** and **26**, the stapling apparatus **810** may employ an improved firing lockout assembly **880**. In this embodiment, the movable handle **824** may be provided with a cavity **930** sized to receive a proximal portion of a firing release trigger **932**. As can be seen in those Figures, the firing release trigger **932** may have a nub **934** formed thereon and a release spring **936** may extend between the bottom of the cavity **930** and the nub **934** to apply a biasing force to the firing release trigger **932** in the "A" direction. As can be most particularly seen in FIG. **26**, the firing release trigger **932** may have a proximal tail portion **940** that is sized to slidably extend into a slot **825** formed in the movable handle **824** as the firing release trigger is depressed in the "B" direction. The improved firing lock out assembly **880** may further include a gear linkage assembly **950**. In various embodiments, the gear linkage assembly **950** may include a first gear **952** that is rotatably received on a first gear pin **954** that is attached to the movable handle **824**. First gear **952** may have a first gear segment **956** that is arranged for meshing engagement with a release trigger gear rack **960** formed on the tail portion **940** of the firing release trigger **932**. First gear **952** may be linked to a release pawl **970** by a first connector link **972** that is pivotally pinned or otherwise attached to the first gear **952** and the release pawl **970**. As can be seen in FIGS. **22** and **25**, the release pawl **970** may be pivotally supported on pin **38**.

In various embodiments, release pawl **970** may have an engagement portion **974** that is configured to engage a release pin **980** that is attached to a second connector link **982** and is constrained to ride in an arcuate slot **826** formed in the movable handle **824**. As the present Detailed Description proceeds, it will become apparent that the slot **826** prevents actuation of the movable handle **824** from moving the second connector link **982**. The second connector link **982** may also be pivotally pinned or attached to a gate gear **990** that is rotatably journaled on a gear pin **992** that is supported by handle housing segments **36***a*, **36***b*. Gate gear **990** has a segment of gear teeth **994** thereon oriented for meshing engagement with a gate rack **998** formed on a locking gate **996**. The locking gate **996** may have a slot **997** therein that is adapted to receive a portion **1002** of a gate spring **1000** that is supported on a gate pin **1004** that extends between the handle housing segments **36***a*, **36***b*. Gate spring **1000** serves to bias the locking gate **996** in the "C" direction. See FIG. **26**.

Operation of the firing lockout assembly **880** will now be described with reference to FIGS. **27-30**. FIG. **27** illustrates the stapling apparatus **810** prior to clamping tissue in the disposable loading unit (not shown). As can be seen in that Figure, the engagement portion **974** of the release pawl **970** is not in contact with the release pin **980** at this stage of operation. As can also be seen, the upper end of the locking gate **996** is at the distal end of the actuation shaft **46**. FIG. **28** illustrates a first actuation of movable handle **824** to cause the staple forming anvil of the disposable loading unit to close in the manner described above. The clinician has not yet depressed the firing release trigger **932** and has conveniently placed his or her index finger behind the actuation portion **933** of the firing release trigger **932**. By actuating the movable handle **824**, the actuation shaft **46** is driven in the distal direction "DD" by the driving pawl **42** in the manner described above. As can be seen in FIG. **28**, the actuation shaft **46** has moved to a position wherein the end of the locking gate **996** has entered into the locking detent **53** in the actuation shaft **46** and corresponding locking detent **53'** in the release plate **64**. As more easily seen in FIG. **25**, the upper end of the locking gate **996** has a chamfered or tapered portion **999** formed thereon that meets with the vertical extending proximal side **1005** of the locking gate **996**. As can also be seen in FIG. **25**, the locking detent **53** in the actuation shaft **46** has angled surfaces **1006**, **1007** and also a vertical ledge portion **1008**. When the upper end of the locking gate **996** is completely biased into the locking detent **53** by the gate spring **1000**, the proximal side **1005** of the locking gate **996** is in confronting relationship with the vertical ledge **1008** in the actuation shaft **46** to thereby prevent movement of the actuation shaft **46**. However, when the locking gate **996** is pulled in the direction "D", the angled surfaces **1006**, **1007**, as well as the chamfered surface **999** on the locking gate **996**, enable the actuation shaft **46** to move longitudinally past the locking gate **996** without the locking gate **996** having to be completely biased out of contact with the actuation shaft **46**.

Returning to FIG. **28**, when in that position, the slot **826** in the movable handle **824** permitted the movable handle to be pulled toward the stationary handle portion **22** without causing the pin **980** to move the second connection link **982** which in turn would actuate the locking gate **996**. As can be seen in FIG. **28**, the spring **1000** has biased the locking gate **996** into the blocking position wherein the locking gate **996** is received in locking detents **53**, **53'** and the proximal surface **998** thereof is in confronting relationship with the vertical ledge **1008** in the actuation shaft **46**. After the movable handle **824** has been pulled to the first position shown in FIG. **28** to close the staple forming anvil, the clinician then permits the movable handle **824** to move to the position illustrated in FIG. **29** under the biasing force of the handle closure spring **40**. At this stage, the retractor knobs **32***a*, **32***b* could be pulled proximally to cause the staple

forming anvil to unclamp the tissue in the event that the clinician wishes to re-manipulate the tool **17** or, the clinician may wish to commence the firing cycle by placing his or her index finger on the actuation portion **933** of the firing release trigger **932** as illustrated in FIG. **30**.

In FIG. **31**, the clinician has depressed the firing release trigger **932**. Such action causes the release trigger gear rack **960** in the release trigger tail portion **940** to mesh with the first gear segment **956** on the first gear **952** to cause the first gear **952** to rotate in the counterclockwise direction "CCW". As the first gear **952** rotates in the counterclockwise direction, it pushes the first connector link **972** in the "E" direction, causes the release pawl **970** to rotate in the clockwise "C" direction. As the release pawl **970** rotates in the "C" direction, the engagement surface **974** contacts release pin **980** and draws the second connection link **982** in the "F' direction. As the second connector link **982** moves in the "F" direction, it causes the gate gear **990** to rotate in the counterclockwise direction "CCW". The gear teeth **994** on the gate gear **990** mesh with the gate rack **998** and drive the locking gate **996** in the "D" direction out of blocking engagement with the locking detents **53**, **53'**.

FIG. **32** illustrates the position of the locking gate **996** relative to the actuation shaft **46** as the actuation shaft **46** begins to move in the distal direction "DD" by actuating the movable handle **824**. As can be seen in that Figure, the upper chamfered portion **999** of the locking gate **996** is now in contact with the vertical edge **1005** in the actuation shaft **46** and permits the actuation shaft **46** to move distally. FIG. **33** illustrates the completion of a first firing stroke of the movable handle **824**. As can be seen in that Figure, the upper end of the locking gate **996** rides on the bottom of the actuation shaft **46** and the plate **64** as the actuation shaft **46** is advanced in the distal direction "DD". Link **982**, proximal end has moved to the proximal end of slot **826** during that stroke.

FIG. **34** illustrates an alternative stapling apparatus embodiment **810'** that employs an alternative firing lockout assembly **880'** that may be substantially the same as the firing lockout assembly **880** described above, except for the differences noted below. In particular, the firing lock out assembly **880'** employs a flexible bar **1020** that is constrained to move in a serpentine passage **828** formed in the movable handle **824'**. The flexible bar **1020** replaces the first gear **952**, the first connector link **972**, and the release pawl **970**. One end of the flexible bar **1020** is coupled to the firing release trigger **932** and the other end of the flexible bar **1020** is constrained to contact the release pin **980** which is also constrained to move in the slot **828**. Thus, as the firing release trigger **932** is depressed, the flexible bar **1020** pushes the release pin **980** which causes the second connector link **982** to move in the "F" direction. As the second connector link **982** moves in the "F" direction, the gate gear **990** moves in the counter clockwise direction "CC" and drives the locking gate **996** in the "D" direction. When the clinician releases the firing release trigger **932**, the release spring **936** drives the firing release trigger **932** in the "A" direction pulling the flexible bar **1020** away from the release pin **980**, thereby permitting the release pin **980** to move unconstrained in the slot **828**. As the release pin **980** is unconstrained, the gate spring **1000** is permitted to bias the locking gate **996** in the "C" direction. As the locking gate **996** is biased in the "C" direction, the gate gear **990** is driven unconstrained in a clockwise "C" direction. Those of ordinary skill in the art will appreciate that the firing lockout arrangements **880**, **880'** described above enable the clinician to operate the instruments with one hand. This represents a vast improvement over those firing lockout systems disclosed in U.S. Pat. No. 5,865,361 and other prior stapling apparatuses configured for use with disposable loading units.

FIGS. **35-46** depict a surgical stapling apparatus **1210** that addresses at least some of the aforementioned problems associated with prior surgical stapling apparatuses that are designed to accommodate articulatable disposable loading units. More particularly and with reference to FIG. **35**, the surgical stapling apparatus **1210** may be substantially similar in construction as the various instruments described above, except for the selectively lockable rotation system **1220** and the articulation system **1320** (FIG. **36**) as will be described in detail below. Those components that are the same as the components employed in the above-mentioned embodiments will be labeled with the same element numbers and those of ordinary skill in the art can refer to the disclosure set forth hereinabove that explains their construction and operation.

In one embodiment, the surgical stapling apparatus **1210** may include a handle assembly **12** that has an elongated body **14** that is operably coupled thereto and which protrudes distally therefrom. A distal end of the elongated body **14** may be coupled to an articulatable disposable loading unit **16**. The disposable loading unit **16** may include a tool assembly **17** that is selectively articulatable about an articulation axis "A1-"A1" by articulation motions transferred thereto by the elongated body **14** as is known. See FIG. **35**. In various embodiments of the present invention, the proximal end of the elongated body **14** may be coupled to a rotatable shroud **1260** that is coupled to handle housing **36'**. As can be seen in FIGS. **36**, **44** and **45**, handle housing **36'** may include an annular channel **117** configured to receive an annular rib **1262** formed on the proximal end of rotatable shroud **1260**, which is preferably formed from molded shroud segments **1260***a* and **1260***b*. Annular channel **117** and rib **1262** permit relative rotation between shroud **1260** and handle housing **36'**. Rotation of rotatable shroud **1260** causes the elongated body **14** and the disposable loading unit attached thereto to rotate about the longitudinal axis "L-L" defined by the elongated body **14**. Various embodiments of surgical stapling apparatus **1210** may include a selectively lockable rotation system **1220** for selectively locking the rotatable shroud **1260** to prevent rotation thereof (as well as rotation of elongated body **14** and disposable loading unit **16**) relative to the handle assembly **12** about the longitudinal axis "L-L".

In various embodiments, the lockable rotation system **1220** may include a cylindrical distal cover **1222** formed or otherwise provided on the distal end of the handle housing **36'**. FIG. **36** illustrates housing segment **36***a*' of handle housing **36'** that has one cover segment **1222***a* formed thereon. Those of ordinary skill in the art will understand that the housing segment **36***b*' of handle housing **36'** has a mating cover segment **1222***b* formed thereon that cooperates with cover segment **1222***a* to form distal cover **1222**. See FIG. **40**.

The lockable rotation system **1220** may further include a brake system **1229**. In particular, cover segment **1222***a* may have an internal spline section **1224***a* and cover segment **1222***b* may have an internal spline **1224***b*. Internal spline sections **1224***a*, **1224***b* cooperate to form an internal spline **1224** which is configured to support a brake tube **1230** of the brake system **1229**. In various embodiments, the brake tube **1230** has an external spline **1232** formed thereon that is sized to be received in internal spline **1224** in the distal cover **1222** such that the brake tube **1230** can move axially relative to

the distal cover **1222**, but is constrained to rotate therewith. The brake system **1229** may further include a brake band **1240** that interacts with a brake arm pin **1250** that is operably supported in a rotatable shroud **1260**. The operation of the brake arm pin **1250** and brake band **1240** will be discussed in further detail below.

The brake tube **1230** may be moved axially relative to the cylindrical distal cover **1222** by a switch bar **1270** that is operably connected to a selector switch assembly **1290**. As can be seen in FIG. **36**, the switch bar **1270** has a proximal end **1272** and a distal end **1276**. The proximal end **1272** may have a hole **1274** for receipt of a shaft portion **1294** of a selector switch **1292**. The shaft portion **1294** extends through the hole **1274** in the switch bar **1270** and is pinned thereto by a cross pin **1296**. In addition, the selector switch **1292** may have a fastener pin **1298** that pivotally couples the shaft portion **1294** to the housing **36'**. A detent spring **1300** may be employed to lock the selector switch **1292** in position. The detent spring **1300** may have a bulbous portion **1302** that is adapted to be engaged by the cross pin **1296** as the selector switch **1292** is pivoted distally and proximally about a axis "SA-SA" defined by fastener pin **1298**. See FIG. **36**. Thus, as the selector switch **1292** is pivoted to the proximal position (FIGS. **42**, **43** and **46**) and as the selector switch **1292** is pivoted to the distal position (FIGS. **37**, **38**, **41** and **45**) the bulbous portion **1302** of spring **1300** retains the selector switch **1292** and the switch bar **1270** in position.

Referring again to FIG. **36**, the distal end **1276** of the switch bar **1270** may have a connector pin **1278** protruding therefrom that is adapted to couple the switch bar **1270** to the brake tube **1230**. See FIG. **38**. Thus, linear movement of the switch bar in the proximal direction "PD" and distal direction "DD" causes the brake tube **1230** to also move in those directions within the cylindrical distal cover portion **1222**. As can also be seen in FIGS. **36-39** and **41-46**, the distal end **1276** of the switch bar **1270** may further have a bolt **1280** formed thereon or attached thereto. The bolt **1280** is adapted to selectively meshingly engage a rotation lock ring **1264** that comprises a series of teeth **1266** formed on or otherwise provided on the annular rib **1262**. As can be seen in FIG. **36**, the annular channel **117** in the cylindrical distal cover **1222** is formed by a inwardly extending flange **1226** that has a groove **1228** therethrough to receive the distal end **1276** of the switch bar **1270** therethrough. Thus, as will be discussed in further detail below, when the switch bar **1270** is moved in the distal direction "DD", the bolt **1280** can be brought into meshing engagement with the teeth **1266** of the rotation lock ring **1264** of the shroud **1260** and thereby prevent the shroud **1260** from rotating with respect to the cover **1222** and shroud **36**. See FIG. **44**.

Various embodiments of the surgical stapling apparatus **1210** may further include a unique and novel articulation system **1320** which, as will be described below, interfaces with the components forming the elongated body **14** to selectively apply articulation motions thereto for transfer to the disposable loading unit **16**. The articulation system **1320** may include a translation member **138'**. For example, the translation member **138'** may include a plurality of ridges **156** which are configured to be slidably received within grooves **1261** formed along the inner walls of the shroud **1260**. Engagement between ridges **156** and those grooves **1261** (FIGS. **36** and **37**) prevents relative rotation of the translation member **138'** and the shroud **1260** while permitting relative linear movement between those components. The distal end of translation member **138'** may include an arm **160** which includes an opening **162** configured to receive a finger **164** extending from the proximal end of articulation link **123**. See FIG. **37**. Also in this embodiment, the translation member **138'** has an articulation pin **166** protruding therefrom that extends through an articulation slot **1265** in the articulation shroud **1260**. The articulation pin **166** is received in a hole **1324** (FIG. **36**) formed in a linear articulation and rotation grip **1320** that is received on the shroud **1260**. The articulation system may further include a linear articulation and rotation grip **1322** that may be fabricated from two grip segments **1322*a***, **1322*b*** that are coupled together about the shroud **1260**. The hole **1324** may be provided in the grip segment **1322*a*** as shown in FIG. **36**. Thus, when the clinician moves the grip **1322** axially in the proximal direction "PD" and distal direction "DD", the translation member **138'**, as well as the articulation link **123**, moves in those directions to effectuate articulation of the articulatable disposable loading unit.

Also in this embodiment, the brake system **1229** may be configured to prevent actuation of the articulation system **1320**. For example, referring again to FIG. **36**, the band brake **1240** may be configured to be received within spaced shoulder flanges **1267** formed on the exterior of shroud **1260** to form a brake band groove **1269**. As can be seen in FIG. **36**, the brake band **1240** does not form a complete ring; the ends **1242** of the band brake **1240** are in spaced confronting relationship relative to each other to define a cam-receiving opening **1244** therebetween. The brake band **1240** is installed within the brake band groove **1269** such that the cam opening **1242** is oriented to receive a brake cam **1330** therein. Attached to the brake cam **1330** is a brake arm shift pin **1332** that extends through a brake cam hole **1334** in the shroud **1260**. As can be seen in FIG. **37** the brake arm shift pin **1332** is configured to be received within a shifting groove **1234** formed in the distal end of the brake tube **1230**. The linear articulation and rotation grip **1322** which comprises a portion of the articulation system **1320** has an undercut area **1326** therein to enable the grip **1320** to move axially relative to the shroud **1260**. In various embodiments, the grip segment **1322*a*** may be provided with a series of detents **1328** that is adapted to engage an indicator pin **1263** (FIG. **41**) protruding from the shroud **1260** such that as the grip **1320** is axially moved on the shroud **1260**, the indicator pin **1263** makes an audible click or sound as it engages the detents **1328**. Five detents **1328** are illustrated in that Figure; other numbers of detents **1328** may be used.

The operation of the surgical stapling apparatus **1210** will now be described with reference to FIGS. **37-39**, **41**, and **42-44**. FIGS. **37-39** illustrate the stapling apparatus **1210** in the "rotation" mode wherein the outer casing **124** may be selectively rotated about longitudinal axis "L-L". As can be seen in FIGS. **37** and **38**, the selector switch **1292** is pivoted to the distal position wherein the switch bar **1270** is pulled in the proximal direction "PD". When the switch bar **1270** is pulled in the proximal direction, the rotation bolt **1280** is disengaged from the rotation lock ring **1264** (FIG. **39**) thereby permitting the shroud **1260** to rotate about longitudinal axis "L-L". As discussed above, the proximal end of casing **124** includes diametrically opposed openings **128**, which are dimensioned to receive radial projections **132** formed inside the distal end of shroud **1260**. See FIGS. **36** and **38**. Projections **132** and openings **128** fixedly secure shroud **1260** and elongated body **14** in relation to each other, both longitudinally and rotatably. Rotation of shroud **1260** with respect to handle assembly **12** thus results in corresponding rotation of elongated body **14** about longitudinal axis L-L with respect to handle assembly **12**. Also, because the switch bar **1270** is coupled to the brake tube **1230** by connector pin **1278**, as the switch bar **1270** is moved in the

proximal direction "PD", the brake tube **1230** also moves in the proximal direction within the cylindrical distal cover **1222**. As explained above, the shift pin **1332** of the brake cam **1330** is received in a shifting groove **1234** in the brake tube **1230**. When the brake tube **1230** is moved proximally, the shift pin **1332** that is a distal feature of a radius arm that in turn is rigidly affixed to the pin **1250** rotates brake cam **1330** such that it forces the ends **1242** of the brake band **1240** radially outwardly to thereby lock the linear articulation and rotation grip **1322** to the shroud **1260**. The brake band **1240** prevents the grip **1322** from moving axially on the shroud **1260**; however, rotation of the grip **1322** causes the shroud **1260** to rotate about axis "L-L". Thus, when the selector switch **1292** is pivoted to the distal direction, the elongated body **14** and disposable loading unit attached thereto may be rotated about the longitudinal axis "L-L" by rotating the grip **1320**.

When the clinician desires to articulate the disposable loading unit, the selector switch **1292** is pivoted in the proximal direction "PD" illustrated in FIGS. **42**, **43** and **46**. As can be seen FIGS. **42**, **43** and **46**, when the selector switch **1292** is pivoted to the proximal direction, the switch bar **1270** is axially advanced in the distal direction "D-D" bringing the rotation bolt **1280** into locking engagement with the rotation lock ring **1264**. When the locking bolt **1280** is engaged with the rotation locking ring **1264**, the shroud **1260** (and the elongated body **14** and casing **124**) are unable to rotate relative to the handle assembly **12** about the longitudinal axis "L-L". When the switch bar **1270** is moved in the distal direction, the brake tube **1230** is also moved in the distal direction "D-D" because the switch bar **1270** is attached thereto. As the brake tube **1230** moves proximally, the shift pin **1332** is caused to rotate and rotates brake cam **1330** such that it permits the ends **1242** of the brake band **1240** to move inwardly toward each other to thereby permit the grip **1320** to be moved relative to the shroud **1260**. See FIG. **46**. In various embodiments, an articulation pin **166** extends from translation member **138'** through a slot **1265** in the shroud segment **1260***a* and is received in a hole **1324** in the grip segment **1322***a*. See FIGS. **36** and **37**. Thus, when the clinician moves the rotation grip **1322** axially in the proximal direction "PD" and distal direction "DD", the translation member **138'** as well as the articulation link **123** which is attached thereto by an arm **160** also moves. Thus, when the clinician moves the rotation grip **1322** axially in the proximal direction "PD" and distal direction "DD", the translation member **138'** as well as the articulation link **123** also moves in those directions to effectuate articulation of the articulatable disposable loading unit. In addition, as the grip **1322** is axially moved on the shroud **1260**, the indicator pin **1263** makes an audible click or sound as it engages the detents **1328** to provide the clinician with an audible indication of the progress of the articulation motion.

FIG. **46** depicts use of translation member **138** that has an upstanding arm portion **540** and an arm **546** which includes an opening **548** configured to receive a finger (not shown) extending from the proximal end of articulation link **123** (not shown). See FIGS. **4** and **11**. Pin **166** is secured to translation member **138** and dimensioned to extend through the slot **1265** in the shroud and into the hole **1324** in the shroud **1322**. This embodiment otherwise works the same as the embodiments depicted in FIGS. **37** and **38**. Those of ordinary skill in the art will recognize that the aforementioned embodiment represents a vast improvement over prior instruments adapted for use with disposable loading units such as those disclosed in U.S. Pat. No. 5,865,361. In particular, in the embodiments described above, the clinician may rotate the disposable loading unit to the desired position and then lock the shroud **1260** to prevent further rotation of the shroud **1260**. The clinician may then articulate the disposable loading unit while the shroud **1260** remains locked in position. In prior units, the rotation knob was free to rotate while the clinician was trying to articulate the disposable loading unit. Thus, to prevent the disposable loading unit from rotating, the clinician had to manipulate the articulation lever while being careful not to impart a rotation motion to the rotation knob. The above-described embodiments solve that problem.

FIGS. **47-51** illustrate another surgical stapling apparatus **1410** of the present invention constructed for use with a disposable loading unit (not shown) that permits a clinician to articulate and fire the disposable loading unit with one hand. More particularly and with reference to FIG. **47**, the surgical instrument **1410** is substantially similar in construction as the various instruments described above, except for the articulation system **1420** as will be described in detail below. Those components that are the same as the components employed in the above-mentioned embodiments will be labeled with the same numbers and those of ordinary skill in the art can refer to the disclosure set forth hereinabove that explains their construction and operation.

In one embodiment, the surgical stapling apparatus **1410** may include a handle assembly **12** that has an elongated body **14** that is operably coupled to the handle assembly **12** and protrudes distally therefrom. A distal end of the elongated body **14** may be coupled to an articulatable disposable loading unit **16**. The disposable loading unit may include a tool assembly **17** that is selectively articulatable about an articulation axis "AA-"AA" by articulation motions transferred thereto by the elongated body **14** as is known.

The handle assembly **12** may comprise a handle housing **36** and have a movable handle **24** operably coupled thereto that is movable through actuation strokes relative to the handle housing **36**. As in the above-described embodiments, actuation of the movable handle **24** may cause longitudinal actuation motions to be applied to an actuation shaft **46** which is operably coupled to a control rod **52** which comprises a portion of the elongated body **14**. As can be seen in FIGS. **48-51**, the articulation system **1420** may include an articulation trigger **1422** that may be shaped and oriented relative to the stationary portion **22** of the handle housing **36** and the movable handle **24** to enable the clinician to actuate it with his or her index finger of the hand that is grasping the handle assembly **12** and which actuates the movable handle **24**. The trigger **1422** may have a drive bar portion **1424** attached thereto that has a vertical portion **1426** that is pivotally pinned to the handle housing **36** by a pivot pin **1428** such that the articulation trigger **1422** may be selectively pivoted in the "G" and "H" directions about pivot pin **1428**. See FIG. **49**. The drive bar portion **1424** may further have a drive portion **1430** that has a slot **1432** therein adapted to receive a drive pin **1434** attached to an articulation bar **1440**. As can be seen in FIG. **49**, the articulation bar **1440** may be provided with a pair of elongated slots **1442**, **1444** that are adapted to receive portions of screws **1450**, **1452**, respectively. Screws **1450**, **1452** extend through the elongated slots **1442**, **1444**, respectively and are attached to the handle housing segment **36***a* such that the articulation bar **1440** is constrained to move longitudinally within handle housing **36** in the proximal direction "PD" and the distal direction "DD". The distal end of the articulation bar **1440** may have an articulation pin **1446** that is adapted to extend into an annular groove **139"** provided in the proximal end of the translation member **138"** which may be otherwise iden-

tical in construction and operation with respect to translation member **138'** described in detail above. That is, the translation member **138"** may have a plurality of ridges **156** which are configured to be slidably received within grooves formed along the inner walls of the rotatable knob **28"**. Engagement between ridges **156** and those grooves prevent relative rotation of the translation member **138"** and the rotatable knob **28"** while permitting relative linear movement between those components. The distal end of translation member **138"** may include an arm **160** which includes an opening **162** configured to receive a finger **164** extending from the proximal end of articulation link **123**. See FIGS. **48** and **49**. Thus, when the clinician actuates the articulation trigger **1422** in the "G" direction, the drive portion **1430** pulls the articulation bar **1440** in the proximal direction "PD" which also pulls the translation member **138"** and the articulation link **123** attached thereto in the proximal direction "PD" which may thereby cause the disposable loading unit coupled thereto to articulate in the right hand direction in the manner described above and hereinbelow. When the clinician pulls the articulation trigger **1422** in the "H" direction, the drive portion **1430** pushes the articulation bar **1440** in the distal direction "DD" which also pushes the translation member **138"** and the articulation link **123** attached thereto in the distal direction "DD" which may thereby cause the disposable loading unit coupled thereto to articulate in the left hand direction.

As indicated above, this embodiment may include a sensor cylinder **178'** that interfaces with a sensor tube **176** and a sensor link **182** as was described above to detect whether a disposable reload unit has been coupled to the control rod **52** and prevent actuation of the articulation mechanism **1420** when no disposable reload unit has been attached. In this embodiment, however, the flange **190'** of the sensor tube **178'** is configured to interact with a "no reload" lockout ramp **1448** formed on the articulation bar **1440**. See FIGS. **50** and **51**. When no disposable loading unit has been coupled to the elongated member **14** and control rod **52**, the sensor tube **178'** is biased into the position illustrated in FIG. **50**. As can be seen in that Figure, the no reload lockout ramp **1448** on the articulation bar **1440** is engaged with the flange **190'** on the sensor tub **178'** such that the articulation bar **1440** is biased laterally outward in the "I" direction. As can also be seen in that Figure, an inwardly extending locking detent **37** is formed on the handle housing segment **36*a*** and is adapted to be received in a locking notch **1445** in the articulation bar **1440** when the flange **190'** engages the no reload lockout ramp **1448** to bias the articulation bar **1440** in the "I" direction. When the detent **37** is received in the locking notch **1445**, the articulation bar **1440** cannot be actuated. Thus, when no disposable loading unit is coupled to the instrument **1410**, the articulation trigger **1422** cannot be actuated. When a disposable loading unit is coupled to the elongated member **14** and control rod **52** and sensor bar **176**, the sensor cylinder **178'** is biased in the proximal direction "PD" which causes the flange **190'** to disengage the non reload lockout ramp **1448** as shown in FIG. **51** and thereby permit the articulation bar **1440** to move. Thus, the articulation trigger **1422** may be actuated when a disposable loading unit has been coupled to the stapling apparatus **1410**.

Those of ordinary skill in the art will appreciate that the articulation mechanism **1420** described above enable the clinician to operate the instrument with one hand. This represents a vast improvement over those articulation mechanisms disclosed in U.S. Pat. No. 5,865,361 and other prior stapling apparatuses configured for use with disposable loading units.

FIGS. **52-64** disclose another surgical stapling apparatus **1510** of the present invention constructed for use with an articulatable disposable loading unit (not shown) that permits a clinician to articulate and fire the disposable loading unit by manipulating the movable handle **24"**. In one embodiment, the surgical stapling apparatus **1510** may include a handle assembly **12** that has an elongated body **14** that is operably coupled to the handle assembly **12** and protrudes distally therefrom. A distal end of the elongated body **14** may be coupled to an articulatable disposable loading unit **16**. The disposable loading unit may include a tool assembly **17** that is selectively articulatable about an articulation axis "A1-A1" by articulation motions transferred thereto by the elongated body **14** as is known. As will be discussed in detail below, the surgical stapling apparatus **1510** may employ a unique and novel selector arrangement **1512** that interfaces with the movable handle **24"**, the actuation shaft **46** and an articulation system **1520**. When the selector arrangement **1512** is in a "firing" orientation, manipulation of the movable handle member **24"** through actuation strokes imparts a firing motion to the actuation shaft **46** and when the selector arrangement **1512** is in an "articulation" orientation, manipulation of the movable handle **24"** through the actuation strokes actuates the articulation system **1520**. Those components that are the same as the components employed in the above-mentioned embodiments will be labeled with the same numbers and those of ordinary skill in the art can refer to the disclosure set forth hereinabove that explains their construction and operation.

As can be seen in FIGS. **52** and **53**, the selector arrangement **1512** may include an articulation selector switch **1522** that is located outside of the handle housing **36** to provide access thereto. The articulation selector switch **1522** may be coupled to an articulation selector switch shaft **1524** that extends through the handle housing segment **36*b*** and is attached to a rocker mount **1530** which comprises a portion of the articulation system **1520**. A second articulation selector switch shaft **1526** protrudes outward from the other side of the rocker mount **1530** to extend through the handle housing segment **36*a*** for attachment to a selector switch **1522*a*** such that the rocker mount **1530** is pivotable about rocker axis "RA" defined by the shafts **1524**, **1526**. See FIG. **60**. As can be seen in FIGS. **56-58**, the articulation system **1520** further includes a first articulation gear **1540** and a second articulation gear **1550** that are each freely rotatable within the rocker mount **1530**. The first and second articulation gears **1540** and **1550** are oriented for selective engagement with an articulation bar extension **1441'** that comprises a portion of articulation bar **1440'**, which is otherwise similar to articulation bar **1440** described above. As can be seen in FIG. **55**, the articulation bar extension **1441'** has a series of holes **1443'** therein adapted to be engaged by the first and second articulation gears **1540**, **1550**, depending upon the orientation of the rocker mount **1530**.

The selector arrangement **1512** may further include a unique and novel gear selector switch assembly **1560** for interfacing between a firing gear **1610** and an articulation transfer gear train **1600** that comprises a portion of the articulation system. In various embodiments, the articulation transfer gear train **1600** may comprise a first transfer gear **1602** that is mounted to a first transfer gear shaft **1604** that is rotatably supported in sockets (not shown) in the handle housing segments **36*a***, **36*b*** and a second transfer gear **1606** that is mounted on a second transfer gear shaft **1608** that is rotatably supported in sockets (not shown) in the handle housing segments **36*a***, **36*b***. In various embodiments, the gear selector switch assembly **1560** may include a function

selector switch **1562** that has a pair of pins **1563** protruding therefrom that extend through corresponding arcuate slots **1564** in the handle housing segment **36***b* and are attached to a drive disc **1566**. See FIGS. **61** and **62**. As can be seen in those Figures, the drive disc **1566** may have a series of teeth-receiving cavities **1568** therein that are adapted to selectively mesh with corresponding disc teeth **1571** in a shift disc **1570**. The shift disc **1570** may be non-rotatably affixed to a stationary shaft **1574**. As can be seen in FIGS. **61** and **62**, an end **1575** of the stationary shaft **1574** may be received in a cavity **1577** and pinned thereto by a lock pin **1578**. In various embodiments for example, the end **1575** may be molded into the handle housing segment **36***a* such that stationary shaft **1574** is not rotatable relative thereto. As can also be seen in FIG. **62**, the shift disc **1570** may be non-rotatably pinned to stationary shaft **1574** by a shift pin **1580** that extends through a transverse slot **1576** in the stationary shaft **1574** to enable the shift disc **1570** to move axially (and non-rotatably) on the stationary shaft **1574**.

As can also be seen in FIGS. **61** and **62**, the gear selector switch assembly **1560** may further include a drive gear assembly **1590** that comprises a drive gear portion **1592** and an articulation drive gear portion **1594**. The drive gear assembly **1590** is configured to move axially on the stationary shaft **1574** and is biased in the "J" direction by a spring **1596** that is journaled on the stationary shaft **1574**.

The operation of the articulation system **1520** will now be described with reference to FIGS. **57** and **58**. To commence the articulation process, the clinician actuates one of the articulation selector switches **1522***a*, **1522***b*. In one embodiment, for example, if the clinician desires to articulate the disposable loading unit to the right, the clinician pivots the articulation selector switches **1522***a*, **1522***b* downward (arrow ""L" in FIG. **52**). By pivoting the selector switches **1522** downward, the rocker mount **1530** is pivoted in the counterclockwise direction "CCW" in FIG. **58** to bring the second articulation gear **1550** into meshing engagement with the holes **1443'** in the articulation bar extension **1441'**. In the articulation mode, the gear selector switch assembly **1560** is permitted to remain in the unactuated position illustrated in FIGS. **59** and **63**. When in that position, the drive gear assembly **1590** is positioned such that a handle gear **1620** attached to or otherwise molded to the movable handle **24** is in meshing engagement with the drive gear portion **1592** of the drive gear assembly **1590**. In addition, the articulation drive gear portion **1594** of the drive gear assembly **1590** is in meshing engagement with the first transfer gear **1602**. As can be seen in FIG. **59**, when the drive gear assembly **1590** is positioned in that manner, the firing gear **1610**, which is rotatably supported on a firing gear shaft **1612**, is not engaged with the drive gear assembly **1590**. Thus, actuation of the movable handle **24** will not affect the firing gear **1610**.

When the selector switches **1522***a*, **1522***b*, **1562** are positioned in the manner described immediately above, the clinician may articulate the disposable loading unit attached to the stapling apparatus **1510** by actuating (ratcheting or pivoting) the movable handle **24**. As the movable handle **24** is actuated, the handle gear **1620** rotates in the counterclockwise direction "CCW" which, in turn, causes the drive gear **1592** to rotate in the clockwise direction "CW" which, in turn, causes the first transfer gear **1602** to rotate in the counterclockwise direction "CCW" which, in turn, causes the second transfer gear **1606** to rotate in the clockwise direction "CW" which, in turn, causes the first articulation gear **1540** to rotate in the counterclockwise direction "CCW" which, in turn, causes the second articulation gear **1550** to rotate in the clockwise direction "CW" which, in turn, drives the articulation bar extension **1441'** in the proximal direction "PD". See FIG. **58**. As the articulation bar extension **1441'** is driven in the proximal direction "PD", the articulation bar **1440'** drives the translation member **138"** and the articulation link **123** attached thereto is drawn in the proximal direction "PD" which may thereby cause the disposable loading unit coupled thereto to articulate in the right hand direction in the manner described above and hereinbelow. To articulate the disposable loading unit to the left, the clinician pivots the articulation selector switches **1522***a*, **1522***b* in the up direction (the "M" direction in FIG. **52**). When the selector switches **1522***a*, **1522***b* are pivoted in that direction, the articulation rack **1530** is pivoted in the clockwise direction "CW" about the rack axis "RA" to thereby bring the first articulation gear **1540** into meshing engagement with the articulation bar extension **1441'**. Because the first articulation gear **1540** is rotating in the clockwise direction "CW", the first articulation gear **1540** drives the articulation bar extension **1441'** in the distal direction "DD" as the movable handle is actuated. As the articulation bar extension **1441'** is driven in the distal direction "DD", the articulation bar **1440'** drives the translation member **138"** and the articulation link **123** attached thereto in the distal direction "DD" which may thereby cause the disposable loading unit coupled thereto to articulate in the left hand direction. Also in this embodiment, the articulation bar **1440'** may employ the locking arrangement described above with respect to articulation bar **1440** for preventing movement of articulation bar **1440'** when no disposable loading unit has been coupled to the stapling apparatus **1510**. Thus, in this embodiment, the articulation motions are generated by actuating the movable handle **24**.

This embodiment may also employ a unique and novel firing system generally designated as **1601**, of which firing gear **1610** is a part. More particularly and with reference to FIGS. **55-60**, the firing assembly **1601** may also include a pawl slide **1640** that is movably supported in a right hand rack guide **1630***a* formed in the right hand housing segment **36***a* and a left hand rack guide **1630***b* formed in the left hand housing segment **36***b* as shown in FIG. **54** (the housing segments **36***a*, **36***b* have been omitted for clarity in FIG. **54**). In various embodiments, the pawl slide **1640** may generally have the shape of a capital "I" with a distal cross bar portion **1642**, central bar portion **1644** and a proximal cross bar portion **1646**. The cross bar portions **1642**, **1646** serve to slidingly support the pawl slide **1640** in the rack guides **1630***a*, **1630***b* such that the pawl slide **1640** is able to axially move in the proximal direction "PD" and the distal direction "DD". Also in this embodiment, a drive rack **1650** may be formed on the bottom of, or otherwise attached to, the bottom of the central bar portion **1644** of the pawl slide **1640**. The firing rack **1650** is oriented in meshing engagement with the firing gear **1610** as will be discussed in further detail below. Also attached to the central bar portion **1644** is a pawl **42** that has a rack engagement portion **43** for driving engagement of the rack **48** on the actuation shaft **46**. As shown in FIGS. **55** and **64**, the pawl **42** in various embodiments may be stamped out of metal and formed in a substantially U-shape such that the pawl **42** may be pivotally pinned to the central bar portion **1644** by a pivot pin **44'**. A pawl spring **50'** may be supported in a hole **1645** in the central bar portion **1644** to bias the pawl **42** into meshing engagement with the rack **48** on the actuation shaft **46**. See FIG. **64**.

The operation of the firing system **1601** will now be described with reference to FIGS. **60** and **64**. To commence the firing process, the clinician turns the gear selector switch

assembly **1560** to the position depicted in FIG. **64**, such that the drive gear assembly **1590** is biased in the "K" direction such that the handle gear **1620** remains in meshing engagement with the drive gear **1592** and the articulation gear **1594** of the drive gear assembly **1590** does not mesh with the first articulation transfer gear **1602**. In addition, the drive gear **1592** is in meshing engagement with the firing gear **1610** which, as described above, is in meshing engagement with the firing rack **1650**. Because the articulation drive gear **1594** does not mesh with the first articulation transfer gear **1602**, actuation of the movable handle **24"** will not result in the generation of any articulation motions.

When selector switch **1562** is positioned in the manner described immediately above, the clinician may fire the actuation shaft **46** which, in turn, transfers firing motions to the control rod **52** coupled to the actuation shaft **46** which, in turn, transfers firing motions to the disposable loading unit coupled thereto in the manner described in U.S. Pat. No. 5,865,361. As illustrated in FIG. **56**, the actuation shaft **46** of this unique and novel embodiment is fired (or moved in the distal direction "DD") by actuating (ratcheting or pivoting) the movable handle **24**. As the movable handle **24"** is actuated, the handle gear **1620** rotates in the counterclockwise direction "CCW" which, in turn, causes the drive gear **1592** to rotate in the clockwise direction "CW" which, in turn, causes the firing gear **1610** to rotate in the counterclockwise direction "CCW" and drive the firing rack **1650** and pawl **42** attached thereto in the distal direction "DD". The rack engagement portion **43** of the pawl **42** is in engagement with the teeth **49** of the rack **48** on the actuation shaft **46** and thereby drives the actuation shaft **46** in the distal direction "DD". This embodiment otherwise operates as described above. In particular, the clinician continues to ratchet the movable handle **24"** until the firing sequence has been completed. When the movable handle **24"** is pivoted to a position adjacent the stationary handle portion **22**, the clinician releases the movable handle **24"** and the movable handle **24"** is pivoted to the starting position by the spring **40** (described above) and then the movable handle **24"** can be pivoted again for another stroke to advance the pawl **42** and the actuation shaft **46**. When the movable handle **24"** is released, the rack engagement tooth **43** of the pawl **42** slides over the teeth **49** on the actuation shaft rack **48** as the pawl moves in the proximal direction "PD" and then reengages the teeth **49** when the movable handle **12** is pivoted to drive the actuation shaft in the distal direction "DD".

Those of ordinary skill in the art will understand that the stapling apparatus **1510** is equipped with a movable handle **12** that can be used to fire the instrument as well as to articulate the disposable loading unit attached thereto. It will be further appreciated that such embodiments are able to generate higher articulation forces than another prior devices such as those disclosed in U.S. Pat. No. 5,865,361.

FIGS. **65-69** illustrate an alternative articulation mechanism **1720** for axially advancing the translation member **138** to ultimately result in the longitudinal actuation of an articulation link (not shown in FIG. **65**). As can be seen in FIGS. **65** and **66**, the articulation mechanism **1720** may be used in connection with a rotation knob **28'** which may be substantially identical to rotation knob **28** described above, except that rotation knob **28'** is configured to support a articulation knob **1730** as shown. As can be seen in FIG. **66**, the articulation knob **1730** may include a thumb tab **1732** that is attached to a pivot shaft **1734** that extends through a hole **1736** in the rotation knob segment **28*a*'**. The pivot shaft **1734** may have a squared portion **1735** that is adapted to be non-rotatably received in a corresponding square hole **1752** in a cam disc **1750**. The translation member **138** may have an upstanding arm portion **540** that has a notch **542** therein that is sized to receive a tab (not shown) formed on the sensor cylinder (not shown) as was described above. The distal end of translation member **138** may include an arm **546** which includes an opening **548** configured to receive a finger **164** (not shown in FIGS. **65** and **66**) extending from the proximal end of articulation link **123** (not shown in FIGS. **65** and **66**) as was described above. See FIGS. **4** and **11**. A pin **166** that may be constructed from a non-abrasive material, e.g., Teflon® or metal that has been coated with Teflon®, is secured to translation member **138** and dimensioned to be received within an arcuate-shaped cam slot **1754**. Thus, as the actuation knob **1730** is rotated, the pin **166** is driven longitudinally either in the proximal direction "PD" or the distal direction "DD", depending upon the direction in which the actuation knob **1730** is rotated. The longitudinal displacement of the pin **166** is illustrated in the series of FIGS. **67-69**. For example, FIG. **67** illustrates the position of the cam disc **1750** and pin **166** when the disposable loading unit has been articulated to the left. FIG. **68** illustrates the position of the cam disc **17650** and articulation pin **166** when the disposable loading unit has not been articulated (e.g., is axially aligned with the elongated body) and FIG. **69** illustrates the position of the cam disc **1750** and articulation pin **166** when the disposable loading unit has been articulated to the right. In some embodiments, the arcuate cam slot **1754** may be shaped such that the ramp angle thereof relative to pin **166** throughout the entire actuation sequence is relatively low (under 15 degrees) which may result in an effective articulation lock.

FIGS. **70** and **71** illustrate another unique and novel articulation mechanism **1820** and unique and novel lockable rotation system **1850** that may be used in connection with a stapling apparatus **1810** that may employ a disposable loading unit. The articulation mechanism **1820** is constructed to axially advance the translation member **138** to ultimately result in the longitudinal actuation of an articulation link **123** (not shown in FIGS. **70** and **71**) that is coupled to the translation member **138**. As can be seen in FIGS. **70** and **71**, the articulation mechanism **1820** may be used in connection with a handle housing **36"** that is formed from handle segments (handle segment **36*a*"** is shown in FIGS. **70** and **71** with it being understood that another handle segment shaped to mate with handle segment **36*a*"** is employed to form handle housing **36"**). In various embodiments, the articulation mechanism **1820** is mounted to a rotatable shroud **1830** that has a flanged proximal end **1832** that is adapted to be received in an annular groove **1834** formed in the handle housing **36"** such that the rotatable shroud **1830** may be selectively rotated about axis "L-L" relative to handle housing **36"** as will be discussed in further detail below. Although not shown in FIGS. **70** and **71**, the elongated member **14** and casing **124** described above in connection with other embodiments may be attached to the rotatable shroud **1830** by radial projections **132** formed on the distal end of rotatable shroud **1830**. See FIG. **70**. Projections **132** and openings **128** in casing **124** fixedly secure rotatable shroud **1830** and elongated body **14** in relation to each other, both longitudinally and rotatably. Rotation of rotatable shroud **1830** with respect to handle housing **36"** thus results in corresponding rotation of elongated body **14** with respect to handle housing **36"**.

As can be seen in FIGS. **70** and **71**, the articulation mechanism **1820** may comprise an articulation ring **1822** that is threadedly attached to a series a of threads **1836** provided on the rotatable shroud **1830**. The translation

member **138** may have an upstanding arm portion **540** that has a notch **542** therein that is sized to receive a tab (not shown) formed on the sensor cylinder (not shown) as was described above. The distal end of translation member **138** may include an arm **546** which includes an opening **548** configured to receive a finger **164** (not shown in FIGS. **70** and **71**) extending from the proximal end of articulation link **123** (not shown in FIGS. **70** and **71**) as was described above. See FIGS. **4** and **11**. A pin **166** that may be constructed from a non-abrasive material, e.g., Teflon® or metal that has been coated with Teflon®, is secured to translation member **138** and dimensioned to be received within an annular slot **1825** formed in the articulation ring **1822**. Thus, as the articulation ring **1822** is threadedly advanced on the rotatable shroud **1830** in the proximal direction "PD", the pin **166** also drives the translation member **138** (and the articulation link **123**) in the proximal direction "PD" to cause the disposable loading unit to articulate in the right hand direction. Likewise, as the articulation ring **1822** is threadedly advanced on the rotatable shroud **1830** in the distal direction "DD", the pin **166** also drives the translation member **138** (and the articulation link **123**) in the distal direction "DD" to cause the disposable loading unit to articulate in the left hand direction.

The embodiment depicted in FIGS. **70** and **71** also has a unique and novel lockable rotation system **1850** which may include a lockable knob **1852** that consists of two knob segments **1852***a* that are coupled together by screws, glue, snap features, posts, etc. over the distal end of the handle housing **36"** such that the lockable knob **1852** is rotatably and axially supported on the distal end of the handle assembly **36"**. As can also be seen in FIGS. **70** and **71**, the distal end of the handle housing **36"** has a first lock flange **1860** with a first set of radial gear teeth **1862** formed thereon. The lockable knob **1852** may also have an inwardly extending second lock flange **1854** that has a second set of radial gear teeth **1856** formed thereon. The second set of radial gear teeth **1856** are located in confronting relationship with the first set of radial gear teeth **1862** on the first lock flange **1860** such that the second radial gear teeth **1856** may selectively mesh with the first radial gear teeth **1862**. A lock spring **1870** may be used to bias the lock knob **1852** in the distal direction "DD" to bring the second set of radial gear teeth **1856** into meshing engagement with the first set of radial gear teeth **1862**. As can also be seen in FIGS. **70** and **71**, the proximal end **1831** of the rotatable shroud **1830** has a rotation spline **1837** formed thereon configured to mesh with an inwardly extending toothed flange **1858** formed on the distal end of the lockable knob **1852**. Those of ordinary skill in the art will understand that the rotation spline **1837** and toothed flange **1858** serve to rotatably affix the lockable knob **1852** to the rotatable shroud **1830** while enabling the lockable knob **1852** to move axially relative to the rotatable shroud **1830**. Thus, to rotate the rotatable shroud **1830** (and the elongate body **14** and disposable loading unit affixed thereto), the clinician biases the lockable knob **1852** in the proximal direction "PD" to disengage the second set of radial gear teeth **1856** from the first set of radial gear teeth **1862** which thereby permits the lockable knob **1852** to rotate about longitudinal axis "L-L" relative to handle housing **36"**. As the lockable knob **1852** is rotated, the rotatable shroud **1830** also rotates with the lockable knob **1852** by virtue of the engagement between the toothed flange **1858** and the rotation spline **1837**. After the clinician has rotated the rotatable shroud **1830** to the desired position, he or she then releases the lockable knob **1852**. When the lockable knob **1852** is released, the spring **1870** biases the second set of radial gear teeth **1856** into meshing engagement with the first set of radial gear teeth **1862** to retain the rotatable shroud **1830** in that position. Thus, such unique and novel arrangements solve the problems associated with rotatable knobs and articulation mechanisms employed in prior surgical instruments that are used in connection with disposable loading units. In particular, after the disposable loading unit and elongated body has been inserted into the patient, the clinician may rotate the disposable loading unit about the longitudinal axis "L-L" relative to the handle assembly **12"** to a desired orientation and then lock it in that position. Thereafter, the clinician may then articulate the disposable loading unit to the left side or right side of the longitudinal axis. In the embodiments described immediately above, the threaded engagement between the articulation ring and the rotatable knob serves to lock the disposable loading unit in the desired articulated position. As in indicated above, in prior surgical instruments that employ a rotatable knob that has an articulation knob affixed thereto, the rotation knob may move as the clinician actuates the articulation lever making it difficult to accurately position the disposable loading unit.

FIGS. **72** and **73** illustrate another unique and novel articulation mechanism **1920** mounted within a rotatable knob **28"** of the type of construction and operation described hereinabove. In this embodiment, the articulation mechanism **1920** may comprise an outer articulation ring **1922** that has a thrust flange **1924** formed thereon configured to be received in an annular groove **1930** formed in the rotatable knob **28"** for rotatably supporting the outer articulation ring **1922** in the rotatable knob **28"** such that the outer articulation ring **1922** is free to rotate relative to the rotatable knob **28"**, but it cannot move axially relative thereto. In various embodiments, the proximal end **1923** of the outer articulation ring **1922** may have radial gear teeth **1926** formed thereon for meshing engagement with a spur gear **1940** that is attached to an articulation knob **1942**. As can be seen in FIG. **73**, the articulation knob **1942** has a shaft **1944** attached thereto that is rotatably received in a through hole **1943** in the rotatable knob **28"** and is non-rotatably attached to the spur gear **1940** such that rotation of the articulation knob **1942** causes the spur gear **1940** to rotate. As the spur gear **1940** is rotated, the outer articulation ring **1922** is also rotated about the longitudinal axis "L-L". Those of ordinary skill in the art will understand that the outer articulation ring **1922** may be selectively rotated in the clockwise "CCW" or counterclockwise "CCW" directions about the longitudinal axis L-L, depending upon the direction of rotation of the articulation knob **1942**.

As can also be seen in FIG. **72**, the outer articulation ring **1922** has an internal thread **1928** formed therein for threaded engagement with an inner articulation ring **1950**. In this embodiment, the translation member comprises a metal link **1960** that is attached or pinned to the inner articulation ring **1950** by a pin **1952** or other fastener arrangements. The metal link **1960** is constrained to only move axially in the proximal direction "PD" and "distal direction "DD" because it is received within an axial groove **1962** formed in the rotatable knob **28"**. The distal end of the metal link **1960** includes an opening **1964** configured to receive a finger **164** extending from the proximal end of articulation link **123**. Thus, rotation of articulation knob **1942** will result in the axial movement of the articulation link **123** in the proximal direction "PD" or distal direction "DD" depending upon the direction of rotation of the articulation knob **1942**. When the articulation link **123** is advanced in the distal direction "DD", it will result in the disposable loading unit being articulated to left and when the articulation link is pulled in

the proximal direction "PD", it will result in the disposable loading unit being articulated to the right as was discussed above. Those of ordinary skill in the art will appreciate that the threaded engagement between the inner articulation ring **1950** and the outer articulation ring **1922** will serve to retain the articulation link (and, ultimately the disposable loading unit) in the desired articulated position until the articulation knob is again rotated. It will be further appreciated that the desired knob rotation can be set by the gear ratio and thread pitch.

FIGS. **74** and **75** depict an another alternative articulation mechanism **1920'** that employs an inner articulation ring **1922'** that is identical to articulation ring **1922** described above, except that articulation ring **1922'** has a cam slot **1970** therein instead of the inner threads **1928**. As can be seen in FIGS. **74** and **75**, the metal link **1960** has an articulation pin **1966** attached thereto that rides in the cam slot **1970** in the inner articulation ring **1922'**. Thus, as the inner articulation ring **1922'** is rotated by means of the articulation knob **1942** as was described above, the cam slot **1970** and articulation pin **1966** received therein drives the metal link **1960** in the proximal direction "PD" and the distal direction "DD" which results in the axial movement of the articulation link **123** in those directions as was described above.

When using prior surgical stapling devices that are adapted for use with disposable loading units, often times the control rod gets inadvertently advanced out of the end of the casing of the elongated body prior to attachment of the disposable reload unit. When that happens, and the disposable reload unit is attached to the apparatus, the reload unit cannot be fired. Instead, the clinician must first retract the control rod before attaching the reload unit. This occurrence can engender confusion and results in unnecessary downtime during the operation. In addition, during the firing sequence, the firing bar may become jammed requiring the clinician to retract the firing bar which can be difficult at times depending upon the nature of the jam. The embodiment of the surgical stapling apparatus **2010** of the present invention addresses such problems.

More particularly and with reference to FIG. **76**, the surgical stapling apparatus **2010** may be substantially similar in construction as the various instruments described above, except for the unique and novel retraction system **2020** as will be described in detail below. Those components that are the same as the components employed in the above-mentioned embodiments will be labeled with the same element numbers and those of ordinary skill in the art can refer to the disclosure set forth hereinabove that explains their construction and operation.

In one embodiment, the surgical stapling apparatus **2010** may include a handle assembly **2012** that has an elongated body **14** that is operably coupled to the handle assembly **2012** and protrudes distally therefrom. A distal end of the elongated body **14** may be coupled to an articulatable disposable loading unit **16** (or a non-articulatable disposable loading unit). The disposable loading unit **16** may include a tool assembly **17** that is selectively articulatable about an articulation axis "A1-"A1" by articulation motions transferred thereto by the elongated body **14** as is known. See FIG. **76**. In various embodiments, the proximal end of the elongated body **14** is coupled to a rotatable knob **28** that is coupled to handle housing **2036**. As can be seen in FIGS. **76** and **77**, the handle housing **2036** may be formed from a right housing segment **2036***a* and a left housing segment **2036***b* that are attached together.

As shown in FIGS. **76-78**, the right hand housing segment **2036***a* may have a removable cover **2040** that is coupled to the right housing segment **2036***a* by snaps, screws, pin inserts or a releasable detent post inserted into a boss. As will be discussed in further detail below, this embodiment also employs a release plate **64** (FIG. **81**) of the type and construction described above which has a coupling rod **60** attached thereto. The coupling rod **60** extends through an elongated retract slot **34***b* in the left housing segment **2036***b* (FIG. **76**) as well as through an elongated retract slot **34***a* in the removable cover **2040** (FIG. **77**) to have retractor knobs **32***a*, **32***b* attached thereto as was described above. The right housing segment **2036***a* further has a retract slot **34***a***'** formed therein that corresponds with the retract slot **34***a* in the removable cover **2040** when the removable cover **2040** is attached thereto by snap features, adhesive, screws, etc. In this embodiment, the right housing segment **2036***a* may have a pair of spaced elongated guide ribs **2050** formed therein that serve to define an elongated retract passage **2052** therebetween. Also in various embodiments, a retract slide member **2060** may be received on the coupling rod **60** and be constrained to axially move in the distal direction "DD" and proximal direction "PD" within the elongated retract passage **2052**. The retraction system **2020** may further include a cable slide **2070** that is also constrained to move longitudinally within the retract passage **2052** as can be seen in FIGS. **79** and **84-86**. The proximal end **2072** of the cable slide **2070** may have a notch **2074** therein to enable a proximal end **2082** of a retract cable **2080** to be pinned or otherwise attached thereto. A distal end **2084** of the retract cable **2080** may be attached to a proximal end **2092** of a retraction spring **2090**. The distal end **2094** of the retraction spring **2090** may be attached to a retraction spring post **2096** formed on the right housing segment **2036***a*. See FIGS. **78** and **83-85**. The retraction cable **2080** may be journaled on a retract pulley **2100** that is rotatably supported on a pulley post **2102** formed on the right housing segment **2036***a*.

In various embodiments, the retraction system **2020** may be configured to enable the control rod **52** to be automatically retracted at the end of the firing sequence or, if desired, manually retracted. For example, as can be seen in FIG. **83**, a cocking lug **2110** may have a hollow cavity **2111** therein and be attached to the cable slide **2070** by a clevis-like lug mount **2112** and pin **2114** that is received within the hollow cavity **2111**. As can be seen in FIG. **83**, the cocking lug **2110** may further have an inner end portion **2116** that is arranged to be adjacent to the removable cover **2040** and also have a relieved area or notch **2118** formed therein. A lug spring **2120** configured as shown in FIGS. **78** and **83**, may be journaled on the pin **2114** to bias the cocking lug **2110** about the pin **2114** in the counterclockwise "CCW" direction as shown in FIG. **83**. The refraction system **2020** may further include a retraction lock assembly **2130**.

The retraction lock assembly **2130** may include a lock member **2132** that is pivotally pinned to the removable cover **2040** by a lock pin **2134**. A lock spring **2140** configured as shown in FIGS. **82** and **83**, may be journaled on the lock pin **2134** and attached to the cover **2040** by a screw **2142** or other suitable fastener such that the lock spring **2140** is biased in the counterclockwise "CCW" direction in FIG. **83**. As can further be seen in FIG. **83**, the lock member **2132** is configured to protrude through a window **2044** in the cover **2040** and has a notched proximal end **2136** adapted to engage a notch **2046** in the cover **2040**. See FIG. **83**. The lock member **2132** may have a distal end **2138** that is adapted to retainingly engage a notch **2076** in the proximal end **2072** of the cable slide **2070**.

Operation of the surgical stapling apparatus **2010** will now be described with reference to FIGS. **84-88**. FIG. **84**

illustrates the surgical stapling apparatus **2010** in an initial "pre-fired" position wherein the retract knob **32***a* and the cocking knob **2110** (FIG. **80**) are in the "pre-fired" position located at the proximal end of the handle housing **2036**. Prior to commencing the firing sequence, the clinician may push the cocking lug **2110** in the distal direction "DD" to the cocked position shown in FIG. **85**. As can be seen in that Figure, when the cocking lug **2110** is in the cocked position, the retraction spring **2090** is stretched and serves to store retraction energy therein. After the cocking lug **2110** has been moved to the cocked position, the clinician may press the firing button **82** (as was discussed above) and then commence the firing sequence by ratcheting the movable handle **24**. As the clinician advances the actuation shaft **46** in the distal direction "DD" by ratcheting the movable handle **24**, the retract knobs **32***a*, **32***b* move distally with the actuation shaft **46** until they reach the position shown in FIG. **86** which is prior to the end of the firing stroke (i.e., the control rod **52** has been advanced as far as it can go in the distal direction to cause the disposable reload unit to be completed fired). If the clinician wishes to manually retract the control rod **52** prior to reaching the final firing stroke (at any time during the firing sequence), the clinician simply biases the cocking lug **2110** in the clockwise "CW" direction shown in FIG. **87** which causes the cocking lug **2110** to bias the lock member **2132** in the clockwise direction "CW" to thereby cause the distal end **2138** to move out of the locking notch **2076** in the cable slide **2070** to thereby permit the cable slide **2070** to move in the proximal direction "PD" under the force of the retraction spring **2090** and thereby force the retract slide **2060** in the proximal direction "PD". Because the retract bar **60** extend through the retract slide **2060** and is attached to the retraction plate **64**, the retract bar **60** causes the retract plate **64** to retract the actuation shaft **46** (and the control rod **52**) by virtue of its attachment to the actuation shaft **46**.

If the clinician does not wish to manually actuate the retraction system **2020**, the clinician may keep ratcheting the movable handle **24** until the firing sequence is completed. When the actuation shaft **46** has been distally advanced to its distal most position at the completion of the firing sequence, (FIG. **88**) the retract slide **2060** biases the lock member **2132** to the position shown in FIG. **88** such that the distal end **2138** is moved out of retaining engagement with the notch **2076** in the cable slide **2070** which permits the cable slide **2070** to move to the proximal most retracted position under the force of the retraction spring **2090**. Thus, when the retract knob **32***a* reaches the fully fired position, it causes the retract system **2020** to automatically retract the actuation shaft **46** and control rod **52**.

Those of ordinary skill in the art will readily appreciate that these embodiments serve to avoid the problem of the control rod **52** not being fully retracted to a position wherein another disposable reload unit may be attached to the stapling apparatus. In addition, the retraction spring serves to assist the clinician in retracting the control rod, should it be necessary to do so during the firing sequence.

FIG. **89** illustrates an alternative disposable loading unit **2216** that has an elongated housing portion **250'** that may include an upper housing half (not shown) and a lower housing half **252'**. The distal end of the housing **250'** is attached to a tool assembly **17** (FIG. **76**) and removably attachable to the elongated body **14**. Housing halves define a channel **253'** for slidably receiving axial drive assembly **212** therein. As will be discussed further below, the drive assembly **212** includes an elongated drive beam **266** including a distal working head **268** and a proximal engagement section **270**. Drive beam **266** may be constructed from a single sheet of material or, preferably, from multiple stacked sheets. Engagement section **270** may include a pair of engagement fingers **270***a* and **270***b* which may be dimensioned and configured to mountingly engage a pair of corresponding retention slots **272***a* formed in drive member **272**. Drive member **272** may include a proximal porthole **274** configured to receive the distal end of control rod **52** when the proximal end of disposable loading unit **2216** is engaged with elongated body **14** of surgical stapling apparatus **10**. In this embodiment, at least one, and preferably a pair of, energy storing members **2220** are also supported in the housing **250'** as shown. Energy storing members **2220** may comprise compression springs **2222**. As control rod **52** is axially advanced in the distal direction "DD", the drive member **272** and drive beam **266** are driven in that direction compressing the springs **2222** (i.e., storing retraction energy therein). After the firing sequence has been completed or, if during the firing sequence it becomes necessary to retract the drive beam **266**, the compressed springs **2222** will release the stored retraction energy and serve to assist in the retraction processes by releasing their stored energy to bias the drive beam **266** and drive member **272** in the proximal direction "PD".

Prior instruments, such as those disclosed in U.S. Pat. No. 5,865,361 suffer from the inability to be fired in thicker tissues (e.g., tissues with thicknesses greater than 3.5 mm) due to the increased loads applied to the firing system. Such increased loads can, for example, increase the likelihood that the firing system will fail when the knife is still in the anvil and may therefore require that the end effector be cut off of the tissue. Such failure mode can have serious patient injury consequences. Various embodiments of the present invention are directed to improved actuation transfer mechanisms or assemblies that are constructed to act as a fail safe "fuse" or device that would prevent advancement of the actuation shaft **46** (e.g., prevent transfer of actuation motions to the disposable loading unit) when the firing load resulting from thick tissue exceeds a predetermined magnitude.

FIG. **90** illustrates one actuation transfer assembly **100** that includes a driving pawl **42'** that has a pawl body portion **102** that has rack engagement member or tooth **43** that is attached to or formed on the pawl body portion **102** at an attachment area generally designated as **104**. In the embodiment depicted in FIG. **90**, an undercut or weakened area **45** is formed along at least a portion of the attachment area **104**. The characteristics of the undercut or weakened area **45** may be sized such that the tooth **43** will shear off of the driving pawl **42'** or otherwise assume a non-driving position when the firing load attains a predetermined maximum value to thereby prevent advancement of the actuation shaft **46**—even though the manually actuatable handle member **24** continues to be actuated. In various embodiments, the predetermined maximum value may be selected so that the tooth **43** shears off or otherwise assumes a non-driving position before any other components would fail or otherwise become inoperable due to the resistance experienced by the drive beam due to jamming or other restriction.

Another pawl arrangement is depicted in FIG. **91**. As can be seen in that Figure, the pawl **42"** has a pawl body **106** a width "W" and the engagement tooth **43** has a width "W'" that is less than "W", such that the engagement tooth **43** will shear or otherwise fail when the firing load exceeds a predetermined magnitude to prevent the actuation shaft **46** from being further advanced—even though the manually actuatable handle member **24** continues to be actuated. In various embodiments, the pawls **42'**, **42"** may be fabricated

(molded, machined, etc.) from a single material. In other embodiments, the engagement tooth **43** may be formed separately from the pawl body **106** and may be attached thereto by a shear pin (not shown) or other means such as adhesive to support the engagement tooth **43** in a position for driving engagement with the actuation shaft **46** under normal loads, yet shear off to permit the tooth **43** to pivot to a non-engaged position when the firing load exceeds a predetermined magnitude.

FIG. **92** illustrates another actuation transfer assembly **100'** that includes an actuation shaft **46'** that is designed to fail when the firing load exceeds a predetermined magnitude. In this embodiment, an undercut area **108** is provided between adjacent teeth **49** and is sized to form a shear area length "SL" that will facilitate in the shearing of the tooth **49** or otherwise permit the tooth **49** to drivingly disengage from the tooth **43** or permit the tooth **43** on the pawl **42** to slip over the tooth **49** on the rack **48'** when the firing load attains or exceeds the predetermined magnitude described above. In an alternative embodiment illustrated in FIG. **93**, the actuation bar **46"** has a width "WB" and each tooth **49** has a width "WT" that may be less than the width "WB". The width "WT" may be sized to enable the teeth **49** to shear off of the actuation shaft **46"** or otherwise fail or drivingly disengage from the tooth **43** on the pawl **42** when the firing load attains or exceeds a predetermined magnitude as was discussed above. Further, the transfer assembly may be sized to buckle or flex under appropriate load so as to disengage the teeth from the pawl at a predetermined load. The teeth on the pawl and the rack in various embodiments may be designed at a very wide range of minimum failure loads depending upon the degree of safety desired. Such minimum failure loads may be attained by altering the geometry, design and/or materials from which the teeth, adhesive, shear pins, etc. are made.

Those of ordinary skill in the art will appreciate that the foregoing described actuation transfer assembly arrangements of the present invention represent vast improvements over prior surgical instruments that are adapted to actuate disposable reload units. In particular, such actuation transfer assemblies of the present invention will prevent the clinician from advancing the cutting and stapling components in the reload unit when the reload unit has encountered firing forces that might lead to the jamming and/or failure of the cutting and stapling components to advance completely through the tissue clamped in the unit. In prior units, the clinician might be unaware that the thickness of the tissue clamped in the unit was too great to complete the procedure and unwittingly continue to advance the cutting and stapling components in the unit by actuating the handle until the handle assembly exploded or otherwise failed destroying the ability to retract the knife. If the components become jammed, the clinician may be unable to retract the components and therefor have to cut the unit from the tissue. The various arrangements of the present invention described above, address such problems.

These unique and novel features may also be effectively employed with other surgical cutting and stapling apparatuses that use a driving pawl arrangement. For example, FIGS. **93**A and **93**B illustrate the use of a two part pawl arrangement **2000** that can be effectively employed with the surgical instruments disclosed in U.S. patent application Ser. No. 11/821,277, filed Jun. 22, 2007, entitled SURGICAL STAPLING INSTRUMENTS, now U.S. Pat. No. 7,753,245, the disclosure of which is herein incorporated by reference in its entirety. In particular, the two part pawl assembly **2000** may comprise a pawl body **2010** that may be configured and otherwise operated as described in the aforementioned patent application except that, in this embodiment, the tooth portion **2020** is pivotally or otherwise movably coupled to the pawl body **2010**. The tooth portion **2020** may be normally supported in a driving orientation (FIG. **93**A) by a shear pin **2030** or other suitable arrangement such as adhesive, etc. that is selected to shear or otherwise fail when the firing member **2040** thereof encounters a predetermined amount of firing load or resistance during firing. FIG. **93**A illustrates the tooth **2020** in driving engagement with the firing member **2040**. FIG. **93**B illustrates the position after the firing member **2040** has encountered a resistance that exceeds the predetermined firing load which thereby caused the shear pin **2030** to shear off permitting the tooth **2020** to pivot to a non-engaged position. Thus, when in the non-engaged position, the firing member **2040** cannot be advanced distally even though the firing trigger continues to be actuated.

FIGS. **94-97** illustrate a unique and novel articulatable disposable reload unit **3016** that may be employed with the surgical stapling apparatus **10** or any of the other various surgical stapling apparatuses described herein above. Referring to FIG. **96**, the disposable loading unit **3016** may include a tool assembly **17** that has an anvil assembly **20** and cartridge assembly **18**. Anvil assembly **20** may include anvil portion **204** that may have a plurality of staple deforming concavities (not shown) formed in the undersurface thereof. A cover plate **208** may be secured to a top surface of anvil portion **204** to define a cavity therebetween. The cavity may be dimensioned to receive a distal end of an axial drive assembly **212**. A longitudinal slot **214** extends through anvil portion **204** to facilitate passage of retention flange **284** of axial drive assembly **212** into the anvil cavity. A camming surface **209** formed on anvil portion **204** may be positioned to engage axial drive assembly **212** to facilitate clamping of tissue between the anvil assembly **20** and the cartridge **18**. A pair of pivot members **211** formed on anvil portion **204** may be positioned within slots **213** formed in carrier **216** to guide the anvil portion **204** between the open and clamped positions.

In various embodiments, cartridge assembly **18** may include a carrier **216** which defines an elongated support channel **218**. See FIG. **96**. Elongated support channel **218** may be dimensioned and configured to receive a staple cartridge **220**. Corresponding tabs **222** and slots **224** formed along staple cartridge **220** and elongated support channel **218** may function to retain staple cartridge **220** within support channel **218**. A pair of support struts **223** may be formed on staple cartridge **220** such that they are positioned to rest on side walls of carrier **216** to further stabilize staple cartridge **220** within support channel **218**.

Staple cartridge **220** may include retention slots **225** for receiving a plurality of fasteners and pushers as is known. A plurality of spaced apart longitudinal slots **230** extend through staple cartridge **220** to accommodate upstanding cam wedges **232** of an actuation sled **234**. A central longitudinal slot **282** extends along the length of staple cartridge **220** to facilitate passage of a knife blade **280**. During operation of surgical stapler **10**, actuation sled **234** translates through longitudinal slots **230** of staple cartridge **220** to advance cam wedges **232** into sequential contact with pushers operably supported in the slots **225**, to cause pushers (not shown) to translate vertically within slots **225** and urge the fasteners associated with the pushers (not shown) from slots **225** into the staple deforming cavities of the anvil assembly **20**.

Various embodiments may include a mounting assembly **202** that may comprise upper and lower mounting portions **236** and **238**. In one embodiment, the upper mounting portion **236** may be provided with a pair of trunnions **237** that are adapted to be pivotally received within holes **219** in the side walls of the carrier **216**. A pair of anti-buckling springs **241** may be supported in corresponding cavities formed in the mounting assembly **202** to provide support to the laminated knife assembly within the mounting assembly **202**. A proximal portion of mounting assembly **202** may be non-rotatably mounted in a distal body adapter **243** as shown in FIG. **96**.

Housing portion **200** of disposable loading unit **3016** may include an upper housing half **250** and a lower housing half **252**. The proximal end of housing half **250** may include engagement nubs **254** for releasably engaging elongated body **14** (FIG. **94**) and an insertion tip **193**. Nubs **254** form a bayonet type coupling with the distal end of body **14** as described in U.S. Pat. No. 5,865,361.

As can also be seen in FIG. **96**, axial drive assembly **212** may include an elongated drive beam **266** including a distal working head **268** and a proximal engagement section **270**. Drive beam **266** may be constructed from a single sheet of material or, preferably, from multiple stacked sheets. Engagement section **270** may include a pair of engagement fingers **270***a* and **270***b* which may be dimensioned and configured to mountingly engage a pair of corresponding retention slots **272***a* formed in drive member **272**. Drive member **272** may include a proximal porthole (not shown) configured to receive the distal end **276** of control rod **52** (described above) when the proximal end of disposable loading unit **3016** is engaged with elongated body **14** of surgical stapling apparatus **10**.

The distal end of drive beam **266** may be defined by a vertical support strut **278** which supports a knife blade **280**, and an abutment surface **283** which engages the central portion of actuation sled **234** during a stapling procedure. Surface **285** at the base of surface **283** may be configured to receive a support member **287** slidably positioned along the bottom of the carrier **216**. Knife blade **280** may be positioned to translate slightly behind actuation sled **234** through a central longitudinal slot **282** in staple cartridge **220** to form an incision between rows of stapled body tissue. To provide support to the drive beam **266** within the housing **200** as the drive beam **266** is advanced axially, a blade stabilizing member **290** may be mounted within the housing **200**.

A retention flange **284** may project distally from vertical strut **278** and may support a pair of cylindrical cam rollers **286** at its distal end. Cam rollers **286** may comprise pressed in or welded in pins and be dimensioned and configured to engage camming surface **209** on anvil body **204** to clamp anvil portion **204** against body tissue. A pair of springs **207** may be provided between the proximal end of the anvil portion **204** and the upper mounting portion **236** to bias the anvil assembly **20** to a normally open position.

The reload unit **3016** depicted in FIGS. **94-97** employs a "passive" articulation arrangement. As can be seen in those FIGS., the reload unit **3016** includes a flexible articulation member **300** that is coupled to a housing assembly **200** by, for example, a proximal body collar **301**. The flexible articulation member **300** has a body portion **301** that may be fabricated from polyethylene, poly propylene or other suitable materials, for example, and include a plurality of kerfs **302** separated by ribs **304**. In various embodiments, the kerfs **302** and ribs **304** may be equally spaced along the flexible articulation member **300** thereby promoting a continuous bend radius when the flexible articulation member is articulated. A flexible articulation member **300** having multiple bend radii may be achieved by providing unequal spacing between the kerfs **302** and the ribs **304**. For example, such arrangement may be achieved by spacing the ribs **304** more closely at one end and farther apart at the other end. As will be appreciated by those of ordinary skill in the art, increasing the spacing of the kerfs **302** and/or the ribs **304** reduces the bend radius of the section having increased spacing, more closely approximating a pivot point bend connection. Conversely spacing the kerfs **3402** and/or ribs **304** more closely results in a more gradual bend, having a larger bend radius. Alternatively, the flexible articulation member **300** may be fabricated from a combination of materials, the exterior of which may be slotted stainless steel, which will function in a similar manner to the above-mentioned plastics and polymeric materials.

In the embodiment illustrated in FIGS. **94-97**, the kerfs **302** comprise annular grooves that extend at least partially around the perimeter of the flexible articulation member **300**. The kerfs **302** preferably, however, comprise semi-annular grooves which are separated by a central longitudinal spine **306** passing down the longitudinal axis L-L of the flexible articulation member **300** such that a first plurality of ribs are formed on one lateral side of the spine **306** and a second plurality of ribs are formed on another lateral side of the spine **306**. This spine **306** assists in providing stiffening to the flexible articulation member **300** and accommodates a slot **310** therethrough for receiving the surgical tools, such as the drive assembly **212**. The longitudinal spine **306** may run the entire longitudinal length of the flexible articulation member **300**. The flexible articulation member **300** may also include a pair of side slots **314** passing through each rib **304** on each lateral side for receiving a corresponding articulation plate **320**. See FIG. **96**. Such articulation plates **320** may be fabricated from a material that is relatively inelastic. That is, the plates **320** may be fabricated from a material that retains its position after bending. Articulation plates **320** may be fabricated from materials such as, for example, lead, copper, stainless steel, titanium, etc.

The disposable loading unit **3016** is sized for insertion, in a non-articulated state as depicted in FIGS. **94** and **95**, through a trocar cannula passageway to a surgical site in a patient (not shown) for performing a surgical procedure. For example, the disposable loading unit **3016** may be sized to be inserted through a gastroscope or colonoscope. After the tool assembly **17** portion of the disposable loading unit **3016** has been inserted through the trocar cannula passageway, the clinician can move the tool assembly **17** to a desired articulated orientation by "passively" bringing the tool assembly **17** into contact with the organ or other portion of the body or another medical instrument **330** (e.g., graspers—FIG. **97**) to apply an external force to the tool assembly **17** to cause it to articulate within a plane relative to the housing portion **200** of the disposable loading unit **3016**. The person of ordinary skill in the art will appreciate once the tool assembly **17** is articulated to the desired position, the articulation plates **320** serve to retain the tool assembly **17** in that configuration. The tool assembly **17** can be articulated through an angle "PA" as illustrated in FIG. **97**.

FIGS. **98-101** illustrate another reload unit **3016'** embodiment of the present invention. Reload unit **3016'** is substantially identical to reload unit **16**, except that reload unit **3016'** is constructed to be passively articulated as well as actively articulated. As can be seen in FIGS. **98** and **99**, the reload unit **3016'** includes a first articulation joint **340** that is formed from a mounting assembly **202'** that includes a distal portion **206** and a proximal portion **226** that is pivotally

coupled thereto. In various embodiments, the distal portion **206** includes an upper mounting portion **208** and a lower mounting portion **210**. A pivot pin **244** may be formed on each of the mounting portions **206'**, **208'** to define a pivot axis "A1" which may be substantially perpendicular to the longitudinal axis "L'L' of the disposable reload unit **3016'**. The proximal portion **226** of the mounting assembly **202'** may comprise an upper mounting portion **236'** and a lower mounting portion **238'**. The distal portion **206** of the mounting member **202'** and the proximal portion **226** of the mounting member **202'** may be pivotally coupled together by a pair of coupling members **246**. Coupling members **246** each have a hole **247** therethrough for receiving a corresponding pin **244** therethrough. The proximal end **248** of each coupling member **246** is configured to be interlockingly received in a corresponding groove **251** formed in the upper mounting portion **236'** and lower mounting portion **238'**. The proximal portion **226** of mounting assembly **202'** may be non-rotatably mounted in a distal body adapter **243** as shown in FIG. **99**. Housing portion **200** of disposable loading unit **3016'** may include an upper housing half **250** and a lower housing half **252**. The proximal end of housing half **250** may include engagement nubs **254** for releasably engaging elongated body **14** (not shown in FIG. **99**) and an insertion tip **193**. Nubs **254** form a bayonet type coupling with the distal end of body **14** which will be discussed in further detail below. Housing halves **250** and **252** define a channel **253** for slidably receiving axial drive assembly **212** therein. A pair of springs **207** may be provided between the proximal end of the anvil portion **204** and the upper mounting portion to bias the anvil assembly **20** to a normally open position.

This embodiment may also employ a flexible articulation member **300'** that may be substantially similar to the flexible articulation member **300** described above, except for the differences noted below. The distal end of the flexible articulation member **300'** may be non-rotatably affixed to the distal body adapter **243** and the proximal end of the flexible articulation member **300'** may be non-rotatably affixed to the proximal body collar **301** that is attached to the housing portion **200**. In this embodiment, an articulation link **256'** may be employed to also enable the user to actively articulate the tool assembly **17**. Articulation link **256'** may have an elongated flexible wire portion **450** that terminates in a distal hook portion **452**. The wire portion **450** may be received in a lumen **420** in the flexible articulation member **300'**. The hooked end **452** may be pinned between distal portion **206** and lower mounting portion **210** by a pin affixed therebetween. See FIG. **99**. The flexible wire portion **450** may be attached to a rod portion **451** that has a tab or other hook portion **258'** that is configured for hooking engagement with a distal hook **165** formed on the distal end of the first articulation link **123** in a known manner as described in U.S. Pat. No. 5,865,361. See FIG. **10**. Such reload unit **3016'** arrangement may be passively articulated using flexible articulation member **300'** about angle "PA" in the manner described above through a range of travel "PA" or, if desired, the clinician may actively articulate the tool assembly **17** thereof about the first articulation axis "A1-A1" through a range of travel "AA" by activating the articulation lever **30** in the manner described in U.S. Pat. No. 5,865,361. See FIG. **101**.

FIGS. **102-104** illustrate another reload unit **3016"** embodiment of the present invention. Reload unit **3016"** may be substantially identical to reload unit **3016'**, except that reload unit **3016"** is constructed with two active articulation links **256**R, **256**L that enables the articulation link **300** to be actively pulled on one side while being actively pushed on the opposite side. As can be seen in FIG. **103** articulation links **256**R and **256**L may have a distal plate portion **430** that is sized to extend through a corresponding side slot **314** in the articulation member **300**. A thrust attachment feature **432** may be formed on the distal end of each distal plate portion **430** to retain the distal plate portion **430** within its respective side slot **314**. In alternative embodiments, the thrust feature may be molded into the articulation member **300** or other attachment arrangements may be used. Articulation link **256**R, **256**L may further have an elongated extension portion **334**R, **334**L that terminates in a hook portion **336**R, **336**L, respectively. In various embodiments, the articulation links **256**R, **256**L may be fabricated from metal or a series of laminated or stacked plates.

Referring to FIG. **104**, there is shown a control rod assembly **125'** that may be substantially similar to control rod assembly **125** described above, except that control rod assembly **125'** includes a right articulation link **123**R and a left articulation link **123**L. The right articulation link **123**R may have a distal hook **165**R formed thereon for detachable engagement with the hook portion **336**R of the articulation link **256**R in the disposable loading unit **3016"**. See FIG. **103**. Likewise, the left articulation link **123**L may have a distal hook portion **165**L formed thereon for detachable engagement with the hook portion **336**L of the articulation link **256**L in the disposable loading unit **3016"**. The right articulation link **123**R may further have a finger **164**R protruding from its proximal end, and the left articulation link **123**L may have a finger **164**L protruding from its proximal end. Although not specifically illustrated in FIG. **103**, a linkage bar, gear train, etc. may be employed to movably couple the fingers **164**R, **164**L to the arm **160** attached to the translation member **138'** such that as the translation member **138'** is axially advanced in the distal "DD" direction as described in detail above, the right articulation links **123**R and **256**R are advanced in the distal direction "DD" and the left articulation links **123**L and **256**L are pulled in the proximal direction "PD" to thereby cause the tool assembly **17** to pivot about the first articulation axis "A1-A1" to the right of the longitudinal axis L-L as illustrated in FIG. **101** or visa-versa. Likewise, in various embodiments, when the translation member **138'** is advanced in the proximal direction "PD", the right articulation links **123**R and **256**R are pulled in the proximal direction "PD" and the left articulation links **123**L and **256**L are advanced in the distal direction "DD" to thereby cause the tool assembly **17** to pivot to the left of the longitudinal axis L-L or visa-versa. Those of ordinary skill in the art will understand that such "pushing" and "pulling" action results in less stresses being applied to a single articulation link than those prior articulation arrangements that only employ a single articulation link. The flexible articulation member **300'** may require more force to bend or flex as opposed to the pivot pin arrangement like in **206**.

FIGS. **105-107** illustrate another reload unit **3016'** embodiment of the present invention. Reload unit **3016'** is essentially a combination of reload units **3016** and **3016'** in that reload unit **3016'"** employs the articulation link **256'** and the articulation links **256**R and **256**L that enables the articulation link **300'** to be passively articulated through a range of travel "PA" and actively articulated through an additional range of travel "AA".

FIGS. **108-111** illustrate another surgical stapling apparatus **4010** of the present invention that is constructed for use with a disposable loading unit. FIG. **108** depicts a disposable loading unit **16** that has a first articulation joint **340** of the type and construction described above that enables the tool

assembly **17** to pivot about a first pivot axis A**1**-A**1** relative to the disposable loading unit housing **200** that is attached to the surgical stapling apparatus **4010**. The surgical stapling apparatus **4010** may have aspects and components that are substantially similar to the aspects and components of the various stapling apparatus embodiments described above, except for the unique and novel articulation system **4012**, various configurations of which, will be described in detail below. Those components that are the same as the components employed in the above-mentioned surgical stapling apparatus embodiments will be labeled with the same element numbers and those of ordinary skill in the art can refer to the disclosure set forth hereinabove that explains their construction and operation. As can be seen in FIG. **108**, the articulation system **4012** may include an intermediate articulation joint **4020** that is situated in the elongated body assembly **4014** between the disposable loading unit **16** and the handle assembly **12** such that the disposable loading unit **16** may be selectively pivoted relative to the handle assembly **12** about a second articulation axis A**2**-A**2**. As illustrated in FIG. **108**, the second articulation axis A**2**-A**2** is substantially transverse to the longitudinal axis L-L and the first articulation axis A**1**-A**1**.

As can be seen in FIGS. **108** and **109**, the elongated body assembly **4014** may comprise a distal body segment **4030** and a proximal body segment **4040** that are coupled together at the intermediate articulation joint **4020**. The articulation system **4012** may further include a translation member **138** that has an upstanding arm portion **540** that has a notch **542** therein that is sized to receive a tab **544** formed on the sensor cylinder **178**. The distal end of translation member **138** may include an arm **546** which includes an opening **548** configured to receive a finger **164** extending from the proximal end of articulation link **4050**. A pin **166** that may be constructed from a non-abrasive material, e.g., Teflon® or metal coated with Teflon®, is secured to translation member **138** and dimensioned to be received within stepped camming surface **148** (shown in FIG. **11**). The operation of those components was described above.

FIG. **110** illustrates an intermediate articulation joint embodiment **4020** of the present invention. As can be seen in that Figure, the distal body segment **4030** is hollow and has a proximal end **4031** that has two proximally protruding lugs **4032** formed thereon. Each lug **4032** may have a pin **4034** protruding therefrom and at least one locking rib **4036** formed thereon. The proximal body segment **4040** is hollow and, as can be seen in FIG. **109**, has a proximal end **4041** that has openings **128** for receiving a corresponding radial projection **132** (shown in FIG. **10**) formed on the rotatable knob **28** as was described above. As can be seen in FIG. **110**, the distal end **4042** of the proximal body segment **4040**, may have a pair of distally protruding lugs **4044** that each have a pin receiving hole **4046** therethrough for receiving a corresponding pin **4034** on the distal body segment **4030** to enable the distal body segment **4030** to pivot relative to the proximal body segment **4040**. Each lug **4044** may have a series of radial grooves **4048** formed thereon to mesh in confronting engagement with the corresponding locking ribs **4036** on the lugs **4032**. Thus, when assembled together, the pins **4034** and holes **4046** serve to define the second articulation axis A**2**-A**2** and are loosely fitted to enable the distal body segment **4030** to be pivoted to a desired position relative to the proximal body segment **4040** by applying a force to the distal body segment **4030** while keeping the proximal body segment **4040** stationary or visa-versa. The interaction between the locking ribs **4036** and the grooves **4048** serve to retain the distal body segment **4030** in the desired position relative to the proximal body segment **4040** after the articulation force has been discontinued. In alternative embodiments, the locking ribs **4036** may be formed on the distally protruding lugs **4044** and the radial grooves **4048** may be formed on the proximally protruding lugs **4032**. In still other embodiments, at least one locking rib **4036** may be formed on one lug **4032** and radial grooves **4048** may be provided on the lug **4044** attached thereto and at least one locking rib **4036** may be provided on the other lug **4044** and the grooves **4048** provided on the lug **4032** attached to that lug **4044**. When coupled together by the intermediate articulation joint **4020**, the distal body segment **4030** and the proximal body segment **4040** of the elongated body assembly **4014** define the longitudinal axis L-L.

As indicated above, the articulation system **4012** may further comprise an articulation link **4050** that includes a proximal portion **4052** that has a finger **164** protruding therefrom that is configured to be received in the opening **548** in the arm **546** of the translation member **138**. See FIG. **109**. The articulation link **4050** may further have a distal portion **4054** that is pivotally pinned to the proximal portion **4052** such that the distal portion **4054** can pivot relative to the proximal portion **4052** about an articulation axis A**2'**-A**2'**. The distal end of the distal portion **4054** has a distal hook **165** formed thereon for detachable engagement with the hook portion of the articulation link in the disposable loading unit **16** in a known manner. As can also be seen in FIG. **109**, this embodiment may employ a hollow sensor tube **4060** that has a distal portion **4062** that is pivotally coupled to a proximal portion **4064** for pivotal travel relative thereto about an articulation axis A**2"**-A**2"**. The distal portion **4062** and the proximal portion **4064** of the sensor tube **4060** may be loosely coupled together to enable the sensor tube **4060** to accommodate some axial misalignment of components. For example, in various embodiments, the sensor tube portions **4062** and **4064** may be coupled to permit a ±0.125" axial movement of those components relative to each other. The sensor tube **4060** may operate in the same way as was described above with respect to sensor tube **123** and may have a control rod locking mechanism (not shown) of the type described above attached thereto.

As can also be seen in FIG. **109**, the articulation system **4012** may include a control rod assembly **4070** that is similar in operation to control rod **52** above, except for the articulation segment **4074** that interconnects a distal portion **4072** and a proximal portion **4076**. The articulation segment **4074** may comprise a series of laminated metal strips that will enable the control rod assembly **4070** to bend as the elongated body assembly **4014** is articulated about the intermediate articulation joint **4042**, yet be sufficiently stiff to axially transmit the firing forces from the handle assembly **12** to the disposable loading unit **16**. Other flexible joint arrangements could also be employed. In addition, an O-ring **4080** may be provided between the proximal portion **4076** of the control rod assembly **4070** and the sensor tube **4060** to provide additional support to the control rod assembly **4070** therein. When assembled together, those of ordinary skill in the art will appreciate that the articulation link **4050** and the sensor tube **4060** are supported within the elongated body assembly **4014** such that the axes A**2"**-A**2"** and A**2'**-A**2'** substantially coincide with the second articulation axis A**2**-A**2**. Likewise, the control rod assembly **4070** is supported within the elongated body assembly **4014** such that the articulation segment **4074** spans the intermediate articulation joint **4020**.

FIG. **111** depicts use of the surgical stapling apparatus **4010** in an "open" surgery setting wherein the disposable

loading unit **16** and elongated body assembly **4014** are inserted into the patient through an open incision in the tissue "T". As can be understood from reference to that Figure, the tool assembly **17** may be selectively articulated about the first articulation axis A**1**-A**1** by manipulating the articulation lever **30** as was described above. The disposable loading unit **16** may also be pivoted about the second articulation axis A**2**-A**2** relative to the proximal body segment **4040** of the elongated body assembly **4014** and handle assembly **12** by "passively" bringing the tool assembly **17** into contact with the organ or other portion of the body or by grasping the disposable reload unit **16** with another surgical instruments such as, for example, graspers (not shown) to apply an external force to the tool assembly **17** to cause it to articulate about the second articulation axis A**2**-A**2**. The person of ordinary skill in the art will appreciate that once the tool assembly **17** is articulated to the desired position about the second articulation axis A**2**-A**2**, it is retained in that position by virtue of the engagement between the locking ribs **4036** and radial grooves **4048** as described above. To enable the stapling apparatus **4010** to be used endoscopically through a conventional trocar **4000** as shown in FIG. **112**, the intermediate articulation joint **4020** may be provided adjacent the rotation knob **28** such that the articulation joint **4020** can remain external to the trocar **4000** to enable the handle assembly **12** to be pivoted about the second articulation axis A**2**-A**2**, relative to the portion of the surgical stapling apparatus **4010** protruding into the patient through the trocar **4000**.

FIGS. **113**-**115** illustrate an articulation system **5012** that may be employed with various surgical stapling apparatuses of the present invention. Those components that are the same as the components employed in the above-mentioned embodiments will be labeled with the same element numbers and those of ordinary skill in the art can refer to the disclosure set forth hereinabove that explains their construction and operation. The articulation system **5012** may include an intermediate articulation joint **5020** in the elongated body assembly **5014** that facilitates pivotal travel of the disposable reload unit **16** relative to the handle assembly **12** about a second articulation axis A**2**-A**2** that is substantially transverse to the longitudinal axis L-L and the first articulation axis A**1**-A**1**. The elongated body assembly **5014** may comprise a distal body segment **5030** and a proximal body segment **5040** that are coupled together at the intermediate articulation joint **5020**. As shown in FIG. **114**, the articulation system **5012** may further include a translation member **138** that has an upstanding arm portion **540** that has a notch **542** therein that is sized to receive a tab **544** formed on the sensor cylinder **178**. The distal end of translation member **138** may include an arm **546** which includes an opening **548** configured to receive a finger **164** extending from the proximal end of articulation link **4050**. A pin **166** that may be constructed from a non-abrasive material, e.g., Teflon® or metal coated with Teflon® is secured to translation member **138** and dimensioned to be received within stepped camming surface **148** (shown in FIG. **11**). The operation of these components was described above.

As further shown in FIG. **114**, the distal body segment **5030** is hollow and has a proximal end **5031** that has two proximally protruding lugs **5032**. Each lug **5032** has a pin **5034** protruding therefrom. The proximal body segment **5040** is hollow and has an opening **128** for receiving a corresponding radial projection **132** formed on the rotatable knob **28** as was described above. See FIGS. **114** and **115**. The distal end **5042** of the proximal body segment **5040** may have a pair of distally protruding lugs **5044** that each have a pin receiving hole (not shown) therethrough for receiving a corresponding pin **5034** on the distal body segment **5030**, to enable the distal body segment **5030** to pivot relative to the proximal body segment **5040**. In various embodiments, the intermediate articulation joint **5020** may be formed with the radial grooves **4048** and locking ribs **4036** as was described above. The intermediate articulation joint **5020** in other embodiments may be made without such radial grooves and locking ribs.

The articulation system **5012** illustrated in FIGS. **113**-**115** is an "active" articulation system and may include an articulation bar **5050** that has a distal end **5052** that is pinned or otherwise attached to the distal body segment **5030** by a pin **5054**. As shown in FIG. **114**, the articulation bar **5050** may ride in an elongated bar slot **5043** provided in the proximal body segment **5040** of the elongated body assembly **5014**. To provide additional support to the articulation bar **5050**, a shroud **5080** may be placed over the proximal body segment **5040**. See FIGS. **113** and **115**. The articulation bar **5050** may have a proximal end **5056** that is integrally formed with or otherwise non-movably attached to a stabilizing collar **5060**. The stabilizing collar **5060** may be sized to fit about the proximal body segment **5040** and have a base portion **5062** attached thereto that is attached to or formed with a button post **5064** that terminates in an articulation button **5066**. As can be seen in FIGS. **114** and **115**, the base portion **5062** may be formed with two upwardly extending lock detents **5068** that are adapted to retainingly engage locking racks **5072** formed on two locking plates **5070** that are non-movably supported in the rotation knob **28**. As shown in FIGS. **114** and **115**, two locking plates **5070** may be employed—one on each side of the button post **5064**.

Referring to FIG. **113**, to articulate the distal body segment **5030** as well as the distal portion **4072** of the control rod assembly **4070** (and the disposable loading unit attached thereto) in the right direction "RD" about the second articulation axis A**2**-A**2**, the clinician simply slides the articulation button **5066** in the distal "D-D' direction. To articulate the distal body segment **5030**, distal portion **4072** of the control rod assembly **4070** and the disposable loading unit in the left direction "LD", the clinician slides the articulation button **5066** in the proximal direction "PD". Those of ordinary skill in the art will understand that the articulation system **5020** may be effectively employed with surgical stapling apparatuses that are adapted to receive articulatable and non-articulatable disposable reload units. The articulation system **5012** depicted in FIGS. **113**-**115** is well adapted for use in open surgical applications. The articulation system **5012'** depicted in FIG. **116** may be better suited for endoscopic applications. As can be seen in that Figure, the articulation joint **5020** is closer to the rotation knob **28** such that when in use, the articulation joint **5020** is external to the trocar through which the distal body segment **5030** of the elongated body assembly **5014** extends.

FIGS. **117**-**121** illustrate a unique and novel "active" articulation system **6012** that may be used in connection with various surgical stapling apparatuses adapted for use with disposable loading units. Those components of the articulation system **6012** that are the same as the components employed in the above-mentioned embodiments will be labeled with the same element numbers and those of ordinary skill in the art can refer to the disclosure set forth hereinabove that explains their construction and operation. In various embodiments, the articulation system **6012** includes a rotation knob assembly **6028** that, except for the differences noted below, is similar to rotation knob **28** described above. As can be seen in FIG. **118**, the rotation

knob **6028** has an articulation shroud extension **6030** that has a distal articulation ball **6032** formed thereon. In various embodiments, the rotation knob assembly **6028** may be formed from two segments **6028***a* and **6028***b* that are molded from plastic or other suitable material and which may be interconnected by, for example, snap features, screws, adhesive, etc. See FIG. **117**. Rotatably received on the distal articulation ball **6032** is a distal body segment **6040** whose proximal end **6042** forms an articulation socket **6044** that may be formed from cover segments **6040***a* and **6040***b* that may be interconnected by snap features, adhesive, etc. As illustrated in FIG. **118**, the articulation system **6012** may also include a translation member of the type and construction described above which is configured to receive a finger **164** extending from the proximal end of articulation link **4050'**. Articulation link **4050'** is similar to articulation link **4050** described above except that the articulation link **4050'** has a flexible connector portion (coil spring, etc.) **6025** formed therein.

As can be seen in FIG. **118**, the articulation system **6012** may further comprise a hollow sensor tube **6060** that has a distal portion end **6062** that is coupled to a proximal portion **6064** by a flexible connector (coil spring, etc.) **6066**. The sensor tube **6060** may operate in the same way as was described above with respect to sensor tube **123** and may have a control rod locking mechanism (not shown) of the type described above attached thereto. As can also be seen in FIG. **118**, the articulation system **6012** may include a control rod assembly **6070** that is similar in operation to control rod **52** above, except for the flexible connector segment **6074** that interconnects a distal portion **6072** and a proximal portion **6076**. The flexible connector segment **6074** may comprise a coil spring, etc. that will enable the control rod assembly **6070** to bend during articulation, yet be sufficiently stiff to axially transmit the firing forces from the handle assembly **12** to the disposable loading unit **16**. As can be seen in FIGS. **118** and **119**, the control rod assembly **6070** extends through the sensor tube **6060** and the proximal end portion **6076** is supported therein by an O-ring **6068**. To provide additional axial support to the proximal portion **6076** of the control rod assembly **6070** and the flexible connector segment **6074**, a proximal firing rod tube **6080** may be employed. See FIGS. **118** and **119**. When assembled together, those of ordinary skill in the art will appreciate that the flex connector portion **6025** of articulation link **4050'**, flexible connector portion **6066** of the sensor tube **6060** and the flexible connector segment **6074** are supported within the articulation ball **6032** as shown in FIG. **119**.

As can be seen in FIGS. **118** and **119**, the articulation system **6012** further comprises a articulation handle **6090** that is movably supported on the distal end **6034** of the shroud extension **6030**. In various embodiments, the articulation handle **6090** may be formed from two arcuate segments **6090***a* and **6090***b* that are coupled together, by, for example, screws **6091** or other suitable fastener arrangements. The articulation handle **6090** is coupled to two diametrically opposed horizontal articulation bands **6100** and two diametrically opposed vertical articulation bands **6110**. See FIG. **118**, referring now to FIGS. **120** and **121**, in various embodiments, the proximal end **6102** of each horizontal articulation band **6100** may be pivotally coupled to a horizontal articulation pin **6104**. Likewise the proximal end **6112** of each vertical articulation band **6110** may be pivotally coupled to a vertical articulation pin **6114**. FIGS. **120** and **121**, illustrate one form of attaching the proximal end **6102** of a horizontal articulation band **6100** to a horizontal articulation pin **6104** as well as of attaching the proximal end **6112** of a vertical articulation band **6110** to a vertical articulation pin **6114**. As can be seen in those Figures, a ball connector **6120** may be coupled to the distal ends **6102**, **6112** and be rotatably received in a corresponding socket **6108**, **6118** in the horizontal and vertical articulation pins **6104**, **6114**, respectively. The horizontal articulation pins **6104** may extend through diametrically opposed horizontal slots **6036** (FIG. **118**) in the proximal end portion **6034** of the shroud extension **6030** to be received in holes **6092** in the articulation handle **6090**. Similarly, the vertical articulation pins **6114** extend through vertical slots **6038** formed in the proximal end portion **6034** of the shroud extension **6030** to be received in holes **6094** in the articulation ring **6090**.

In various embodiments, the horizontal articulation bands **6100** and the vertical articulation bands **6110** may comprise metal bands that will bend or flex about their weak axis (i.e., the axis that extends transversely to their length), but will not bend or flex in their strong axis (i.e., their elongated axis extending along their length). To provide support to the articulation bands **6100**, **6110** along their respective lengths, the horizontal articulation bands **6100** may be movably supported in elongated horizontal slots **6033** formed in the elongated shroud **6030**. The distal end **6106** of each horizontal articulation band **6100** may have a distal articulation pin **6109** protruding therefrom that extends through a corresponding horizontal slot **6037** in the ball portion **6032** of the elongated shroud **6030** to be coupled to the distal body segment **6040**. In various embodiments, the distal articulation pin **6109** extends through a hole in the corresponding distal end **6106** of the horizontal articulation band **6100** to enable the distal end **6106** thereof to rotate there around. Similarly, the distal end **6116** of each vertical articulation band **6110** may have a distal articulation pin **6119** protruding therefrom that extends through a corresponding vertical slot **6039** in the ball portion **6032** of the elongated shroud **6030** to be coupled to the distal body segment **6040**. See FIG. **119**. The distal articulation pins **6119** may extend through a hole in the distal end **6116** of a corresponding vertical articulation band **6110** to enable the distal end **6116** to rotate there-around.

Although not specifically illustrated in FIGS. **117-118**, those of ordinary skill in the art will understand that the distal body segment **6040** may be configured for operable attachment to an articulatable disposable loading unit or a non-articulatable disposable loading unit in the manner described above or in the manner that is known in the art. However, in this embodiment, the clinician can selectively articulate the distal body segment **6040** and the disposable loading unit attached thereto by selectively pivoting the articulation handle **6090** on the proximal end **6034** of the shroud extension **6030**. For example, FIG. **119** illustrates the articulation handle **6090** pivoted to a position wherein the distal body segment **6040** is pivoted in the vertical direction "VD". To pivot the distal body segment **6040** in a horizontal direction (the direction perpendicular to the direction VD depicted in FIG. **119**), the clinician first brings the articulation handle back to a vertical neutral position (wherein the distal body segment **6040** is coaxial with the shroud extension **6030** and then the clinician pivots the articulation handle such that one side portion of the handle **6090** moves in the distal direction, while the other side moves in the proximal direction (represented by arrows "DD" and "PD" in FIG. **117**). Such active articulation comprises substantially bi-planar articulation. That is, the distal body segment **6040** and the disposable loading unit coupled thereto can only be selectively articulated through a vertically extending plane or through a horizontally extending plane that is

substantially orthogonal to the vertically extending plane. The distal body segment **6040** and the disposable loading unit cannot be articulated in the vertical and horizontal directions at the same time. However, those of ordinary skill in the art will appreciate that the rotation knob **6028** by virtue of its rotatable attachment to the handle assembly facilitates selective rotation of the distal body segment **6040** and the disposable loading unit coupled thereto about the longitudinal axis L-L.

FIGS. **122** and **123** illustrate another surgical stapling apparatus embodiment **7010** of the present invention that employs a passive articulation system **7012**. As can be seen in those Figures, the passive articulation system **7012** may comprise a rotation knob **7028** that is somewhat similar to rotation knob **28** described above, except for the differences discussed below. Those components of the surgical stapling apparatus **7010** that are the same as the components employed in the above-mentioned embodiments will be labeled with the same element numbers and those of ordinary skill in the art can refer to the disclosure set forth hereinabove that explains their construction and operation. As can be seen in FIG. **123**, the rotation knob **7028** has an articulation socket **7030** formed therein that is sized to rotatably receive a ball **7016** formed on an elongated body assembly **7014**. In alternative embodiments, the socket **7030** may be formed in a casing segment that is non-rotatably supported within the rotatable knob **7028**. The distal end **7015** of the elongated body assembly **7014** is configured for operable attachment to an articulatable or non-articulatable disposable loading unit in a known manner. As can also be seen in FIG. **123**, the articulation system **7012** may further include a translation member **138** that has an upstanding arm portion **540** that has a notch **542** therein that is sized to receive a tab (not shown) formed on the sensor cylinder (not shown) in the manner described above. The distal end of translation member **138** may include an arm **546** which includes an opening **548** configured to receive a finger **164** extending from the proximal end **7052** of articulation link **7050**. The distal end **7054** of the articulation link **7050** has a distal hook **165** formed thereon which can hookingly engage an articulation tab or hook formed on an articulation link supported in the disposable reload unit. A pin **166** that may be constructed from a non-abrasive material, e.g., Teflon® or metal coated with Teflon®, is secured to translation member **138** and dimensioned to be received within stepped camming surface **148** (shown in FIG. **11**). As can be seen in FIG. **123**, a flexible member **7055** in the form of a coil spring or the like may be provided in the articulation link **7050** adjacent the proximal end **7052** thereof.

The passive articulation system **7012** may further comprise a hollow sensor tube **7060** that has a distal portion end **7062** that is coupled to a proximal portion **7064** by a flexible connector (coil spring, etc.) **7066**. The sensor tube **7060** may operate in the same way as was described above with respect to sensor tube **123** and may have a control rod locking mechanism (not shown) of the type described above attached thereto. As can also be seen in FIG. **123**, the articulation system **7012** may include a control rod assembly **7070** that is similar in operation to control rod **52** above, except for the flexible connector segment **7074** that interconnects a distal portion **7072** and a proximal portion **7076**. The flexible connector segment **7074** may comprise a coil spring, etc. that will enable the control rod assembly **7070** to bend during articulation, yet be sufficiently stiff to axially transmit the firing forces from the handle assembly **12** to the disposable reload unit **16**. The firing rod assembly **7070** extends through the sensor tube **7060** and the distal portion **7072** is supported therein by an O-ring **7068**. When assembled together, those of ordinary skill in the art will appreciate that the flex connector portion **7055** of articulation link **7050**, flexible connector portion **7066** of the sensor tube **7060** and the flexible connector segment **7074** of the control rod assembly **7070** are at least partially supported within the articulation ball **7016** and socket **7030**.

FIG. **122** illustrates use of the surgical stapling apparatus **7010** of the present invention with a conventional trocar **4000**. As can be seen in that Figure, a disposable loading unit **16** is coupled to the elongated body assembly **7014**. Although an articulatable disposable loading unit **16** is illustrated, the person of ordinary skill in the art will understand that the apparatus **7012** may be effectively employed with non-articulating disposable loading units. After the trocar **4000** has been installed through the tissue "T" utilizing known techniques, the clinician can insert the disposable loading unit **16** through the trocar into the patient. If an articulatable disposable loading unit **16** is employed, the clinician must orient the disposable loading unit in a non-articulated state to insert it through the trocar. After the disposable loading unit **16** has been inserted into the patient and actuated to clamp onto the target tissue in the manners described above, the clinician may articulate the handle simply by pivoting the handle assembly **12** about the ball and socket articulation joint **7020**. The ball portion **7016** may be sized relative to the socket **7030** such that a sufficient amount of friction is established between the components at rest to retain them in position, yet not be so great as to prevent manipulation of those components relative to each other. In other embodiments, detents may be provided in the ball and socket joint components to retain the joint in various positions. The clinician may also manipulate the handle assembly **12** relative to the elongated body assembly **7014** prior to clamping onto the target tissue by grasping the proximal end of the elongated body assembly protruding from the trocar **4000** and then manipulating the handle assembly **12** relative thereto.

While several embodiments of the invention have been described, it should be apparent, however, that various modifications, alterations and adaptations to those embodiments may occur to persons skilled in the art with the attainment of some or all of the advantages of the invention. For example, according to various embodiments, a single component may be replaced by multiple components, and multiple components may be replaced by a single component, to perform a given function or functions. This application is therefore intended to cover all such modifications, alterations and adaptations without departing from the scope and spirit of the disclosed invention as defined by the appended claims.

The devices disclosed herein can be designed to be disposed of after a single use, or they can be designed to be used multiple times. In either case, however, the device may be reconditioned for reuse after at least one use. Reconditioning may include any combination of the steps of disassembly of the device, followed by cleaning or replacement of particular pieces, and subsequent reassembly. In particular, the device may be disassembled, and any number of particular pieces or parts of the device can be selectively replaced or removed in any combination. Upon cleaning and/or replacement of particular parts, the device may be reassembled for subsequent use either at a reconditioning facility, or by a surgical team immediately prior to a surgical procedure. Those of ordinary skill in the art will appreciate that the reconditioning of a device may utilize a variety of different techniques for disassembly, cleaning/replacement,

and reassembly. Use of such techniques, and the resulting reconditioned device, are all within the scope of the present application.

Preferably, the invention described herein will be processed before surgery. First a new or used instrument is obtained and, if necessary, cleaned. The instrument can then be sterilized. In one sterilization technique, the instrument is placed in a closed and sealed container, such as a plastic or TYVEK® bag. The container and instrument are then placed in a field of radiation that can penetrate the container, such as gamma radiation, x-rays, or higher energy electrons. The radiation kills bacteria on the instrument and in the container. The sterilized instrument can then be stored in the sterile container. The sealed container keeps the instrument sterile until it is opened in the medical facility.

Any patent, publication, or other disclosure material, in whole or in part, that is said to be incorporated by reference herein is incorporated herein only to the extent that the incorporated materials does not conflict with existing definitions, statements, or other disclosure material set forth in this disclosure. As such, and to the extent necessary, the disclosure as explicitly set forth herein supersedes any conflicting material incorporated herein by reference. Any material, or portion thereof, that is said to be incorporated by reference herein, but which conflicts with existing definitions, statements, or other disclosure material set forth herein will only be incorporated to the extent that no conflict arises between that incorporated material and the existing disclosure material.

The invention which is intended to be protected is not to be construed as limited to the particular embodiments disclosed. The embodiments are therefore to be regarded as illustrative rather than restrictive. Variations and changes may be made by others without departing from the spirit of the present invention. Accordingly, it is expressly intended that all such equivalents, variations and changes which fall within the spirit and scope of the present invention as defined in the claims be embraced thereby.

What is claimed is:

1. A surgical instrument, comprising:

a housing;

an elongate shaft configured for operable attachment to a surgical end effector; and

a selectively lockable rotation system comprising:

a mounting member coupled to said elongate shaft and being rotatably supported on said housing for selective rotation relative to said housing about a longitudinal axis defined by said elongate shaft; and

a switch member supported for selective longitudinal movement relative to said housing and said mounting member between an unlocked position wherein said mounting member is freely rotatable relative to said housing and a locked position wherein a locking formation on a distal end of said switch member is in retaining engagement with said mounting member to prevent said mounting member and said elongate shaft from rotating relative to said housing.

2. The surgical instrument of claim **1**, further comprising: an articulation system comprising:

an articulation joint on said elongate shaft for facilitating articulation of the surgical end effector relative to said elongate shaft about an articulation axis that is transverse to said longitudinal axis;

an articulation link configured to operably interface with the surgical end effector to apply articulation motions thereto; and

an articulation actuator supported for movable travel on said housing and interfacing with said articulation link to selectively apply actuation motions to said articulation link.

3. The surgical instrument of claim **2**, wherein said articulation actuator comprises a grip member supported on said mounting member for selective movement relative thereto.

4. The surgical instrument of claim **2**, further comprising a braking system for preventing said articulation actuator from applying said actuation motions to said articulation link during rotation of said mounting member and said elongate shaft about said longitudinal axis.

5. The surgical instrument of claim **4**, wherein said articulation actuator comprises a grip member movably supported on said mounting member and wherein said braking system is configured to lock said grip member to said mounting member when said switch member is in said unlocked position and to permit said grip member to be selectively axially movable relative to said mounting member when said switch member is in said locked position.

6. The surgical instrument of claim **5**, wherein said braking system comprises:

a brake band supported for selective frictional engagement with said mounting member and said grip member; and

a brake cam operably interfacing with said switch member such that when said switch member is in said unlocked position, said brake cam moves said brake band into frictional engagement with said mounting member and said grip member such that rotation of said grip member results in rotation of said mounting member and said elongate shaft and when said switch member is in said locked position, said brake cam moves said brake band out of frictional engagement with said mounting member and said grip member to permit said grip member to axially move relative to said mounting member.

7. The surgical instrument of claim **1**, wherein the surgical end effector comprises a disposable loading unit.

8. The surgical instrument of claim **7**, wherein said disposable loading unit comprises:

a tool assembly removably coupled to a distal end of said elongate shaft;

an anvil movably supported on said tool assembly between an open and closed positions in response to applications of closing and opening motions thereto; and

a knife blade movably supported in said tool assembly for axial travel therein in response to an application of a firing motion thereto.

9. The surgical instrument of claim **1**, wherein the surgical end effector comprises:

a first end effector jaw operably coupled to said distal end of said elongate shaft; and

a second end effector jaw movably supported relative to said first end effector jaw in response to opening and closing motions applied thereto.

10. The surgical instrument of claim **1**, wherein said surgical end effector comprises a staple cartridge comprising a plurality of staples removably stored in said staple cartridge.

11. A surgical instrument, comprising:

a housing;

an elongate shaft;

rotation means for coupling said elongate shaft to said housing and facilitating selective rotation of said elon-

gate shaft relative to said housing about a longitudinal axis defined by said elongate shaft;

a surgical end effector operably coupled to said elongate shaft by an articulation joint to facilitate selective articulation of said surgical end effector relative to said elongate shaft in directions transverse to said longitudinal axis;

articulation means for selectively applying articulation motions to said surgical end effector; and

locking means interfacing with said rotation means and said articulation means such that when said rotation means is actuated, said locking means prevents said articulation means from applying said articulation motions to said surgical end effector and when said articulation means is actuated, said locking means prevents said rotation means from rotating said elongate shaft.

12. The surgical instrument of claim **11**, wherein said housing comprises a handle.

13. The surgical instrument of claim **11**, wherein said surgical end effector comprises a disposable loading unit.

14. The surgical instrument of claim **13**, wherein said disposable loading unit comprises:

a tool assembly removably coupled to a distal end of said elongate shaft;

an anvil movably supported on said tool assembly between an open and closed positions in response to applications of closing and opening motions thereto; and

a knife blade movably supported in said tool assembly for axial travel therein in response to an application of a firing motion thereto.

15. The surgical instrument of claim **11**, wherein said rotation means comprises a mounting member coupled to said elongate shaft and rotatably mounted to said housing.

16. The surgical instrument of claim **15**, wherein said articulation means comprises:

an articulation link configured to operably interface with said surgical end effector to apply said articulation motions thereto; and

an articulation actuator supported for movable travel on said housing and interfacing with said articulation link to selectively apply actuation motions to said articulation link.

17. The surgical instrument of claim **16**, wherein said articulation actuator comprises a grip member supported on said mounting member for selective movement relative thereto.

18. The surgical instrument of claim **11**, wherein said surgical end effector comprises a staple cartridge comprising a plurality of staples removably stored in said staple cartridge.

19. A surgical instrument, comprising:

a handle;

an elongate shaft comprising an articulation joint;

a surgical end effector operably coupled to said articulation joint;

an articulation system comprising:

an articulation link configured to operably interface with said surgical end effector to apply articulation motions thereto; and

an articulation actuator supported for movable travel on said handle and interfacing with said articulation link to selectively apply actuation motions to said articulation link and wherein said surgical instrument further comprises a selectively lockable rotation system comprising:

a mounting member coupled to said elongate shaft and being rotatably supported on said handle for selective rotation relative to said handle about a longitudinal axis defined by said elongate shaft; and

a switch member supported for selective longitudinal movement relative to said handle and said mounting member between an unlocked position wherein said mounting member is freely rotatable relative to said handle and a locked position wherein a locking formation on a distal end of said switch member is in retaining engagement with said mounting member to prevent said mounting member from rotating relative to said handle.

20. The surgical instrument of claim **19**, further comprising a braking system for preventing said articulation actuator from applying said actuation motions to said articulation link during rotation of said mounting member and said elongate shaft about said longitudinal axis.

21. The surgical instrument of claim **20**, wherein said articulation actuator comprises a grip member movably supported on said mounting member and wherein said braking system is configured to lock said grip member to said mounting member when said switch member is in said locked position and to permit said grip member to be selectively axially movable relative to said mounting member when said switch member is in said unlocked position.

22. The surgical instrument of claim **21**, wherein said braking system comprises:

a brake band supported for selective frictional engagement with said mounting member and said grip member; and

a brake cam operably interfacing with said switch member such that when said switch member is in said unlocked position, said brake cam moves said brake band into frictional engagement with said mounting member and said grip member such that rotation of said grip member results in rotation of said mounting member and said elongate shaft and when said switch member is in said locked position, said brake cam moves said brake band out of frictional engagement with said mounting member and said grip member to permit said grip member to axially move relative to said mounting member.

23. The surgical instrument of claim **19**, wherein said surgical end effector comprises a staple cartridge comprising a plurality of staples removably stored in said staple cartridge.

* * * * *