US009972304B2

(12) United States Patent
Paulik et al.

(10) Patent No.: US 9,972,304 B2
(45) Date of Patent: May 15, 2018

(54) **PRIVACY PRESERVING DISTRIBUTED EVALUATION FRAMEWORK FOR EMBEDDED PERSONALIZED SYSTEMS**

(71) Applicant: **Apple Inc.**, Cupertino, CA (US)

(72) Inventors: **Matthias Paulik**, San Jose, CA (US); **Henry G. Mason**, San Francisco, CA (US); **Matthew S. Seigel**, Cupertino, CA (US)

(73) Assignee: **Apple Inc.**, Cupertino, CA (US)

(*) Notice: Subject to any disclaimer, the term of this patent is extended or adjusted under 35 U.S.C. 154(b) by 0 days. days.

(21) Appl. No.: **15/266,949**

(22) Filed: **Sep. 15, 2016**

(65) **Prior Publication Data**

US 2017/0352346 A1 Dec. 7, 2017

Related U.S. Application Data

(60) Provisional application No. 62/345,401, filed on Jun. 3, 2016.

(51) **Int. Cl.**
G10L 15/01 (2013.01)
G10L 15/30 (2013.01)
(Continued)

(52) **U.S. Cl.**
CPC ***G10L 15/01*** (2013.01); ***G10L 15/063*** (2013.01); ***G10L 15/07*** (2013.01); ***G10L 15/30*** (2013.01)

(58) **Field of Classification Search**
USPC 704/231–257
See application file for complete search history.

(56) **References Cited**

U.S. PATENT DOCUMENTS

1,559,320 A 10/1925 Hirsh
2,180,522 A 11/1939 Henne
(Continued)

FOREIGN PATENT DOCUMENTS

CA 2666438 C 6/2013
CH 681573 A5 4/1993
(Continued)

OTHER PUBLICATIONS

2004 Chrysler Pacifica: U-Connect Hands-Free Communication System, The Best and Brightest of 2004, Brief Article, Automotive Industries, Sep. 2003, 1 page.
(Continued)

Primary Examiner — Abul Azad
(74) *Attorney, Agent, or Firm* — Dentons US LLP

(57) **ABSTRACT**

Systems and processes for evaluating embedded personalized systems are provided. In one example process, instructions that define an experiment associated with a personalized speech recognition system can be received. The instructions can define one or more experimental parameters. In accordance with the received instructions, a second personalized speech recognition system can be generated based on the personalized speech recognition system and the one or more experimental parameters. Additionally, the plurality of user speech samples can be processed using the second personalized speech recognition system to generate a plurality of speech recognition results and a plurality of accuracy scores corresponding to the plurality of speech recognition results. Second instructions can be received based on the plurality of accuracy scores. In accordance with the second instructions, the second speech recognition system can be activated.

25 Claims, 16 Drawing Sheets

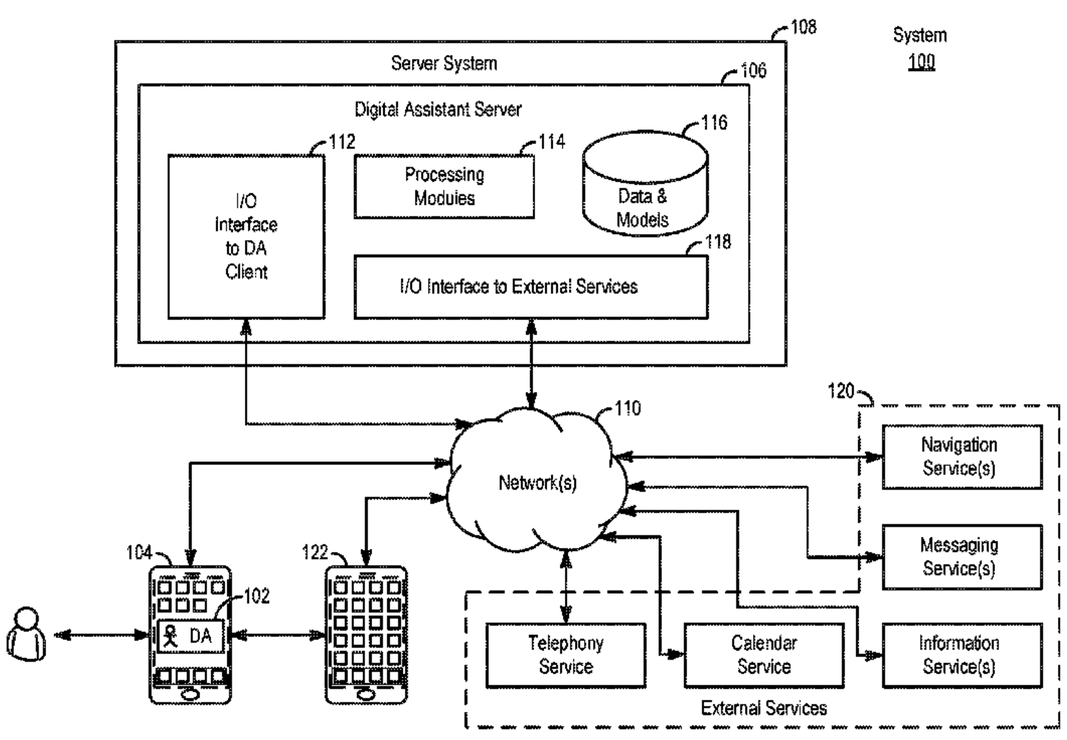

(51) **Int. Cl.**
G10L 15/07 (2013.01)
G10L 15/06 (2013.01)

(56) **References Cited**

U.S. PATENT DOCUMENTS

2,495,222 A 1/1950 Bierig
3,704,345 A 11/1972 Coker et al.
3,710,321 A 1/1973 Rubenstein
3,787,542 A 1/1974 Gallagher et al.
3,828,132 A 8/1974 Flanagan et al.
3,979,557 A 9/1976 Schulman et al.
4,013,085 A 3/1977 Wright
4,081,631 A 3/1978 Feder
4,090,216 A 5/1978 Constable
4,107,784 A 8/1978 Van Bemmelen
4,108,211 A 8/1978 Tanaka
4,159,536 A 6/1979 Kehoe et al.
4,181,821 A 1/1980 Pirz et al.
4,204,089 A 5/1980 Key et al.
4,241,286 A 12/1980 Gordon
4,253,477 A 3/1981 Eichman
4,278,838 A 7/1981 Antonov
4,282,405 A 8/1981 Taguchi
4,310,721 A 1/1982 Manley et al.
4,332,464 A 6/1982 Bartulis et al.
4,348,553 A 9/1982 Baker et al.
4,384,169 A 5/1983 Mozer et al.
4,386,345 A 5/1983 Narveson et al.
4,433,377 A 2/1984 Eustis et al.
4,451,849 A 5/1984 Fuhrer
4,485,439 A 11/1984 Rothstein
4,495,644 A 1/1985 Parks et al.
4,513,379 A 4/1985 Wilson et al.
4,513,435 A 4/1985 Sakoe et al.
4,577,343 A 3/1986 Oura
4,586,158 A 4/1986 Brandle
4,587,670 A 5/1986 Levinson et al.
4,589,022 A 5/1986 Prince et al.
4,611,346 A 9/1986 Bednar et al.
4,615,081 A 10/1986 Lindahl
4,618,984 A 10/1986 Das et al.
4,642,790 A 2/1987 Minshull et al.
4,653,021 A 3/1987 Takagi
4,654,875 A 3/1987 Srihari et al.
4,655,233 A 4/1987 Laughlin
4,658,425 A 4/1987 Julstrom
4,670,848 A 6/1987 Schramm
4,677,570 A 6/1987 Taki
4,680,429 A 7/1987 Murdock et al.
4,680,805 A 7/1987 Scott
4,686,522 A 8/1987 Hernandez et al.
4,688,195 A 8/1987 Thompson et al.
4,692,941 A 9/1987 Jacks et al.
4,698,625 A 10/1987 McCaskill et al.
4,709,390 A 11/1987 Atal et al.
4,713,775 A 12/1987 Scott et al.
4,718,094 A 1/1988 Bahl et al.
4,724,542 A 2/1988 Williford
4,726,065 A 2/1988 Froessl
4,727,354 A 2/1988 Lindsay
RE32,632 E 3/1988 Atkinson
4,736,296 A 4/1988 Katayama et al.
4,750,122 A 6/1988 Kaji et al.
4,754,489 A 6/1988 Bokser
4,755,811 A 7/1988 Slavin et al.
4,759,070 A 7/1988 Voroba et al.
4,776,016 A 10/1988 Hansen
4,783,804 A 11/1988 Juang et al.
4,783,807 A 11/1988 Marley
4,785,413 A 11/1988 Atsumi
4,790,028 A 12/1988 Ramage
4,797,930 A 1/1989 Goudie
4,802,223 A 1/1989 Lin et al.
4,803,729 A 2/1989 Baker
4,807,752 A 2/1989 Chodorow
4,811,243 A 3/1989 Racine
4,813,074 A 3/1989 Marcus
4,819,271 A 4/1989 Bahl et al.
4,827,518 A 5/1989 Feustel et al.
4,827,520 A 5/1989 Zeinstra
4,829,576 A 5/1989 Porter
4,829,583 A 5/1989 Monroe et al.
4,831,551 A 5/1989 Schalk et al.
4,833,712 A 5/1989 Bahl et al.
4,833,718 A 5/1989 Sprague
4,837,798 A 6/1989 Cohen et al.
4,837,831 A 6/1989 Gillick et al.
4,839,853 A 6/1989 Deerwester et al.
4,852,168 A 7/1989 Sprague
4,862,504 A 8/1989 Nomura
4,875,187 A 10/1989 Smith
4,878,230 A 10/1989 Murakami et al.
4,887,212 A 12/1989 Zamora et al.
4,896,359 A 1/1990 Yamamoto et al.
4,903,305 A 2/1990 Gillick et al.
4,905,163 A 2/1990 Garber et al.
4,908,867 A 3/1990 Silverman
4,914,586 A 4/1990 Swinehart et al.
4,914,590 A 4/1990 Loatman et al.
4,918,723 A 4/1990 Iggulden et al.
4,926,491 A 5/1990 Maeda et al.
4,928,307 A 5/1990 Lynn
4,931,783 A 6/1990 Atkinson
4,935,954 A 6/1990 Thompson et al.
4,939,639 A 7/1990 Lee et al.
4,941,488 A 7/1990 Marxer et al.
4,944,013 A 7/1990 Gouvianakis et al.
4,945,504 A 7/1990 Nakama et al.
4,953,106 A 8/1990 Gansner et al.
4,955,047 A 9/1990 Morganstein et al.
4,965,763 A 10/1990 Zamora
4,972,462 A 11/1990 Shibata
4,974,191 A 11/1990 Amirghodsi et al.
4,975,975 A 12/1990 Filipski
4,977,598 A 12/1990 Doddington et al.
4,980,916 A 12/1990 Zinser
4,985,924 A 1/1991 Matsuura
4,992,972 A 2/1991 Brooks et al.
4,994,966 A 2/1991 Hutchins
4,994,983 A 2/1991 Landell et al.
5,001,774 A 3/1991 Lee
5,003,577 A 3/1991 Ertz et al.
5,007,095 A 4/1991 Nara et al.
5,007,098 A 4/1991 Kumagai
5,010,574 A 4/1991 Wang
5,016,002 A 5/1991 Levanto
5,020,112 A 5/1991 Chou
5,021,971 A 6/1991 Lindsay
5,022,081 A 6/1991 Hirose et al.
5,027,110 A 6/1991 Chang et al.
5,027,406 A 6/1991 Roberts et al.
5,027,408 A 6/1991 Kroeker et al.
5,029,211 A 7/1991 Ozawa
5,031,217 A 7/1991 Nishimura
5,032,989 A 7/1991 Tornetta
5,033,087 A 7/1991 Bahl et al.
5,040,218 A 8/1991 Vitale et al.
5,046,099 A 9/1991 Nishimura
5,047,614 A 9/1991 Bianco
5,047,617 A 9/1991 Shepard et al.
5,050,215 A 9/1991 Nishimura
5,053,758 A 10/1991 Cornett et al.
5,054,084 A 10/1991 Tanaka et al.
5,057,915 A 10/1991 Von Kohorn
5,062,143 A 10/1991 Schmitt
5,067,158 A 11/1991 Arjmand
5,067,503 A 11/1991 Stile
5,072,452 A 12/1991 Brown et al.
5,075,896 A 12/1991 Wilcox et al.
5,079,723 A 1/1992 Herceg et al.
5,083,119 A 1/1992 Trevett et al.
5,083,268 A 1/1992 Hemphill et al.
5,086,792 A 2/1992 Chodorow
5,090,012 A 2/1992 Kajiyama et al.

(56) **References Cited**

U.S. PATENT DOCUMENTS

5,091,790	A	2/1992	Silverberg
5,091,945	A	2/1992	Kleijn
5,103,498	A	4/1992	Lanier et al.
5,109,509	A	4/1992	Katayama et al.
5,111,423	A	5/1992	Kopec, Jr. et al.
5,119,079	A	6/1992	Hube et al.
5,122,951	A	6/1992	Kamiya
5,123,103	A	6/1992	Ohtaki et al.
5,125,022	A	6/1992	Hunt et al.
5,125,030	A	6/1992	Nomura et al.
5,127,043	A	6/1992	Hunt et al.
5,127,053	A	6/1992	Koch
5,127,055	A	6/1992	Larkey
5,128,672	A	7/1992	Kaehler
5,133,011	A	7/1992	McKiel, Jr.
5,133,023	A	7/1992	Bokser
5,142,584	A	8/1992	Ozawa
5,144,875	A	9/1992	Nakada
5,148,541	A	9/1992	Lee et al.
5,153,913	A	10/1992	Kandefer et al.
5,157,610	A	10/1992	Asano et al.
5,157,779	A	10/1992	Washburn et al.
5,161,102	A	11/1992	Griffin et al.
5,163,809	A	11/1992	Akgun et al.
5,164,900	A	11/1992	Bernath
5,164,982	A	11/1992	Davis
5,165,007	A	11/1992	Bahl et al.
5,167,004	A	11/1992	Netsch et al.
5,175,536	A	12/1992	Aschliman et al.
5,175,803	A	12/1992	Yeh
5,175,814	A	12/1992	Anick et al.
5,179,627	A	1/1993	Sweet et al.
5,179,652	A	1/1993	Rozmanith et al.
5,194,950	A	3/1993	Murakarni et al.
5,195,034	A	3/1993	Garneau et al.
5,195,167	A	3/1993	Bahl et al.
5,197,005	A	3/1993	Shwartz et al.
5,199,077	A	3/1993	Wilcox et al.
5,201,034	A	4/1993	Matsuura et al.
5,202,952	A	4/1993	Gillick et al.
5,208,862	A	5/1993	Ozawa
5,210,689	A	5/1993	Baker et al.
5,212,638	A	5/1993	Bernath
5,212,821	A	5/1993	Gorin et al.
5,216,747	A	6/1993	Hardwick et al.
5,218,700	A	6/1993	Beechick
5,220,629	A	6/1993	Kosaka et al.
5,220,639	A	6/1993	Lee
5,220,657	A	6/1993	Bly et al.
5,222,146	A	6/1993	Bahl et al.
5,230,036	A	7/1993	Akamine et al.
5,231,670	A	7/1993	Goldhor et al.
5,235,680	A	8/1993	Bijnagte
5,237,502	A	8/1993	White et al.
5,241,619	A	8/1993	Schwartz et al.
5,252,951	A	10/1993	Tannenbaum et al.
5,253,325	A	10/1993	Clark
5,255,386	A	10/1993	Prager
5,257,387	A	10/1993	Richek et al.
5,260,697	A	11/1993	Barrett et al.
5,266,931	A	11/1993	Tanaka
5,266,949	A	11/1993	Rossi
5,267,345	A	11/1993	Brown et al.
5,268,990	A	12/1993	Cohen et al.
5,274,771	A	12/1993	Hamilton et al.
5,274,818	A	12/1993	Vasilevsky et al.
5,276,616	A	1/1994	Kuga et al.
5,276,794	A	1/1994	Lamb, Jr.
5,278,980	A	1/1994	Pedersen et al.
5,282,265	A	1/1994	Rohra Suda et al.
5,283,818	A	2/1994	Klausner et al.
5,287,448	A	2/1994	Nicol et al.
5,289,562	A	2/1994	Mizuta et al.
RE34,562	E	3/1994	Murakami et al.
5,291,286	A	3/1994	Murakami et al.
5,293,254	A	3/1994	Eschbach
5,293,448	A	3/1994	Honda
5,293,452	A	3/1994	Picone et al.
5,296,642	A	3/1994	Konishi
5,297,170	A	3/1994	Eyuboglu et al.
5,297,194	A	3/1994	Hunt et al.
5,299,125	A	3/1994	Baker et al.
5,299,284	A	3/1994	Roy
5,301,109	A	4/1994	Landauer et al.
5,303,406	A	4/1994	Hansen et al.
5,305,205	A	4/1994	Weber et al.
5,305,421	A	4/1994	Li et al.
5,305,768	A	4/1994	Gross et al.
5,309,359	A	5/1994	Katz et al.
5,315,689	A	5/1994	Kanazawa et al.
5,317,507	A	5/1994	Gallant
5,317,647	A	5/1994	Pagallo
5,325,297	A	6/1994	Bird et al.
5,325,298	A	6/1994	Gallant
5,325,462	A	6/1994	Farrett
5,326,270	A	7/1994	Ostby et al.
5,327,342	A	7/1994	Roy
5,327,498	A	7/1994	Hamon
5,329,608	A	7/1994	Bocchieri et al.
5,333,236	A	7/1994	Bahl et al.
5,333,266	A	7/1994	Boaz et al.
5,333,275	A	7/1994	Wheatley et al.
5,335,011	A	8/1994	Addeo et al.
5,335,276	A	8/1994	Thompson et al.
5,341,293	A	8/1994	Vertelney et al.
5,341,466	A	8/1994	Perlin et al.
5,345,536	A	9/1994	Hoshimi et al.
5,349,645	A	9/1994	Zhao
5,353,374	A	10/1994	Wilson et al.
5,353,376	A	10/1994	Oh et al.
5,353,377	A	10/1994	Kuroda et al.
5,353,408	A	10/1994	Kato et al.
5,353,432	A	10/1994	Richek et al.
5,357,431	A	10/1994	Nakada et al.
5,367,640	A	11/1994	Hamilton et al.
5,369,575	A	11/1994	Lamberti et al.
5,369,577	A	11/1994	Kadashevich et al.
5,371,853	A	12/1994	Kao et al.
5,371,901	A	12/1994	Reed et al.
5,373,566	A	12/1994	Murdock
5,377,103	A	12/1994	Lamberti et al.
5,377,301	A	12/1994	Rosenberg et al.
5,377,303	A	12/1994	Firman
5,384,671	A	1/1995	Fisher
5,384,892	A	1/1995	Strong
5,384,893	A	1/1995	Hutchins
5,386,494	A	1/1995	White
5,386,556	A	1/1995	Hedin et al.
5,390,236	A	2/1995	Klausner et al.
5,390,279	A	2/1995	Strong
5,390,281	A	2/1995	Luciw et al.
5,392,419	A	2/1995	Walton
5,396,625	A	3/1995	Parkes
5,400,434	A	3/1995	Pearson
5,404,295	A	4/1995	Katz et al.
5,406,305	A	4/1995	Shimomura et al.
5,408,060	A	4/1995	Muurinen
5,412,756	A	5/1995	Bauman et al.
5,412,804	A	5/1995	Krishna
5,412,806	A	5/1995	Du et al.
5,418,951	A	5/1995	Damashek
5,422,656	A	6/1995	Allard et al.
5,424,947	A	6/1995	Nagao et al.
5,425,108	A	6/1995	Hwang et al.
5,428,731	A	6/1995	Powers, III
5,434,777	A	7/1995	Luciw
5,440,615	A	8/1995	Caccuro et al.
5,442,598	A	8/1995	Haikawa et al.
5,442,780	A	8/1995	Takanashi et al.
5,444,823	A	8/1995	Nguyen
5,449,368	A	9/1995	Kuzmak
5,450,523	A	9/1995	Zhao
5,455,888	A	10/1995	Iyengar et al.
5,457,768	A	10/1995	Tsuboi et al.

(56) **References Cited**

U.S. PATENT DOCUMENTS

5,459,488 A 10/1995 Geiser
5,463,696 A 10/1995 Beernink et al.
5,463,725 A 10/1995 Henckel et al.
5,465,401 A 11/1995 Thompson
5,469,529 A 11/1995 Bimbot et al.
5,471,611 A 11/1995 McGregor
4,555,775 A 12/1995 Pike
5,473,728 A 12/1995 Luginbuhl et al.
5,475,587 A 12/1995 Anick et al.
5,475,796 A 12/1995 Iwata
5,477,447 A 12/1995 Luciw et al.
5,477,448 A 12/1995 Golding et al.
5,477,451 A 12/1995 Brown et al.
5,479,488 A 12/1995 Lennig et al.
5,481,739 A 1/1996 Staats
5,483,261 A 1/1996 Yasutake
5,485,372 A 1/1996 Golding et al.
5,485,543 A 1/1996 Aso
5,488,204 A 1/1996 Mead et al.
5,488,727 A 1/1996 Agrawal et al.
5,490,234 A 2/1996 Narayan
5,491,758 A 2/1996 Bellegarda et al.
5,491,772 A 2/1996 Hardwick et al.
5,493,677 A 2/1996 Balogh et al.
5,495,604 A 2/1996 Harding et al.
5,497,319 A 3/1996 Chong et al.
5,500,903 A 3/1996 Gulli
5,500,905 A 3/1996 Martin et al.
5,500,937 A 3/1996 Thompson-Rohrlich
5,502,774 A 3/1996 Bellegarda et al.
5,502,790 A 3/1996 Yi
5,502,791 A 3/1996 Nishimura et al.
5,515,475 A 5/1996 Gupta et al.
5,521,816 A 5/1996 Roche et al.
5,524,140 A 6/1996 Klausner et al.
5,530,861 A 6/1996 Diamant et al.
5,533,182 A 7/1996 Bates et al.
5,535,121 A 7/1996 Roche et al.
5,536,902 A 7/1996 Serra et al.
5,537,317 A 7/1996 Schabes et al.
5,537,618 A 7/1996 Boulton et al.
5,537,647 A 7/1996 Hermansky et al.
5,543,588 A 8/1996 Bisset et al.
5,543,897 A 8/1996 Altrieth, III
5,544,264 A 8/1996 Bellegarda et al.
5,548,507 A 8/1996 Martino et al.
5,555,343 A 9/1996 Luther
5,555,344 A 9/1996 Zunkler
5,559,301 A 9/1996 Bryan, Jr. et al.
5,559,945 A 9/1996 Beaudet et al.
5,564,446 A 10/1996 Wiltshire
5,565,888 A 10/1996 Selker
5,568,536 A 10/1996 Tiller et al.
5,568,540 A 10/1996 Greco et al.
5,570,324 A 10/1996 Geil
5,572,576 A 11/1996 Klausner et al.
5,574,823 A 11/1996 Hassanein et al.
5,574,824 A 11/1996 Slyh et al.
5,577,135 A 11/1996 Grajski et al.
5,577,164 A 11/1996 Kaneko et al.
5,577,241 A 11/1996 Spencer
5,578,808 A 11/1996 Taylor
5,579,037 A 11/1996 Tahara et al.
5,579,436 A 11/1996 Chou et al.
5,581,484 A 12/1996 Prince
5,581,652 A 12/1996 Abe et al.
5,581,655 A 12/1996 Cohen et al.
5,583,993 A 12/1996 Foster et al.
5,584,024 A 12/1996 Shwartz
5,586,540 A 12/1996 Marzec et al.
5,594,641 A 1/1997 Kaplan et al.
5,596,260 A 1/1997 Moravec et al.
5,596,676 A 1/1997 Swaminathan et al.
5,596,994 A 1/1997 Bro
5,608,624 A 3/1997 Luciw
5,608,698 A 3/1997 Yamanoi et al.
5,608,841 A 3/1997 Tsuboka
5,610,812 A 3/1997 Schabes et al.
5,613,036 A 3/1997 Strong
5,613,122 A 3/1997 Burnard et al.
5,615,378 A 3/1997 Nishino et al.
5,615,384 A 3/1997 Allard et al.
5,616,876 A 4/1997 Cluts
5,617,386 A 4/1997 Choi
5,617,507 A 4/1997 Lee et al.
5,617,539 A 4/1997 Ludwig et al.
5,619,583 A 4/1997 Page et al.
5,619,694 A 4/1997 Shimazu
5,621,859 A 4/1997 Schwartz et al.
5,621,903 A 4/1997 Luciw et al.
5,627,939 A 5/1997 Huang et al.
5,634,084 A 5/1997 Malsheen et al.
5,636,325 A 6/1997 Farrett
5,638,425 A 6/1997 Meador, III et al.
5,638,489 A 6/1997 Tsuboka
5,638,523 A 6/1997 Mullet et al.
5,640,487 A 6/1997 Lau et al.
5,642,464 A 6/1997 Yue et al.
5,642,466 A 6/1997 Narayan
5,642,519 A 6/1997 Martin
5,644,656 A 7/1997 Akra et al.
5,644,727 A 7/1997 Atkins
5,644,735 A 7/1997 Luciw et al.
5,649,060 A 7/1997 Ellozy et al.
5,652,828 A 7/1997 Silverman
5,652,884 A 7/1997 Palevich
5,652,897 A 7/1997 Linebarger et al.
5,661,787 A 8/1997 Pocock
5,664,055 A 9/1997 Kroon
5,664,206 A 9/1997 Murow et al.
5,670,985 A 9/1997 Cappels, Sr. et al.
5,675,704 A 10/1997 Juang et al.
5,675,819 A 10/1997 Schuetze
5,678,039 A 10/1997 Hinks et al.
5,678,053 A 10/1997 Anderson
5,682,475 A 10/1997 Johnson et al.
5,682,539 A 10/1997 Conrad et al.
5,684,513 A 11/1997 Decker
5,687,077 A 11/1997 Gough, Jr.
5,689,287 A 11/1997 Mackinlay et al.
5,689,616 A 11/1997 Li
5,689,618 A 11/1997 Gasper et al.
5,692,205 A 11/1997 Berry et al.
5,696,962 A 12/1997 Kupiec
5,697,793 A 12/1997 Huffman et al.
5,699,082 A 12/1997 Marks et al.
5,701,400 A 12/1997 Amado
5,706,442 A 1/1998 Anderson et al.
5,708,659 A 1/1998 Rostoker et al.
5,708,822 A 1/1998 Wical
5,710,886 A 1/1998 Christensen et al.
5,710,922 A 1/1998 Alley et al.
5,712,949 A 1/1998 Kato et al.
5,712,957 A 1/1998 Waibel et al.
5,715,468 A 2/1998 Budzinski
5,717,877 A 2/1998 Orton et al.
5,721,827 A 2/1998 Logan et al.
5,721,949 A 2/1998 Smith et al.
5,724,406 A 3/1998 Juster
5,724,985 A 3/1998 Snell et al.
5,726,672 A 3/1998 Hernandez et al.
5,727,950 A 3/1998 Cook et al.
5,729,694 A 3/1998 Holzrichter et al.
5,729,704 A 3/1998 Stone et al.
5,732,216 A 3/1998 Logan et al.
5,732,390 A 3/1998 Katayanagi et al.
5,732,395 A 3/1998 Silverman
5,734,750 A 3/1998 Arai et al.
5,734,791 A 3/1998 Acero et al.
5,736,974 A 4/1998 Selker
5,737,487 A 4/1998 Bellegarda et al.
5,737,609 A 4/1998 Reed et al.
5,737,734 A 4/1998 Schultz
5,739,451 A 4/1998 Winksy et al.

(56) **References Cited**

U.S. PATENT DOCUMENTS

5,740,143 A 4/1998 Suetomi
5,742,705 A 4/1998 Parthasarathy
5,742,736 A 4/1998 Haddock
5,745,116 A 4/1998 Pisutha-Arnond
5,745,843 A 4/1998 Wetters et al.
5,745,873 A 4/1998 Braida et al.
5,748,512 A 5/1998 Vargas
5,748,974 A 5/1998 Johnson
5,749,071 A 5/1998 Silverman
5,749,081 A 5/1998 Whiteis
5,751,906 A 5/1998 Silverman
5,757,358 A 5/1998 Osga
5,757,979 A 5/1998 Hongo et al.
5,758,024 A 5/1998 Alleva
5,758,079 A 5/1998 Ludwig et al.
5,758,083 A 5/1998 Singh et al.
5,758,314 A 5/1998 McKenna
5,758,318 A 5/1998 Kojima et al.
5,759,101 A 6/1998 Von Kohorn
5,761,640 A 6/1998 Kalyanswamy et al.
5,761,687 A 6/1998 Hon et al.
5,764,852 A 6/1998 Williams
5,765,131 A 6/1998 Stentiford et al.
5,765,168 A 6/1998 Burrows
5,771,276 A 6/1998 Wolf
5,774,834 A 6/1998 Visser
5,774,855 A 6/1998 Foti et al.
5,774,859 A 6/1998 Houser et al.
5,777,614 A 7/1998 Ando et al.
5,778,405 A 7/1998 Ogawa
5,790,978 A 8/1998 Olive et al.
5,794,050 A 8/1998 Dahlgren et al.
5,794,182 A 8/1998 Manduchi et al.
5,794,207 A 8/1998 Walker et al.
5,794,237 A 8/1998 Gore, Jr.
5,797,008 A 8/1998 Burrows
5,799,268 A 8/1998 Boguraev
5,799,269 A 8/1998 Schabes et al.
5,799,276 A 8/1998 Komissarchik et al.
5,799,279 A 8/1998 Gould et al.
5,801,692 A 9/1998 Muzio et al.
5,802,466 A 9/1998 Gallant et al.
5,802,526 A 9/1998 Fawcett et al.
5,806,021 A 9/1998 Chen et al.
5,812,697 A 9/1998 Sakai et al.
5,812,698 A 9/1998 Platt et al.
5,815,142 A 9/1998 Allard et al.
5,815,225 A 9/1998 Nelson
5,818,142 A 10/1998 Edleblute et al.
5,818,451 A 10/1998 Bertram et al.
5,818,924 A 10/1998 King et al.
5,822,288 A 10/1998 Shinada
5,822,720 A 10/1998 Bookman et al.
5,822,730 A 10/1998 Roth et al.
5,822,743 A 10/1998 Gupta et al.
5,825,349 A 10/1998 Meier et al.
5,825,352 A 10/1998 Bisset et al.
5,825,881 A 10/1998 Colvin, Sr.
5,826,261 A 10/1998 Spencer
5,828,768 A 10/1998 Eatwell et al.
5,828,999 A 10/1998 Bellegarda et al.
5,832,428 A 11/1998 Chow et al.
5,832,433 A 11/1998 Yashchin et al.
5,832,435 A 11/1998 Silverman
5,833,134 A 11/1998 Ho et al.
5,835,077 A 11/1998 Dao et al.
5,835,079 A 11/1998 Shieh
5,835,721 A 11/1998 Donahue et al.
5,835,732 A 11/1998 Kikinis et al.
5,835,893 A 11/1998 Ushioda
5,839,106 A 11/1998 Bellegarda
5,841,902 A 11/1998 Tu
5,842,165 A 11/1998 Raman et al.
5,845,255 A 12/1998 Mayaud
5,848,410 A 12/1998 Walls et al.
5,850,480 A 12/1998 Scanlon
5,850,629 A 12/1998 Holm et al.
5,852,801 A 12/1998 Hon et al.
5,854,893 A 12/1998 Ludwig et al.
5,855,000 A 12/1998 Waibel et al.
5,857,184 A 1/1999 Lynch
5,859,636 A 1/1999 Pandit
5,860,063 A 1/1999 Gorin et al.
5,860,064 A 1/1999 Henton
5,860,075 A 1/1999 Hashizume et al.
5,862,223 A 1/1999 Walker et al.
5,862,233 A 1/1999 Poletti
5,864,806 A 1/1999 Mokbel et al.
5,864,815 A 1/1999 Rozak et al.
5,864,844 A 1/1999 James et al.
5,864,855 A 1/1999 Ruocco et al.
5,864,868 A 1/1999 Contois
5,867,799 A 2/1999 Lang et al.
5,870,710 A 2/1999 Ozawa et al.
5,873,056 A 2/1999 Liddy et al.
5,873,064 A 2/1999 De Armas et al.
5,875,427 A 2/1999 Yamazaki
5,875,429 A 2/1999 Douglas
5,875,437 A 2/1999 Atkins
5,876,396 A 3/1999 Lo et al.
5,877,751 A 3/1999 Kanemitsu et al.
5,877,757 A 3/1999 Baldwin et al.
5,878,393 A 3/1999 Hata et al.
5,878,394 A 3/1999 Muhling
5,878,396 A 3/1999 Henton
5,880,411 A 3/1999 Gillespie et al.
5,880,731 A 3/1999 Liles et al.
5,884,039 A 3/1999 Ludwig et al.
5,884,323 A 3/1999 Hawkins et al.
5,890,117 A 3/1999 Silverman
5,890,122 A 3/1999 Van et al.
5,891,180 A 4/1999 Greeninger et al.
5,893,126 A 4/1999 Drews et al.
5,893,132 A 4/1999 Huffman et al.
5,895,448 A 4/1999 Vysotsky et al.
5,895,464 A 4/1999 Bhandari et al.
5,895,466 A 4/1999 Goldberg et al.
5,896,321 A 4/1999 Miller et al.
5,896,500 A 4/1999 Ludwig et al.
5,899,972 A 5/1999 Miyazawa et al.
5,905,498 A 5/1999 Diament et al.
5,907,597 A 5/1999 Mark
5,909,666 A 6/1999 Gould et al.
5,912,951 A 6/1999 Checchio et al.
5,912,952 A 6/1999 Brendzel
5,913,185 A 6/1999 Martino et al.
5,913,193 A 6/1999 Huang et al.
5,915,001 A 6/1999 Uppaluru et al.
5,915,236 A 6/1999 Gould et al.
5,915,238 A 6/1999 Tjaden
5,915,249 A 6/1999 Spencer
5,917,487 A 6/1999 Ulrich
5,918,303 A 6/1999 Yamaura et al.
5,920,327 A 7/1999 Seidensticker, Jr.
5,920,836 A 7/1999 Gould et al.
5,920,837 A 7/1999 Gould et al.
5,923,757 A 7/1999 Hocker et al.
5,924,068 A 7/1999 Richard et al.
5,926,769 A 7/1999 Valimaa et al.
5,926,789 A 7/1999 Barbara et al.
5,930,408 A 7/1999 Seto
5,930,751 A 7/1999 Cohrs et al.
5,930,754 A 7/1999 Karaali et al.
5,930,769 A 7/1999 Rose
5,930,783 A 7/1999 Li et al.
5,933,477 A 8/1999 Wu
5,933,806 A 8/1999 Beyerlein et al.
5,933,822 A 8/1999 Braden-Harder et al.
5,936,926 A 8/1999 Yokouchi et al.
5,937,163 A 8/1999 Lee et al.
5,940,811 A 8/1999 Norris
5,940,841 A 8/1999 Schmuck et al.
5,941,944 A 8/1999 Messerly
5,943,043 A 8/1999 Furuhata et al.

(56) **References Cited**

U.S. PATENT DOCUMENTS

5,943,049 A 8/1999 Matsubara et al.
5,943,052 A 8/1999 Allen et al.
5,943,429 A 8/1999 Haendel et al.
5,943,443 A 8/1999 Itonori et al.
5,943,670 A 8/1999 Prager
5,946,647 A 8/1999 Miller et al.
5,946,648 A 8/1999 Halstead et al.
5,948,040 A 9/1999 DeLorme et al.
5,949,961 A 9/1999 Sharman
5,950,123 A 9/1999 Schwelb et al.
5,952,992 A 9/1999 Helms
5,953,541 A 9/1999 King et al.
5,956,021 A 9/1999 Kubota et al.
5,956,699 A 9/1999 Wong et al.
5,960,385 A 9/1999 Skiena et al.
5,960,394 A 9/1999 Gould et al.
5,960,422 A 9/1999 Prasad
5,963,208 A 10/1999 Dolan et al.
5,963,924 A 10/1999 Williams et al.
5,963,964 A 10/1999 Nielsen
5,966,126 A 10/1999 Szabo
5,970,446 A 10/1999 Goldberg et al.
5,970,474 A 10/1999 LeRoy et al.
5,973,612 A 10/1999 Deo et al.
5,973,676 A 10/1999 Kawakura
5,974,146 A 10/1999 Randle et al.
5,977,950 A 11/1999 Rhyne
5,982,352 A 11/1999 Pryor
5,982,370 A 11/1999 Kamper
5,982,891 A 11/1999 Ginter et al.
5,982,902 A 11/1999 Terano
5,983,179 A 11/1999 Gould et al.
5,983,184 A 11/1999 Noguchi
5,983,216 A 11/1999 Kirsch et al.
5,987,132 A 11/1999 Rowney
5,987,140 A 11/1999 Rowney et al.
5,987,401 A 11/1999 Trudeau
5,987,404 A 11/1999 Della Pietra et al.
5,987,440 A 11/1999 O'Neil et al.
5,990,887 A 11/1999 Redpath et al.
5,991,441 A 11/1999 Jourjine
5,995,460 A 11/1999 Takagi et al.
5,995,590 A 11/1999 Brunet et al.
5,995,918 A 11/1999 Kendall et al.
5,998,972 A 12/1999 Gong
5,999,169 A 12/1999 Lee
5,999,895 A 12/1999 Forest
5,999,908 A 12/1999 Abelow
5,999,927 A 12/1999 Tukey et al.
6,005,495 A 12/1999 Connolly et al.
6,006,274 A 12/1999 Hawkins et al.
6,009,237 A 12/1999 Hirabayashi et al.
6,011,585 A 1/2000 Anderson
6,014,428 A 1/2000 Wolf
6,016,471 A 1/2000 Kuhn et al.
6,017,219 A 1/2000 Adams, Jr. et al.
6,018,705 A 1/2000 Gaudet
6,018,711 A 1/2000 French-St. George et al.
6,020,881 A 2/2000 Naughton et al.
6,023,536 A 2/2000 Visser
6,023,676 A 2/2000 Erell
6,023,684 A 2/2000 Pearson
6,024,288 A 2/2000 Gottlich et al.
6,026,345 A 2/2000 Shah et al.
6,026,375 A 2/2000 Hall et al.
6,026,388 A 2/2000 Liddy et al.
6,026,393 A 2/2000 Gupta et al.
6,029,132 A 2/2000 Kuhn et al.
6,029,135 A 2/2000 Krasle
6,035,267 A 3/2000 Watanabe et al.
6,035,303 A 3/2000 Baer et al.
6,035,336 A 3/2000 Lu et al.
6,038,533 A 3/2000 Buchsbaum et al.
6,040,824 A 3/2000 Maekawa et al.
6,041,023 A 3/2000 Lakhansingh
6,047,255 A 4/2000 Williamson
6,047,300 A 4/2000 Walfish et al.
6,052,654 A 4/2000 Gaudet et al.
6,052,656 A 4/2000 Suda et al.
6,054,990 A 4/2000 Tran
6,055,514 A 4/2000 Wren
6,055,531 A 4/2000 Bennett et al.
6,061,646 A 5/2000 Martino et al.
6,064,767 A 5/2000 Muir et al.
6,064,951 A 5/2000 Park et al.
6,064,959 A 5/2000 Young et al.
6,064,960 A 5/2000 Bellegarda et al.
6,064,963 A 5/2000 Gainsboro
6,067,519 A 5/2000 Lowry
6,069,648 A 5/2000 Suso et al.
6,070,138 A 5/2000 Iwata
6,070,139 A 5/2000 Miyazawa et al.
6,070,140 A 5/2000 Tran
6,070,147 A 5/2000 Harms et al.
6,073,033 A 6/2000 Campo
6,073,036 A 6/2000 Heikkinen et al.
6,073,091 A 6/2000 Kanevsky et al.
6,073,097 A 6/2000 Gould et al.
6,076,051 A 6/2000 Messerly et al.
6,076,060 A 6/2000 Lin et al.
6,076,088 A 6/2000 Paik et al.
6,078,885 A 6/2000 Beutnagel
6,078,914 A 6/2000 Redfern
6,081,750 A 6/2000 Hoffberg et al.
6,081,774 A 6/2000 de Hita et al.
6,081,780 A 6/2000 Lumelsky
6,085,204 A 7/2000 Chijiwa et al.
6,088,671 A 7/2000 Gould et al.
6,088,731 A 7/2000 Kiraly et al.
6,092,036 A 7/2000 Hamann et al.
6,092,038 A 7/2000 Kanevsky et al.
6,092,043 A 7/2000 Squires et al.
6,094,649 A 7/2000 Bowen et al.
6,097,391 A 8/2000 Wilcox
6,101,468 A 8/2000 Gould et al.
6,101,470 A 8/2000 Eide et al.
6,105,865 A 8/2000 Hardesty
6,108,627 A 8/2000 Sabourin
6,108,640 A 8/2000 Slotznick
6,111,562 A 8/2000 Downs et al.
6,111,572 A 8/2000 Blair et al.
6,115,686 A 9/2000 Chung et al.
6,116,907 A 9/2000 Baker et al.
6,119,101 A 9/2000 Peckover
6,121,960 A 9/2000 Carroll et al.
6,122,340 A 9/2000 Darley et al.
6,122,614 A 9/2000 Kahn et al.
6,122,616 A 9/2000 Henton
6,122,647 A 9/2000 Horowitz et al.
6,125,284 A 9/2000 Moore et al.
6,125,346 A 9/2000 Nishimura et al.
6,125,356 A 9/2000 Brockman et al.
6,129,582 A 10/2000 Wilhite et al.
6,138,098 A 10/2000 Shieber et al.
6,138,158 A 10/2000 Boyle et al.
6,141,642 A 10/2000 Oh
6,141,644 A 10/2000 Kuhn et al.
6,144,377 A 11/2000 Oppermann et al.
6,144,380 A 11/2000 Shwarts et al.
6,144,938 A 11/2000 Surace et al.
6,144,939 A 11/2000 Pearson et al.
6,151,401 A 11/2000 Annaratone
6,154,551 A 11/2000 Frenkel
6,154,720 A 11/2000 Onishi et al.
6,157,935 A 12/2000 Tran et al.
6,161,084 A 12/2000 Messerly et al.
6,161,087 A 12/2000 Wightman et al.
6,161,944 A 12/2000 Leman
6,163,769 A 12/2000 Acero et al.
6,163,809 A 12/2000 Buckley
6,167,369 A 12/2000 Schulze
6,169,538 B1 1/2001 Nowlan et al.
6,172,948 B1 1/2001 Keller et al.
6,173,194 B1 1/2001 Vanttila

(56) **References Cited**

U.S. PATENT DOCUMENTS

6,173,251 B1 1/2001 Ito et al.
6,173,261 B1 1/2001 Arai et al.
6,173,263 B1 1/2001 Conkie
6,173,279 B1 1/2001 Levin et al.
6,177,905 B1 1/2001 Welch
6,177,931 B1 1/2001 Alexander et al.
6,179,432 B1 1/2001 Zhang et al.
6,182,028 B1 1/2001 Karaali et al.
6,182,099 B1 1/2001 Nakasato
6,185,533 B1 2/2001 Holm et al.
6,188,391 B1 2/2001 Seely et al.
6,188,967 B1 2/2001 Kurtzberg et al.
6,188,999 B1 2/2001 Moody
6,191,939 B1 2/2001 Burnett
6,192,253 B1 2/2001 Charlier et al.
6,192,340 B1 2/2001 Abecassis
6,195,641 B1 2/2001 Loring et al.
6,199,076 B1 3/2001 Logan et al.
6,205,456 B1 3/2001 Nakao
6,208,044 B1 3/2001 Viswanadham et al.
6,208,932 B1 3/2001 Ohmura et al.
6,208,956 B1 3/2001 Motoyama
6,208,964 B1 3/2001 Sabourin
6,208,967 B1 3/2001 Pauws et al.
6,208,971 B1 3/2001 Bellegarda et al.
6,212,564 B1 4/2001 Harter et al.
6,216,102 B1 4/2001 Martino et al.
6,216,131 B1 4/2001 Liu et al.
6,217,183 B1 4/2001 Shipman
6,222,347 B1 4/2001 Gong
6,226,403 B1 5/2001 Parthasarathy
6,226,533 B1 5/2001 Akahane
6,226,614 B1 5/2001 Mizuno et al.
6,226,655 B1 5/2001 Borman et al.
6,230,322 B1 5/2001 Saib et al.
6,232,539 B1 5/2001 Looney et al.
6,232,966 B1 5/2001 Kurlander
6,233,545 B1 5/2001 Datig
6,233,547 B1 5/2001 Denber et al.
6,233,559 B1 5/2001 Balakrishnan
6,233,578 B1 5/2001 Machihara et al.
6,237,025 B1 5/2001 Ludwig et al.
6,240,303 B1 5/2001 Katzur
6,243,681 B1 6/2001 Guji et al.
6,246,981 B1 6/2001 Papineni et al.
6,248,946 B1 6/2001 Dwek
6,249,606 B1 6/2001 Kiraly et al.
6,259,436 B1 7/2001 Moon et al.
6,259,826 B1 7/2001 Pollard et al.
6,260,011 B1 7/2001 Heckerman et al.
6,260,013 B1 7/2001 Sejnoha
6,260,016 B1 7/2001 Holm et al.
6,260,024 B1 7/2001 Shkedy
6,266,098 B1 7/2001 Cove et al.
6,266,637 B1 7/2001 Donovan et al.
6,268,859 B1 7/2001 Andresen et al.
6,269,712 B1 8/2001 Zentmyer
6,271,835 B1 8/2001 Hoeksma
6,272,456 B1 8/2001 De Campos
6,272,464 B1 8/2001 Kiraz et al.
6,275,795 B1 8/2001 Tzirkel-Hancock
6,275,824 B1 8/2001 O'Flaherty et al.
6,278,443 B1 8/2001 Amro et al.
6,278,970 B1 8/2001 Milner
6,282,507 B1 8/2001 Horiguchi et al.
6,282,511 B1 8/2001 Mayer
6,285,785 B1 9/2001 Bellegarda et al.
6,285,786 B1 9/2001 Seni et al.
6,289,085 B1 9/2001 Miyashita et al.
6,289,124 B1 9/2001 Okamoto
6,289,301 B1 9/2001 Higginbotham et al.
6,289,353 B1 9/2001 Hazlehurst et al.
6,292,772 B1 9/2001 Kantrowitz
6,292,778 B1 9/2001 Sukkar
6,295,390 B1 9/2001 Kobayashi et al.
6,295,541 B1 9/2001 Bodnar et al.
6,297,818 B1 10/2001 Ulrich et al.
6,298,314 B1 10/2001 Blackadar et al.
6,298,321 B1 10/2001 Karlov et al.
6,300,947 B1 10/2001 Kanevsky
6,304,844 B1 10/2001 Pan et al.
6,304,846 B1 10/2001 George et al.
6,307,548 B1 10/2001 Flinchem et al.
6,308,149 B1 10/2001 Gaussier et al.
6,310,610 B1 10/2001 Beaton et al.
6,311,152 B1 10/2001 Bai et al.
6,311,157 B1 10/2001 Strong
6,311,189 B1 10/2001 deVries et al.
6,317,237 B1 11/2001 Nakao et al.
6,317,594 B1 11/2001 Gossman et al.
6,317,707 B1 11/2001 Bangalore et al.
6,317,831 B1 11/2001 King
6,321,092 B1 11/2001 Fitch et al.
6,321,179 B1 11/2001 Glance et al.
6,323,846 B1 11/2001 Westerman et al.
6,324,499 B1 11/2001 Lewis et al.
6,324,502 B1 11/2001 Handel et al.
6,324,512 B1 11/2001 Junqua et al.
6,324,514 B2 11/2001 Matulich et al.
6,330,538 B1 12/2001 Breen
6,331,867 B1 12/2001 Eberhard et al.
6,332,175 B1 12/2001 Birrell et al.
6,334,103 B1 12/2001 Surace et al.
6,335,722 B1 1/2002 Tani et al.
6,336,365 B1 1/2002 Blackadar et al.
6,336,727 B1 1/2002 Kim
6,340,937 B1 1/2002 Stepita-Klauco
6,341,316 B1 1/2002 Kloba et al.
6,343,267 B1 1/2002 Kuhn et al.
6,345,240 B1 2/2002 Havens
6,345,250 B1 2/2002 Martin
6,351,522 B1 2/2002 Vitikainen
6,351,762 B1 2/2002 Ludwig et al.
6,353,442 B1 3/2002 Masui
6,353,794 B1 3/2002 Davis et al.
6,356,287 B1 3/2002 Ruberry et al.
6,356,854 B1 3/2002 Schubert et al.
6,356,864 B1 3/2002 Foltz et al.
6,356,905 B1 3/2002 Gershman et al.
6,357,147 B1 3/2002 Darley et al.
6,359,572 B1 3/2002 Vale
6,359,970 B1 3/2002 Burgess
6,360,227 B1 3/2002 Aggarwal et al.
6,360,237 B1 3/2002 Schulz et al.
6,363,348 B1 3/2002 Besling et al.
6,366,883 B1 4/2002 Campbell et al.
6,366,884 B1 4/2002 Bellegarda et al.
6,374,217 B1 4/2002 Bellegarda
6,374,226 B1 4/2002 Hunt et al.
6,377,530 B1 4/2002 Burrows
6,377,925 B1 4/2002 Greene, Jr. et al.
6,377,928 B1 4/2002 Saxena et al.
6,381,593 B1 4/2002 Yano et al.
6,385,586 B1 5/2002 Dietz
6,385,662 B1 5/2002 Moon et al.
6,389,114 B1 5/2002 Dowens et al.
6,397,183 B1 5/2002 Baba et al.
6,397,186 B1 5/2002 Bush et al.
6,400,806 B1 6/2002 Uppaluru
6,400,996 B1 6/2002 Hoffberg et al.
6,401,065 B1 6/2002 Kanevsky et al.
6,401,085 B1 6/2002 Gershman et al.
6,405,169 B1 6/2002 Kondo et al.
6,405,238 B1 6/2002 Votipka
6,408,272 B1 6/2002 White et al.
6,411,924 B1 6/2002 De Hita et al.
6,411,932 B1 6/2002 Molnar et al.
6,415,250 B1 7/2002 Van Den Akker
6,417,873 B1 7/2002 Fletcher et al.
6,418,431 B1 7/2002 Mahajan et al.
6,421,305 B1 7/2002 Gioscia et al.
6,421,672 B1 7/2002 McAllister et al.
6,421,707 B1 7/2002 Miller et al.
6,424,944 B1 7/2002 Hikawa

(56) **References Cited**

U.S. PATENT DOCUMENTS

6,430,531 B1 8/2002 Polish
6,430,551 B1 8/2002 Thelen et al.
6,434,522 B1 8/2002 Tsuboka
6,434,524 B1 8/2002 Weber
6,434,529 B1 8/2002 Walker et al.
6,434,604 B1 8/2002 Harada et al.
6,437,818 B1 8/2002 Ludwig et al.
6,438,523 B1 8/2002 Oberteuffer et al.
6,442,518 B1 8/2002 Van Thong et al.
6,442,523 B1 8/2002 Siegel
6,446,076 B1 9/2002 Burkey et al.
6,448,485 B1 9/2002 Barile
6,448,986 B1 9/2002 Smith
6,449,620 B1 9/2002 Draper et al.
6,453,281 B1 9/2002 Walters et al.
6,453,292 B2 9/2002 Ramaswamy et al.
6,453,312 B1 9/2002 Goiffon et al.
6,453,315 B1 9/2002 Weissman et al.
6,456,616 B1 9/2002 Rantanen
6,456,972 B1 9/2002 Gladstein et al.
6,460,015 B1 10/2002 Hetherington et al.
6,460,029 B1 10/2002 Fries et al.
6,462,778 B1 10/2002 Abram et al.
6,463,128 B1 10/2002 Elwin
6,463,413 B1 10/2002 Applebaum et al.
6,466,654 B1 10/2002 Cooper et al.
6,467,924 B2 10/2002 Shipman
6,469,712 B1 10/2002 Hilpert, Jr. et al.
6,469,722 B1 10/2002 Kinoe et al.
6,469,732 B1 10/2002 Chang et al.
6,470,347 B1 10/2002 Gillam
6,473,630 B1 10/2002 Baranowski et al.
6,473,754 B1 10/2002 Matsubayashi et al.
6,477,488 B1 11/2002 Bellegarda
6,477,494 B2 11/2002 Hyde-Thomson et al.
6,487,533 B2 11/2002 Hyde-Thomson et al.
6,487,534 B1 11/2002 Thelen et al.
6,487,663 B1 11/2002 Jaisimha et al.
6,489,951 B1 12/2002 Wong et al.
6,490,547 B1 12/2002 Atkin et al.
6,490,560 B1 12/2002 Ramaswamy et al.
6,493,006 B1 12/2002 Gourdol et al.
6,493,428 B1 12/2002 Hillier
6,493,652 B1 12/2002 Ohlenbusch et al.
6,493,667 B1 12/2002 De Souza et al.
6,499,013 B1 12/2002 Weber
6,499,014 B1 12/2002 Chihara
6,499,016 B1 12/2002 Anderson et al.
6,501,937 B1 12/2002 Ho et al.
6,502,194 B1 12/2002 Berman et al.
6,505,158 B1 1/2003 Conkie
6,505,175 B1 1/2003 Silverman et al.
6,505,183 B1 1/2003 Loofbourrow et al.
6,507,829 B1 1/2003 Richards et al.
6,510,406 B1 1/2003 Marchisio
6,510,412 B1 1/2003 Sasai et al.
6,510,417 B1 1/2003 Woods et al.
6,513,006 B2 1/2003 Howard et al.
6,513,008 B2 1/2003 Pearson et al.
6,513,063 B1 1/2003 Julia et al.
6,519,565 B1 2/2003 Clements et al.
6,519,566 B1 2/2003 Boyer et al.
6,523,026 B1 2/2003 Gillis
6,523,061 B1 2/2003 Halverson et al.
6,523,172 B1 2/2003 Martinez-Guerra et al.
6,526,351 B2 2/2003 Whitham
6,526,382 B1 2/2003 Yuschik
6,526,395 B1 2/2003 Morris
6,529,592 B1 3/2003 Khan
6,529,608 B2 3/2003 Gersabeck et al.
6,532,444 B1 3/2003 Weber
6,532,446 B1 3/2003 King
6,535,610 B1 3/2003 Stewart
6,535,852 B2 3/2003 Eide
6,535,983 B1 3/2003 McCormack et al.
6,536,139 B2 3/2003 Darley et al.
6,538,665 B2 3/2003 Crow et al.
6,542,171 B1 4/2003 Satou et al.
6,542,584 B1 4/2003 Sherwood et al.
6,542,868 B1 4/2003 Badt et al.
6,546,262 B1 4/2003 Freadman
6,546,367 B2 4/2003 Otsuka
6,546,388 B1 4/2003 Edlund et al.
6,549,497 B2 4/2003 Miyamoto et al.
6,553,343 B1 4/2003 Kagoshima et al.
6,553,344 B2 4/2003 Bellegarda et al.
6,556,971 B1 4/2003 Rigsby et al.
6,556,983 B1 4/2003 Altschuler et al.
6,560,903 B1 5/2003 Darley
6,563,769 B1 5/2003 Van Der Meulen
6,564,186 B1 5/2003 Kiraly et al.
6,567,549 B1 5/2003 Marianetti et al.
6,570,557 B1 5/2003 Westerman et al.
6,570,596 B2 5/2003 Frederiksen
6,582,342 B2 6/2003 Kaufman
6,583,806 B2 6/2003 Ludwig et al.
6,584,464 B1 6/2003 Warthen
6,587,403 B1 7/2003 Keller et al.
6,587,404 B1 7/2003 Keller et al.
6,590,303 B1 7/2003 Austin et al.
6,591,379 B1 7/2003 LeVine et al.
6,594,673 B1 7/2003 Smith et al.
6,594,688 B2 7/2003 Ludwig et al.
6,597,345 B2 7/2003 Hirshberg
6,598,021 B1 7/2003 Shambaugh et al.
6,598,022 B2 7/2003 Yuschik
6,598,039 B1 7/2003 Livowsky
6,598,054 B2 7/2003 Schuetze et al.
6,601,026 B2 7/2003 Appelt et al.
6,601,234 B1 7/2003 Bowman-Amuah
6,603,837 B1 8/2003 Kesanupalli et al.
6,604,059 B2 8/2003 Strubbe et al.
6,606,101 B1 8/2003 Malamud et al.
6,606,388 B1 8/2003 Townsend et al.
6,606,632 B1 8/2003 Saulpaugh et al.
6,611,789 B1 8/2003 Darley
6,615,172 B1 9/2003 Bennett et al.
6,615,175 B1 9/2003 Gazdzinski
6,615,176 B2 9/2003 Lewis et al.
6,615,220 B1 9/2003 Austin et al.
6,621,768 B1 9/2003 Keller et al.
6,621,892 B1 9/2003 Banister et al.
6,622,121 B1 9/2003 Crepy et al.
6,622,136 B2 9/2003 Russell
6,623,529 B1 9/2003 Lakritz
6,625,583 B1 9/2003 Silverman et al.
6,628,808 B1 9/2003 Bach et al.
6,631,186 B1 10/2003 Adams et al.
6,631,346 B1 10/2003 Karaorman et al.
6,633,741 B1 10/2003 Posa et al.
6,633,846 B1 10/2003 Bennett et al.
6,633,932 B1 10/2003 Bork et al.
6,642,940 B1 11/2003 Dakss et al.
6,643,401 B1 11/2003 Kashioka et al.
6,643,824 B1 11/2003 Bates et al.
6,647,260 B2 11/2003 Dusse et al.
6,650,735 B2 11/2003 Burton et al.
6,651,042 B1 11/2003 Field et al.
6,651,218 B1 11/2003 Adler et al.
6,654,740 B2 11/2003 Tokuda et al.
6,658,389 B1 12/2003 Alpdemir
6,658,408 B2 12/2003 Yano et al.
6,658,577 B2 12/2003 Huppi et al.
6,661,438 B1 12/2003 Shiraishi et al.
6,662,023 B1 12/2003 Helle
6,665,639 B2 12/2003 Mozer et al.
6,665,640 B1 12/2003 Bennett et al.
6,665,641 B1 12/2003 Coorman et al.
6,671,672 B1 12/2003 Heck
6,671,683 B2 12/2003 Kanno
6,671,856 B1 12/2003 Gillam
6,675,169 B1 1/2004 Bennett et al.
6,675,233 B1 1/2004 Du et al.
6,677,932 B1 1/2004 Westerman

(56) **References Cited**

U.S. PATENT DOCUMENTS

6,680,675 B1 1/2004 Suzuki
6,684,187 B1 1/2004 Conkie
6,684,376 B1 1/2004 Kerzman et al.
6,690,387 B2 2/2004 Zimmerman et al.
6,690,800 B2 2/2004 Resnick
6,690,828 B2 2/2004 Meyers
6,691,064 B2 2/2004 Vroman
6,691,090 B1 2/2004 Laurila et al.
6,691,111 B2 2/2004 Lazaridis et al.
6,691,151 B1 2/2004 Cheyer et al.
6,694,295 B2 2/2004 Lindholm et al.
6,694,297 B2 2/2004 Sato
6,697,780 B1 2/2004 Beutnagel et al.
6,697,824 B1 2/2004 Bowman-Amuah
6,701,294 B1 3/2004 Ball et al.
6,701,305 B1 3/2004 Holt et al.
6,701,318 B2 3/2004 Fox et al.
6,704,015 B1 3/2004 Bovarnick et al.
6,704,034 B1 3/2004 Rodriguez et al.
6,704,698 B1 3/2004 Paulsen, Jr. et al.
6,704,710 B2 3/2004 Strong
6,708,153 B2 3/2004 Brittan et al.
6,711,585 B1 3/2004 Copperman et al.
6,714,221 B1 3/2004 Christie et al.
6,716,139 B1 4/2004 Hosseinzadeh-Dolkhani et al.
6,718,324 B2 4/2004 Edlund et al.
6,718,331 B2 4/2004 Davis et al.
6,720,980 B1 4/2004 Lui et al.
6,721,728 B2 4/2004 McGreevy
6,721,734 B1 4/2004 Subasic et al.
6,724,370 B2 4/2004 Dutta et al.
6,725,197 B1 4/2004 Wuppermann et al.
6,728,675 B1 4/2004 Maddalozzo, Jr. et al.
6,728,681 B2 4/2004 Whitham
6,728,729 B1 4/2004 Jawa et al.
6,731,312 B2 5/2004 Robbin
6,732,142 B1 5/2004 Bates et al.
6,735,562 B1 5/2004 Zhang et al.
6,735,632 B1 5/2004 Kiraly et al.
6,738,738 B2 5/2004 Henton
6,738,742 B2 5/2004 Badt et al.
6,741,264 B1 5/2004 Lesser
6,742,021 B1 5/2004 Halverson et al.
6,751,592 B1 6/2004 Shiga
6,751,595 B2 6/2004 Busayapongchai et al.
6,751,621 B1 6/2004 Calistri-Yeh et al.
6,754,504 B1 6/2004 Reed
6,757,362 B1 6/2004 Cooper et al.
6,757,365 B1 6/2004 Bogard
6,757,646 B2 6/2004 Marchisio
6,757,653 B2 6/2004 Buth et al.
6,757,718 B1 6/2004 Halverson et al.
6,760,412 B1 7/2004 Loucks
6,760,700 B2 7/2004 Lewis et al.
6,760,754 B1 7/2004 Isaacs et al.
6,762,741 B2 7/2004 Weindorf
6,762,777 B2 7/2004 Carroll
6,763,089 B2 7/2004 Feigenbaum
6,766,294 B2 7/2004 MacGinite et al.
6,766,295 B1 7/2004 Murveit et al.
6,766,320 B1 7/2004 Wang et al.
6,766,324 B2 7/2004 Carlson et al.
6,768,979 B1 7/2004 Menendez-Pidal et al.
6,771,982 B1 8/2004 Toupin
6,772,123 B2 8/2004 Cooklev et al.
6,772,195 B1 8/2004 Hatlelid et al.
6,772,394 B1 8/2004 Kamada
6,775,358 B1 8/2004 Breitenbach et al.
6,778,951 B1 8/2004 Contractor
6,778,952 B2 8/2004 Bellegarda
6,778,962 B1 8/2004 Kasai et al.
6,778,970 B2 8/2004 Au
6,778,979 B2 8/2004 Grefenstette et al.
6,782,510 B1 8/2004 Gross et al.
6,784,901 B1 8/2004 Harvey et al.
6,789,094 B2 9/2004 Rudoff et al.
6,789,231 B1 9/2004 Reynar et al.
6,790,704 B2 9/2004 Doyle et al.
6,792,082 B1 9/2004 Levine
6,792,083 B2 9/2004 Dams et al.
6,792,086 B1 9/2004 Saylor et al.
6,792,407 B2 9/2004 Kibre et al.
6,794,566 B2 9/2004 Pachet
6,795,059 B2 9/2004 Endo
6,799,226 B1 9/2004 Robbin et al.
6,801,604 B2 10/2004 Maes et al.
6,801,964 B1 10/2004 Mahdavi
6,803,905 B1 10/2004 Capps et al.
6,804,649 B2 10/2004 Miranda
6,804,677 B2 10/2004 Shadmon et al.
6,807,536 B2 10/2004 Achlioptas et al.
6,807,574 B1 10/2004 Partovi et al.
6,809,724 B1 10/2004 Shiraishi et al.
6,810,379 B1 10/2004 Vermeulen et al.
6,813,218 B1 11/2004 Antonelli et al.
6,813,491 B1 11/2004 McKinney
6,813,607 B1 11/2004 Faruquie et al.
6,816,578 B1 11/2004 Kredo et al.
6,820,055 B2 11/2004 Saindon et al.
6,829,018 B2 12/2004 Lin et al.
6,829,603 B1 12/2004 Chai et al.
6,832,194 B1 12/2004 Mozer et al.
6,832,381 B1 12/2004 Mathur et al.
6,836,651 B2 12/2004 Segal et al.
6,836,760 B1 12/2004 Bellegarda et al.
6,839,464 B2 1/2005 Hawkins et al.
6,839,669 B1 1/2005 Gould et al.
6,839,670 B1 1/2005 Stammler et al.
6,839,742 B1 1/2005 Dyer et al.
6,842,767 B1 1/2005 Partovi et al.
6,847,966 B1 1/2005 Sommer et al.
6,847,979 B2 1/2005 Allemang et al.
6,850,775 B1 2/2005 Berg
6,850,887 B2 2/2005 Epstein et al.
6,851,115 B1 2/2005 Cheyer et al.
6,856,259 B1 2/2005 Sharp
6,857,800 B2 2/2005 Zhang et al.
6,859,931 B1 2/2005 Cheyer et al.
6,862,568 B2 3/2005 Case
6,862,710 B1 3/2005 Marchisio
6,862,713 B1 3/2005 Kraft et al.
6,865,533 B2 3/2005 Addison et al.
6,868,045 B1 3/2005 Schroder
6,868,385 B1 3/2005 Gerson
6,870,529 B1 3/2005 Davis
6,871,346 B1 3/2005 Kumbalimutt et al.
6,873,953 B1 3/2005 Lennig
6,873,986 B2 3/2005 McConnell et al.
6,876,947 B1 4/2005 Darley et al.
6,877,003 B2 4/2005 Ho et al.
6,879,957 B1 4/2005 Pechter et al.
6,882,335 B2 4/2005 Saarinen
6,882,337 B2 4/2005 Shetter
6,882,747 B2 4/2005 Thawonmas et al.
6,882,955 B1 4/2005 Ohlenbusch et al.
6,882,971 B2 4/2005 Craner
6,885,734 B1 4/2005 Eberle et al.
6,889,361 B1 5/2005 Bates et al.
6,895,084 B1 5/2005 Saylor et al.
6,895,257 B2 5/2005 Boman et al.
6,895,380 B2 5/2005 Sepe, Jr.
6,895,558 B1 5/2005 Loveland
6,898,550 B1 5/2005 Blackadar et al.
6,901,364 B2 5/2005 Nguyen et al.
6,901,399 B1 5/2005 Corston et al.
6,904,405 B2 6/2005 Suominen
6,907,112 B1 6/2005 Guedalia et al.
6,907,140 B2 6/2005 Matsugu et al.
6,910,004 B2 6/2005 Tarbouriech et al.
6,910,007 B2 6/2005 Stylianou et al.
6,910,012 B2 6/2005 Hartley et al.
6,910,186 B2 6/2005 Kim
6,911,971 B2 6/2005 Suzuki et al.
6,912,407 B1 6/2005 Clarke et al.

(56) **References Cited**

U.S. PATENT DOCUMENTS

6,912,498 B2 6/2005 Stevens et al.
6,912,499 B1 6/2005 Sabourin et al.
6,915,138 B2 7/2005 Kraft
6,915,246 B2 7/2005 Gusler et al.
6,915,294 B1 7/2005 Singh et al.
6,917,373 B2 7/2005 Vong et al.
6,918,677 B2 7/2005 Shipman
6,924,828 B1 8/2005 Hirsch
6,925,438 B2 8/2005 Mohamed et al.
6,928,149 B1 8/2005 Panjwani et al.
6,928,614 B1 8/2005 Everhart
6,931,255 B2 8/2005 Mekuria
6,931,384 B1 8/2005 Horvitz et al.
6,932,708 B2 8/2005 Yamashita et al.
6,933,928 B1 8/2005 Lilienthal et al.
6,934,394 B1 8/2005 Anderson
6,934,684 B2 8/2005 Alpdemir et al.
6,934,756 B2 8/2005 Maes
6,934,812 B1 8/2005 Robbin et al.
6,937,975 B1 8/2005 Elworthy
6,937,986 B2 8/2005 Denenberg et al.
6,944,593 B2 9/2005 Kuzunuki et al.
6,944,846 B2 9/2005 Ryzhov
6,948,094 B2 9/2005 Schultz et al.
6,950,087 B2 9/2005 Knox et al.
6,950,502 B1 9/2005 Jenkins
6,952,799 B2 10/2005 Edwards et al.
6,954,755 B2 10/2005 Reisman
6,954,899 B1 10/2005 Anderson
6,956,845 B2 10/2005 Baker et al.
6,957,076 B2 10/2005 Hunzinger
6,957,183 B2 10/2005 Malayath et al.
6,960,734 B1 11/2005 Park
6,961,699 B1 11/2005 Kahn et al.
6,961,912 B2 11/2005 Aoki et al.
6,963,759 B1 11/2005 Gerson
6,963,841 B2 11/2005 Handal et al.
6,964,023 B2 11/2005 Maes et al.
6,965,376 B2 11/2005 Tani et al.
6,965,863 B1 11/2005 Zuberec et al.
6,968,311 B2 11/2005 Knockeart et al.
6,970,820 B2 11/2005 Junqua et al.
6,970,881 B1 11/2005 Mohan et al.
6,970,915 B1 11/2005 Partovi et al.
6,970,935 B1 11/2005 Maes
6,976,090 B2 12/2005 Ben-Shaul et al.
6,978,127 B1 12/2005 Bulthuis et al.
6,978,239 B2 12/2005 Chu et al.
6,980,949 B2 12/2005 Ford
6,980,953 B1 12/2005 Kanevsky et al.
6,980,955 B2 12/2005 Okutani et al.
6,983,251 B1 1/2006 Umemoto et al.
6,985,858 B2 1/2006 Frey et al.
6,985,865 B1 1/2006 Packingham et al.
6,985,958 B2 1/2006 Zwiegincew et al.
6,988,063 B2 1/2006 Tokuda et al.
6,988,071 B1 1/2006 Gazdzinski
6,990,450 B2 1/2006 Case et al.
6,996,520 B2 2/2006 Levin
6,996,531 B2 2/2006 Korall et al.
6,996,575 B2 2/2006 Cox et al.
6,999,066 B2 2/2006 Litwiller
6,999,914 B1 2/2006 Boerner et al.
6,999,925 B2 2/2006 Fischer et al.
6,999,927 B2 2/2006 Mozer et al.
7,000,189 B2 2/2006 Dutta et al.
7,002,556 B2 2/2006 Tsukada et al.
7,003,099 B1 2/2006 Zhang et al.
7,003,463 B1 2/2006 Maes et al.
7,003,522 B1 2/2006 Reynar et al.
7,006,969 B2 2/2006 Atal
7,006,973 B1 2/2006 Genly et al.
7,007,026 B2 2/2006 Wilkinson et al.
7,007,239 B1 2/2006 Hawkins et al.
7,010,581 B2 3/2006 Brown et al.
7,013,289 B2 3/2006 Horn et al.
7,013,308 B1 3/2006 Tunstall-Pedoe
7,013,429 B2 3/2006 Fujimoto et al.
7,015,894 B2 3/2006 Morohoshi
7,020,685 B1 3/2006 Chen et al.
7,024,363 B1 4/2006 Comerford et al.
7,024,364 B2 4/2006 Guerra et al.
7,024,366 B1 4/2006 Deyoe et al.
7,024,460 B2 4/2006 Koopmas et al.
7,027,568 B1 4/2006 Simpson et al.
7,027,974 B1 4/2006 Busch et al.
7,027,990 B2 4/2006 Sussman
7,028,252 B1 4/2006 Baru et al.
7,030,861 B1 4/2006 Westerman et al.
7,031,530 B2 4/2006 Driggs et al.
7,031,909 B2 4/2006 Mao et al.
7,035,794 B2 4/2006 Sirivara
7,035,801 B2 4/2006 Jimenez-Feltstrom
7,035,807 B1 4/2006 Brittain et al.
7,036,128 B1 4/2006 Julia et al.
7,036,681 B2 5/2006 Suda et al.
7,038,659 B2 5/2006 Rajkowski
7,039,588 B2 5/2006 Okutani et al.
7,043,420 B2 5/2006 Ratnaparkhi
7,043,422 B2 5/2006 Gao et al.
7,046,230 B2 5/2006 Zadesky et al.
7,046,850 B2 5/2006 Braspenning et al.
7,047,193 B1 5/2006 Bellegarda
7,050,550 B2 5/2006 Steinbiss et al.
7,050,976 B1 5/2006 Packingham
7,050,977 B1 5/2006 Bennett
7,051,096 B1 5/2006 Krawiec et al.
7,054,419 B2 5/2006 Culliss
7,054,888 B2 5/2006 LaChapelle et al.
7,057,607 B2 6/2006 Mayoraz et al.
7,058,569 B2 6/2006 Coorman et al.
7,058,888 B1 6/2006 Gjerstad et al.
7,058,889 B2 6/2006 Trovato et al.
7,062,223 B2 6/2006 Gerber et al.
7,062,225 B2 6/2006 White
7,062,428 B2 6/2006 Hogenhout et al.
7,062,438 B2 6/2006 Kobayashi et al.
7,065,185 B1 6/2006 Koch
7,065,485 B1 6/2006 Chong-White et al.
7,069,213 B2 6/2006 Thompson
7,069,220 B2 6/2006 Coffman et al.
7,069,560 B1 6/2006 Cheyer et al.
7,072,686 B1 7/2006 Schrager
7,072,941 B2 7/2006 Griffin et al.
7,076,527 B2 7/2006 Bellegarda et al.
7,079,713 B2 7/2006 Simmons
7,082,322 B2 7/2006 Harano
7,084,758 B1 8/2006 Cole
7,084,856 B2 8/2006 Huppi
7,085,723 B2 8/2006 Ross et al.
7,085,960 B2 8/2006 Bouat et al.
7,088,345 B2 8/2006 Robinson et al.
7,089,292 B1 8/2006 Roderick et al.
7,092,370 B2 8/2006 Jiang et al.
7,092,887 B2 8/2006 Mozer et al.
7,092,928 B1 8/2006 Elad et al.
7,092,950 B2 8/2006 Wong et al.
7,093,693 B1 8/2006 Gazdzinski
7,095,733 B1 8/2006 Yarlagadda et al.
7,096,183 B2 8/2006 Junqua
7,100,117 B1 8/2006 Chwa et al.
7,103,548 B2 9/2006 Squibbs et al.
7,107,204 B1 9/2006 Liu et al.
7,111,248 B2 9/2006 Mulvey et al.
7,111,774 B2 9/2006 Song
7,113,803 B2 9/2006 Dehlin
7,113,943 B2 9/2006 Bradford et al.
7,115,035 B2 10/2006 Tanaka
7,117,231 B2 10/2006 Fischer et al.
7,120,865 B1 10/2006 Horvitz et al.
7,123,696 B2 10/2006 Lowe
7,124,081 B1 10/2006 Bellegarda
7,124,082 B2 10/2006 Freedman
7,124,164 B1 10/2006 Chemtob

(56) **References Cited**

U.S. PATENT DOCUMENTS

7,127,046 B1 10/2006 Smith et al.
7,127,394 B2 10/2006 Strong et al.
7,127,396 B2 10/2006 Chu et al.
7,127,403 B1 10/2006 Saylor et al.
7,129,932 B1 10/2006 Klarlund et al.
7,133,900 B1 11/2006 Szeto
7,136,710 B1 11/2006 Hoffberg et al.
7,136,818 B1 11/2006 Cosatto et al.
7,137,126 B1 11/2006 Coffman et al.
7,139,697 B2 11/2006 Häkkinen et al.
7,139,714 B2 11/2006 Bennett et al.
7,139,722 B2 11/2006 Perrella et al.
7,143,028 B2 11/2006 Hillis et al.
7,143,038 B2 11/2006 Katae
7,143,040 B2 11/2006 Durston et al.
7,146,319 B2 12/2006 Hunt
7,146,437 B2 12/2006 Robbin et al.
7,149,319 B2 12/2006 Roeck
7,149,695 B1 12/2006 Bellegarda
7,149,964 B1 12/2006 Cottrille et al.
7,152,070 B1 12/2006 Musick et al.
7,152,093 B2 12/2006 Ludwig et al.
7,154,526 B2 12/2006 Foote et al.
7,155,668 B2 12/2006 Holland et al.
7,158,647 B2 1/2007 Azima et al.
7,159,174 B2 1/2007 Johnson et al.
7,162,412 B2 1/2007 Yamada et al.
7,162,482 B1 1/2007 Dunning
7,165,073 B2 1/2007 Vandersluis
7,166,791 B2 1/2007 Robbin et al.
7,171,350 B2 1/2007 Lin et al.
7,171,360 B2 1/2007 Huang et al.
7,174,042 B1 2/2007 Simmons et al.
7,174,295 B1 2/2007 Kivimaki
7,174,297 B2 2/2007 Guerra et al.
7,174,298 B2 2/2007 Sharma
7,177,794 B2 2/2007 Mani et al.
7,177,798 B2 2/2007 Hsu et al.
7,177,817 B1 2/2007 Khosla et al.
7,181,386 B2 2/2007 Mohri et al.
7,181,388 B2 2/2007 Tian
7,184,064 B2 2/2007 Zimmerman et al.
7,185,276 B2 2/2007 Keswa
7,188,085 B2 3/2007 Pelletier
7,190,351 B1 3/2007 Goren
7,190,794 B2 3/2007 Hinde
7,191,118 B2 3/2007 Bellegarda
7,191,131 B1 3/2007 Nagao
7,193,615 B2 3/2007 Kim et al.
7,194,186 B1 3/2007 Strub et al.
7,194,413 B2 3/2007 Mahoney et al.
7,194,471 B1 3/2007 Nagatsuka et al.
7,194,611 B2 3/2007 Bear et al.
7,194,699 B2 3/2007 Thomson et al.
7,197,120 B2 3/2007 Luehrig et al.
7,197,460 B1 3/2007 Gupta et al.
7,200,550 B2 4/2007 Menezes et al.
7,200,558 B2 4/2007 Kato et al.
7,200,559 B2 4/2007 Wang
7,203,297 B2 4/2007 Vitikainen et al.
7,203,646 B2 4/2007 Bennett
7,206,809 B2 4/2007 Ludwig et al.
7,212,827 B1 5/2007 Veschi
7,216,008 B2 5/2007 Sakata
7,216,066 B2 5/2007 Di et al.
7,216,073 B2 5/2007 Lavi et al.
7,216,080 B2 5/2007 Tsiao et al.
7,218,920 B2 5/2007 Hyon
7,218,943 B2 5/2007 Klassen et al.
7,219,063 B2 5/2007 Schalk et al.
7,219,123 B1 5/2007 Fiechter et al.
7,225,125 B2 5/2007 Bennett et al.
7,228,278 B2 6/2007 Nguyen et al.
7,231,343 B1 6/2007 Treadgold et al.
7,231,597 B1 6/2007 Braun et al.
7,233,790 B2 6/2007 Kjellberg et al.
7,233,904 B2 6/2007 Luisi
7,234,026 B2 6/2007 Robbin et al.
7,236,932 B1 6/2007 Grajski
7,240,002 B2 7/2007 Minamino et al.
7,243,130 B2 7/2007 Horvitz et al.
7,243,305 B2 7/2007 Schabes et al.
7,246,118 B2 7/2007 Chastain et al.
7,246,151 B2 7/2007 Isaacs et al.
7,248,900 B2 7/2007 Deeds et al.
7,251,313 B1 7/2007 Miller et al.
7,251,454 B2 7/2007 White
7,254,773 B2 8/2007 Bates et al.
7,257,537 B2 8/2007 Ross et al.
7,259,752 B1 8/2007 Simmons
7,260,529 B1 8/2007 Lengen
7,260,567 B2 8/2007 Parikh et al.
7,263,373 B2 8/2007 Mattisson
7,266,189 B1 9/2007 Day
7,266,495 B1 9/2007 Beaufays et al.
7,266,496 B2 9/2007 Wang et al.
7,266,499 B2 9/2007 Surace et al.
7,269,544 B2 9/2007 Simske
7,269,556 B2 9/2007 Kiss et al.
7,272,224 B1 9/2007 Normile et al.
7,275,063 B2 9/2007 Horn
7,277,088 B2 10/2007 Robinson et al.
7,277,854 B2 10/2007 Bennett et al.
7,277,855 B1 10/2007 Acker et al.
7,280,958 B2 10/2007 Pavlov et al.
7,283,072 B1 10/2007 Plachta et al.
7,289,102 B2 10/2007 Hinckley et al.
7,290,039 B1 10/2007 Lisitsa et al.
7,292,579 B2 11/2007 Morris
7,292,979 B2 11/2007 Karas et al.
7,292,980 B1 11/2007 August et al.
7,296,019 B1 11/2007 Chandrasekar et al.
7,296,230 B2 11/2007 Fukatsu et al.
7,299,033 B2 11/2007 Kjellberg et al.
7,302,392 B1 11/2007 Thenthiruperai et al.
7,302,394 B1 11/2007 Baray et al.
7,302,686 B2 11/2007 Togawa
7,308,404 B2 12/2007 Venkataraman et al.
7,308,408 B1 12/2007 Stifelman et al.
7,310,329 B2 12/2007 Vieri et al.
7,310,600 B1 12/2007 Garner et al.
7,310,605 B2 12/2007 Janakiraman et al.
7,313,523 B1 12/2007 Bellegarda et al.
7,315,809 B2 1/2008 Xun
7,315,818 B2 1/2008 Stevens et al.
7,318,020 B1 1/2008 Kim
7,319,957 B2 1/2008 Robinson et al.
7,321,783 B2 1/2008 Kim, II
7,322,023 B2 1/2008 Shulman et al.
7,324,833 B2 1/2008 White et al.
7,324,947 B2 1/2008 Jordan et al.
7,328,155 B2 2/2008 Endo et al.
7,328,250 B2 2/2008 Wang et al.
7,345,670 B2 3/2008 Armstrong
7,345,671 B2 3/2008 Robbin et al.
7,349,953 B2 3/2008 Lisitsa et al.
7,353,139 B1 4/2008 Burrell et al.
7,359,493 B1 4/2008 Wang et al.
7,359,671 B2 4/2008 Richenstein et al.
7,359,851 B2 4/2008 Tong et al.
7,360,158 B1 4/2008 Beeman
7,362,738 B2 4/2008 Taube et al.
7,363,227 B2 4/2008 Mapes-Riordan et al.
7,363,586 B1 4/2008 Briggs et al.
7,365,260 B2 4/2008 Kawashima
7,366,461 B1 4/2008 Brown
7,373,291 B2 5/2008 Garst
7,373,612 B2 5/2008 Risch et al.
7,376,556 B2 5/2008 Bennett
7,376,632 B1 5/2008 Sadek et al.
7,376,645 B2 5/2008 Bernard
7,378,963 B1 5/2008 Begault et al.
7,379,874 B2 5/2008 Schmid et al.
7,380,203 B2 5/2008 Keely et al.

(56) **References Cited**

U.S. PATENT DOCUMENTS

7,383,170 B2 6/2008 Mills et al.
7,386,438 B1 6/2008 Franz et al.
7,386,449 B2 6/2008 Sun et al.
7,386,799 B1 6/2008 Clanton et al.
7,389,224 B1 6/2008 Elworthy
7,389,225 B1 6/2008 Jensen et al.
7,392,185 B2 6/2008 Bennett
7,394,947 B2 7/2008 Li et al.
7,398,209 B2 7/2008 Kennewick et al.
7,401,300 B2 7/2008 Nurmi
7,403,938 B2 7/2008 Harrison et al.
7,403,941 B2 7/2008 Bedworth et al.
7,404,143 B2 7/2008 Freelander et al.
7,409,337 B1 8/2008 Potter et al.
7,409,347 B1 8/2008 Bellegarda
7,412,389 B2 8/2008 Yang
7,412,470 B2 8/2008 Masuno et al.
7,415,100 B2 8/2008 Cooper et al.
7,415,469 B2 8/2008 Singh et al.
7,418,389 B2 8/2008 Chu et al.
7,418,392 B1 8/2008 Mozer et al.
7,426,467 B2 9/2008 Nashida et al.
7,426,468 B2 9/2008 Coifman et al.
7,427,024 B1 9/2008 Gazdzinski et al.
7,428,541 B2 9/2008 Houle
7,433,869 B2 10/2008 Gollapudi
7,433,921 B2 10/2008 Ludwig et al.
7,436,947 B2 10/2008 Wadler et al.
7,441,184 B2 10/2008 Frerebeau et al.
7,443,316 B2 10/2008 Lim
7,444,589 B2 10/2008 Zellner
7,447,360 B2 11/2008 Li et al.
7,447,624 B2 11/2008 Fuhrmann er al.
7,447,635 B1 11/2008 Konopka et al.
7,447,637 B1 11/2008 Grant et al.
7,451,081 B1 11/2008 Gajic et al.
7,454,351 B2 11/2008 Jeschke et al.
7,460,652 B2 12/2008 Chang
7,461,043 B2 12/2008 Hess
7,467,087 B1 12/2008 Gillick et al.
7,467,164 B2 12/2008 Marsh
7,472,061 B1 12/2008 Alewine et al.
7,472,065 B2 12/2008 Aaron et al.
7,475,010 B2 1/2009 Chao
7,475,015 B2 1/2009 Epstein et al.
7,475,063 B2 1/2009 Datta et al.
7,477,238 B2 1/2009 Fux et al.
7,477,240 B2 1/2009 Yanagisawa
7,478,037 B2 1/2009 Strong
7,478,091 B2 1/2009 Mojsilovic et al.
7,478,129 B1 1/2009 Chemtob
7,479,948 B2 1/2009 Kim et al.
7,479,949 B2 1/2009 Jobs et al.
7,483,832 B2 1/2009 Tischer
7,483,894 B2 1/2009 Cao
7,487,089 B2 2/2009 Mozer
7,487,093 B2 2/2009 Mutsuno et al.
7,490,034 B2 2/2009 Finnigan et al.
7,490,039 B1 2/2009 Shaffer et al.
7,493,560 B1 2/2009 Kipnes et al.
7,496,498 B2 2/2009 Chu et al.
7,496,512 B2 2/2009 Zhao et al.
7,499,923 B2 3/2009 Kawatani
7,502,738 B2 3/2009 Kennewick et al.
7,505,795 B1 3/2009 Lim et al.
7,508,324 B2 3/2009 Suraqui
7,508,373 B2 3/2009 Lin et al.
7,516,123 B2 4/2009 Betz et al.
7,519,327 B2 4/2009 White
7,519,398 B2 4/2009 Hirose
7,522,927 B2 4/2009 Fitch et al.
7,523,036 B2 4/2009 Akabane et al.
7,523,108 B2 4/2009 Cao
7,526,466 B2 4/2009 Au
7,526,738 B2 4/2009 Ording et al.
7,528,713 B2 5/2009 Singh et al.
7,529,671 B2 5/2009 Rockenbeck et al.
7,529,676 B2 5/2009 Koyama
7,535,997 B1 5/2009 McQuaide, Jr. et al.
7,536,029 B2 5/2009 Choi et al.
7,536,565 B2 5/2009 Girish et al.
7,538,685 B1 5/2009 Cooper et al.
7,539,619 B1 5/2009 Seligman et al.
7,539,656 B2 5/2009 Fratkina et al.
7,541,940 B2 6/2009 Upton
7,542,967 B2 6/2009 Hurst-Hiller et al.
7,542,971 B2 6/2009 Thione et al.
7,543,232 B2 6/2009 Easton, Jr. et al.
7,546,382 B2 6/2009 Healey et al.
7,546,529 B2 6/2009 Reynar et al.
7,548,895 B2 6/2009 Pulsipher
7,552,045 B2 6/2009 Barliga et al.
7,552,055 B2 6/2009 Lecoeuche
7,555,431 B2 6/2009 Bennett
7,555,496 B1 6/2009 Lantrip et al.
7,558,381 B1 7/2009 Ali et al.
7,558,730 B2 7/2009 Davis et al.
7,559,026 B2 7/2009 Girish et al.
7,561,069 B2 7/2009 Horstemeyer
7,562,007 B2 7/2009 Hwang
7,562,032 B2 7/2009 Abbosh et al.
7,565,104 B1 7/2009 Brown et al.
7,565,380 B1 7/2009 Venkatachary
7,571,092 B1 8/2009 Nieh
7,571,106 B2 8/2009 Cao et al.
7,577,522 B2 8/2009 Rosenberg
7,580,551 B1 8/2009 Srihari et al.
7,580,576 B2 8/2009 Wang et al.
7,580,839 B2 8/2009 Tamura et al.
7,584,093 B2 9/2009 Potter et al.
7,584,278 B2 9/2009 Rajarajan et al.
7,584,429 B2 9/2009 Fabritius
7,593,868 B2 9/2009 Margiloff et al.
7,596,269 B2 9/2009 King et al.
7,596,499 B2 9/2009 Anguera et al.
7,596,606 B2 9/2009 Codignotto
7,596,765 B2 9/2009 Almas
7,599,918 B2 10/2009 Shen et al.
7,603,349 B1 10/2009 Kraft et al.
7,603,381 B2 10/2009 Burke et al.
7,606,444 B1 10/2009 Erol et al.
7,609,179 B2 10/2009 Diaz-Gutierrez et al.
7,610,258 B2 10/2009 Yuknewicz et al.
7,613,264 B2 11/2009 Wells et al.
7,614,008 B2 11/2009 Ording
7,617,094 B2 11/2009 Aoki et al.
7,620,407 B1 11/2009 Donald et al.
7,620,549 B2 11/2009 Di Cristo et al.
7,620,894 B1 11/2009 Kahn
7,623,119 B2 11/2009 Autio et al.
7,624,007 B2 11/2009 Bennett
7,627,481 B1 12/2009 Kuo et al.
7,630,901 B2 12/2009 Omi
7,633,076 B2 12/2009 Huppi et al.
7,634,409 B2 12/2009 Kennewick et al.
7,634,413 B1 12/2009 Kuo et al.
7,634,718 B2 12/2009 Nakajima
7,634,732 B1 12/2009 Blagsvedt et al.
7,636,657 B2 12/2009 Ju et al.
7,640,158 B2 12/2009 Detlef et al.
7,640,160 B2 12/2009 Di Cristo et al.
7,643,990 B1 1/2010 Bellegarda
7,647,225 B2 1/2010 Bennett et al.
7,649,454 B2 1/2010 Singh et al.
7,649,877 B2 1/2010 Vieri et al.
7,653,883 B2 1/2010 Hotelling et al.
7,656,393 B2 2/2010 King et al.
7,657,424 B2 2/2010 Bennett
7,657,828 B2 2/2010 Lucas et al.
7,657,844 B2 2/2010 Gibson et al.
7,657,849 B2 2/2010 Chaudhri et al.
7,663,607 B2 2/2010 Hotelling et al.
7,664,558 B2 2/2010 Lindahl et al.
7,664,638 B2 2/2010 Cooper et al.

(56) **References Cited**

U.S. PATENT DOCUMENTS

7,669,134 B1 2/2010 Christie et al.
7,672,841 B2 3/2010 Bennett
7,672,952 B2 3/2010 Isaacson et al.
7,673,238 B2 3/2010 Girish et al.
7,673,340 B1 3/2010 Cohen et al.
7,676,026 B1 3/2010 Baxter, Jr.
7,676,365 B2 3/2010 Hwang et al.
7,676,463 B2 3/2010 Thompson et al.
7,679,534 B2 3/2010 Kay et al.
7,680,649 B2 3/2010 Park
7,681,126 B2 3/2010 Roose
7,683,886 B2 3/2010 Willey
7,683,893 B2 3/2010 Kim
7,684,985 B2 3/2010 Dominach et al.
7,684,990 B2 3/2010 Caskey et al.
7,684,991 B2 3/2010 Stohr et al.
7,689,245 B2 3/2010 Cox et al.
7,689,408 B2 3/2010 Chen et al.
7,689,409 B2 3/2010 Heinecke
7,689,421 B2 3/2010 Li et al.
7,693,715 B2 4/2010 Hwang et al.
7,693,717 B2 4/2010 Kahn et al.
7,693,719 B2 4/2010 Chu et al.
7,693,720 B2 4/2010 Kennewick et al.
7,698,131 B2 4/2010 Bennett
7,702,500 B2 4/2010 Blaedow
7,702,508 B2 4/2010 Bennett
7,703,091 B1 4/2010 Martin et al.
7,706,510 B2 4/2010 Ng
7,707,026 B2 4/2010 Liu
7,707,027 B2 4/2010 Balchandran et al.
7,707,032 B2 4/2010 Wang et al.
7,707,221 B1 4/2010 Dunning et al.
7,707,267 B2 4/2010 Lisitsa et al.
7,710,262 B2 5/2010 Ruha
7,711,129 B2 5/2010 Lindahl et al.
7,711,550 B1 5/2010 Feinberg et al.
7,711,565 B1 5/2010 Gazdzinski
7,711,672 B2 5/2010 Au
7,712,053 B2 5/2010 Bradford et al.
7,716,056 B2 5/2010 Weng et al.
7,716,216 B1 5/2010 Harik et al.
7,720,674 B2 5/2010 Kaiser et al.
7,720,683 B1 5/2010 Vermeulen et al.
7,721,226 B2 5/2010 Barabe et al.
7,721,301 B2 5/2010 Wong et al.
7,724,242 B2 5/2010 Hillis et al.
7,724,696 B1 5/2010 Parekh
7,725,307 B2 5/2010 Bennett
7,725,318 B2 5/2010 Gavalda et al.
7,725,320 B2 5/2010 Bennett
7,725,321 B2 5/2010 Bennett
7,725,838 B2 5/2010 Williams
7,729,904 B2 6/2010 Bennett
7,729,916 B2 6/2010 Coffman et al.
7,734,461 B2 6/2010 Kwak et al.
7,735,012 B2 6/2010 Naik
7,739,588 B2 6/2010 Reynar et al.
7,742,953 B2 6/2010 King et al.
7,743,188 B2 6/2010 Haitani et al.
7,747,616 B2 6/2010 Yamada et al.
7,752,152 B2 7/2010 Paek et al.
7,756,708 B2 7/2010 Cohen et al.
7,756,868 B2 7/2010 Lee
7,756,871 B2 7/2010 Yacoub et al.
7,757,173 B2 7/2010 Beaman
7,757,182 B2 7/2010 Elliott et al.
7,761,296 B1 7/2010 Bakis et al.
7,763,842 B2 7/2010 Hsu et al.
7,774,204 B2 8/2010 Mozer et al.
7,774,388 B1 8/2010 Runchey
7,777,717 B2 8/2010 Fux et al.
7,778,432 B2 8/2010 Larsen
7,778,595 B2 8/2010 White et al.
7,778,632 B2 8/2010 Kurlander et al.
7,778,830 B2 8/2010 Davis et al.
7,779,353 B2 8/2010 Grigoriu et al.
7,779,356 B2 8/2010 Griesmer
7,779,357 B2 8/2010 Naik
7,783,283 B2 8/2010 Kuusinen et al.
7,783,486 B2 8/2010 Rosser et al.
7,788,590 B2 8/2010 Taboada et al.
7,788,663 B2 8/2010 Illowsky et al.
7,796,980 B1 9/2010 McKinney et al.
7,797,265 B2 9/2010 Brinker et al.
7,797,269 B2 9/2010 Rieman et al.
7,797,331 B2 9/2010 Theimer et al.
7,797,629 B2 9/2010 Fux et al.
7,801,721 B2 9/2010 Rosart et al.
7,801,728 B2 9/2010 Ben-David et al.
7,801,729 B2 9/2010 Mozer
7,805,299 B2 9/2010 Coifman
7,809,550 B1 10/2010 Barrows
7,809,565 B2 10/2010 Coifman
7,809,569 B2 10/2010 Attwater et al.
7,809,570 B2 10/2010 Kennewick et al.
7,809,610 B2 10/2010 Cao
7,809,744 B2 10/2010 Nevidomski et al.
7,818,165 B2 10/2010 Carlgren et al.
7,818,176 B2 10/2010 Freeman et al.
7,818,215 B2 10/2010 King et al.
7,818,291 B2 10/2010 Ferguson et al.
7,818,672 B2 10/2010 Mccormack et al.
7,822,608 B2 10/2010 Cross, Jr. et al.
7,823,123 B2 10/2010 Sabbouh
7,826,945 B2 11/2010 Zhang et al.
7,827,047 B2 11/2010 Anderson et al.
7,831,423 B2 11/2010 Schubert
7,831,426 B2 11/2010 Bennett
7,831,432 B2 11/2010 Bodin et al.
7,835,504 B1 11/2010 Donald et al.
7,836,437 B2 11/2010 Kacmarcik et al.
7,840,348 B2 11/2010 Kim et al.
7,840,400 B2 11/2010 Lavi et al.
7,840,447 B2 11/2010 Kleinrock et al.
7,840,581 B2 11/2010 Ross et al.
7,840,912 B2 11/2010 Elias et al.
7,844,394 B2 11/2010 Kim
7,848,924 B2 12/2010 Nurminen et al.
7,848,926 B2 12/2010 Goto et al.
7,853,444 B2 12/2010 Wang et al.
7,853,445 B2 12/2010 Bachenko et al.
7,853,574 B2 12/2010 Kraenzel et al.
7,853,577 B2 12/2010 Sundaresan et al.
7,853,664 B1 12/2010 Wang et al.
7,853,900 B2 12/2010 Nguyen et al.
7,865,817 B2 1/2011 Ryan et al.
7,869,999 B2 1/2011 Amato et al.
7,870,118 B2 1/2011 Jiang et al.
7,870,133 B2 1/2011 Krishnamoorthy et al.
7,873,519 B2 1/2011 Bennett
7,873,654 B2 1/2011 Bernard
7,877,705 B2 1/2011 Chambers et al.
7,880,730 B2 2/2011 Robinson et al.
7,881,283 B2 2/2011 Cormier et al.
7,881,936 B2 2/2011 Longe et al.
7,885,390 B2 2/2011 Chaudhuri et al.
7,885,844 B1 2/2011 Cohen et al.
7,886,233 B2 2/2011 Rainisto et al.
7,889,184 B2 2/2011 Blumenberg et al.
7,889,185 B2 2/2011 Blumenberg et al.
7,890,330 B2 2/2011 Ozkaragoz et al.
7,890,652 B2 2/2011 Bull et al.
7,895,531 B2 2/2011 Radtke et al.
7,899,666 B2 3/2011 Varone
7,908,287 B1 3/2011 Katragadda
7,912,289 B2 3/2011 Kansal et al.
7,912,699 B1 3/2011 Saraclar et al.
7,912,702 B2 3/2011 Bennett
7,912,720 B1 3/2011 Hakkani-Tur et al.
7,912,828 B2 3/2011 Bonnet et al.
7,913,185 B1 3/2011 Benson et al.
7,916,979 B2 3/2011 Simmons
7,917,367 B2 3/2011 Di Cristo et al.

(56) **References Cited**

U.S. PATENT DOCUMENTS

7,917,497 B2 3/2011 Harrison et al.
7,920,678 B2 4/2011 Cooper et al.
7,920,682 B2 4/2011 Byrne et al.
7,920,857 B2 4/2011 Lau et al.
7,925,525 B2 4/2011 Chin
7,925,610 B2 4/2011 Elbaz et al.
7,929,805 B2 4/2011 Wang et al.
7,930,168 B2 4/2011 Weng et al.
7,930,183 B2 4/2011 Odell et al.
7,930,197 B2 4/2011 Ozzie et al.
7,936,339 B2 5/2011 Marggraff et al.
7,936,861 B2 5/2011 Martin et al.
7,941,009 B2 5/2011 Li et al.
7,945,294 B2 5/2011 Zhang et al.
7,945,470 B1 5/2011 Cohen et al.
7,949,529 B2 5/2011 Weider et al.
7,949,534 B2 5/2011 Davis et al.
7,953,679 B2 5/2011 Chidlovskii et al.
7,957,975 B2 6/2011 Burns et al.
7,958,136 B1 6/2011 Curtis et al.
7,962,179 B2 6/2011 Huang
7,974,844 B2 7/2011 Sumita
7,974,972 B2 7/2011 Cao
7,975,216 B2 7/2011 Woolf et al.
7,983,478 B2 7/2011 Liu et al.
7,983,915 B2 7/2011 Knight et al.
7,983,917 B2 7/2011 Kennewick et al.
7,983,919 B2 7/2011 Conkie
7,983,997 B2 7/2011 Allen et al.
7,984,062 B2 7/2011 Dunning et al.
7,986,431 B2 7/2011 Emori et al.
7,987,151 B2 7/2011 Schott et al.
7,987,244 B1 7/2011 Lewis et al.
7,991,614 B2 8/2011 Washio et al.
7,992,085 B2 8/2011 Wang-Aryattanwanich et al.
7,996,228 B2 8/2011 Miller et al.
7,996,589 B2 8/2011 Schultz et al.
7,996,769 B2 8/2011 Fux et al.
7,996,792 B2 8/2011 Anzures et al.
7,999,669 B2 8/2011 Singh et al.
8,000,453 B2 8/2011 Cooper et al.
8,005,664 B2 8/2011 Hanumanthappa
8,005,679 B2 8/2011 Jordan et al.
8,006,180 B2 8/2011 Tunning et al.
8,014,308 B2 9/2011 Gates et al.
8,015,006 B2 9/2011 Kennewick et al.
8,015,011 B2 9/2011 Nagano et al.
8,015,144 B2 9/2011 Zheng et al.
8,018,431 B1 9/2011 Zehr et al.
8,019,271 B1 9/2011 Izdepski
8,024,195 B2 9/2011 Mozer et al.
8,024,415 B2 9/2011 Horvitz et al.
8,027,836 B2 9/2011 Baker et al.
8,031,943 B2 10/2011 Chen et al.
8,032,383 B1 10/2011 Bhardwaj et al.
8,036,901 B2 10/2011 Mozer
8,037,034 B2 10/2011 Plachta et al.
8,041,557 B2 10/2011 Liu
8,041,570 B2 10/2011 Mirkovic et al.
8,041,611 B2 10/2011 Kleinrock et al.
8,042,053 B2 10/2011 Darwish et al.
8,046,363 B2 10/2011 Cha et al.
8,046,374 B1 10/2011 Bromwich et al.
8,050,500 B1 11/2011 Batty et al.
8,055,502 B2 11/2011 Clark et al.
8,055,708 B2 11/2011 Chitsaz et al.
8,056,070 B2 11/2011 Goller et al.
8,060,824 B2 11/2011 Brownrigg, Jr. et al.
8,064,753 B2 11/2011 Freeman
8,065,143 B2 11/2011 Yanagihara
8,065,155 B1 11/2011 Gazdzinski
8,065,156 B2 11/2011 Gazdzinski
8,068,604 B2 11/2011 Leeds et al.
8,069,046 B2 11/2011 Kennewick et al.
8,069,422 B2 11/2011 Sheshagiri et al.
8,073,681 B2 12/2011 Baldwin et al.
8,073,695 B1 12/2011 Hendricks et al.
8,077,153 B2 12/2011 Benko et al.
8,078,473 B1 12/2011 Gazdzinski
8,082,153 B2 12/2011 Coffman et al.
8,082,498 B2 12/2011 Salamon et al.
8,090,571 B2 1/2012 Elshishiny et al.
8,095,364 B2 1/2012 Longe et al.
8,099,289 B2 1/2012 Mozer et al.
8,099,395 B2 1/2012 Pabla et al.
8,099,418 B2 1/2012 Inoue et al.
8,103,510 B2 1/2012 Sato
8,107,401 B2 1/2012 John et al.
8,112,275 B2 2/2012 Kennewick et al.
8,112,280 B2 2/2012 Lu
8,117,037 B2 2/2012 Gazdzinski
8,117,542 B2 2/2012 Radtke et al.
8,121,413 B2 2/2012 Hwang et al.
8,121,837 B2 2/2012 Agapi et al.
8,122,094 B1 2/2012 Kotab
8,122,353 B2 2/2012 Bouta
8,131,557 B2 3/2012 Davis et al.
8,135,115 B1 3/2012 Hogg, Jr. et al.
8,138,912 B2 3/2012 Singh et al.
8,140,335 B2 3/2012 Kennewick et al.
8,140,567 B2 3/2012 Padovitz et al.
8,150,694 B2 4/2012 Kennewick et al.
8,150,700 B2 4/2012 Shin et al.
8,155,956 B2 4/2012 Cho et al.
8,156,005 B2 4/2012 Vieri
8,160,883 B2 4/2012 Lecoeuche
8,165,321 B2 4/2012 Paquier et al.
8,165,886 B1 4/2012 Gagnon et al.
8,166,019 B1 4/2012 Lee et al.
8,166,032 B2 4/2012 Sommer et al.
8,170,790 B2 5/2012 Lee et al.
8,179,370 B1 5/2012 Yamasani et al.
8,188,856 B2 5/2012 Singh et al.
8,190,359 B2 5/2012 Bourne
8,195,467 B2 6/2012 Mozer et al.
8,195,468 B2 6/2012 Kennewick et al.
8,200,495 B2 6/2012 Braho et al.
8,201,109 B2 6/2012 Van Os et al.
8,204,238 B2 6/2012 Mozer
8,205,788 B1 6/2012 Gazdzinski et al.
8,209,183 B1 6/2012 Patel et al.
8,219,115 B1 7/2012 Nelissen
8,219,406 B2 7/2012 Yu et al.
8,219,407 B1 7/2012 Roy et al.
8,219,608 B2 7/2012 alSafadi et al.
8,224,649 B2 7/2012 Chaudhari et al.
8,228,299 B1 7/2012 Maloney et al.
8,239,207 B2 8/2012 Seligman et al.
8,244,712 B2 8/2012 Serlet et al.
8,255,217 B2 8/2012 Stent et al.
8,260,617 B2 9/2012 Dhanakshirur et al.
8,270,933 B2 9/2012 Riemer et al.
8,275,621 B2 9/2012 Alewine et al.
8,279,171 B2 10/2012 Hirai et al.
8,285,546 B2 10/2012 Reich
8,285,551 B2 10/2012 Gazdzinski
8,285,553 B2 10/2012 Gazdzinski
8,290,777 B1 10/2012 Nguyen et al.
8,290,778 B2 10/2012 Gazdzinski
8,290,781 B2 10/2012 Gazdzinski
8,296,124 B1 10/2012 Holsztynska et al.
8,296,145 B2 10/2012 Clark et al.
8,296,146 B2 10/2012 Gazdzinski
8,296,153 B2 10/2012 Gazdzinski
8,296,380 B1 10/2012 Kelly et al.
8,296,383 B2 10/2012 Lindahl
8,300,801 B2 10/2012 Sweeney et al.
8,301,456 B2 10/2012 Gazdzinski
8,311,834 B1 11/2012 Gazdzinski
8,311,835 B2 11/2012 Lecoeuche
8,311,838 B2 11/2012 Lindahl et al.
8,312,017 B2 11/2012 Martin et al.
8,321,786 B2 11/2012 Lunati et al.
8,332,218 B2 12/2012 Cross et al.

(56) **References Cited**

U.S. PATENT DOCUMENTS

8,332,224 B2 12/2012 Di Cristo et al.
8,332,748 B1 12/2012 Karam
8,340,975 B1 12/2012 Rosenberger
8,345,665 B2 1/2013 Vieri et al.
8,352,183 B2 1/2013 Thota et al.
8,352,268 B2 1/2013 Naik et al.
8,352,272 B2 1/2013 Rogers et al.
8,355,919 B2 1/2013 Silverman et al.
8,359,234 B2 1/2013 Vieri
8,370,158 B2 2/2013 Gazdzinski
8,371,503 B2 2/2013 Gazdzinski
8,374,871 B2 2/2013 Ehsani et al.
8,375,320 B2 2/2013 Kotler et al.
8,380,504 B1 2/2013 Peden et al.
8,380,507 B2 2/2013 Herman et al.
8,381,107 B2 2/2013 Rottler et al.
8,381,135 B2 2/2013 Hotelling et al.
8,386,485 B2 2/2013 Kerschberg et al.
8,386,926 B1 2/2013 Matsuoka
8,391,844 B2 3/2013 Lamiraux et al.
8,396,714 B2 3/2013 Rogers et al.
8,406,745 B1 3/2013 Upadhyay et al.
8,423,288 B2 4/2013 Stahl et al.
8,428,758 B2 4/2013 Naik et al.
8,447,612 B2 5/2013 Gazdzinski
8,452,597 B2 5/2013 Bringert et al.
8,458,115 B2 6/2013 Cai et al.
8,458,278 B2 6/2013 Christie et al.
8,464,150 B2 6/2013 Davidson et al.
8,479,122 B2 7/2013 Hotelling et al.
8,484,027 B1 7/2013 Murphy
8,489,599 B2 7/2013 Bellotti
8,498,857 B2 7/2013 Kopparapu et al.
8,515,750 B1 8/2013 Lei et al.
8,521,513 B2 8/2013 Millett et al.
8,527,276 B1 9/2013 Senior et al.
8,560,229 B1 10/2013 Park et al.
8,583,416 B2 11/2013 Huang et al.
8,589,869 B2 11/2013 Wolfram
8,595,004 B2 11/2013 Koshinaka
8,606,568 B1 12/2013 Tickner et al.
8,620,659 B2 12/2013 Di Cristo et al.
8,620,662 B2 12/2013 Bellegarda
8,626,681 B1 1/2014 Jurca et al.
8,645,137 B2 2/2014 Bellegarda et al.
8,654,936 B1 2/2014 Tofighbakhsh et al.
8,655,646 B2 2/2014 Lee et al.
8,655,901 B1 2/2014 Li et al.
8,660,843 B2 2/2014 Falcon et al.
8,660,849 B2 2/2014 Gruber et al.
8,660,970 B1 2/2014 Fiedorowicz
8,661,112 B2 2/2014 Creamer et al.
8,661,340 B2 2/2014 Goldsmith et al.
8,670,979 B2 3/2014 Gruber et al.
8,675,084 B2 3/2014 Bolton et al.
8,676,904 B2 3/2014 Lindahl et al.
8,677,377 B2 3/2014 Cheyer et al.
8,681,950 B2 3/2014 Vlack et al.
8,682,667 B2 3/2014 Haughay et al.
8,688,446 B2 4/2014 Yanagihara et al.
8,688,453 B1 4/2014 Joshi et al.
8,696,364 B2 4/2014 Cohen
8,706,472 B2 4/2014 Ramerth et al.
8,713,119 B2 4/2014 Lindahl et al.
8,713,418 B2 4/2014 King et al.
8,719,006 B2 5/2014 Bellegarda et al.
8,719,014 B2 5/2014 Wagner et al.
8,731,610 B2 5/2014 Appaji
8,731,912 B1 5/2014 Tickner et al.
8,731,942 B2 5/2014 Cheyer et al.
8,739,208 B2 5/2014 Rodriguez et al.
8,744,852 B1 6/2014 Seymour et al.
8,760,537 B2 6/2014 Johnson et al.
8,762,145 B2 6/2014 Ouchi et al.
8,762,156 B2 6/2014 Chen et al.
8,762,469 B2 6/2014 Lindahl et al.
8,768,693 B2 7/2014 Lempel et al.
8,768,702 B2 7/2014 Boettcher et al.
8,775,931 B2 7/2014 Fux et al.
8,781,841 B1 7/2014 Wang
8,798,995 B1 8/2014 Edara et al.
8,805,690 B1 8/2014 LeBeau et al.
8,838,457 B2 9/2014 Cerra et al.
8,855,915 B2 10/2014 Furuhata et al.
8,861,925 B1 10/2014 Ohme
8,868,409 B1 10/2014 Mengibar et al.
8,880,405 B2 11/2014 Cerra et al.
8,886,540 B2 11/2014 Cerra et al.
8,886,541 B2 11/2014 Friedlander
8,903,716 B2 12/2014 Chen et al.
8,930,191 B2 1/2015 Gruber et al.
8,943,423 B2 1/2015 Merrill et al.
8,972,878 B2 3/2015 David et al.
8,983,383 B1 3/2015 Haskin
8,996,381 B2 3/2015 Mozer et al.
9,009,046 B1 4/2015 Stewart
9,070,366 B1 6/2015 Mathias et al.
9,081,411 B2 7/2015 Kalns et al.
9,081,482 B1 7/2015 Zhai et al.
9,098,467 B1 8/2015 Blanksteen et al.
9,123,338 B1 9/2015 Sanders et al.
9,190,062 B2 11/2015 Haughay
9,218,809 B2 12/2015 Bellegarda
9,223,537 B2 12/2015 Brown et al.
9,255,812 B2 2/2016 Maeoka et al.
9,258,604 B1 2/2016 Bilobrov et al.
9,292,487 B1 3/2016 Weber
9,299,344 B2 3/2016 Braho et al.
9,305,543 B2 4/2016 Fleizach et al.
9,305,548 B2 4/2016 Kennewick et al.
9,311,912 B1 4/2016 Swietlinski et al.
9,313,317 B1 4/2016 LeBeau et al.
9,318,108 B2 4/2016 Gruber et al.
9,338,493 B2 5/2016 Van Os et al.
9,349,368 B1 5/2016 LeBeau et al.
9,377,871 B2 6/2016 Waddell et al.
9,423,266 B2 8/2016 Clark et al.
9,607,612 B2 * 3/2017 Deleeuw G10L 15/02
2001/0005859 A1 6/2001 Okuyama et al.
2001/0020259 A1 9/2001 Sekiguchi et al.
2001/0023397 A1 * 9/2001 Tajima G10L 15/26
704/231
2001/0027394 A1 10/2001 Theimer
2001/0027396 A1 10/2001 Sato
2001/0029455 A1 10/2001 Chin et al.
2001/0030660 A1 10/2001 Zainoulline
2001/0032080 A1 10/2001 Fukada
2001/0041021 A1 11/2001 Boyle et al.
2001/0042107 A1 11/2001 Palm
2001/0044724 A1 11/2001 Hon et al.
2001/0047264 A1 11/2001 Roundtree
2001/0055963 A1 12/2001 Cloutier
2001/0056342 A1 12/2001 Piehn et al.
2001/0056347 A1 12/2001 Chazan et al.
2002/0001395 A1 1/2002 Davis et al.
2002/0002039 A1 1/2002 Qureshey et al.
2002/0002413 A1 1/2002 Tokue
2002/0002461 A1 1/2002 Tetsumoto
2002/0002465 A1 1/2002 Maes
2002/0004703 A1 1/2002 Gaspard, II
2002/0010581 A1 1/2002 Euler et al.
2002/0010584 A1 1/2002 Schultz et al.
2002/0010589 A1 1/2002 Nashida et al.
2002/0010726 A1 1/2002 Rogson
2002/0010798 A1 1/2002 Ben-Shaul et al.
2002/0013707 A1 1/2002 Shaw et al.
2002/0013784 A1 1/2002 Swanson
2002/0013852 A1 1/2002 Janik
2002/0015024 A1 2/2002 Westerman et al.
2002/0015064 A1 2/2002 Robotham et al.
2002/0021278 A1 2/2002 Hinckley et al.
2002/0026315 A1 2/2002 Miranda
2002/0026456 A1 2/2002 Bradford
2002/0031254 A1 3/2002 Lantrip et al.

(56) **References Cited**

U.S. PATENT DOCUMENTS

2002/0031262 A1 3/2002 Imagawa et al.
2002/0032048 A1 3/2002 Kitao et al.
2002/0032564 A1 3/2002 Ehsani et al.
2002/0032591 A1 3/2002 Mahaffy et al.
2002/0032751 A1 3/2002 Bharadwaj
2002/0035467 A1 3/2002 Morimoto et al.
2002/0035469 A1 3/2002 Holzapfel
2002/0035474 A1 3/2002 Alpdemir
2002/0040297 A1 4/2002 Tsiao et al.
2002/0040359 A1 4/2002 Green et al.
2002/0042707 A1 4/2002 Zhao et al.
2002/0045438 A1 4/2002 Tagawa et al.
2002/0045961 A1 4/2002 Gibbs et al.
2002/0046025 A1 4/2002 Hain
2002/0046315 A1 4/2002 Miller et al.
2002/0052730 A1 5/2002 Nakao
2002/0052740 A1 5/2002 Charlesworth et al.
2002/0052746 A1 5/2002 Handelman
2002/0052747 A1 5/2002 Sarukkai
2002/0052913 A1 5/2002 Yamada et al.
2002/0054094 A1 5/2002 Matsuda
2002/0055844 A1 5/2002 L'Esperance et al.
2002/0055934 A1 5/2002 Lipscomb et al.
2002/0057293 A1 5/2002 Liao
2002/0059066 A1 5/2002 O'hagan
2002/0059068 A1 5/2002 Rose et al.
2002/0065659 A1 5/2002 Isono et al.
2002/0065797 A1 5/2002 Meidan et al.
2002/0067308 A1 6/2002 Robertson
2002/0069063 A1 6/2002 Buchner et al.
2002/0069071 A1 6/2002 Knockeart et al.
2002/0069220 A1 6/2002 Tran
2002/0072816 A1 6/2002 Shdema et al.
2002/0072908 A1 6/2002 Case et al.
2002/0072914 A1 6/2002 Alshawi et al.
2002/0072915 A1 6/2002 Bower
2002/0073177 A1 6/2002 Clark et al.
2002/0077082 A1 6/2002 Cruickshank
2002/0077817 A1 6/2002 Atal
2002/0078041 A1 6/2002 Wu
2002/0080163 A1 6/2002 Morey
2002/0083068 A1 6/2002 Quass et al.
2002/0085037 A1 7/2002 Leavitt et al.
2002/0086680 A1 7/2002 Hunzinger
2002/0087306 A1 7/2002 Lee et al.
2002/0087508 A1 7/2002 Hull et al.
2002/0087974 A1 7/2002 Sprague et al.
2002/0091511 A1 7/2002 Hellwig et al.
2002/0091529 A1 7/2002 Whitham
2002/0095286 A1 7/2002 Ross et al.
2002/0095290 A1 7/2002 Kahn et al.
2002/0099547 A1 7/2002 Chu et al.
2002/0099552 A1 7/2002 Rubin et al.
2002/0101447 A1 8/2002 Carro
2002/0103641 A1 8/2002 Kuo et al.
2002/0103644 A1 8/2002 Brocious et al.
2002/0103646 A1 8/2002 Kochanski et al.
2002/0107684 A1 8/2002 Gao
2002/0109709 A1 8/2002 Sagar
2002/0110248 A1 8/2002 Kovales et al.
2002/0111198 A1 8/2002 Heie et al.
2002/0111810 A1 8/2002 Khan et al.
2002/0116082 A1 8/2002 Gudorf
2002/0116171 A1 8/2002 Russell
2002/0116185 A1 8/2002 Cooper et al.
2002/0116189 A1 8/2002 Yeh et al.
2002/0116420 A1 8/2002 Allam et al.
2002/0117384 A1 8/2002 Marchant
2002/0120697 A1 8/2002 Generous et al.
2002/0120925 A1 8/2002 Logan
2002/0122053 A1 9/2002 Dutta et al.
2002/0123891 A1 9/2002 Epstein et al.
2002/0123894 A1 9/2002 Woodward
2002/0126097 A1 9/2002 Savolainen
2002/0128821 A1 9/2002 Ehsani et al.
2002/0128827 A1 9/2002 Bu et al.
2002/0128840 A1 9/2002 Hinde et al.
2002/0129057 A1 9/2002 Spielberg
2002/0133347 A1 9/2002 Schoneburg et al.
2002/0133348 A1 9/2002 Pearson et al.
2002/0135565 A1 9/2002 Gordon et al.
2002/0135618 A1 9/2002 Maes et al.
2002/0137505 A1 9/2002 Eiche et al.
2002/0138254 A1 9/2002 Isaka et al.
2002/0138265 A1 9/2002 Stevens et al.
2002/0138270 A1 9/2002 Bellegarda et al.
2002/0138616 A1 9/2002 Basson et al.
2002/0140679 A1 10/2002 Wen
2002/0143533 A1 10/2002 Lucas et al.
2002/0143542 A1 10/2002 Eide
2002/0143551 A1 10/2002 Sharma et al.
2002/0143826 A1 10/2002 Day et al.
2002/0151297 A1 10/2002 Remboski et al.
2002/0152045 A1 10/2002 Dowling et al.
2002/0152255 A1 10/2002 Smith et al.
2002/0154160 A1 10/2002 Hosokawa
2002/0156771 A1 10/2002 Frieder et al.
2002/0161865 A1 10/2002 Nguyen
2002/0163544 A1 11/2002 Baker et al.
2002/0164000 A1 11/2002 Cohen et al.
2002/0165918 A1 11/2002 Bettis
2002/0166123 A1 11/2002 Schrader et al.
2002/0167534 A1 11/2002 Burke
2002/0169592 A1 11/2002 Aityan
2002/0169605 A1 11/2002 Damiba et al.
2002/0173273 A1 11/2002 Spurgat et al.
2002/0173889 A1 11/2002 Odinak et al.
2002/0173961 A1 11/2002 Guerra
2002/0173962 A1 11/2002 Tang et al.
2002/0173966 A1 11/2002 Henton
2002/0177993 A1 11/2002 Veditz et al.
2002/0184003 A1 12/2002 Hakkinen et al.
2002/0184015 A1 12/2002 Li et al.
2002/0184027 A1 12/2002 Brittan et al.
2002/0184189 A1 12/2002 Hay et al.
2002/0189426 A1 12/2002 Hirade et al.
2002/0191029 A1 12/2002 Gillespie et al.
2002/0193996 A1 12/2002 Squibbs et al.
2002/0196911 A1 12/2002 Gao et al.
2002/0198714 A1 12/2002 Zhou
2002/0198715 A1 12/2002 Belrose
2003/0001881 A1 1/2003 Mannheimer et al.
2003/0002632 A1 1/2003 Bhogal et al.
2003/0003609 A1 1/2003 Sauer et al.
2003/0003897 A1 1/2003 Seung-Taek
2003/0004968 A1 1/2003 Romer et al.
2003/0009459 A1 1/2003 Chastain et al.
2003/0013483 A1 1/2003 Ausems et al.
2003/0016770 A1 1/2003 Trans et al.
2003/0018475 A1 1/2003 Basu et al.
2003/0020760 A1 1/2003 Takatsu et al.
2003/0023420 A1 1/2003 Goodman et al.
2003/0023426 A1 1/2003 Pun et al.
2003/0025676 A1 2/2003 Cappendijk
2003/0026392 A1 2/2003 Brown et al.
2003/0026402 A1 2/2003 Clapper
2003/0028380 A1 2/2003 Freeland et al.
2003/0030645 A1 2/2003 Ribak et al.
2003/0033148 A1 2/2003 Silverman et al.
2003/0033152 A1 2/2003 Cameron
2003/0033153 A1 2/2003 Olson et al.
2003/0033214 A1 2/2003 Mikkelsen et al.
2003/0036909 A1 2/2003 Kato
2003/0037073 A1 2/2003 Tokuda et al.
2003/0037077 A1 2/2003 Brill et al.
2003/0037254 A1 2/2003 Fischer et al.
2003/0038786 A1 2/2003 Nguyen et al.
2003/0040908 A1 2/2003 Yang et al.
2003/0046075 A1 3/2003 Stone
2003/0046401 A1 3/2003 Abbott et al.
2003/0046434 A1 3/2003 Flanagin et al.
2003/0048881 A1 3/2003 Trajkovic et al.
2003/0050781 A1 3/2003 Tamura et al.
2003/0051136 A1 3/2003 Curtis et al.

(56) **References Cited**

U.S. PATENT DOCUMENTS

2003/0055537 A1 3/2003 Odinak et al.
2003/0055623 A1 3/2003 Epstein et al.
2003/0061317 A1 3/2003 Brown et al.
2003/0061570 A1 3/2003 Hatori et al.
2003/0063073 A1 4/2003 Geaghan et al.
2003/0069893 A1 4/2003 Kanai et al.
2003/0074195 A1 4/2003 Bartosik et al.
2003/0074198 A1 4/2003 Sussman
2003/0074457 A1 4/2003 Kluth
2003/0076301 A1 4/2003 Tsuk et al.
2003/0078766 A1 4/2003 Appelt et al.
2003/0078779 A1 4/2003 Desai et al.
2003/0078780 A1 4/2003 Kochanski et al.
2003/0078969 A1 4/2003 Sprague et al.
2003/0079024 A1 4/2003 Hough et al.
2003/0079038 A1 4/2003 Robbin et al.
2003/0080991 A1 5/2003 Crow et al.
2003/0083113 A1 5/2003 Chua et al.
2003/0083878 A1 5/2003 Lee et al.
2003/0083884 A1 5/2003 Odinak et al.
2003/0084350 A1 5/2003 Eibach et al.
2003/0085870 A1 5/2003 Hinckley
2003/0086699 A1 5/2003 Benyamin et al.
2003/0088414 A1 5/2003 Huang et al.
2003/0088421 A1 5/2003 Maes et al.
2003/0090467 A1 5/2003 Hohl et al.
2003/0090474 A1 5/2003 Schaefer
2003/0095096 A1 5/2003 Robbin et al.
2003/0097210 A1 5/2003 Horst et al.
2003/0097379 A1 5/2003 Ireton
2003/0097407 A1 5/2003 Litwin et al.
2003/0097408 A1 5/2003 Kageyama et al.
2003/0098892 A1 5/2003 Hiipakka
2003/0099335 A1 5/2003 Tanaka et al.
2003/0101045 A1 5/2003 Moffatt et al.
2003/0101054 A1 5/2003 Davis et al.
2003/0115060 A1 6/2003 Junqua et al.
2003/0115064 A1 6/2003 Gusler et al.
2003/0115186 A1 6/2003 Wilkinson et al.
2003/0115552 A1 6/2003 Jahnke et al.
2003/0117365 A1 6/2003 Shteyn
2003/0120494 A1 6/2003 Jost et al.
2003/0122652 A1 7/2003 Himmelstein et al.
2003/0122787 A1 7/2003 Zimmerman et al.
2003/0125927 A1 7/2003 Seme
2003/0125945 A1 7/2003 Doyle
2003/0125955 A1 7/2003 Arnold et al.
2003/0126559 A1 7/2003 Fuhrmann
2003/0128819 A1 7/2003 Lee et al.
2003/0130847 A1 7/2003 Case et al.
2003/0131320 A1 7/2003 Kumhyr et al.
2003/0133694 A1 7/2003 Yeo
2003/0134678 A1 7/2003 Tanaka
2003/0135501 A1 7/2003 Frerebeau et al.
2003/0135740 A1 7/2003 Talmor et al.
2003/0140088 A1 7/2003 Robinson et al.
2003/0144846 A1 7/2003 Denenberge et al.
2003/0145285 A1 7/2003 Miyahira et al.
2003/0147512 A1 8/2003 Abburi
2003/0149557 A1 8/2003 Cox et al.
2003/0149567 A1 8/2003 Schmitz et al.
2003/0149978 A1 8/2003 Plotnick
2003/0152203 A1 8/2003 Berger et al.
2003/0152894 A1 8/2003 Townshend
2003/0154079 A1 8/2003 Ota et al.
2003/0154081 A1 8/2003 Chu et al.
2003/0157968 A1 8/2003 Boman et al.
2003/0158732 A1 8/2003 Pi et al.
2003/0158735 A1 8/2003 Yamada et al.
2003/0158737 A1 8/2003 Csicsatka
2003/0160702 A1 8/2003 Tanaka
2003/0160830 A1 8/2003 Degross
2003/0163316 A1 8/2003 Addison et al.
2003/0164848 A1 9/2003 Dutta et al.
2003/0167167 A1 9/2003 Gong
2003/0167318 A1 9/2003 Robbin et al.
2003/0167335 A1 9/2003 Alexander
2003/0171928 A1 9/2003 Falcon et al.
2003/0171936 A1 9/2003 Sall et al.
2003/0174830 A1 9/2003 Boyer et al.
2003/0177046 A1 9/2003 Socha-Leialoha et al.
2003/0179222 A1 9/2003 Noma et al.
2003/0182115 A1 9/2003 Malayath et al.
2003/0182131 A1 9/2003 Arnold et al.
2003/0187655 A1 10/2003 Dunsmuir
2003/0187659 A1 10/2003 Cho et al.
2003/0187775 A1 10/2003 Du et al.
2003/0187844 A1 10/2003 Li et al.
2003/0187925 A1 10/2003 Inala et al.
2003/0188005 A1 10/2003 Yoneda et al.
2003/0188192 A1 10/2003 Tang et al.
2003/0190074 A1 10/2003 Loudon et al.
2003/0191625 A1 10/2003 Gorin et al.
2003/0191645 A1 10/2003 Zhou
2003/0193481 A1 10/2003 Sokolsky
2003/0194080 A1 10/2003 Michaelis et al.
2003/0195741 A1 10/2003 Mani et al.
2003/0197736 A1 10/2003 Murphy
2003/0197744 A1 10/2003 Irvine
2003/0200085 A1 10/2003 Nguyen et al.
2003/0200452 A1 10/2003 Tagawa et al.
2003/0200858 A1 10/2003 Xie
2003/0202697 A1 10/2003 Simard et al.
2003/0204392 A1 10/2003 Finnigan et al.
2003/0204492 A1 10/2003 Wolf et al.
2003/0206199 A1 11/2003 Pusa et al.
2003/0208756 A1 11/2003 Macrae et al.
2003/0210266 A1 11/2003 Cragun et al.
2003/0212543 A1 11/2003 Epstein et al.
2003/0212961 A1 11/2003 Soin et al.
2003/0214519 A1 11/2003 Smith et al.
2003/0216919 A1 11/2003 Roushar
2003/0221198 A1 11/2003 Sloo et al.
2003/0224760 A1 12/2003 Day
2003/0228863 A1 12/2003 Vander Veen et al.
2003/0228909 A1 12/2003 Tanaka et al.
2003/0229490 A1 12/2003 Etter
2003/0229616 A1 12/2003 Wong
2003/0233230 A1 12/2003 Ammicht et al.
2003/0233237 A1 12/2003 Garside et al.
2003/0233240 A1 12/2003 Kaatrasalo
2003/0234824 A1 12/2003 Litwiller
2003/0236663 A1 12/2003 Dimitrova et al.
2004/0001396 A1 1/2004 Keller et al.
2004/0006467 A1 1/2004 Anisimovich et al.
2004/0008277 A1 1/2004 Nagaishi et al.
2004/0010484 A1 1/2004 Foulger et al.
2004/0012556 A1 1/2004 Yong et al.
2004/0013252 A1 1/2004 Craner
2004/0015342 A1 1/2004 Garst et al.
2004/0021676 A1 2/2004 Chen et al.
2004/0022369 A1 2/2004 Vitikainen et al.
2004/0022373 A1 2/2004 Suder et al.
2004/0023643 A1 2/2004 Vander Veen et al.
2004/0030551 A1 2/2004 Marcu et al.
2004/0030554 A1 2/2004 Boxberger-Oberoi et al.
2004/0030556 A1 2/2004 Bennett
2004/0030559 A1 2/2004 Payne et al.
2004/0030996 A1 2/2004 Van Liempd et al.
2004/0036715 A1 2/2004 Warren
2004/0048627 A1 3/2004 Olvera-Hernandez
2004/0049388 A1 3/2004 Roth et al.
2004/0049391 A1 3/2004 Polanyi et al.
2004/0051729 A1 3/2004 Borden, IV
2004/0052338 A1 3/2004 Celi, Jr. et al.
2004/0054530 A1 3/2004 Davis et al.
2004/0054533 A1 3/2004 Bellegarda
2004/0054534 A1 3/2004 Junqua
2004/0054535 A1 3/2004 Mackie et al.
2004/0054541 A1 3/2004 Kryze et al.
2004/0054690 A1 3/2004 Hillerbrand et al.
2004/0055446 A1 3/2004 Robbin et al.
2004/0056899 A1 3/2004 Sinclair, II et al.
2004/0059577 A1 3/2004 Pickering

(56) **References Cited**

U.S. PATENT DOCUMENTS

2004/0059790 A1 3/2004 Austin-Lane et al.
2004/0061717 A1 4/2004 Menon et al.
2004/0062367 A1 4/2004 Fellenstein et al.
2004/0064593 A1 4/2004 Sinclair et al.
2004/0069122 A1 4/2004 Wilson
2004/0070567 A1 4/2004 Longe et al.
2004/0070612 A1 4/2004 Sinclair et al.
2004/0073427 A1 4/2004 Moore
2004/0073428 A1 4/2004 Zlokarnik et al.
2004/0076086 A1 4/2004 Keller et al.
2004/0078382 A1 4/2004 Mercer et al.
2004/0085162 A1 5/2004 Agarwal et al.
2004/0085368 A1 5/2004 Johnson, Jr. et al.
2004/0086120 A1 5/2004 Akins, III et al.
2004/0093213 A1 5/2004 Conkie
2004/0093215 A1 5/2004 Gupta et al.
2004/0093328 A1 5/2004 Damle
2004/0094018 A1 5/2004 Ueshima et al.
2004/0096105 A1 5/2004 Holtsberg
2004/0098250 A1 5/2004 Kimchi et al.
2004/0100479 A1 5/2004 Nakano et al.
2004/0106432 A1 6/2004 Kanamori et al.
2004/0107169 A1 6/2004 Lowe
2004/0111266 A1 6/2004 Coorman et al.
2004/0111332 A1 6/2004 Baar et al.
2004/0114731 A1 6/2004 Gillett et al.
2004/0120476 A1 6/2004 Harrison et al.
2004/0122656 A1 6/2004 Abir
2004/0122664 A1 6/2004 Lorenzo et al.
2004/0122673 A1 6/2004 Park et al.
2004/0124583 A1 7/2004 Landis
2004/0125088 A1 7/2004 Zimmerman et al.
2004/0125922 A1 7/2004 Specht
2004/0127198 A1 7/2004 Roskind et al.
2004/0127241 A1 7/2004 Shostak
2004/0128137 A1 7/2004 Bush et al.
2004/0128614 A1 7/2004 Andrews et al.
2004/0133817 A1 7/2004 Choi
2004/0135701 A1 7/2004 Yasuda et al.
2004/0135774 A1 7/2004 La Monica
2004/0136510 A1 7/2004 Vander Veen
2004/0138869 A1 7/2004 Heinecke
2004/0145607 A1 7/2004 Alderson
2004/0153306 A1 8/2004 Tanner et al.
2004/0155869 A1 8/2004 Robinson et al.
2004/0160419 A1 8/2004 Padgitt
2004/0162741 A1 8/2004 Flaxer et al.
2004/0170379 A1 9/2004 Yao et al.
2004/0174399 A1 9/2004 Wu et al.
2004/0174434 A1 9/2004 Walker et al.
2004/0176958 A1 9/2004 Salmenkaita et al.
2004/0177319 A1 9/2004 Horn
2004/0178994 A1 9/2004 Kairls, Jr.
2004/0181392 A1 9/2004 Parikh et al.
2004/0183833 A1 9/2004 Chua
2004/0186713 A1 9/2004 Gomas et al.
2004/0186714 A1 9/2004 Baker
2004/0186777 A1 9/2004 Margiloff et al.
2004/0186857 A1 9/2004 Serlet et al.
2004/0193398 A1 9/2004 Chu et al.
2004/0193420 A1 9/2004 Kennewick et al.
2004/0193421 A1 9/2004 Blass
2004/0193426 A1 9/2004 Maddux et al.
2004/0196256 A1 10/2004 Wobbrock et al.
2004/0198436 A1 10/2004 Alden
2004/0199375 A1 10/2004 Ehsani et al.
2004/0199387 A1 10/2004 Wang et al.
2004/0199663 A1 10/2004 Horvitz et al.
2004/0203520 A1 10/2004 Schirtzinger et al.
2004/0205151 A1 10/2004 Sprigg et al.
2004/0205671 A1 10/2004 Sukehiro et al.
2004/0208302 A1 10/2004 Urban et al.
2004/0210442 A1 10/2004 Glynn et al.
2004/0210634 A1 10/2004 Ferrer et al.
2004/0213419 A1 10/2004 Varma et al.
2004/0215731 A1 10/2004 Tzann-en Szeto
2004/0216049 A1 10/2004 Lewis et al.
2004/0218451 A1 11/2004 Said et al.
2004/0220798 A1 11/2004 Chi et al.
2004/0220809 A1 11/2004 Wang et al.
2004/0221235 A1 11/2004 Marchisio et al.
2004/0223485 A1 11/2004 Arellano et al.
2004/0223599 A1 11/2004 Bear et al.
2004/0224638 A1 11/2004 Fadell et al.
2004/0225501 A1 11/2004 Cutaia et al.
2004/0225504 A1 11/2004 Junqua et al.
2004/0225650 A1 11/2004 Cooper et al.
2004/0225746 A1 11/2004 Niell et al.
2004/0230420 A1 11/2004 Kadambe et al.
2004/0230637 A1 11/2004 Lecoueche et al.
2004/0236778 A1 11/2004 Junqua et al.
2004/0242286 A1 12/2004 Benco et al.
2004/0243412 A1 12/2004 Gupta et al.
2004/0243419 A1 12/2004 Wang
2004/0249629 A1 12/2004 Webster
2004/0249637 A1 12/2004 Baker et al.
2004/0249667 A1 12/2004 Oon
2004/0252119 A1 12/2004 Hunleth et al.
2004/0252604 A1 12/2004 Johnson et al.
2004/0252966 A1 12/2004 Holloway et al.
2004/0254791 A1 12/2004 Coifman et al.
2004/0254792 A1 12/2004 Busayapongchai et al.
2004/0257432 A1 12/2004 Girish et al.
2004/0259536 A1 12/2004 Keskar et al.
2004/0260438 A1 12/2004 Chernetsky et al.
2004/0260547 A1 12/2004 Cohen et al.
2004/0260718 A1 12/2004 Fedorov et al.
2004/0261023 A1 12/2004 Bier
2004/0262051 A1 12/2004 Carro
2004/0263636 A1 12/2004 Cutler et al.
2004/0267825 A1 12/2004 Novak et al.
2004/0268253 A1 12/2004 Demello et al.
2004/0268262 A1 12/2004 Gupta et al.
2005/0002507 A1 1/2005 Timmins et al.
2005/0010409 A1 1/2005 Hull et al.
2005/0012723 A1 1/2005 Pallakoff
2005/0015254 A1 1/2005 Beaman
2005/0015751 A1 1/2005 Grassens
2005/0015772 A1 1/2005 Saare et al.
2005/0021330 A1 1/2005 Mano et al.
2005/0022114 A1 1/2005 Shanahan et al.
2005/0024341 A1 2/2005 Gillespie et al.
2005/0024345 A1 2/2005 Eastty et al.
2005/0027385 A1 2/2005 Yueh
2005/0030175 A1 2/2005 Wolfe
2005/0031106 A1 2/2005 Henderson
2005/0033582 A1 2/2005 Gadd et al.
2005/0033771 A1 2/2005 Schmitter et al.
2005/0034164 A1 2/2005 Sano et al.
2005/0038657 A1 2/2005 Roth et al.
2005/0039141 A1 2/2005 Burke et al.
2005/0042591 A1 2/2005 Bloom et al.
2005/0043946 A1 2/2005 Ueyama et al.
2005/0043949 A1 2/2005 Roth et al.
2005/0044569 A1 2/2005 Marcus
2005/0045373 A1 3/2005 Born
2005/0049862 A1 3/2005 Choi et al.
2005/0049870 A1 3/2005 Zhang et al.
2005/0049880 A1 3/2005 Roth et al.
2005/0055212 A1 3/2005 Nagao
2005/0055403 A1 3/2005 Brittan
2005/0058438 A1 3/2005 Hayashi
2005/0060155 A1 3/2005 Chu et al.
2005/0071165 A1 3/2005 Hofstader et al.
2005/0071332 A1 3/2005 Ortega et al.
2005/0071437 A1 3/2005 Bear et al.
2005/0074113 A1 4/2005 Mathew et al.
2005/0075881 A1 4/2005 Rigazio et al.
2005/0080613 A1 4/2005 Colledge et al.
2005/0080620 A1 4/2005 Rao et al.
2005/0080625 A1 4/2005 Bennett et al.
2005/0080632 A1 4/2005 Endo et al.
2005/0080780 A1 4/2005 Colledge et al.
2005/0086059 A1 4/2005 Bennett

(56) **References Cited**

U.S. PATENT DOCUMENTS

2005/0086255 A1 4/2005 Schran et al.
2005/0086605 A1 4/2005 Ferrer et al.
2005/0091118 A1 4/2005 Fano
2005/0094475 A1 5/2005 Naoi
2005/0099398 A1 5/2005 Garside et al.
2005/0100214 A1 5/2005 Zhang et al.
2005/0102144 A1 5/2005 Rapoport
2005/0102614 A1 5/2005 Brockett et al.
2005/0102625 A1 5/2005 Lee et al.
2005/0105712 A1 5/2005 Williams et al.
2005/0108001 A1 5/2005 Aarskog
2005/0108017 A1 5/2005 Esser et al.
2005/0108074 A1 5/2005 Bloechl et al.
2005/0108338 A1 5/2005 Simske et al.
2005/0108344 A1 5/2005 Tafoya et al.
2005/0108642 A1 5/2005 Sinclair et al.
2005/0114124 A1 5/2005 Liu et al.
2005/0114140 A1 5/2005 Brackett et al.
2005/0114306 A1 5/2005 Shu et al.
2005/0114791 A1 5/2005 Bollenbacher et al.
2005/0119890 A1 6/2005 Hirose
2005/0119897 A1 6/2005 Bennett et al.
2005/0125216 A1 6/2005 Chitrapura et al.
2005/0125226 A1 6/2005 Magee
2005/0125235 A1 6/2005 Lazay et al.
2005/0131951 A1 6/2005 Zhang et al.
2005/0132301 A1 6/2005 Ikeda
2005/0136949 A1 6/2005 Barnes, Jr.
2005/0138305 A1 6/2005 Zellner
2005/0140504 A1 6/2005 Marshall et al.
2005/0143972 A1 6/2005 Gopalakrishnan et al.
2005/0144003 A1 6/2005 Iso-Sipila
2005/0144070 A1 6/2005 Cheshire
2005/0144568 A1 6/2005 Gruen et al.
2005/0148356 A1 7/2005 Ferguson et al.
2005/0149214 A1 7/2005 Yoo et al.
2005/0149330 A1 7/2005 Katae
2005/0149332 A1 7/2005 Kuzunuki et al.
2005/0149510 A1 7/2005 Shafrir
2005/0152558 A1 7/2005 Van Tassel
2005/0152602 A1 7/2005 Chen et al.
2005/0154578 A1 7/2005 Tong et al.
2005/0154580 A1 7/2005 Horowitz et al.
2005/0154591 A1 7/2005 Lecoeuche
2005/0159939 A1 7/2005 Mohler et al.
2005/0159957 A1 7/2005 Roth et al.
2005/0162395 A1 7/2005 Unruh
2005/0165015 A1 7/2005 Ncube et al.
2005/0165607 A1 7/2005 Di Fabbrizio et al.
2005/0166153 A1 7/2005 Eytchison et al.
2005/0177445 A1 8/2005 Church
2005/0181770 A1 8/2005 Helferich
2005/0182616 A1 8/2005 Kotipalli
2005/0182627 A1 8/2005 Tanaka et al.
2005/0182628 A1 8/2005 Choi
2005/0182629 A1 8/2005 Coorman et al.
2005/0182630 A1 8/2005 Miro et al.
2005/0182765 A1 8/2005 Liddy
2005/0184958 A1 8/2005 Gnanamgari et al.
2005/0187770 A1 8/2005 Kompe et al.
2005/0187773 A1 8/2005 Filoche et al.
2005/0190970 A1 9/2005 Griffin
2005/0192801 A1 9/2005 Lewis et al.
2005/0192812 A1 9/2005 Buchholz et al.
2005/0195077 A1 9/2005 Mcculloch et al.
2005/0195429 A1 9/2005 Archbold
2005/0196733 A1 9/2005 Budra et al.
2005/0201572 A1 9/2005 Lindahl et al.
2005/0202854 A1 9/2005 Kortum et al.
2005/0203738 A1 9/2005 Hwang
2005/0203747 A1 9/2005 Lecoeuche
2005/0203991 A1 9/2005 Kawamura et al.
2005/0209848 A1 9/2005 Ishii
2005/0210394 A1 9/2005 Crandall et al.
2005/0216331 A1 9/2005 Ahrens et al.
2005/0222843 A1 10/2005 Kahn et al.
2005/0222973 A1 10/2005 Kaiser
2005/0228665 A1 10/2005 Kobayashi et al.
2005/0245243 A1 11/2005 Zuniga
2005/0246350 A1 11/2005 Canaran
2005/0246365 A1 11/2005 Lowles et al.
2005/0246686 A1 11/2005 Seshadri et al.
2005/0246726 A1 11/2005 Labrou et al.
2005/0251572 A1 11/2005 McMahan et al.
2005/0254481 A1 11/2005 Vishik et al.
2005/0261901 A1 11/2005 Davis et al.
2005/0262440 A1 11/2005 Stanciu et al.
2005/0267738 A1 12/2005 Wilkinson et al.
2005/0267757 A1 12/2005 Iso-Sipila et al.
2005/0268247 A1 12/2005 Baneth
2005/0271216 A1 12/2005 Lashkari
2005/0273332 A1 12/2005 Scott et al.
2005/0273337 A1 12/2005 Erell et al.
2005/0273626 A1 12/2005 Pearson et al.
2005/0278297 A1 12/2005 Nelson
2005/0278643 A1 12/2005 Ukai et al.
2005/0278647 A1 12/2005 Leavitt et al.
2005/0283363 A1 12/2005 Weng et al.
2005/0283364 A1 12/2005 Longe et al.
2005/0283726 A1 12/2005 Lunati
2005/0283729 A1 12/2005 Morris et al.
2005/0288934 A1 12/2005 Omi
2005/0288936 A1 12/2005 Busayapongchai et al.
2005/0289458 A1 12/2005 Kylmanen
2005/0289463 A1 12/2005 Wu et al.
2006/0001652 A1 1/2006 Chiu et al.
2006/0004570 A1 1/2006 Ju et al.
2006/0004640 A1 1/2006 Swierczek
2006/0004744 A1 1/2006 Nevidomski et al.
2006/0007174 A1 1/2006 Shen
2006/0009973 A1 1/2006 Nguyen et al.
2006/0013414 A1 1/2006 Shih
2006/0013446 A1 1/2006 Stephens
2006/0015326 A1 1/2006 Mori et al.
2006/0015341 A1 1/2006 Baker
2006/0015484 A1 1/2006 Weng et al.
2006/0015819 A1 1/2006 Hawkins et al.
2006/0018446 A1 1/2006 Schmandt et al.
2006/0018492 A1 1/2006 Chiu et al.
2006/0020890 A1 1/2006 Kroll et al.
2006/0025999 A1 2/2006 Feng et al.
2006/0026233 A1 2/2006 Tenembaum et al.
2006/0026521 A1 2/2006 Hotelling et al.
2006/0026535 A1 2/2006 Hotelling et al.
2006/0026536 A1 2/2006 Hotelling et al.
2006/0033724 A1 2/2006 Chaudhri et al.
2006/0035632 A1 2/2006 Sorvari et al.
2006/0036946 A1 2/2006 Radtke et al.
2006/0041424 A1 2/2006 Todhunter et al.
2006/0041431 A1 2/2006 Maes
2006/0041590 A1 2/2006 King et al.
2006/0047632 A1 3/2006 Zhang
2006/0050865 A1 3/2006 Kortum et al.
2006/0052141 A1 3/2006 Suzuki
2006/0053007 A1 3/2006 Niemisto
2006/0053365 A1 3/2006 Hollander et al.
2006/0053379 A1 3/2006 Henderson et al.
2006/0053387 A1 3/2006 Ording
2006/0058999 A1 3/2006 Barker et al.
2006/0059424 A1 3/2006 Petri et al.
2006/0059437 A1 3/2006 Conklin
2006/0060762 A1 3/2006 Chan et al.
2006/0061488 A1 3/2006 Dunton
2006/0064693 A1 3/2006 Messer et al.
2006/0067535 A1 3/2006 Culbert et al.
2006/0067536 A1 3/2006 Culbert et al.
2006/0069567 A1 3/2006 Tischer et al.
2006/0069664 A1 3/2006 Ling et al.
2006/0072248 A1 4/2006 Watanabe et al.
2006/0072716 A1 4/2006 Pham
2006/0074628 A1 4/2006 Elbaz et al.
2006/0074651 A1 4/2006 Arun et al.
2006/0074660 A1 4/2006 Waters et al.
2006/0074674 A1 4/2006 Zhang et al.

(56) **References Cited**

U.S. PATENT DOCUMENTS

2006/0074750 A1 4/2006 Clark et al.
2006/0074898 A1 4/2006 Gavalda et al.
2006/0075429 A1 4/2006 Istvan et al.
2006/0077055 A1 4/2006 Basir
2006/0080098 A1 4/2006 Campbell
2006/0085187 A1 4/2006 Barquilla
2006/0085465 A1 4/2006 Nori et al.
2006/0085757 A1 4/2006 Andre et al.
2006/0093998 A1 5/2006 Vertegaal
2006/0095265 A1 5/2006 Chu et al.
2006/0095790 A1 5/2006 Nguyen et al.
2006/0095846 A1 5/2006 Nurmi
2006/0095848 A1 5/2006 Naik
2006/0097991 A1 5/2006 Hotelling et al.
2006/0100848 A1 5/2006 Cozzi et al.
2006/0100849 A1 5/2006 Chan
2006/0101354 A1 5/2006 Hashimoto et al.
2006/0103633 A1 5/2006 Gioeli
2006/0106592 A1 5/2006 Brockett et al.
2006/0106594 A1 5/2006 Brockett et al.
2006/0106595 A1 5/2006 Brockett et al.
2006/0111906 A1 5/2006 Cross et al.
2006/0111909 A1 5/2006 Maes et al.
2006/0116874 A1 6/2006 Samuelsson et al.
2006/0116877 A1 6/2006 Pickering et al.
2006/0117002 A1 6/2006 Swen
2006/0119582 A1 6/2006 Ng et al.
2006/0122834 A1 6/2006 Bennett
2006/0122836 A1 6/2006 Cross et al.
2006/0129379 A1 6/2006 Ramsey et al.
2006/0129929 A1 6/2006 Weber et al.
2006/0130006 A1 6/2006 Chitale
2006/0132812 A1 6/2006 Barnes et al.
2006/0135214 A1 6/2006 Zhang et al.
2006/0136213 A1 6/2006 Hirose et al.
2006/0136280 A1 6/2006 Cho et al.
2006/0136352 A1 6/2006 Brun et al.
2006/0141990 A1 6/2006 Zak et al.
2006/0142576 A1 6/2006 Meng et al.
2006/0142993 A1 6/2006 Menendez-Pidal et al.
2006/0143007 A1 6/2006 Koh et al.
2006/0143559 A1 6/2006 Spielberg et al.
2006/0143576 A1 6/2006 Gupta et al.
2006/0148520 A1 7/2006 Baker et al.
2006/0149557 A1 7/2006 Kaneko et al.
2006/0149558 A1 7/2006 Kahn et al.
2006/0150087 A1 7/2006 Cronenberger et al.
2006/0152496 A1 7/2006 Knaven
2006/0153040 A1 7/2006 Girish et al.
2006/0156252 A1 7/2006 Sheshagiri et al.
2006/0156307 A1 7/2006 Kunjithapatham et al.
2006/0161870 A1 7/2006 Hotelling et al.
2006/0161871 A1 7/2006 Hotelling et al.
2006/0161872 A1 7/2006 Rytivaara et al.
2006/0165105 A1 7/2006 Shenfield et al.
2006/0167676 A1 7/2006 Plumb
2006/0168150 A1 7/2006 Naik et al.
2006/0168507 A1 7/2006 Hansen
2006/0168539 A1 7/2006 Hawkins et al.
2006/0172720 A1 8/2006 Islam et al.
2006/0173683 A1 8/2006 Roth et al.
2006/0173684 A1 8/2006 Fischer et al.
2006/0174207 A1 8/2006 Deshpande
2006/0178868 A1 8/2006 Billerey-Mosier
2006/0181519 A1 8/2006 Vernier et al.
2006/0183466 A1 8/2006 Lee et al.
2006/0184886 A1 8/2006 Chung et al.
2006/0187073 A1 8/2006 Lin et al.
2006/0190269 A1 8/2006 Tessel et al.
2006/0190436 A1 8/2006 Richardson et al.
2006/0190577 A1 8/2006 Yamada
2006/0193518 A1 8/2006 Dong
2006/0194181 A1 8/2006 Rosenberg
2006/0195206 A1 8/2006 Moon et al.
2006/0195323 A1 8/2006 Monne et al.
2006/0197753 A1 9/2006 Hotelling
2006/0197755 A1 9/2006 Bawany
2006/0200253 A1 9/2006 Hoffberg et al.
2006/0200342 A1 9/2006 Corston-Oliver et al.
2006/0200347 A1 9/2006 Kim et al.
2006/0205432 A1 9/2006 Hawkins et al.
2006/0206313 A1 9/2006 Xu et al.
2006/0206454 A1 9/2006 Forstall et al.
2006/0206724 A1 9/2006 Schaufele et al.
2006/0212415 A1 9/2006 Backer et al.
2006/0217967 A1 9/2006 Goertzen et al.
2006/0218244 A1 9/2006 Rasmussen et al.
2006/0221738 A1 10/2006 Park et al.
2006/0221788 A1 10/2006 Lindahl et al.
2006/0224570 A1 10/2006 Quiroga et al.
2006/0229802 A1 10/2006 Vertelney et al.
2006/0229870 A1 10/2006 Kobal
2006/0229876 A1 10/2006 Aaron et al.
2006/0230350 A1 10/2006 Baluja
2006/0230410 A1 10/2006 Kurganov et al.
2006/0234680 A1 10/2006 Doulton
2006/0235550 A1 10/2006 Csicsatka et al.
2006/0235700 A1 10/2006 Wong et al.
2006/0235841 A1 10/2006 Betz et al.
2006/0236262 A1 10/2006 Bathiche et al.
2006/0239419 A1 10/2006 Joseph et al.
2006/0239471 A1 10/2006 Mao et al.
2006/0240866 A1 10/2006 Eilts et al.
2006/0241948 A1 10/2006 Abrash et al.
2006/0242190 A1 10/2006 Wnek
2006/0246955 A1 11/2006 Nirhamo et al.
2006/0247931 A1 11/2006 Caskey et al.
2006/0252457 A1 11/2006 Schrager
2006/0253210 A1 11/2006 Rosenberg
2006/0253787 A1 11/2006 Fogg
2006/0256934 A1 11/2006 Mazor
2006/0258376 A1 11/2006 Ewell et al.
2006/0262876 A1 11/2006 LaDue
2006/0265208 A1 11/2006 Assadollahi
2006/0265503 A1 11/2006 Jones et al.
2006/0265648 A1 11/2006 Rainisto et al.
2006/0271627 A1 11/2006 Szczepanek
2006/0274051 A1 12/2006 Longe et al.
2006/0274905 A1 12/2006 Lindahl et al.
2006/0277031 A1 12/2006 Ramsey et al.
2006/0277058 A1 12/2006 J''maev et al.
2006/0282264 A1 12/2006 Denny et al.
2006/0282415 A1 12/2006 Shibata et al.
2006/0282455 A1 12/2006 Lee et al.
2006/0286527 A1 12/2006 Morel
2006/0287864 A1 12/2006 Pusa et al.
2006/0288024 A1 12/2006 Braica
2006/0291666 A1 12/2006 Ball et al.
2006/0293876 A1 12/2006 Kamatani et al.
2006/0293880 A1 12/2006 Elshishiny et al.
2006/0293886 A1 12/2006 Odell et al.
2006/0293889 A1 12/2006 Kiss et al.
2007/0003026 A1 1/2007 Hodge et al.
2007/0004451 A1 1/2007 C. Anderson
2007/0005849 A1 1/2007 Oliver
2007/0006098 A1 1/2007 Krumm et al.
2007/0011154 A1 1/2007 Musgrove et al.
2007/0014280 A1 1/2007 Cormier et al.
2007/0016563 A1 1/2007 Omoigui
2007/0016865 A1 1/2007 Johnson et al.
2007/0021956 A1 1/2007 Qu et al.
2007/0022380 A1 1/2007 Swartz et al.
2007/0025704 A1 2/2007 Tsukazaki et al.
2007/0026852 A1 2/2007 Logan et al.
2007/0027732 A1 2/2007 Hudgens
2007/0028009 A1 2/2007 Robbin et al.
2007/0030824 A1 2/2007 Ribaudo et al.
2007/0032247 A1 2/2007 Shaffer et al.
2007/0033003 A1 2/2007 Morris
2007/0033005 A1 2/2007 Cristo et al.
2007/0033026 A1 2/2007 Bartosik et al.
2007/0033054 A1 2/2007 Snitkovskiy et al.
2007/0036117 A1 2/2007 Taube et al.
2007/0036286 A1 2/2007 Champlin et al.

(56) **References Cited**

U.S. PATENT DOCUMENTS

2007/0036294 A1 2/2007 Chaudhuri et al.
2007/0038436 A1 2/2007 Cristoe et al.
2007/0038609 A1 2/2007 Wu
2007/0040813 A1 2/2007 Kushler et al.
2007/0041361 A1 2/2007 Iso-Sipila
2007/0042812 A1 2/2007 Basir et al.
2007/0043568 A1 2/2007 Dhanakshirur et al.
2007/0043687 A1 2/2007 Bodart et al.
2007/0043820 A1 2/2007 George et al.
2007/0044038 A1 2/2007 Horentrup et al.
2007/0046641 A1 3/2007 Lim
2007/0047719 A1 3/2007 Dhawan et al.
2007/0050184 A1 3/2007 Drucker et al.
2007/0050191 A1 3/2007 Weider et al.
2007/0050393 A1 3/2007 Vogel et al.
2007/0050712 A1 3/2007 Hull et al.
2007/0052586 A1 3/2007 Horstemeyer
2007/0055493 A1 3/2007 Lee
2007/0055508 A1 3/2007 Zhao et al.
2007/0055514 A1 3/2007 Beattie et al.
2007/0055525 A1 3/2007 Kennewick et al.
2007/0055529 A1 3/2007 Kanevsky et al.
2007/0058832 A1 3/2007 Hug et al.
2007/0060107 A1 3/2007 Day
2007/0060118 A1 3/2007 Guyette
2007/0061487 A1 3/2007 Moore et al.
2007/0061712 A1 3/2007 Bodin et al.
2007/0061754 A1 3/2007 Ardhanari et al.
2007/0067173 A1 3/2007 Bellegarda
2007/0067272 A1 3/2007 Flynt et al.
2007/0073540 A1 3/2007 Hirakawa et al.
2007/0073541 A1 3/2007 Tian
2007/0073745 A1 3/2007 Scott et al.
2007/0074131 A1 3/2007 Assadollahi et al.
2007/0075965 A1 4/2007 Huppi et al.
2007/0079027 A1 4/2007 Marriott et al.
2007/0080936 A1 4/2007 Tsuk et al.
2007/0083467 A1 4/2007 Lindahl et al.
2007/0083623 A1 4/2007 Nishimura et al.
2007/0088556 A1 4/2007 Andrew
2007/0089132 A1 4/2007 Qureshey et al.
2007/0089135 A1 4/2007 Qureshey et al.
2007/0093277 A1 4/2007 Cavacuiti et al.
2007/0094026 A1 4/2007 Ativanichayaphong et al.
2007/0098195 A1 5/2007 Holmes
2007/0100206 A1 5/2007 Lin et al.
2007/0100602 A1 5/2007 Kim
2007/0100619 A1 5/2007 Purho et al.
2007/0100624 A1 5/2007 Weng et al.
2007/0100635 A1 5/2007 Mahajan et al.
2007/0100709 A1 5/2007 Lee et al.
2007/0100790 A1 5/2007 Cheyer et al.
2007/0100814 A1 5/2007 Lee et al.
2007/0100883 A1 5/2007 Rose et al.
2007/0106491 A1 5/2007 Carter et al.
2007/0106497 A1 5/2007 Ramsey et al.
2007/0106512 A1 5/2007 Acero et al.
2007/0106513 A1 5/2007 Boillot et al.
2007/0106657 A1 5/2007 Brzeski et al.
2007/0106674 A1 5/2007 Agrawal et al.
2007/0106685 A1 5/2007 Houh et al.
2007/0112562 A1 5/2007 Vainio et al.
2007/0116195 A1 5/2007 Thompson et al.
2007/0118351 A1 5/2007 Sumita
2007/0118377 A1 5/2007 Badino et al.
2007/0118378 A1 5/2007 Skuratovsky
2007/0121846 A1 5/2007 Altberg et al.
2007/0124131 A1 5/2007 Chino et al.
2007/0124132 A1 5/2007 Takeuchi et al.
2007/0124149 A1 5/2007 Shen et al.
2007/0124291 A1 5/2007 Hassan et al.
2007/0124676 A1 5/2007 Amundsen et al.
2007/0127888 A1 6/2007 Hayashi et al.
2007/0128777 A1 6/2007 Yin et al.
2007/0129059 A1 6/2007 Nadarajah et al.
2007/0130014 A1 6/2007 Altberg et al.
2007/0130128 A1 6/2007 Garg et al.
2007/0132738 A1 6/2007 Lowles et al.
2007/0133771 A1 6/2007 Stifelman et al.
2007/0135187 A1 6/2007 Kreiner et al.
2007/0135949 A1 6/2007 Snover et al.
2007/0136064 A1 6/2007 Carroll
2007/0136778 A1 6/2007 Birger et al.
2007/0143163 A1 6/2007 Weiss et al.
2007/0149252 A1 6/2007 Jobs et al.
2007/0150403 A1 6/2007 Mock et al.
2007/0150444 A1 6/2007 Chesnais et al.
2007/0150842 A1 6/2007 Chaudhri et al.
2007/0152978 A1 7/2007 Kocienda et al.
2007/0152980 A1 7/2007 Kocienda et al.
2007/0155346 A1 7/2007 Mijatovic et al.
2007/0156410 A1 7/2007 Stohr et al.
2007/0156627 A1 7/2007 D'Alicandro
2007/0157089 A1 7/2007 Van Os et al.
2007/0157268 A1 7/2007 Girish et al.
2007/0162274 A1 7/2007 Ruiz et al.
2007/0162296 A1 7/2007 Altberg et al.
2007/0162414 A1 7/2007 Horowitz et al.
2007/0165003 A1 7/2007 Fux et al.
2007/0167136 A1 7/2007 Groth
2007/0168922 A1 7/2007 Kaiser et al.
2007/0173233 A1 7/2007 Vander Veen et al.
2007/0173267 A1 7/2007 Klassen et al.
2007/0174057 A1 7/2007 Genly
2007/0174188 A1 7/2007 Fish
2007/0174350 A1 7/2007 Pell et al.
2007/0174396 A1 7/2007 Kumar et al.
2007/0179776 A1 8/2007 Segond et al.
2007/0179778 A1 8/2007 Gong et al.
2007/0180383 A1 8/2007 Naik
2007/0182595 A1 8/2007 Ghasabian
2007/0185551 A1 8/2007 Meadows et al.
2007/0185754 A1 8/2007 Schmidt
2007/0185831 A1 8/2007 Churcher
2007/0185917 A1 8/2007 Prahlad et al.
2007/0188901 A1 8/2007 Heckerman et al.
2007/0192026 A1 8/2007 Lee et al.
2007/0192027 A1 8/2007 Lee et al.
2007/0192105 A1 8/2007 Neeracher et al.
2007/0192179 A1 8/2007 Van et al.
2007/0192293 A1 8/2007 Swen
2007/0192403 A1 8/2007 Heine et al.
2007/0192744 A1 8/2007 Reponen
2007/0198267 A1 8/2007 Jones et al.
2007/0198269 A1 8/2007 Braho et al.
2007/0198273 A1 8/2007 Hennecke
2007/0198566 A1 8/2007 Sustik
2007/0203955 A1 8/2007 Pomerantz
2007/0207785 A1 9/2007 Chatterjee et al.
2007/0208555 A1 9/2007 Blass et al.
2007/0208569 A1 9/2007 Subramanian et al.
2007/0208579 A1 9/2007 Peterson
2007/0208726 A1 9/2007 Krishnaprasad et al.
2007/0211071 A1 9/2007 Slotznick et al.
2007/0213099 A1 9/2007 Bast
2007/0213857 A1 9/2007 Bodin et al.
2007/0213984 A1 9/2007 Ativanichayaphong et al.
2007/0217693 A1 9/2007 Kretzschmar, Jr.
2007/0219645 A1 9/2007 Thomas et al.
2007/0219777 A1 9/2007 Chu et al.
2007/0219801 A1 9/2007 Sundaram et al.
2007/0219803 A1 9/2007 Chiu et al.
2007/0219983 A1 9/2007 Fish
2007/0225980 A1 9/2007 Sumita
2007/0225984 A1 9/2007 Milstein et al.
2007/0226652 A1 9/2007 Kikuchi et al.
2007/0229323 A1 10/2007 Plachta et al.
2007/0230729 A1 10/2007 Naylor et al.
2007/0233484 A1 10/2007 Coelho et al.
2007/0233487 A1 10/2007 Cohen et al.
2007/0233490 A1 10/2007 Yao
2007/0233497 A1 10/2007 Paek et al.
2007/0233692 A1 10/2007 Lisa et al.
2007/0233725 A1 10/2007 Michmerhuizen et al.

(56) **References Cited**

U.S. PATENT DOCUMENTS

2007/0238488 A1 10/2007 Scott
2007/0238489 A1 10/2007 Scott
2007/0238520 A1 10/2007 Kacmarcik
2007/0239429 A1 10/2007 Johnson et al.
2007/0239453 A1 10/2007 Paek et al.
2007/0240043 A1 10/2007 Fux et al.
2007/0240044 A1 10/2007 Fux et al.
2007/0240045 A1 10/2007 Fux et al.
2007/0241885 A1 10/2007 Clipsham et al.
2007/0244702 A1 10/2007 Kahn et al.
2007/0244976 A1 10/2007 Carroll et al.
2007/0247441 A1 10/2007 Kim et al.
2007/0255435 A1 11/2007 Cohen et al.
2007/0255979 A1 11/2007 Deily et al.
2007/0257890 A1 11/2007 Hotelling et al.
2007/0258642 A1 11/2007 Thota
2007/0260460 A1 11/2007 Hyatt
2007/0260595 A1 11/2007 Beatty et al.
2007/0260822 A1 11/2007 Adams
2007/0261080 A1 11/2007 Saetti
2007/0265831 A1 11/2007 Dinur et al.
2007/0265850 A1 11/2007 Kennewick et al.
2007/0271104 A1 11/2007 McKay
2007/0271510 A1 11/2007 Grigoriu et al.
2007/0274468 A1 11/2007 Cai
2007/0276651 A1 11/2007 Bliss et al.
2007/0276714 A1 11/2007 Beringer
2007/0276810 A1 11/2007 Rosen
2007/0277088 A1 11/2007 Bodin et al.
2007/0282595 A1 12/2007 Tunning et al.
2007/0285958 A1 12/2007 Platchta et al.
2007/0286363 A1 12/2007 Burg et al.
2007/0286399 A1 12/2007 Ramamoorthy et al.
2007/0288238 A1 12/2007 Hetherington et al.
2007/0288241 A1 12/2007 Cross et al.
2007/0288449 A1 12/2007 Datta et al.
2007/0291108 A1 12/2007 Huber et al.
2007/0294077 A1 12/2007 Narayanan et al.
2007/0294083 A1 12/2007 Bellegarda et al.
2007/0294199 A1 12/2007 Nelken et al.
2007/0294263 A1 12/2007 Punj et al.
2007/0299664 A1 12/2007 Peters et al.
2007/0299831 A1 12/2007 Williams et al.
2007/0300140 A1 12/2007 Makela et al.
2008/0001785 A1 1/2008 Elizarov et al.
2008/0010355 A1 1/2008 Vieri et al.
2008/0010605 A1 1/2008 Frank et al.
2008/0012950 A1 1/2008 Lee et al.
2008/0013751 A1 1/2008 Hiselius
2008/0015863 A1 1/2008 Agapi et al.
2008/0015864 A1 1/2008 Ross et al.
2008/0016575 A1 1/2008 Vincent et al.
2008/0021708 A1 1/2008 Bennett et al.
2008/0021886 A1 1/2008 Wang-Aryattanwanich et al.
2008/0022208 A1 1/2008 Morse
2008/0027726 A1 1/2008 Hansen et al.
2008/0031475 A1 2/2008 Goldstein
2008/0033719 A1 2/2008 Hall et al.
2008/0034032 A1 2/2008 Healey et al.
2008/0034044 A1 2/2008 Bhakta et al.
2008/0036743 A1 2/2008 Westerman et al.
2008/0040339 A1 2/2008 Zhou et al.
2008/0042970 A1 2/2008 Liang et al.
2008/0043936 A1 2/2008 Liebermann
2008/0043943 A1 2/2008 Sipher et al.
2008/0046239 A1 2/2008 Boo
2008/0046250 A1 2/2008 Agapi et al.
2008/0046422 A1 2/2008 Lee et al.
2008/0046820 A1 2/2008 Lee et al.
2008/0046948 A1 2/2008 Verosub
2008/0048908 A1 2/2008 Sato
2008/0052063 A1 2/2008 Bennett et al.
2008/0052073 A1 2/2008 Goto et al.
2008/0052077 A1 2/2008 Bennett et al.
2008/0052080 A1 2/2008 Narayanan et al.
2008/0052262 A1 2/2008 Kosinov et al.
2008/0055194 A1 3/2008 Baudino et al.
2008/0056459 A1 3/2008 Vallier et al.
2008/0056579 A1 3/2008 Guha
2008/0059190 A1 3/2008 Chu et al.
2008/0059200 A1 3/2008 Puli
2008/0059876 A1 3/2008 Hantler et al.
2008/0062141 A1 3/2008 Chandhri
2008/0065382 A1 3/2008 Gerl et al.
2008/0065387 A1 3/2008 Cross et al.
2008/0071529 A1 3/2008 Silverman et al.
2008/0071544 A1 3/2008 Beaufays et al.
2008/0075296 A1 3/2008 Lindahl et al.
2008/0076972 A1 3/2008 Dorogusker et al.
2008/0077310 A1 3/2008 Murlidar et al.
2008/0077384 A1 3/2008 Agapi et al.
2008/0077386 A1 3/2008 Gao et al.
2008/0077391 A1 3/2008 Chino et al.
2008/0077393 A1 3/2008 Gao et al.
2008/0077406 A1 3/2008 Ganong, III
2008/0077859 A1 3/2008 Schabes et al.
2008/0079566 A1 4/2008 Singh et al.
2008/0080411 A1 4/2008 Cole
2008/0082332 A1 4/2008 Mallett et al.
2008/0082338 A1 4/2008 O'Neil et al.
2008/0082390 A1 4/2008 Hawkins et al.
2008/0082576 A1 4/2008 Bodin et al.
2008/0082651 A1 4/2008 Singh et al.
2008/0084974 A1 4/2008 Dhanakshirur
2008/0091406 A1 4/2008 Baldwin et al.
2008/0091426 A1 4/2008 Rempel et al.
2008/0091443 A1 4/2008 Strope et al.
2008/0096531 A1 4/2008 Mcquaide et al.
2008/0096726 A1 4/2008 Riley et al.
2008/0097937 A1 4/2008 Hadjarian
2008/0098302 A1 4/2008 Roose
2008/0098480 A1 4/2008 Henry et al.
2008/0057922 A1 5/2008 Kokes et al.
2008/0100579 A1 5/2008 Robinson et al.
2008/0101584 A1 5/2008 Gray et al.
2008/0103774 A1 5/2008 White
2008/0109222 A1 5/2008 Liu
2008/0109402 A1 5/2008 Wang et al.
2008/0114480 A1 5/2008 Harb
2008/0114598 A1 5/2008 Prieto et al.
2008/0114604 A1 5/2008 Wei et al.
2008/0114841 A1 5/2008 Lambert
2008/0115084 A1 5/2008 Scott et al.
2008/0118143 A1 5/2008 Gordon et al.
2008/0119953 A1 5/2008 Reed
2008/0120102 A1 5/2008 Rao
2008/0120112 A1 5/2008 Jordan et al.
2008/0120196 A1 5/2008 Reed et al.
2008/0120311 A1 5/2008 Reed
2008/0120312 A1 5/2008 Reed
2008/0120330 A1 5/2008 Reed
2008/0120342 A1 5/2008 Reed et al.
2008/0122796 A1 5/2008 Jobs et al.
2008/0124695 A1 5/2008 Myers et al.
2008/0126075 A1 5/2008 Thorn et al.
2008/0126077 A1 5/2008 Thorn
2008/0126091 A1 5/2008 Clark et al.
2008/0126093 A1 5/2008 Sivadas
2008/0126100 A1 5/2008 Grost et al.
2008/0126491 A1 5/2008 Portele et al.
2008/0129520 A1 6/2008 Lee
2008/0130867 A1 6/2008 Bowen
2008/0131006 A1 6/2008 Oliver
2008/0132221 A1 6/2008 Willey et al.
2008/0133215 A1 6/2008 Sarukkai
2008/0133228 A1 6/2008 Rao
2008/0133230 A1 6/2008 Herforth et al.
2008/0133241 A1 6/2008 Baker et al.
2008/0133956 A1 6/2008 Fadell
2008/0140413 A1 6/2008 Millman et al.
2008/0140416 A1 6/2008 Shostak
2008/0140652 A1 6/2008 Millman et al.
2008/0140657 A1 6/2008 Azvine et al.
2008/0140702 A1 6/2008 Reed et al.

(56) **References Cited**

U.S. PATENT DOCUMENTS

2008/0141125 A1 6/2008 Ghassabian et al.
2008/0141180 A1 6/2008 Reed et al.
2008/0141182 A1 6/2008 Barsness et al.
2008/0146245 A1 6/2008 Appaji
2008/0146290 A1 6/2008 Sreeram et al.
2008/0147408 A1 6/2008 Da Palma et al.
2008/0147411 A1 6/2008 Dames et al.
2008/0147874 A1 6/2008 Yoneda et al.
2008/0150900 A1 6/2008 Han
2008/0154577 A1 6/2008 Kim et al.
2008/0154600 A1 6/2008 Tian et al.
2008/0154612 A1 6/2008 Evermann et al.
2008/0154828 A1 6/2008 Antebi et al.
2008/0157867 A1 7/2008 Krah
2008/0161113 A1 7/2008 Hansen et al.
2008/0162120 A1 7/2008 Mactavish et al.
2008/0163119 A1 7/2008 Kim et al.
2008/0163131 A1 7/2008 Hirai et al.
2008/0165144 A1 7/2008 Forstall et al.
2008/0165980 A1 7/2008 Pavlovic et al.
2008/0165994 A1 7/2008 Caren et al.
2008/0167013 A1 7/2008 Novick et al.
2008/0167858 A1 7/2008 Christie et al.
2008/0168366 A1 7/2008 Kocienda et al.
2008/0183473 A1 7/2008 Nagano et al.
2008/0186960 A1 8/2008 Kocheisen et al.
2008/0189099 A1 8/2008 Friedman et al.
2008/0189106 A1 8/2008 Low et al.
2008/0189110 A1 8/2008 Freeman et al.
2008/0189114 A1 8/2008 Fail et al.
2008/0189606 A1 8/2008 Rybak
2008/0195312 A1 8/2008 Aaron et al.
2008/0195388 A1 8/2008 Bower et al.
2008/0195391 A1 8/2008 Marple et al.
2008/0195601 A1 8/2008 Ntoulas et al.
2008/0195630 A1 8/2008 Exartier et al.
2008/0195940 A1 8/2008 Gail et al.
2008/0200142 A1 8/2008 Abdel-Kader et al.
2008/0201306 A1 8/2008 Cooper et al.
2008/0201375 A1 8/2008 Khedouri et al.
2008/0204379 A1 8/2008 Perez-Noguera
2008/0207176 A1 8/2008 Brackbill et al.
2008/0208585 A1 8/2008 Ativanichayaphong et al.
2008/0208587 A1 8/2008 Ben-David et al.
2008/0208864 A1 8/2008 Cucerzan et al.
2008/0212796 A1 9/2008 Denda
2008/0219641 A1 9/2008 Sandrew et al.
2008/0221866 A1 9/2008 Katragadda et al.
2008/0221879 A1 9/2008 Cerra et al.
2008/0221880 A1 9/2008 Cerra et al.
2008/0221887 A1 9/2008 Rose et al.
2008/0221889 A1 9/2008 Cerra et al.
2008/0221903 A1 9/2008 Kanevsky et al.
2008/0222118 A1 9/2008 Scian et al.
2008/0226130 A1 9/2008 Kansal et al.
2008/0228463 A1 9/2008 Mori et al.
2008/0228485 A1 9/2008 Owen
2008/0228490 A1 9/2008 Fischer et al.
2008/0228495 A1 9/2008 Cross et al.
2008/0228496 A1 9/2008 Yu et al.
2008/0228928 A1 9/2008 Donelli et al.
2008/0229185 A1 9/2008 Lynch
2008/0229218 A1 9/2008 Maeng
2008/0235017 A1 9/2008 Satomura et al.
2008/0235024 A1 9/2008 Goldberg et al.
2008/0235027 A1 9/2008 Cross
2008/0240569 A1 10/2008 Tonouchi
2008/0242280 A1 10/2008 Shapiro et al.
2008/0244390 A1 10/2008 Fux et al.
2008/0244446 A1 10/2008 Lefevre et al.
2008/0247519 A1 10/2008 Abella et al.
2008/0247529 A1 10/2008 Barton et al.
2008/0248797 A1 10/2008 Freeman et al.
2008/0249770 A1 10/2008 Kim et al.
2008/0249778 A1 10/2008 Barton et al.
2008/0253577 A1 10/2008 Eppolito
2008/0254425 A1 10/2008 Cohen et al.
2008/0255837 A1 10/2008 Kahn et al.
2008/0255842 A1 10/2008 Simhi et al.
2008/0255845 A1 10/2008 Bennett
2008/0256613 A1 10/2008 Grover
2008/0259022 A1 10/2008 Mansfield et al.
2008/0262828 A1 10/2008 Och et al.
2008/0262838 A1 10/2008 Nurminen et al.
2008/0262846 A1 10/2008 Burns et al.
2008/0263139 A1 10/2008 Martin
2008/0270118 A1 10/2008 Kuo et al.
2008/0270138 A1 10/2008 Knight et al.
2008/0270139 A1 10/2008 Shi et al.
2008/0270140 A1 10/2008 Hertz et al.
2008/0270151 A1 10/2008 Mahoney et al.
2008/0277473 A1 11/2008 Kotlarsky et al.
2008/0281510 A1 11/2008 Shahine
2008/0288259 A1 11/2008 Chambers et al.
2008/0288460 A1 11/2008 Poniatowski et al.
2008/0292112 A1 11/2008 Valenzuela et al.
2008/0294418 A1 11/2008 Cleary et al.
2008/0294651 A1 11/2008 Masuyama et al.
2008/0294981 A1 11/2008 Balzano et al.
2008/0298563 A1 12/2008 Rondeau et al.
2008/0298766 A1 12/2008 Wen et al.
2008/0299523 A1 12/2008 Chai et al.
2008/0300871 A1 12/2008 Gilbert
2008/0300878 A1 12/2008 Bennett
2008/0303645 A1 12/2008 Seymour et al.
2008/0306727 A1 12/2008 Thurmair et al.
2008/0312909 A1 12/2008 Hermansen et al.
2008/0312928 A1 12/2008 Goebel et al.
2008/0313335 A1 12/2008 Jung et al.
2008/0316183 A1 12/2008 Westerman et al.
2008/0319738 A1 12/2008 Liu et al.
2008/0319753 A1 12/2008 Hancock
2008/0319763 A1 12/2008 Di Fabbrizio et al.
2008/0319783 A1 12/2008 Yao et al.
2009/0003115 A1 1/2009 Lindahl et al.
2009/0005012 A1 1/2009 Van Heugten
2009/0005891 A1 1/2009 Batson et al.
2009/0006097 A1 1/2009 Etezadi et al.
2009/0006099 A1 1/2009 Sharpe et al.
2009/0006100 A1 1/2009 Badger et al.
2009/0006343 A1 1/2009 Platt et al.
2009/0006345 A1 1/2009 Platt et al.
2009/0006488 A1 1/2009 Lindahl et al.
2009/0006671 A1 1/2009 Batson et al.
2009/0007001 A1 1/2009 Morin et al.
2009/0011709 A1 1/2009 Akasaka et al.
2009/0012748 A1 1/2009 Beish et al.
2009/0012775 A1 1/2009 El Hady et al.
2009/0018828 A1 1/2009 Nakadai et al.
2009/0018829 A1 1/2009 Kuperstein
2009/0018834 A1 1/2009 Cooper et al.
2009/0018835 A1 1/2009 Cooper et al.
2009/0018839 A1 1/2009 Cooper et al.
2009/0018840 A1 1/2009 Lutz et al.
2009/0022329 A1 1/2009 Mahowald
2009/0024595 A1 1/2009 Chen
2009/0028435 A1 1/2009 Wu et al.
2009/0030800 A1 1/2009 Grois
2009/0030978 A1 1/2009 Johnson et al.
2009/0043580 A1 2/2009 Mozer et al.
2009/0043583 A1 2/2009 Agapi et al.
2009/0043763 A1 2/2009 Peng
2009/0044094 A1 2/2009 Rapp et al.
2009/0048821 A1 2/2009 Yam et al.
2009/0048845 A1 2/2009 Burckart et al.
2009/0049067 A1 2/2009 Murray
2009/0055168 A1 2/2009 Wu et al.
2009/0055175 A1 2/2009 Terrell et al.
2009/0055179 A1 2/2009 Cho et al.
2009/0055186 A1 2/2009 Lance et al.
2009/0055381 A1 2/2009 Wu et al.
2009/0058823 A1 3/2009 Kocienda
2009/0058860 A1 3/2009 Fong et al.
2009/0060351 A1 3/2009 Li et al.

(56) **References Cited**

U.S. PATENT DOCUMENTS

2009/0060472 A1 3/2009 Bull et al.
2009/0063974 A1 3/2009 Bull et al.
2009/0064031 A1 3/2009 Bull et al.
2009/0070097 A1 3/2009 Wu et al.
2009/0070102 A1 3/2009 Maegawa
2009/0070109 A1 3/2009 Didcock et al.
2009/0070114 A1 3/2009 Staszak
2009/0074214 A1 3/2009 Bradford et al.
2009/0076792 A1 3/2009 Lawson-Tancred
2009/0076796 A1 3/2009 Daraselia
2009/0076819 A1 3/2009 Wouters et al.
2009/0076821 A1 3/2009 Brenner et al.
2009/0076825 A1 3/2009 Bradford et al.
2009/0077165 A1 3/2009 Rhodes et al.
2009/0079622 A1 3/2009 Seshadri et al.
2009/0083034 A1 3/2009 Hernandez et al.
2009/0083035 A1 3/2009 Huang et al.
2009/0083036 A1 3/2009 Zhao et al.
2009/0083037 A1 3/2009 Gleason et al.
2009/0083047 A1 3/2009 Lindahl et al.
2009/0089058 A1 4/2009 Bellegarda
2009/0092239 A1 4/2009 Macwan et al.
2009/0092260 A1 4/2009 Powers
2009/0092261 A1 4/2009 Bard
2009/0092262 A1 4/2009 Costa et al.
2009/0094029 A1 4/2009 Koch et al.
2009/0094033 A1 4/2009 Mozer et al.
2009/0097634 A1 4/2009 Nambiar et al.
2009/0097637 A1 4/2009 Boscher et al.
2009/0100049 A1 4/2009 Cao
2009/0100454 A1 4/2009 Weber
2009/0104898 A1 4/2009 Harris
2009/0106026 A1 4/2009 Ferrieux
2009/0106376 A1 4/2009 Tom et al.
2009/0106397 A1 4/2009 O'Keefe
2009/0112572 A1 4/2009 Thorn
2009/0112576 A1 4/2009 Jackson et al.
2009/0112592 A1 4/2009 Candelore et al.
2009/0112677 A1 4/2009 Rhett
2009/0112892 A1 4/2009 Cardie et al.
2009/0119587 A1 5/2009 Allen et al.
2009/0123021 A1 5/2009 Jung et al.
2009/0123071 A1 5/2009 Iwasaki
2009/0125477 A1 5/2009 Lu et al.
2009/0128505 A1 5/2009 Partridge et al.
2009/0132253 A1 5/2009 Bellegarda
2009/0132255 A1 5/2009 Lu
2009/0137286 A1 5/2009 Luke et al.
2009/0138736 A1 5/2009 Chin
2009/0138828 A1 5/2009 Schultz et al.
2009/0144049 A1 6/2009 Haddad et al.
2009/0144428 A1 6/2009 Bowater et al.
2009/0144609 A1 6/2009 Liang et al.
2009/0146848 A1 6/2009 Ghassabian
2009/0150147 A1 6/2009 Jacoby et al.
2009/0150156 A1 6/2009 Kennewick et al.
2009/0152349 A1 6/2009 Bonev et al.
2009/0153288 A1 6/2009 Hope et al.
2009/0154669 A1 6/2009 Wood et al.
2009/0157382 A1 6/2009 Bar
2009/0157384 A1 6/2009 Toutanova et al.
2009/0157401 A1 6/2009 Bennett
2009/0158200 A1 6/2009 Palahnuk et al.
2009/0158323 A1 6/2009 Bober et al.
2009/0158423 A1 6/2009 Orlassino et al.
2009/0160803 A1 6/2009 Hashimoto
2009/0164301 A1 6/2009 O'Sullivan et al.
2009/0164441 A1 6/2009 Cheyer
2009/0164655 A1 6/2009 Pettersson et al.
2009/0164937 A1 6/2009 Alviar et al.
2009/0167508 A1 7/2009 Fadell et al.
2009/0167509 A1 7/2009 Fadell et al.
2009/0171578 A1 7/2009 Kim et al.
2009/0171662 A1 7/2009 Huang et al.
2009/0171664 A1 7/2009 Kennewick et al.
2009/0172108 A1 7/2009 Singh
2009/0172542 A1 7/2009 Girish et al.
2009/0174667 A1 7/2009 Kocienda et al.
2009/0174677 A1 7/2009 Gehani et al.
2009/0177300 A1 7/2009 Lee
2009/0177461 A1 7/2009 Ehsani et al.
2009/0177966 A1 7/2009 Chaudhri
2009/0182445 A1 7/2009 Girish et al.
2009/0187402 A1 7/2009 Scholl
2009/0187577 A1 7/2009 Reznik et al.
2009/0187950 A1 7/2009 Nicas et al.
2009/0191895 A1 7/2009 Singh et al.
2009/0192782 A1 7/2009 Drewes
2009/0192787 A1 7/2009 Roon
2009/0198497 A1 8/2009 Kwon
2009/0204409 A1 8/2009 Mozer et al.
2009/0204478 A1 8/2009 Kaib et al.
2009/0204596 A1 8/2009 Brun et al.
2009/0204601 A1 8/2009 Grasset
2009/0204620 A1 8/2009 Thione et al.
2009/0210230 A1 8/2009 Schwarz et al.
2009/0210232 A1 8/2009 Sanchez et al.
2009/0213134 A1 8/2009 Stephanick et al.
2009/0215503 A1 8/2009 Zhang et al.
2009/0216396 A1 8/2009 Yamagata
2009/0216540 A1 8/2009 Tessel et al.
2009/0216704 A1 8/2009 Zheng et al.
2009/0221274 A1 9/2009 Venkatakrishnan et al.
2009/0222257 A1 9/2009 Sumita et al.
2009/0222270 A2 9/2009 Likens et al.
2009/0222488 A1 9/2009 Boerries et al.
2009/0228126 A1 9/2009 Spielberg et al.
2009/0228273 A1 9/2009 Wang et al.
2009/0228281 A1 9/2009 Singleton et al.
2009/0228439 A1 9/2009 Manolescu et al.
2009/0228792 A1 9/2009 Van Os et al.
2009/0228842 A1 9/2009 Westerman et al.
2009/0234638 A1 9/2009 Ranjan et al.
2009/0234655 A1 9/2009 Kwon
2009/0235280 A1 9/2009 Tannier et al.
2009/0239202 A1 9/2009 Stone
2009/0239552 A1 9/2009 Churchill et al.
2009/0240485 A1 9/2009 Dalal et al.
2009/0241054 A1 9/2009 Hendricks
2009/0241760 A1 10/2009 Georges
2009/0247237 A1 10/2009 Mittleman et al.
2009/0248182 A1 10/2009 Logan et al.
2009/0248395 A1 10/2009 Alewine et al.
2009/0248420 A1 10/2009 Basir et al.
2009/0248422 A1 10/2009 Li et al.
2009/0249198 A1 10/2009 Davis et al.
2009/0249247 A1 10/2009 Tseng et al.
2009/0252350 A1 10/2009 Seguin
2009/0253457 A1 10/2009 Seguin
2009/0253463 A1 10/2009 Shin et al.
2009/0254339 A1 10/2009 Seguin
2009/0254345 A1 10/2009 Fleizach et al.
2009/0254819 A1 10/2009 Song et al.
2009/0254823 A1 10/2009 Barrett
2009/0259969 A1 10/2009 Pallakoff
2009/0265368 A1 10/2009 Crider et al.
2009/0271109 A1 10/2009 Lee et al.
2009/0271175 A1 10/2009 Bodin et al.
2009/0271176 A1 10/2009 Bodin et al.
2009/0271178 A1 10/2009 Bodin et al.
2009/0271188 A1 10/2009 Agapi et al.
2009/0271189 A1* 10/2009 Agapi G10L 15/01
704/233
2009/0274315 A1 11/2009 Carnes et al.
2009/0281789 A1 11/2009 Waibel et al.
2009/0284482 A1 11/2009 Chin
2009/0286514 A1 11/2009 Lichorowic et al.
2009/0287583 A1 11/2009 Holmes
2009/0290718 A1 11/2009 Kahn et al.
2009/0292987 A1 11/2009 Sorenson
2009/0296552 A1 12/2009 Hicks et al.
2009/0298474 A1 12/2009 George
2009/0298529 A1 12/2009 Mahajan
2009/0299745 A1 12/2009 Kennewick et al.

(56) **References Cited**

U.S. PATENT DOCUMENTS

2009/0299849 A1 12/2009 Cao et al.
2009/0300391 A1 12/2009 Jessup et al.
2009/0300488 A1 12/2009 Salamon et al.
2009/0304198 A1 12/2009 Herre et al.
2009/0306967 A1 12/2009 Nicolov et al.
2009/0306969 A1 12/2009 Goud et al.
2009/0306979 A1 12/2009 Jaiswal et al.
2009/0306980 A1 12/2009 Shin
2009/0306981 A1 12/2009 Cromack et al.
2009/0306985 A1 12/2009 Roberts et al.
2009/0306988 A1 12/2009 Chen et al.
2009/0306989 A1 12/2009 Kaji
2009/0307162 A1 12/2009 Bui et al.
2009/0307201 A1 12/2009 Dunning et al.
2009/0307584 A1 12/2009 Davidson et al.
2009/0313014 A1 12/2009 Shin et al.
2009/0313023 A1 12/2009 Jones
2009/0313026 A1 12/2009 Coffman et al.
2009/0313544 A1 12/2009 Wood et al.
2009/0313564 A1 12/2009 Rottler et al.
2009/0316943 A1 12/2009 Frigola Munoz et al.
2009/0318119 A1 12/2009 Basir et al.
2009/0318198 A1 12/2009 Carroll
2009/0319266 A1 12/2009 Brown et al.
2009/0326923 A1 12/2009 Yan et al.
2009/0326936 A1 12/2009 Nagashima
2009/0326938 A1 12/2009 Marila et al.
2009/0326949 A1 12/2009 Douthitt et al.
2009/0327977 A1 12/2009 Bachfischer et al.
2010/0004918 A1 1/2010 Lee et al.
2010/0004931 A1 1/2010 Ma et al.
2010/0005081 A1 1/2010 Bennett
2010/0010803 A1 1/2010 Ishikawa et al.
2010/0010814 A1 1/2010 Patel
2010/0013760 A1 1/2010 Hirai et al.
2010/0013796 A1 1/2010 Abileah et al.
2010/0017212 A1 1/2010 Attwater et al.
2010/0017382 A1 1/2010 Katragadda et al.
2010/0019834 A1 1/2010 Zerbe et al.
2010/0023318 A1 1/2010 Lemoine
2010/0023320 A1 1/2010 Di Cristo et al.
2010/0026526 A1 2/2010 Yokota
2010/0030549 A1 2/2010 Lee et al.
2010/0030928 A1 2/2010 Conroy et al.
2010/0031143 A1 2/2010 Rao et al.
2010/0036653 A1 2/2010 Kim et al.
2010/0036655 A1 2/2010 Cecil et al.
2010/0036660 A1 2/2010 Bennett
2010/0037183 A1 2/2010 Miyashita et al.
2010/0042400 A1 2/2010 Block et al.
2010/0042576 A1 2/2010 Roettger et al.
2010/0046842 A1 2/2010 Conwell et al.
2010/0049498 A1 2/2010 Cao et al.
2010/0049514 A1 2/2010 Kennewick et al.
2010/0050064 A1 2/2010 Liu et al.
2010/0054512 A1 3/2010 Solum
2010/0057457 A1 3/2010 Ogata et al.
2010/0057461 A1 3/2010 Neubacher et al.
2010/0057643 A1 3/2010 Yang
2010/0060646 A1 3/2010 Unsal et al.
2010/0063804 A1 3/2010 Sato et al.
2010/0063825 A1 3/2010 Williams et al.
2010/0063961 A1 3/2010 Guiheneuf et al.
2010/0064113 A1 3/2010 Lindahl et al.
2010/0064218 A1 3/2010 Bull et al.
2010/0067723 A1 3/2010 Bergmann et al.
2010/0067867 A1 3/2010 Lin et al.
2010/0070281 A1 3/2010 Conkie et al.
2010/0070899 A1 3/2010 Hunt et al.
2010/0071003 A1 3/2010 Bychkov et al.
2010/0076760 A1 3/2010 Kraenzel et al.
2010/0076993 A1 3/2010 Klawitter et al.
2010/0077350 A1 3/2010 Lim et al.
2010/0079501 A1 4/2010 Ikeda et al.
2010/0080398 A1 4/2010 Waldmann
2010/0080470 A1 4/2010 Deluca et al.
2010/0081456 A1 4/2010 Singh et al.
2010/0081487 A1 4/2010 Chen et al.
2010/0082286 A1 4/2010 Leung
2010/0082327 A1 4/2010 Rogers et al.
2010/0082328 A1 4/2010 Rogers et al.
2010/0082329 A1 4/2010 Silverman et al.
2010/0082346 A1 4/2010 Rogers et al.
2010/0082347 A1 4/2010 Rogers et al.
2010/0082348 A1 4/2010 Silverman et al.
2010/0082349 A1 4/2010 Bellegarda et al.
2010/0082970 A1 4/2010 Lindahl et al.
2010/0086152 A1 4/2010 Rank et al.
2010/0086153 A1 4/2010 Hagen et al.
2010/0086156 A1 4/2010 Rank et al.
2010/0088020 A1 4/2010 Sano et al.
2010/0088093 A1 4/2010 Lee et al.
2010/0088100 A1 4/2010 Lindahl
2010/0098231 A1 4/2010 Wohlert et al.
2010/0100212 A1 4/2010 Lindahl et al.
2010/0100384 A1 4/2010 Ju et al.
2010/0100816 A1 4/2010 Mccloskey et al.
2010/0103776 A1 4/2010 Chan
2010/0106486 A1 4/2010 Hua et al.
2010/0106498 A1 4/2010 Morrison et al.
2010/0106500 A1 4/2010 McKee et al.
2010/0106503 A1 4/2010 Farrell et al.
2010/0114856 A1 5/2010 Kuboyama
2010/0121637 A1 5/2010 Roy et al.
2010/0125456 A1 5/2010 Weng et al.
2010/0125458 A1 5/2010 Franco et al.
2010/0125460 A1 5/2010 Mellott et al.
2010/0125811 A1 5/2010 Moore et al.
2010/0131269 A1 5/2010 Park et al.
2010/0131273 A1 5/2010 Aley-Raz et al.
2010/0131498 A1 5/2010 Linthicum et al.
2010/0131899 A1 5/2010 Hubert
2010/0138215 A1 6/2010 Williams
2010/0138224 A1 6/2010 Bedingfield, Sr.
2010/0138416 A1 6/2010 Bellotti
2010/0138680 A1 6/2010 Brisebois et al.
2010/0138759 A1 6/2010 Roy
2010/0142740 A1 6/2010 Roerup
2010/0145694 A1 6/2010 Ju et al.
2010/0145700 A1 6/2010 Kennewick et al.
2010/0146442 A1 6/2010 Nagasaka et al.
2010/0150321 A1 6/2010 Harris et al.
2010/0153115 A1 6/2010 Klee et al.
2010/0153448 A1 6/2010 Harpur et al.
2010/0161313 A1 6/2010 Karttunen
2010/0161554 A1 6/2010 Datuashvili et al.
2010/0164897 A1 7/2010 Morin et al.
2010/0169075 A1 7/2010 Raffa et al.
2010/0169097 A1 7/2010 Nachman et al.
2010/0169098 A1 7/2010 Patch
2010/0171713 A1 7/2010 Kwok et al.
2010/0174544 A1 7/2010 Heifets
2010/0175066 A1 7/2010 Paik
2010/0179932 A1 7/2010 Yoon et al.
2010/0179991 A1 7/2010 Lorch et al.
2010/0180218 A1 7/2010 Boston et al.
2010/0185448 A1 7/2010 Meisel
2010/0185949 A1 7/2010 Jaeger
2010/0191520 A1 7/2010 Gruhn et al.
2010/0197359 A1 8/2010 Harris
2010/0199180 A1 8/2010 Brichter et al.
2010/0199215 A1 8/2010 Seymour et al.
2010/0204986 A1 8/2010 Kennewick et al.
2010/0211199 A1 8/2010 Naik et al.
2010/0216509 A1 8/2010 Riemer et al.
2010/0217604 A1 8/2010 Baldwin et al.
2010/0222033 A1 9/2010 Scott et al.
2010/0222098 A1 9/2010 Garg
2010/0223055 A1 9/2010 Mclean
2010/0223056 A1 9/2010 Kadirkamanathan et al.
2010/0223131 A1 9/2010 Scott et al.
2010/0225809 A1 9/2010 Connors et al.
2010/0228540 A1 9/2010 Bennett
2010/0228549 A1 9/2010 Herman et al.

(56) **References Cited**

U.S. PATENT DOCUMENTS

2010/0228691 A1 9/2010 Yang et al.
2010/0229082 A1 9/2010 Karmarkar et al.
2010/0229100 A1 9/2010 Miller et al.
2010/0231474 A1 9/2010 Yamagajo et al.
2010/0235167 A1 9/2010 Bourdon
2010/0235341 A1 9/2010 Bennett
2010/0235729 A1 9/2010 Kocienda et al.
2010/0235732 A1 9/2010 Bergman
2010/0235770 A1 9/2010 Ording et al.
2010/0241418 A1 9/2010 Maeda et al.
2010/0250542 A1 9/2010 Fujimaki
2010/0250599 A1 9/2010 Schmidt et al.
2010/0255858 A1 10/2010 Juhasz
2010/0257160 A1 10/2010 Cao
2010/0257478 A1 10/2010 Longe et al.
2010/0262599 A1 10/2010 Nitz
2010/0268539 A1 10/2010 Xu et al.
2010/0269040 A1 10/2010 Lee
2010/0274753 A1 10/2010 Liberty et al.
2010/0277579 A1 11/2010 Cho et al.
2010/0278320 A1 11/2010 Arsenault et al.
2010/0278453 A1 11/2010 King
2010/0280983 A1 11/2010 Cho et al.
2010/0281034 A1 11/2010 Petrou et al.
2010/0286985 A1 11/2010 Kennewick et al.
2010/0287514 A1 11/2010 Cragun et al.
2010/0293460 A1 11/2010 Budelli
2010/0295645 A1 11/2010 Falldin et al.
2010/0299133 A1 11/2010 Kopparapu et al.
2010/0299138 A1 11/2010 Kim
2010/0299142 A1 11/2010 Freeman et al.
2010/0302056 A1 12/2010 Dutton et al.
2010/0304705 A1 12/2010 Hursey et al.
2010/0305807 A1 12/2010 Basir et al.
2010/0305947 A1 12/2010 Schwarz et al.
2010/0312547 A1 12/2010 Van Os et al.
2010/0312566 A1 12/2010 Odinak et al.
2010/0318576 A1 12/2010 Kim
2010/0322438 A1 12/2010 Siotis
2010/0324709 A1 12/2010 Starmen
2010/0324895 A1 12/2010 Kurzweil et al.
2010/0324896 A1 12/2010 Attwater et al.
2010/0324905 A1 12/2010 Kurzweil et al.
2010/0325158 A1 12/2010 Oral et al.
2010/0325573 A1 12/2010 Estrada et al.
2010/0325588 A1 12/2010 Reddy et al.
2010/0332220 A1 12/2010 Hursey et al.
2010/0332224 A1 12/2010 Mäkelä et al.
2010/0332235 A1 12/2010 David
2010/0332236 A1 12/2010 Tan
2010/0332280 A1 12/2010 Bradley et al.
2010/0332348 A1 12/2010 Cao
2010/0332428 A1 12/2010 Mchenry et al.
2010/0332976 A1 12/2010 Fux et al.
2010/0333030 A1 12/2010 Johns
2010/0333163 A1 12/2010 Daly
2011/0002487 A1 1/2011 Panther et al.
2011/0004475 A1 1/2011 Bellegarda
2011/0009107 A1 1/2011 Guba et al.
2011/0010178 A1 1/2011 Lee et al.
2011/0010644 A1 1/2011 Merrill et al.
2011/0016150 A1 1/2011 Engstrom et al.
2011/0018695 A1 1/2011 Bells et al.
2011/0021213 A1 1/2011 Carr
2011/0022292 A1 1/2011 Shen et al.
2011/0022388 A1 1/2011 Wu et al.
2011/0022393 A1 1/2011 Waller et al.
2011/0022394 A1 1/2011 Wide et al.
2011/0022472 A1 1/2011 Zon et al.
2011/0022952 A1 1/2011 Wu et al.
2011/0029616 A1 2/2011 Wang et al.
2011/0033064 A1 2/2011 Johnson et al.
2011/0035144 A1 2/2011 Okamoto et al.
2011/0035434 A1 2/2011 Lockwood
2011/0038489 A1 2/2011 Visser et al.
2011/0045841 A1 2/2011 Kuhlke et al.
2011/0047072 A1 2/2011 Ciurea
2011/0047149 A1 2/2011 Vaananen
2011/0047161 A1 2/2011 Myaeng et al.
2011/0050591 A1 3/2011 Kim et al.
2011/0050592 A1 3/2011 Kim et al.
2011/0054647 A1 3/2011 Chipchase
2011/0054894 A1 3/2011 Phillips et al.
2011/0054901 A1 3/2011 Qin et al.
2011/0055256 A1 3/2011 Phillips et al.
2011/0060584 A1 3/2011 Ferrucci et al.
2011/0060587 A1 3/2011 Phillips et al.
2011/0060589 A1 3/2011 Weinberg et al.
2011/0060807 A1 3/2011 Martin et al.
2011/0065456 A1 3/2011 Brennan et al.
2011/0066366 A1 3/2011 Ellanti et al.
2011/0066468 A1 3/2011 Huang et al.
2011/0066634 A1 3/2011 Phillips et al.
2011/0072492 A1 3/2011 Mohler et al.
2011/0076994 A1 3/2011 Kim et al.
2011/0082688 A1 4/2011 Kim et al.
2011/0083079 A1 4/2011 Farrell et al.
2011/0087491 A1 4/2011 Wittenstein et al.
2011/0090078 A1 4/2011 Kim et al.
2011/0093261 A1 4/2011 Angott
2011/0093265 A1 4/2011 Stent et al.
2011/0093271 A1 4/2011 Bernard et al.
2011/0099000 A1 4/2011 Rai et al.
2011/0103682 A1 5/2011 Chidlovskii et al.
2011/0106736 A1 5/2011 Aharonson et al.
2011/0106892 A1 5/2011 Nelson et al.
2011/0110502 A1 5/2011 Daye et al.
2011/0112827 A1 5/2011 Kennewick et al.
2011/0112837 A1 5/2011 Kurki-Suonio et al.
2011/0112921 A1 5/2011 Kennewick et al.
2011/0116610 A1 5/2011 Shaw et al.
2011/0119049 A1 5/2011 Ylonen
2011/0119051 A1 5/2011 Li et al.
2011/0119715 A1 5/2011 Chang et al.
2011/0123004 A1 5/2011 Chang et al.
2011/0125498 A1 5/2011 Pickering et al.
2011/0125540 A1 5/2011 Jang et al.
2011/0130958 A1 6/2011 Stahl et al.
2011/0131036 A1 6/2011 DiCristo et al.
2011/0131038 A1 6/2011 Oyaizu et al.
2011/0131045 A1 6/2011 Cristo et al.
2011/0137636 A1 6/2011 Srihari et al.
2011/0141141 A1 6/2011 Kankainen
2011/0143811 A1 6/2011 Rodriguez
2011/0144857 A1 6/2011 Wingrove et al.
2011/0144901 A1 6/2011 Wang
2011/0144973 A1 6/2011 Bocchieri et al.
2011/0144999 A1 6/2011 Jang et al.
2011/0145718 A1 6/2011 Ketola et al.
2011/0151830 A1 6/2011 Blanda et al.
2011/0153209 A1 6/2011 Geelen
2011/0153322 A1 6/2011 Kwak et al.
2011/0153324 A1 6/2011 Ballinger et al.
2011/0153330 A1 6/2011 Yazdani et al.
2011/0153373 A1 6/2011 Dantzig et al.
2011/0154193 A1 6/2011 Creutz et al.
2011/0157029 A1 6/2011 Tseng
2011/0161072 A1 6/2011 Terao et al.
2011/0161076 A1 6/2011 Davis et al.
2011/0161079 A1 6/2011 Gruhn et al.
2011/0161309 A1 6/2011 Lung et al.
2011/0161852 A1 6/2011 Vainio et al.
2011/0167350 A1 7/2011 Hoellwarth
2011/0175810 A1 7/2011 Markovic et al.
2011/0179002 A1 7/2011 Dumitru et al.
2011/0179372 A1 7/2011 Moore et al.
2011/0183650 A1 7/2011 Mckee et al.
2011/0184721 A1 7/2011 Subramanian et al.
2011/0184730 A1 7/2011 LeBeau et al.
2011/0191271 A1 8/2011 Baker et al.
2011/0191344 A1 8/2011 Jin et al.
2011/0195758 A1 8/2011 Damale et al.
2011/0197128 A1 8/2011 Assadollahi et al.
2011/0201385 A1 8/2011 Higginbotham et al.

(56) **References Cited**

U.S. PATENT DOCUMENTS

2011/0201387 A1 8/2011 Paek et al.
2011/0202526 A1 8/2011 Lee et al.
2011/0205149 A1 8/2011 Tom et al.
2011/0208511 A1 8/2011 Sikstrom et al.
2011/0208524 A1 8/2011 Haughay
2011/0209088 A1 8/2011 Hinckley et al.
2011/0212717 A1 9/2011 Rhoads et al.
2011/0218806 A1 9/2011 Alewine et al.
2011/0218855 A1 9/2011 Cao et al.
2011/0219018 A1 9/2011 Bailey et al.
2011/0223893 A1 9/2011 Lau et al.
2011/0224972 A1 9/2011 Millett et al.
2011/0228913 A1 9/2011 Cochinwala et al.
2011/0231182 A1 9/2011 Weider et al.
2011/0231184 A1 9/2011 Kerr
2011/0231188 A1 9/2011 Kennewick et al.
2011/0231432 A1 9/2011 Sata et al.
2011/0231474 A1 9/2011 Locker et al.
2011/0238407 A1 9/2011 Kent
2011/0238408 A1 9/2011 Larcheveque et al.
2011/0238676 A1 9/2011 Liu et al.
2011/0239111 A1 9/2011 Grover
2011/0242007 A1 10/2011 Gray et al.
2011/0246471 A1 10/2011 Rakib et al.
2011/0249144 A1 10/2011 Chang
2011/0250570 A1 10/2011 Mack et al.
2011/0258188 A1 10/2011 Abdalmageed et al.
2011/0260861 A1 10/2011 Singh et al.
2011/0264643 A1 10/2011 Cao
2011/0274303 A1 11/2011 Filson et al.
2011/0276598 A1 11/2011 Kozempel
2011/0276944 A1 11/2011 Bergman et al.
2011/0279368 A1 11/2011 Klein et al.
2011/0282888 A1 11/2011 Koperski et al.
2011/0282906 A1 11/2011 Wong
2011/0288861 A1 11/2011 Kurzweil et al.
2011/0298585 A1 12/2011 Barry
2011/0301943 A1 12/2011 Patch
2011/0302162 A1 12/2011 Xiao et al.
2011/0306426 A1 12/2011 Novak et al.
2011/0307241 A1 12/2011 Waibel et al.
2011/0307491 A1 12/2011 Fisk et al.
2011/0307810 A1 12/2011 Hilerio et al.
2011/0313775 A1 12/2011 Laligand et al.
2011/0314032 A1 12/2011 Bennett et al.
2011/0314404 A1 12/2011 Kotler et al.
2011/0320187 A1 12/2011 Motik et al.
2012/0002820 A1 1/2012 Leichter
2012/0005602 A1 1/2012 Anttila et al.
2012/0008754 A1 1/2012 Mukherjee et al.
2012/0010886 A1 1/2012 Razavilar
2012/0011138 A1 1/2012 Dunning et al.
2012/0013609 A1 1/2012 Reponen et al.
2012/0015629 A1 1/2012 Olsen et al.
2012/0016678 A1 1/2012 Gruber et al.
2012/0019400 A1 1/2012 Patel et al.
2012/0020490 A1 1/2012 Leichter
2012/0022787 A1 1/2012 LeBeau et al.
2012/0022857 A1 1/2012 Baldwin et al.
2012/0022860 A1 1/2012 Lloyd et al.
2012/0022868 A1 1/2012 LeBeau et al.
2012/0022869 A1 1/2012 Lloyd et al.
2012/0022870 A1 1/2012 Kristjansson et al.
2012/0022872 A1 1/2012 Gruber et al.
2012/0022874 A1 1/2012 Lloyd et al.
2012/0022876 A1 1/2012 LeBeau et al.
2012/0022967 A1 1/2012 Bachman et al.
2012/0023088 A1 1/2012 Cheng et al.
2012/0023095 A1 1/2012 Wadycki et al.
2012/0023462 A1 1/2012 Rosing et al.
2012/0029661 A1 2/2012 Jones et al.
2012/0029910 A1 2/2012 Medlock et al.
2012/0034904 A1 2/2012 LeBeau et al.
2012/0035907 A1 2/2012 Lebeau et al.
2012/0035908 A1 2/2012 Lebeau et al.
2012/0035924 A1 2/2012 Jitkoff et al.
2012/0035925 A1 2/2012 Friend et al.
2012/0035926 A1 2/2012 Ambler
2012/0035931 A1 2/2012 LeBeau et al.
2012/0035932 A1 2/2012 Jitkoff et al.
2012/0036556 A1 2/2012 LeBeau et al.
2012/0039539 A1 2/2012 Boiman et al.
2012/0041752 A1 2/2012 Wang et al.
2012/0042014 A1 2/2012 Desai et al.
2012/0042343 A1 2/2012 Laligand et al.
2012/0053815 A1 3/2012 Montanari et al.
2012/0053945 A1 3/2012 Gupta et al.
2012/0056815 A1 3/2012 Mehra
2012/0059655 A1 3/2012 Cartales
2012/0066581 A1 3/2012 Spalink
2012/0078624 A1 3/2012 Yook et al.
2012/0078627 A1 3/2012 Wagner
2012/0082317 A1 4/2012 Pance et al.
2012/0083286 A1 4/2012 Kim et al.
2012/0084086 A1 4/2012 Gilbert et al.
2012/0084634 A1 4/2012 Wong et al.
2012/0088219 A1 4/2012 Briscoe et al.
2012/0089331 A1 4/2012 Schmidt et al.
2012/0108221 A1 5/2012 Thomas et al.
2012/0116770 A1 5/2012 Chen et al.
2012/0117499 A1 5/2012 Mori et al.
2012/0124126 A1 5/2012 Alcazar et al.
2012/0128322 A1 5/2012 Shaffer et al.
2012/0136572 A1 5/2012 Norton
2012/0136985 A1 5/2012 Popescu et al.
2012/0137367 A1 5/2012 Dupont et al.
2012/0149394 A1 6/2012 Singh et al.
2012/0150580 A1 6/2012 Norton
2012/0158293 A1 6/2012 Burnham
2012/0158422 A1 6/2012 Burnham et al.
2012/0159380 A1 6/2012 Kocienda et al.
2012/0163710 A1 6/2012 Skaff et al.
2012/0166196 A1 6/2012 Ju et al.
2012/0173464 A1 7/2012 Tur et al.
2012/0174121 A1 7/2012 Treat et al.
2012/0179457 A1 7/2012 Newman et al.
2012/0185237 A1 7/2012 Gajic et al.
2012/0185781 A1 7/2012 Guzman et al.
2012/0191461 A1 7/2012 Lin et al.
2012/0192096 A1 7/2012 Bowman et al.
2012/0197743 A1 8/2012 Grigg et al.
2012/0197995 A1 8/2012 Caruso
2012/0197998 A1 8/2012 Kessel et al.
2012/0201362 A1 8/2012 Crossan et al.
2012/0209853 A1 8/2012 Desai et al.
2012/0209874 A1 8/2012 Wong et al.
2012/0214141 A1 8/2012 Raya et al.
2012/0214517 A1 8/2012 Singh et al.
2012/0215762 A1 8/2012 Hall et al.
2012/0221339 A1 8/2012 Wang et al.
2012/0221552 A1 8/2012 Reponen et al.
2012/0223889 A1 9/2012 Medlock et al.
2012/0223936 A1 9/2012 Aughey et al.
2012/0232885 A1 9/2012 Barbosa et al.
2012/0232886 A1 9/2012 Capuozzo et al.
2012/0232906 A1 9/2012 Lindahl et al.
2012/0239661 A1 9/2012 Giblin
2012/0239761 A1 9/2012 Linner et al.
2012/0242482 A1 9/2012 Elumalai et al.
2012/0245719 A1 9/2012 Story, Jr. et al.
2012/0245941 A1 9/2012 Cheyer
2012/0245944 A1 9/2012 Gruber et al.
2012/0246064 A1 9/2012 Balkow
2012/0250858 A1 10/2012 Iqbal et al.
2012/0252367 A1 10/2012 Gaglio et al.
2012/0252540 A1 10/2012 Kirigaya
2012/0254143 A1 10/2012 Varma et al.
2012/0254152 A1 10/2012 Park et al.
2012/0254290 A1 10/2012 Naaman
2012/0265528 A1 10/2012 Gruber et al.
2012/0265535 A1 10/2012 Bryant-Rich et al.
2012/0271625 A1 10/2012 Bernard
2012/0271634 A1 10/2012 Lenke
2012/0271635 A1 10/2012 Ljolje

(56) **References Cited**

U.S. PATENT DOCUMENTS

2012/0271640 A1 10/2012 Basir
2012/0271676 A1 10/2012 Aravamudan et al.
2012/0275377 A1 11/2012 Lehane et al.
2012/0284027 A1 11/2012 Mallett et al.
2012/0290300 A1 11/2012 Lee et al.
2012/0295708 A1 11/2012 Hernandez-Abrego et al.
2012/0296649 A1 11/2012 Bansal et al.
2012/0296654 A1 11/2012 Hendrickson et al.
2012/0296891 A1 11/2012 Rangan
2012/0297348 A1 11/2012 Santoro
2012/0303369 A1 11/2012 Brush et al.
2012/0304124 A1 11/2012 Chen et al.
2012/0309363 A1 12/2012 Gruber et al.
2012/0310642 A1 12/2012 Cao et al.
2012/0310649 A1 12/2012 Cannistraro et al.
2012/0310652 A1 12/2012 O'Sullivan
2012/0311478 A1 12/2012 Van Os et al.
2012/0311583 A1 12/2012 Gruber et al.
2012/0311584 A1 12/2012 Gruber et al.
2012/0311585 A1 12/2012 Gruber et al.
2012/0316878 A1 12/2012 Singleton et al.
2012/0317194 A1 12/2012 Tian
2012/0317498 A1 12/2012 Logan et al.
2012/0321112 A1 12/2012 Schubert et al.
2012/0324391 A1 12/2012 Tocci et al.
2012/0327009 A1 12/2012 Fleizach
2012/0330660 A1 12/2012 Jaiswal
2012/0330661 A1 12/2012 Lindahl
2012/0330990 A1 12/2012 Chen et al.
2013/0005405 A1 1/2013 Prociw
2013/0006633 A1 1/2013 Grokop et al.
2013/0006637 A1 1/2013 Kanevsky et al.
2013/0006638 A1 1/2013 Lindahl
2013/0007648 A1 1/2013 Gamon et al.
2013/0013313 A1 1/2013 Shechtman et al.
2013/0027875 A1 1/2013 Zhu et al.
2013/0030804 A1 1/2013 Zavaliagko et al.
2013/0030815 A1 1/2013 Madhvanath et al.
2013/0035942 A1 2/2013 Kim et al.
2013/0035961 A1 2/2013 Yegnanarayanan
2013/0041647 A1 2/2013 Ramerth et al.
2013/0041654 A1 2/2013 Walker et al.
2013/0041661 A1 2/2013 Lee et al.
2013/0041968 A1 2/2013 Cohen et al.
2013/0054550 A1 2/2013 Bolohan
2013/0054609 A1 2/2013 Rajput et al.
2013/0054613 A1 2/2013 Bishop
2013/0054706 A1 2/2013 Graham et al.
2013/0055099 A1 2/2013 Yao et al.
2013/0055147 A1 2/2013 Vasudev et al.
2013/0066832 A1 3/2013 Sheehan et al.
2013/0067307 A1 3/2013 Tian et al.
2013/0073286 A1 3/2013 Bastea-Forte et al.
2013/0080152 A1 3/2013 Brun et al.
2013/0080162 A1 3/2013 Chang et al.
2013/0080167 A1 3/2013 Mozer
2013/0080177 A1 3/2013 Chen
2013/0085755 A1 4/2013 Bringert et al.
2013/0085761 A1 4/2013 Bringert et al.
2013/0090921 A1 4/2013 Liu et al.
2013/0091090 A1 4/2013 Spivack et al.
2013/0095805 A1 4/2013 Lebeau et al.
2013/0097566 A1 4/2013 Berglund
2013/0103391 A1 4/2013 Millmore et al.
2013/0106742 A1 5/2013 Lee et al.
2013/0110505 A1 5/2013 Gruber et al.
2013/0110515 A1 5/2013 Guzzoni et al.
2013/0110518 A1 5/2013 Gruber et al.
2013/0110519 A1 5/2013 Cheyer et al.
2013/0110520 A1 5/2013 Cheyer et al.
2013/0111348 A1 5/2013 Gruber et al.
2013/0111487 A1 5/2013 Cheyer et al.
2013/0115927 A1 5/2013 Gruber et al.
2013/0117022 A1 5/2013 Chen et al.
2013/0124189 A1 5/2013 Baldwin et al.
2013/0132871 A1 5/2013 Zeng et al.
2013/0144594 A1 6/2013 Bangalore et al.
2013/0144616 A1 6/2013 Bangalore et al.
2013/0151339 A1 6/2013 Kim et al.
2013/0152092 A1 6/2013 Yadgar et al.
2013/0158977 A1 6/2013 Senior
2013/0165232 A1 6/2013 Nelson et al.
2013/0166442 A1 6/2013 Nakajima et al.
2013/0170738 A1 7/2013 Capuozzo et al.
2013/0172022 A1 7/2013 Seymour et al.
2013/0176592 A1 7/2013 Sasaki
2013/0179440 A1 7/2013 Gordon
2013/0185059 A1 7/2013 Riccardi et al.
2013/0185074 A1 7/2013 Gruber et al.
2013/0185081 A1 7/2013 Cheyer et al.
2013/0185336 A1 7/2013 Singh et al.
2013/0191117 A1 7/2013 Atti et al.
2013/0197911 A1 8/2013 Wei et al.
2013/0218553 A1 8/2013 Fujii et al.
2013/0218560 A1 8/2013 Hsiao et al.
2013/0225128 A1 8/2013 Gomar
2013/0231917 A1 9/2013 Naik
2013/0235987 A1 9/2013 Arroniz-Escobar et al.
2013/0238647 A1 9/2013 Thompson
2013/0244615 A1 9/2013 Miller et al.
2013/0246048 A1 9/2013 Nagase et al.
2013/0253911 A1 9/2013 Petri et al.
2013/0253912 A1 9/2013 Medlock et al.
2013/0275117 A1 10/2013 Winer
2013/0275164 A1 10/2013 Gruber et al.
2013/0275875 A1 10/2013 Gruber et al.
2013/0275899 A1 10/2013 Schubert et al.
2013/0283168 A1 10/2013 Brown et al.
2013/0289991 A1 10/2013 Eshwar et al.
2013/0289993 A1 10/2013 Rao et al.
2013/0289994 A1 10/2013 Newman et al.
2013/0297319 A1 11/2013 Kim
2013/0297348 A1 11/2013 Cardoza et al.
2013/0304479 A1 11/2013 Teller et al.
2013/0304758 A1 11/2013 Gruber et al.
2013/0304815 A1 11/2013 Puente et al.
2013/0307855 A1 11/2013 Lamb et al.
2013/0307997 A1 11/2013 O'Keefe et al.
2013/0308922 A1 11/2013 Sano et al.
2013/0322634 A1 12/2013 Bennett et al.
2013/0325436 A1 12/2013 Wang et al.
2013/0325443 A1 12/2013 Begeja et al.
2013/0325448 A1 12/2013 Levien et al.
2013/0325481 A1 12/2013 Van Os et al.
2013/0325484 A1 12/2013 Chakladar et al.
2013/0325979 A1 12/2013 Mansfield et al.
2013/0329023 A1 12/2013 Suplee, III et al.
2013/0332164 A1 12/2013 Nalk
2013/0332168 A1 12/2013 Kim et al.
2013/0332400 A1 12/2013 González
2013/0346068 A1 12/2013 Solem et al.
2014/0006012 A1 1/2014 Zhou et al.
2014/0006025 A1 1/2014 Krishnan et al.
2014/0006027 A1 1/2014 Kim et al.
2014/0006153 A1 1/2014 Thangam et al.
2014/0012580 A1 1/2014 Ganong et al.
2014/0019116 A1 1/2014 Lundberg et al.
2014/0019133 A1 1/2014 Bao et al.
2014/0028735 A1 1/2014 Williams et al.
2014/0033071 A1 1/2014 Gruber et al.
2014/0039894 A1 2/2014 Shostak
2014/0040274 A1 2/2014 Aravamudan et al.
2014/0040748 A1 2/2014 Lemay et al.
2014/0040918 A1 2/2014 Li et al.
2014/0052791 A1 2/2014 Chakra et al.
2014/0053082 A1 2/2014 Park et al.
2014/0059030 A1 2/2014 Hakkani-Tur et al.
2014/0067371 A1 3/2014 Liensberger
2014/0068751 A1 3/2014 Last et al.
2014/0074470 A1 3/2014 Jansche et al.
2014/0074472 A1 3/2014 Lin et al.
2014/0074815 A1 3/2014 Plimton
2014/0078065 A1 3/2014 Akkok et al.
2014/0080428 A1 3/2014 Rhoads et al.

(56) **References Cited**

U.S. PATENT DOCUMENTS

2014/0081633 A1 3/2014 Badaskar et al.
2014/0082501 A1 3/2014 Bae et al.
2014/0086458 A1 3/2014 Rogers et al.
2014/0087711 A1 3/2014 Geyer et al.
2014/0095171 A1 4/2014 Lynch et al.
2014/0098247 A1 4/2014 Rao et al.
2014/0108017 A1 4/2014 Mason et al.
2014/0118155 A1 5/2014 Bowers et al.
2014/0122086 A1 5/2014 Kapur et al.
2014/0135036 A1 5/2014 Bonanni et al.
2014/0136187 A1 5/2014 Wolverton et al.
2014/0136195 A1 5/2014 Abdossalami et al.
2014/0136212 A1 5/2014 Kwon et al.
2014/0136946 A1 5/2014 Matas
2014/0142923 A1 5/2014 Jones et al.
2014/0143721 A1 5/2014 Suzuki et al.
2014/0146200 A1 5/2014 Scott et al.
2014/0152577 A1 6/2014 Yuen et al.
2014/0155031 A1 6/2014 Lee et al.
2014/0157422 A1 6/2014 Livshits et al.
2014/0163951 A1 6/2014 Nikoulina et al.
2014/0164532 A1 6/2014 Lynch et al.
2014/0173460 A1 6/2014 Kim
2014/0180689 A1 6/2014 Kim et al.
2014/0188477 A1 7/2014 Zhang
2014/0195251 A1 7/2014 Zeinstra et al.
2014/0195252 A1 7/2014 Gruber et al.
2014/0203939 A1 7/2014 Harrington et al.
2014/0207582 A1 7/2014 Flinn et al.
2014/0218372 A1 8/2014 Missig et al.
2014/0222436 A1 8/2014 Binder et al.
2014/0223377 A1 8/2014 Shaw et al.
2014/0223481 A1 8/2014 Fundament
2014/0232656 A1 8/2014 Pasquero et al.
2014/0236595 A1 8/2014 Gray
2014/0236986 A1 8/2014 Guzman
2014/0237042 A1 8/2014 Ahmed et al.
2014/0244257 A1 8/2014 Colibro et al.
2014/0244258 A1 8/2014 Song et al.
2014/0244271 A1 8/2014 Lindahl
2014/0247383 A1 9/2014 Dave et al.
2014/0247926 A1 9/2014 Gainsboro et al.
2014/0249817 A1 9/2014 Hart et al.
2014/0250046 A1 9/2014 Winn et al.
2014/0267022 A1 9/2014 Kim
2014/0267599 A1 9/2014 Drouin et al.
2014/0274203 A1 9/2014 Ganong et al.
2014/0274211 A1 9/2014 Sejnoha et al.
2014/0278391 A1 9/2014 Braho et al.
2014/0278406 A1 9/2014 Tsumura et al.
2014/0278413 A1 9/2014 Pitschel et al.
2014/0278435 A1 9/2014 Ganong et al.
2014/0278443 A1 9/2014 Gunn et al.
2014/0278513 A1 9/2014 Prakash et al.
2014/0280138 A1 9/2014 Li et al.
2014/0280292 A1 9/2014 Skinder
2014/0280353 A1 9/2014 Delaney et al.
2014/0281983 A1 9/2014 Xian et al.
2014/0282586 A1 9/2014 Shear et al.
2014/0282743 A1 9/2014 Howard et al.
2014/0288990 A1 9/2014 Moore et al.
2014/0297281 A1 10/2014 Togawa et al.
2014/0297284 A1 10/2014 Gruber et al.
2014/0304605 A1 10/2014 Ohmura et al.
2014/0316585 A1 10/2014 Boesveld et al.
2014/0317502 A1 10/2014 Brown et al.
2014/0337048 A1 11/2014 Brown et al.
2014/0337266 A1 11/2014 Wolverton et al.
2014/0337814 A1 11/2014 Kalns et al.
2014/0351760 A1 11/2014 Skory et al.
2014/0358519 A1 12/2014 Mirkin et al.
2014/0365209 A1 12/2014 Evermann
2014/0365227 A1 12/2014 Cash et al.
2014/0365880 A1 12/2014 Bellegarda
2014/0365885 A1 12/2014 Carson et al.
2014/0365895 A1 12/2014 Paulson et al.
2015/0003797 A1 1/2015 Schmidt
2015/0006178 A1 1/2015 Peng et al.
2015/0006199 A1 1/2015 Snider et al.
2015/0012271 A1 1/2015 Peng et al.
2015/0039292 A1 2/2015 Suleman et al.
2015/0039305 A1 2/2015 Huang
2015/0045003 A1 2/2015 Vora et al.
2015/0046537 A1 2/2015 Rakib
2015/0050633 A1 2/2015 Christmas et al.
2015/0058013 A1 2/2015 Pakhomov et al.
2015/0065200 A1 3/2015 Namgung et al.
2015/0066506 A1 3/2015 Romano et al.
2015/0066516 A1 3/2015 Nishikawa et al.
2015/0067485 A1 3/2015 Kim et al.
2015/0073804 A1 3/2015 Senior et al.
2015/0088511 A1 3/2015 Bharadwaj et al.
2015/0095031 A1 4/2015 Conkie et al.
2015/0100316 A1 4/2015 Williams et al.
2015/0113407 A1 4/2015 Hoffert et al.
2015/0127350 A1 5/2015 Agiomyrgiannakis
2015/0133109 A1 5/2015 Freeman et al.
2015/0142420 A1 5/2015 Sarikaya et al.
2015/0148013 A1 5/2015 Baldwin et al.
2015/0149354 A1 5/2015 Mccoy
2015/0149469 A1 5/2015 Xu et al.
2015/0161370 A1 6/2015 North et al.
2015/0170664 A1 6/2015 Doherty et al.
2015/0172463 A1 6/2015 Quast et al.
2015/0178388 A1 6/2015 Winnemoeller et al.
2015/0186012 A1 7/2015 Coleman et al.
2015/0193379 A1 7/2015 Mehta
2015/0193391 A1 7/2015 Khvostichenko et al.
2015/0193392 A1 7/2015 Greenblatt et al.
2015/0194152 A1 7/2015 Katuri et al.
2015/0195379 A1 7/2015 Zhang et al.
2015/0199960 A1 7/2015 Huo et al.
2015/0205858 A1 7/2015 Xie et al.
2015/0228281 A1 8/2015 Raniere
2015/0234636 A1 8/2015 Barnes, Jr.
2015/0234800 A1 8/2015 Patrick et al.
2015/0243278 A1 8/2015 Kibre et al.
2015/0245154 A1 8/2015 Dadu et al.
2015/0255071 A1 9/2015 Chiba
2015/0256873 A1 9/2015 Klein et al.
2015/0261496 A1 9/2015 Faaborg et al.
2015/0279360 A1 10/2015 Mengibar et al.
2015/0287409 A1 10/2015 Jang
2015/0294516 A1 10/2015 Chiang
2015/0309997 A1 10/2015 Lee et al.
2015/0324041 A1 11/2015 Varley et al.
2015/0324334 A1 11/2015 Lee et al.
2015/0331711 A1 11/2015 Huang et al.
2015/0339049 A1 11/2015 Kasemset et al.
2015/0339391 A1 11/2015 Kang et al.
2015/0340040 A1 11/2015 Mun et al.
2015/0340042 A1 11/2015 Sejnoha et al.
2015/0347382 A1 12/2015 Dolfing et al.
2015/0347393 A1 12/2015 Futrell et al.
2015/0348547 A1 12/2015 Paulik et al.
2015/0348548 A1 12/2015 Piernot et al.
2015/0348549 A1 12/2015 Giuli et al.
2015/0348551 A1 12/2015 Gruber et al.
2015/0370531 A1 12/2015 Faaborg
2015/0370780 A1 12/2015 Wang et al.
2016/0027431 A1 1/2016 Kurzweil et al.
2016/0028666 A1 1/2016 Li
2016/0077794 A1 3/2016 Kim et al.
2016/0091967 A1 3/2016 Prokofieva et al.
2016/0093291 A1 3/2016 Kim
2016/0093298 A1 3/2016 Naik et al.
2016/0093304 A1 3/2016 Kim et al.
2016/0094979 A1 3/2016 Naik et al.
2016/0147725 A1 5/2016 Patten et al.
2016/0180844 A1 6/2016 Vanblon et al.
2016/0189717 A1 6/2016 Kannan et al.
2016/0212488 A1 7/2016 Os et al.

(56) **References Cited**

U.S. PATENT DOCUMENTS

2016/0260436	A1	9/2016	Lemay et al.
2016/0275941	A1	9/2016	Bellegarda et al.

FOREIGN PATENT DOCUMENTS

CN	1263385	A	8/2000
CN	1274440	A	11/2000
CN	1369858	A	9/2002
CN	1378156	A	11/2002
CN	1383109	A	12/2002
CN	1407795	A	4/2003
CN	1125436	C	10/2003
CN	1471098	A	1/2004
CN	1494695	A	5/2004
CN	1535519	A	10/2004
CN	1640191	A	7/2005
CN	1673939	A	9/2005
CN	1864204	A	11/2006
CN	1898721	A	1/2007
CN	2865153	Y	1/2007
CN	1959628	A	5/2007
CN	1975715	A	6/2007
CN	1995917	A	7/2007
CN	101008942	A	8/2007
CN	101162153	A	4/2008
CN	101179754	A	5/2008
CN	101183525	A	5/2008
CN	101188644	A	5/2008
CN	101228503	A	7/2008
CN	101233741	A	7/2008
CN	101246020	A	8/2008
CN	101297541	A	10/2008
CN	101427244	A	5/2009
CN	101535983	A	9/2009
CN	101632316	A	1/2010
CN	101636736	A	1/2010
CN	101673544	A	3/2010
CN	101847405	A	9/2010
CN	101894547	A	11/2010
CN	101939740	A	1/2011
CN	101951553	A	1/2011
CN	102160043	A	8/2011
CN	102246136	A	11/2011
CN	202035047	U	11/2011
CN	202092650	U	12/2011
DE	3837590	A1	5/1990
DE	4126902	A1	2/1992
DE	4334773	A1	4/1994
DE	4445023	A1	6/1996
DE	102004029203	A1	12/2005
DE	19841541	B4	12/2007
DE	102008024258	A1	11/2009
EP	30390	A1	6/1981
EP	57514	A1	8/1982
EP	59880	A2	9/1982
EP	138061	A1	4/1985
EP	140777	A1	5/1985
EP	218859	A2	4/1987
EP	262938	A1	4/1988
EP	138061	B1	6/1988
EP	283995	A2	9/1988
EP	293259	A2	11/1988
EP	299572	A2	1/1989
EP	313975	A2	5/1989
EP	314908	A2	5/1989
EP	327408	A2	8/1989
EP	389271	A2	9/1990
EP	411675	A2	2/1991
EP	441089	A2	8/1991
EP	464712	A2	1/1992
EP	476972	A2	3/1992
EP	534410	A2	3/1993
EP	558312	A1	9/1993
EP	559349	A1	9/1993
EP	570660	A1	11/1993
EP	575146	A2	12/1993
EP	578604	A1	1/1994
EP	586996	A2	3/1994
EP	609030	A1	8/1994
EP	651543	A2	5/1995
EP	679005	A1	10/1995
EP	795811	A1	9/1997
EP	476972	B1	5/1998
EP	845894	A2	6/1998
EP	852052	A1	7/1998
EP	863453	A1	9/1998
EP	863469	A2	9/1998
EP	867860	A2	9/1998
EP	869697	A2	10/1998
EP	559349	B1	1/1999
EP	889626	A1	1/1999
EP	917077	A2	5/1999
EP	691023	B1	9/1999
EP	946032	A2	9/1999
EP	981236	A1	2/2000
EP	982732	A1	3/2000
EP	984430	A2	3/2000
EP	1001588	A2	5/2000
EP	1014277	A1	6/2000
EP	1028425	A2	8/2000
EP	1028426	A2	8/2000
EP	1047251	A2	10/2000
EP	1052566	A1	11/2000
EP	1076302	A1	2/2001
EP	1091615	A1	4/2001
EP	1094406	A2	4/2001
EP	1107229	A2	6/2001
EP	1229496	A2	8/2002
EP	1233600	A2	8/2002
EP	1245023	A1	10/2002
EP	1246075	A2	10/2002
EP	1280326	A1	1/2003
EP	1291848	A2	3/2003
EP	1311102	A1	5/2003
EP	1315084	A1	5/2003
EP	1315086	A1	5/2003
EP	1347361	A1	9/2003
EP	1368961	A2	12/2003
EP	1379061	A2	1/2004
EP	1432219	A1	6/2004
EP	1435620	A1	7/2004
EP	1480421	A1	11/2004
EP	1517228	A2	3/2005
EP	1536612	A1	6/2005
EP	1566948	A1	8/2005
EP	1650938	A1	4/2006
EP	1675025	A2	6/2006
EP	1693829	A1	8/2006
EP	1699042	A1	9/2006
EP	1739546	A2	1/2007
EP	1181802	B1	2/2007
EP	1818786	A1	8/2007
EP	1892700	A1	2/2008
EP	1912205	A2	4/2008
EP	1939860	A1	7/2008
EP	651543	B1	9/2008
EP	1909263	B1	1/2009
EP	1335620	B1	3/2009
EP	2069895	A1	6/2009
EP	2094032	A1	8/2009
EP	2107553	A1	10/2009
EP	2109295	A1	10/2009
EP	1720375	B1	7/2010
EP	2205010	A1	7/2010
EP	2309491	A1	4/2011
EP	2400373	A1	12/2011
EP	2431842	A2	3/2012
EP	2551784	A1	1/2013
EP	2555536	A1	2/2013
EP	2575128	A2	4/2013
EP	2733598	A2	5/2014
EP	2801890	A1	11/2014
EP	2801972	A1	11/2014
EP	2940556	A1	11/2015

(56) **References Cited**

FOREIGN PATENT DOCUMENTS

FR	2911201	A1	7/2008
GB	2293667	A	4/1996
GB	2310559	A	8/1997
GB	2323694	A	9/1998
GB	2342802	A	4/2000
GB	2343285	A	5/2000
GB	2346500	A	8/2000
GB	2352377	A	1/2001
GB	2384399	A	7/2003
GB	2402855	A	12/2004
GB	2445436	A	7/2008
GB	2445667	A	7/2008
IT	FI20010199	A1	4/2003
JP	55-80084	A	6/1980
JP	57-41731	A	3/1982
JP	59-57336	A	4/1984
JP	62-153326	A	7/1987
JP	1-500631	A	3/1989
JP	1-254742	A	10/1989
JP	2-86397	A	3/1990
JP	2-153415	A	6/1990
JP	3-113578	A	5/1991
JP	4-236624	A	8/1992
JP	5-79951	A	3/1993
JP	5-165459	A	7/1993
JP	5-293126	A	11/1993
JP	6-19965	A	1/1994
JP	6-69954	A	3/1994
JP	6-274586	A	9/1994
JP	6-332617	A	12/1994
JP	7-199379	A	8/1995
JP	7-219961	A	8/1995
JP	7-320051	A	12/1995
JP	7-320079	A	12/1995
JP	8-63330	A	3/1996
JP	8-185265	A	7/1996
JP	8-223281	A	8/1996
JP	8-227341	A	9/1996
JP	9-18585	A	1/1997
JP	9-27000	A	1/1997
JP	9-55792	A	2/1997
JP	9-259063	A	10/1997
JP	9-265457	A	10/1997
JP	10-31497	A	2/1998
JP	10-78952	A	3/1998
JP	10-105324	A	4/1998
JP	10-274997	A	10/1998
JP	10-320169	A	12/1998
JP	11-06743	A	1/1999
JP	11-45241	A	2/1999
JP	11-136278	A	5/1999
JP	11-231886	A	8/1999
JP	11-265400	A	9/1999
JP	2000-32140	A	1/2000
JP	2000-90119	A	3/2000
JP	2000-99225	A	4/2000
JP	2000-134407	A	5/2000
JP	2000-163031	A	6/2000
JP	2000-207167	A	7/2000
JP	2000-216910	A	8/2000
JP	2000-224663	A	8/2000
JP	2000-272349	A	10/2000
JP	2000-331004	A	11/2000
JP	2000-339137	A	12/2000
JP	2000-352988	A	12/2000
JP	2000-352989	A	12/2000
JP	2001-13978	A	1/2001
JP	2001-14319	A	1/2001
JP	2001-22498	A	1/2001
JP	2001-34289	A	2/2001
JP	2001-34290	A	2/2001
JP	2001-56233	A	2/2001
JP	2001-109493	A	4/2001
JP	2001-125896	A	5/2001
JP	2001-148899	A	5/2001
JP	2001-273283	A	10/2001
JP	2001-282813	A	10/2001
JP	2001-296880	A	10/2001
JP	2002-14954	A	1/2002
JP	2002-24212	A	1/2002
JP	2002-30676	A	1/2002
JP	2002-41276	A	2/2002
JP	2002-41624	A	2/2002
JP	2002-82748	A	3/2002
JP	2002-82893	A	3/2002
JP	2002-132804	A	5/2002
JP	2002-169588	A	6/2002
JP	2002-230021	A	8/2002
JP	2002-524806	A	8/2002
JP	2002-281562	A	9/2002
JP	2002-534716	A	10/2002
JP	2002-342033	A	11/2002
JP	2002-342212	A	11/2002
JP	2002-344880	A	11/2002
JP	2002-542501	A	12/2002
JP	2003-15682	A	1/2003
JP	2003-44091	A	2/2003
JP	2003-84877	A	3/2003
JP	2003-517158	A	5/2003
JP	2003-233568	A	8/2003
JP	2003-244317	A	8/2003
JP	2003-527656	A	9/2003
JP	2003-288356	A	10/2003
JP	2003-533909	A	11/2003
JP	2004-48804	A	2/2004
JP	2004-54080	A	2/2004
JP	2004-505322	A	2/2004
JP	2004-505525	A	2/2004
JP	2004-86356	A	3/2004
JP	2004-94936	A	3/2004
JP	2004-117905	A	4/2004
JP	2004-152063	A	5/2004
JP	2004-523004	A	7/2004
JP	2004-295837	A	10/2004
JP	2004-534268	A	11/2004
JP	2004-347786	A	12/2004
JP	2005-55782	A	3/2005
JP	2005-63257	A	3/2005
JP	2005-70645	A	3/2005
JP	2005-80094	A	3/2005
JP	2005-86624	A	3/2005
JP	2005-506602	A	3/2005
JP	2005-92441	A	4/2005
JP	2005-149481	A	6/2005
JP	2005-181386	A	7/2005
JP	2005-189454	A	7/2005
JP	2005-221678	A	8/2005
JP	2005-283843	A	10/2005
JP	2005-311864	A	11/2005
JP	2005-332212	A	12/2005
JP	2006-4274	A	1/2006
JP	2006-23860	A	1/2006
JP	2006-30447	A	2/2006
JP	2006-31092	A	2/2006
JP	2006-59094	A	3/2006
JP	2006-80617	A	3/2006
JP	2006-107438	A	4/2006
JP	2006-146008	A	6/2006
JP	2006-146182	A	6/2006
JP	2006-155368	A	6/2006
JP	2006-189394	A	7/2006
JP	2006-195637	A	7/2006
JP	2006-201870	A	8/2006
JP	2006-208696	A	8/2006
JP	2006-244296	A	9/2006
JP	2006-267328	A1	10/2006
JP	2006-302091	A	11/2006
JP	2006-526185	A	11/2006
JP	2007-4633	A	1/2007
JP	2007-17990	A	1/2007
JP	2007-500903	A	1/2007
JP	2007-53796	A	3/2007
JP	2007-79690	A	3/2007
JP	2007-171534	A	7/2007

(56) **References Cited**

FOREIGN PATENT DOCUMENTS

JP	2007-193794	A	8/2007
JP	2007-206317	A	8/2007
JP	2007-264471	A	10/2007
JP	2007-264792	A	10/2007
JP	2007-264892	A	10/2007
JP	2007-299352	A	11/2007
JP	2007-325089	A	12/2007
JP	2008-21002	A	1/2008
JP	2008-26381	A	2/2008
JP	2008-39928	A	2/2008
JP	2008-58813	A	3/2008
JP	2008-90545	A	4/2008
JP	2008-97003	A	4/2008
JP	2008-134949	A	6/2008
JP	2008-526101	A	7/2008
JP	2008-185693	A	8/2008
JP	2008-198022	A	8/2008
JP	2008-217468	A	9/2008
JP	2008-228129	A	9/2008
JP	2008-233678	A	10/2008
JP	2008-236448	A	10/2008
JP	2008-252161	A	10/2008
JP	2008-268684	A	11/2008
JP	2008-271481	A	11/2008
JP	2009-503623	A	1/2009
JP	2009-36999	A	2/2009
JP	2009-47920	A	3/2009
JP	2009-98490	A	5/2009
JP	2009-140444	A	6/2009
JP	2009-186989	A	8/2009
JP	2009-193448	A	8/2009
JP	2009-193457	A	8/2009
JP	2009-193532	A	8/2009
JP	2009-205367	A	9/2009
JP	2009-294913	A	12/2009
JP	2009-294946	A	12/2009
JP	2010-66519	A	3/2010
JP	2010-78979	A	4/2010
JP	2010-108378	A	5/2010
JP	2010-518526	A	5/2010
JP	2010-157207	A	7/2010
JP	2010-224236	A	10/2010
JP	4563106	B2	10/2010
JP	2010-535377	A	11/2010
JP	2010-287063	A	12/2010
JP	2011-41026	A	2/2011
JP	2011-45005	A	3/2011
JP	2011-59659	A	3/2011
JP	2011-81541	A	4/2011
JP	2011-525045	A	9/2011
JP	2013-511214	A	3/2013
JP	2013-517566	A	5/2013
JP	2013-527947	A	7/2013
KR	10-1999-0073234	A	10/1999
KR	2001-0093654	A	10/2001
KR	10-2001-0102132	A	11/2001
KR	2002-0013984	A	2/2002
KR	2002-0057262	A	7/2002
KR	2002-0064149	A	8/2002
KR	2002-0069952	A	9/2002
KR	2003-0016993	A	3/2003
KR	10-2004-0014835	A	2/2004
KR	10-2004-0044632	A	5/2004
KR	10-2005-0083561	A	8/2005
KR	10-2005-0090568	A	9/2005
KR	10-2006-0011603	A	2/2006
KR	10-2006-0012730	A	2/2006
KR	10-2006-0055313	A	5/2006
KR	10-2006-0073574	A	6/2006
KR	10-2006-0091469	A	8/2006
KR	10-2007-0024262	A	3/2007
KR	10-2007-0071675	A	7/2007
KR	10-2007-0094767	A	9/2007
KR	10-0757496	B1	9/2007
KR	10-2007-0100837	A	10/2007
KR	10-0776800	B1	11/2007
KR	10-0801227	B1	2/2008
KR	10-0810500	B1	3/2008
KR	10-2008-0033070	A	4/2008
KR	10-0819928	B1	4/2008
KR	10-2008-0049647	A	6/2008
KR	10-2008-0059332	A	6/2008
KR	10-2008-0109322	A	12/2008
KR	10-2009-0001716	A	1/2009
KR	10-2009-0028464	A	3/2009
KR	10-2009-0030117	A	3/2009
KR	10-2009-0086805	A	8/2009
KR	10-0920267	B1	10/2009
KR	10-2009-0122944	A	12/2009
KR	10-2009-0127961	A	12/2009
KR	10-2010-0015958	A	2/2010
KR	10-2010-0048571	A	5/2010
KR	10-2010-0119519	A	11/2010
KR	10-2011-0043644	A	4/2011
KR	10-1032792	B1	5/2011
KR	10-2011-0068490	A	6/2011
KR	10-2011-0072847	A	6/2011
KR	10-2011-0113414	A	10/2011
KR	10-2011-0115134	A	10/2011
KR	10-2012-0020164	A	3/2012
KR	10-2012-0031722	A	4/2012
KR	10-2012-0120316	A	11/2012
KR	10-2012-0137435	A	12/2012
KR	10-2012-0138826	A	12/2012
KR	10-1193668	B1	12/2012
NL	1014847	C	10/2001
RU	2273106	C2	3/2006
RU	2349970	C2	3/2009
RU	2353068	C2	4/2009
RU	2364917	C2	8/2009
TW	468323	B	12/2001
TW	200601264	A	1/2006
TW	200638337	A	11/2006
TW	200643744	A	12/2006
TW	200801988	A	1/2008
TW	I301373	B	9/2008
TW	M348993	U	1/2009
TW	200943903	A	10/2009
TW	201018258	A	5/2010
TW	201027515	A1	7/2010
TW	201028996	A1	8/2010
TW	201110108	A1	3/2011
TW	201227715	A1	7/2012
TW	201245989	A1	11/2012
TW	201312548	A1	3/2013
WO	1993/020640	A1	10/1993
WO	1994/016434	A1	7/1994
WO	1994/029788	A1	12/1994
WO	1995/002221	A1	1/1995
WO	1995/016950	A1	6/1995
WO	1995/017746	A1	6/1995
WO	1997/010586	A1	3/1997
WO	1997/026612	A1	7/1997
WO	1997/029614	A1	8/1997
WO	1997/038488	A1	10/1997
WO	1997/049044	A1	12/1997
WO	1998/009270	A1	3/1998
WO	1998/033111	A1	7/1998
WO	1998/041956	A1	9/1998
WO	1999/001834	A1	1/1999
WO	1999/008238	A1	2/1999
WO	1999/016181	A1	4/1999
WO	1999/056227	A1	11/1999
WO	2000/014727	A1	3/2000
WO	2000/014728	A1	3/2000
WO	2000/019697	A1	4/2000
WO	2000/022820	A1	4/2000
WO	2000/029964	A1	5/2000
WO	2000/030070	A2	5/2000
WO	2000/038041	A1	6/2000
WO	2000/041065	A1	7/2000
WO	2000/044173	A1	7/2000
WO	2000/060435	A2	10/2000
WO	2000/060435	A3	10/2000

(56) **References Cited**

FOREIGN PATENT DOCUMENTS

WO	2000/063766	A1	10/2000
WO	2000/068936	A1	11/2000
WO	2001/006489	A1	1/2001
WO	2001/030046	A2	4/2001
WO	2001-030047	A2	4/2001
WO	2001/033569	A1	5/2001
WO	2001/035391	A1	5/2001
WO	2001/044912	A2	6/2001
WO	2001/046946	A1	6/2001
WO	2001/065413	A1	9/2001
WO	2001/067753	A1	9/2001
WO	2001/071480	A2	9/2001
WO	2002/010900	A2	2/2002
WO	2002/025610	A1	3/2002
WO	2002/031814	A1	4/2002
WO	2002/037469	A2	5/2002
WO	2002/049253	A2	6/2002
WO	2002/071259	A1	9/2002
WO	2002/073603	A1	9/2002
WO	2003/003152	A2	1/2003
WO	2003/003765	A1	1/2003
WO	2003/023786	A2	3/2003
WO	2003/036457	A2	5/2003
WO	2003/041364	A2	5/2003
WO	2003/049494	A1	6/2003
WO	2003/056789	A1	7/2003
WO	2003/067202	A2	8/2003
WO	2003/084196	A1	10/2003
WO	2003/094489	A1	11/2003
WO	2003/105125	A1	12/2003
WO	2003/107179	A1	12/2003
WO	2004/008801	A1	1/2004
WO	2004/025938	A1	3/2004
WO	2004/047415	A1	6/2004
WO	2004/055637	A2	7/2004
WO	2004/057486	A1	7/2004
WO	2004/061850	A1	7/2004
WO	2004/084413	A2	9/2004
WO	2005/003920	A2	1/2005
WO	2005/008505	A1	1/2005
WO	2005/008899	A1	1/2005
WO	2005/010725	A2	2/2005
WO	2005/027472	A2	3/2005
WO	2005/027485	A1	3/2005
WO	2005/031737	A1	4/2005
WO	2005/034082	A1	4/2005
WO	2005/034085	A1	4/2005
WO	2005/041455	A1	5/2005
WO	2005/059895	A1	6/2005
WO	2005/064592	A1	7/2005
WO	2005/069171	A1	7/2005
WO	2005/101176	A2	10/2005
WO	2006/020305	A2	2/2006
WO	2006/037545	A2	4/2006
WO	2006/054724	A1	5/2006
WO	2006/056822	A1	6/2006
WO	2006/078246	A1	7/2006
WO	2006/084144	A2	8/2006
WO	2006/101649	A2	9/2006
WO	2006/129967	A1	12/2006
WO	2006/133571	A1	12/2006
WO	2007/002753	A2	1/2007
WO	2007/036762	A1	4/2007
WO	2007/080559	A2	7/2007
WO	2007/083894	A1	7/2007
WO	2008/030970	A2	3/2008
WO	2008/071231	A1	6/2008
WO	2008/085742	A2	7/2008
WO	2008/098900	A2	8/2008
WO	2008/109835	A2	8/2008
WO	2008/120036	A1	10/2008
WO	2008/130095	A1	10/2008
WO	2008/140236	A1	11/2008
WO	2008/142472	A1	11/2008
WO	2008/153639	A1	12/2008
WO	2009/009240	A2	1/2009
WO	2009/016631	A2	2/2009
WO	2009/017280	A1	2/2009
WO	2009/075912	A1	6/2009
WO	2009/104126	A1	8/2009
WO	2009/156438	A1	12/2009
WO	2009/156978	A1	12/2009
WO	2010/075623	A1	7/2010
WO	2010/141802	A1	12/2010
WO	2011/057346	A1	5/2011
WO	2011/060106	A1	5/2011
WO	2011/088053	A2	7/2011
WO	2011/093025	A1	8/2011
WO	2011/116309	A1	9/2011
WO	2011/133543	A1	10/2011
WO	2011/150730	A1	12/2011
WO	2011/163350	A1	12/2011
WO	2012/154317	A1	11/2012
WO	2012/155079	A2	11/2012
WO	2012/167168	A2	12/2012
WO	2013/022135	A1	2/2013
WO	2013/048880	A1	4/2013
WO	2013/169842	A2	11/2013
WO	2013/173511	A2	11/2013
WO	2013/184953	A1	12/2013
WO	2014/028797	A1	2/2014
WO	2014/031505	A1	2/2014
WO	2014/078965	A1	5/2014
WO	2014/143959	A2	9/2014
WO	2014/144579	A1	9/2014
WO	2014/197336	A1	12/2014
WO	2015/030796	A1	3/2015
WO	2015/084659	A1	6/2015

OTHER PUBLICATIONS

2007 Lexus GS 450h 4 dr Sedan (3.5L 6cyl Gas/Electric Hybrid CVT), available at <http://review.cnet.com/4505-10865_16-31833144.html>, retrieved on Aug. 3, 2006, 10 pages.

Abcom Pty. Ltd. "12.1 925 Candela Mobile PC", LCDHardware.com, available at <http://www.lcdhardware.com/panel/12_1_panel/default.asp.>, retrieved on Dec. 19, 2002, 2 pages.

ABF Software, "Lens-Magnifying Glass 1.5", available at <http://download.com/3000-2437-10262078.html?tag=1st-0-1>, retrieved on Feb. 11, 2004, 1 page.

Abut et al., "Low-Rate Speech Encoding Using Vector Quantization and Subband Coding", (Proceedings of the IEEE International Acoustics, Speech and Signal Processing Conference, Apr. 1986), as reprinted in Vector Quantization IEEE Press, 1990, pp. 312-315.

Abut et al., "Vector Quantization of Speech and Speech-Like Waveforms", (IEEE Transactions on Acoustics, Speech, and Signal Processing, Jun. 1982), as reprinted in Vector Quantization (IEEE Press, 1990), 1990, pp. 258-270.

Acero et al., "Environmental Robustness in Automatic Speech Recognition", International Conference on Acoustics, Speech and Signal Processing (ICASSP'90), Apr. 1990, 4 pages.

Acero et al., "Robust Speech Recognition by Normalization of the Acoustic Space", International Conference on Acoustics, Speech and Signal Processing, 1991, 4 pages.

Adium, "AboutAdium—Adium X—Trac", available at <http://web.archive.org/web/20070819113247/http://trac.adiumx.com/wiki/AboutAdium>, retrieved on Nov. 25, 2011, 2 pages.

Adobe.com, "Reading PDF Documents with Adobe Reader 6.0—A Guide for People with Disabilities", Available online at "https://www.adobe.com/enterprise/accessiblilty/pdfs/acro6_cg_ue.pdf", Jan. 2004, 76 pages.

Agnas et al., "Spoken Language Translator: First-Year Report", SICS (ISSN 0283-3638). SRI and Telia Research AB, Jan. 1994, 161 pages.

Ahlberg et al., "The Alphaslider: A Compact and Rapid Selector", CHI '94 Proceedings of the SIGCHI Conference on Human Factors in Computing Systems, Apr. 1994, pp. 365-371.

Ahlberg et al., "Visual Information Seeking: Tight Coupling of Dynamic Query Filters with Starfield Displays", Proceedings of the SIGCHI Conference on Human Factors in Computing Systems, Apr. 24-28, 1994, pp. 313-317.

(56) **References Cited**

OTHER PUBLICATIONS

Ahlbom et al., Modeling Spectral Speech Transitions Using Temporal Decomposition Techniques, IEEE International Conference of Acoustics, Speech and Signal Processing (ICASSP'87), vol. 12, Apr. 1987, 4 pages.
Ahlstrom et al., "Overcoming Touchscreen User Fatigue by Workplace Design", CHI '92 Posters and Short Talks of the 1992 SIGCHI Conference on Human Factors in Computing Systems, 1992, pp. 101-102.
Ahmed et al., "Intelligent Natural Language Query Processor", TENCON '89, Fourth IEEE Region 10 International Conference, Nov. 22-24, 1989, pp. 47-49.
Ahuja et al., "A Comparison of Application Sharing Mechanisms in Real-Time Desktop Conferencing Systems", At&T Bell Laboratories, 1990, pp. 238-248.
Aikawa et al., "Generation for Multilingual MT", available at <http://mtarchive.info/MTS-2001-Aikawa.pdf>, retrieved on Sep. 18, 2001, 6 pages.
Aikawa et al., "Speech Recognition Using Time-Warping Neural Networks", Proceedings of the 1991, IEEE Workshop on Neural Networks for Signal Processing, 1991, 10 pages.
Aikawa, K. "Time-Warping Neural Network for Phoneme Recognition", IEEE International Joint Conference on Neural Networks, vol. 3, Nov. 18-21, 1991, pp. 2122-2127.
Alfred App, "Alfred", available at <http://www.alfredapp.com/>, retrieved on Feb. 8, 2012, 5 pages.
All Music Website, available at <http://www.allmusic.com/>, retrieved on Mar. 19, 2007, 2 pages.
Allen et al., "Automated Natural Spoken Dialog", Computer, vol. 35, No. 4, Apr. 2002, pp. 51-56.
Allen, J., "Natural Language Understanding", 2nd Edition, The Benjamin/Cummings Publishing Company, Inc., 1995, 671 pages.
Alleva et al., "Applying SPHINX-II to DARPA Wall Street Journal CSR Task", Proceedings of Speech and Natural Language Workshop, Feb. 1992, pp. 393-398.
Alshawi et al., "CLARE: A Contextual Reasoning and Co-operative Response Framework for the Core Language Engine", SRI International, Cambridge Computer Science Research Centre, Cambridge, Dec. 1992, 273 pages.
Alshawi et al., "Declarative Derivation of Database Queries from Meaning Representations", Proceedings of the BANKAI Workshop on Intelligent Information Access, Oct. 1991, 12 pages.
Alshawi et al., "Logical Forms in the Core Language Engine", Proceedings of the 27th Annual Meeting of the Association for Computational Linguistics, 1989, pp. 25-32.
Alshawi et al., "Overview of the Core Language Engine", Proceedings of Future Generation Computing Systems,Tokyo, Sep. 1988, 13 pages.
Alshawi, H., "Translation and Monotonic Interpretation/Generation", SRI International, Cambridge Computer Science Research Centre, Cambridge, available at <http://www.cam.sri.com/tr/crc024/paper.ps.Z1992>, Jul. 1992, 18 pages.
Amano et al., "A User-friendly Multimedia Book Authoring System", The Institute of Electronics, information and Communication Engineers Technical Report, vol. 103, No. 416, Nov. 2003, pp. 33-40.
Amano, Junko, "A User-Friendly Authoring System for Digital Talking Books", IEICE Technical Report, The Institute of Electronics, Information and Communication Engineers, vol. 103 No. 418, Nov. 6, 2003, pp. 33-40.
Ambite et al., "Design and Implementation of the CALO Query Manager", American Association for Artificial Intelligence, 2006, 8 pages.
Ambite et al., "Integration of Heterogeneous Knowledge Sources in the CALO Query Manager", The 4th International Conference on Ontologies, Databases and Applications of Semantics (ODBASE), 2005, 18 pages.
Amrel Corporation, "Rocky Matrix BackLit Keyboard", available at <http://www.amrel.com/asi_matrixkeyboard.html>, retrieved on Dec. 19, 2002, 1 page.
Anastasakos et al., "Duration Modeling in Large Vocabulary Speech Recognition", International Conference on Acoustics, Speech and Signal Processing (ICASSP'95), May 1995, pp. 628-631.
Anderson et al, "Syntax-Directed Recognition of Hand-Printed Two-Dimensional Mathematics", Proceedings of Symposium on Interactive Systems for Experimental Applied Mathematics: Proceedings of the Association for Computing Machinery Inc. Symposium, 1967, 12 pages.
Anhui USTC IFL YTEK Co. Ltd., "Flytek Research Center Information Datasheet", available at <http://www.iflttek.com/english/Research.htm>, retrieved on Oct. 15, 2004, 3 pages.
Ansari et al., "Pitch Modification of Speech using a Low-Sensitivity Inverse Filter Approach", IEEE Signal Processing Letters, vol. 5, No. 3, Mar. 1998, pp. 60-62.
Anthony et al., "Supervised Adaption for Signature Verification System", IBM Technical Disclosure, Jun. 1, 1978, 3 pages.
API.AI, "Android App Review—Speaktoit Assistant", Available at <https://www.youtube.com/watch?v=myE498nyfGw>, Mar. 30, 2011, 3 pages.
Appelt et al., "Fastus: A Finite-State Processor for Information Extraction from Real-world Text", Proceedings of IJCAI, 1993, 8 pages.
Appelt et al., "SRI International Fastus System MUC-6 Test Results and Analysis", SRI International, Menlo Park, California, 1995, 12 pages.
Appelt et al., "SRI: Description of the JV-FASTUS System used for MUC-5", SRI International, Artificial Intelligence Center, 1993, 19 pages.
Apple Computer, "Guide Maker User's Guide", Apple Computer, Inc., Apr. 27, 1994, 8 pages.
Apple Computer, "Introduction to Apple Guide", Apple Computer, Inc., Apr. 28, 1994, 20 pages.
Apple Computer, "Knowledge Navigator", published by Apple Computer no later than 2008, as depicted in Exemplary Screenshots from video entitled 'Knowledge Navigator', 2008, 7 pages.
Apple Computer, Inc., "Apple—iPod—Technical Specifications, iPod 20GB and 60GB Mac + PC", available at <http://www.apple.com/ipod/color/specs.html>, 2005, 3 pages.
Apple Computer, Inc., "Apple Announces iTunes 2", Press Release, Oct. 23, 2001, 2 pages.
Apple Computer, Inc., "Apple Introduces iTunes—World's Best and Easiest to Use Jukebox Software", Macworld Expo, Jan. 9, 2001, 2 pages.
Apple Computer, Inc., "Apple's iPod Available in Stores Tomorrow", Press Release, Nov. 9, 2001, 1 page.
Apple Computer, Inc., "Inside Macintosh", vol. VI, 1985.
Apple Computer, Inc., "iTunes 2, Playlist Related Help Screens", iTunes v2.0, 2000-2001, 8 pages.
Apple Computer, Inc., "iTunes 2: Specification Sheet", 2001, 2 pages.
Apple Computer, Inc., "iTunes, Playlist Related Help Screens", iTunes v1.0, 2000-2001, 8 pages.
Apple Computer, Inc., "QuickTime Movie Playback Programming Guide", Aug. 11, 2005, pp. 1-58.
Apple Computer, Inc., "QuickTime Overview", Aug. 11, 2005, pp. 1-34.
Apple Computer, Inc., "Welcome to Tiger", available at <http://www.maths.dundee.ac.uk/software/Welcome_to_Mac_OS_X_v10.4_Tiger.pdf>, 2005, pp. 1-32.
Apple, "iPhone User's Guide", Available at <http://mesnotices.20minutes.fr/manuel-notice-mode-emploi/APPLE/IPHONE%2D%5FE#>, Retrieved on Mar. 27, 2008, Jun. 2007, 137 pages.
Apple, "VoiceOver", available at <http://www.apple.com/accessibility/voiceover/>, Feb. 2009, 5 pages.
Applebaum et al., "Enhancing the Discrimination of Speaker Independent Hidden Markov Models with Corrective Training", International Conference on Acoustics, Speech, and Signal Processing, May 23, 1989, pp. 302-305.
AppleEvent Manager, which is described in the publication Inside Macintosh vol. VI, available from Addison-Wesley Publishing Company, 1985.

(56) **References Cited**

OTHER PUBLICATIONS

Arango et al., "Touring Machine: A Software Platform for Distributed Multimedia Applications", 1992 IFIP International Conference on Upper Layer Protocols, Architectures, and Applications, May 1992, pp. 1-11.
Archbold et al., "A Team User's Guide", SRI International, Dec. 21, 1981, 70 pages.
Arons, Barry M., "The Audio-Graphical Interface to a Personal Integrated Telecommunications System", Thesis Submitted to the Department of Architecture at the Massachusetts Institute of Technology, Jun. 1984, 88 pages.
Asanovic et al., "Experimental Determination of Precision Requirements for Back-Propagation Training of Artificial Neural Networks", Proceedings of the 2nd International Conference of Microelectronics for Neural Networks, 1991, www.ICSI.Berkelev.EDU, 1991, 7 pages.
Atal et al., "Efficient Coding of LPC Parameters by Temporal Decomposition", IEEE International Conference on Acoustics, Speech and Signal Processing (ICASSP'83), Apr. 1983, 4 pages.
Badino et al. "Language Independent Phoneme Mapping for Foreign TTS", 5th ISCA Speech Synthesis Workshop, Pittsburgh, PA, Jun. 14-16, 2004, 2 pages.
Baechtle et al., "Adjustable Audio Indicator", IBM Technical Disclosure Bulletin, Jul. 1, 1984, 2 pages.
Baeza-Yates, Ricardo, "Visualization of Large Answers in Text Databases", AVI '96 Proceedings of the Workshop on Advanced Visual Interfaces, 1996, pp. 101-107.
Bahl et al., "A Maximum Likelihood Approach to Continuous Speech Recognition", IEEE Transaction on Pattern Analysis and Machine Intelligence, vol. PAMI-5, No. 2, Mar. 1983, 13 pages.
Bahl et al., "A Tree-Based Statistical Language Model for Natural Language Speech Recognition", IEEE Transactions on Acoustics, Speech and Signal Processing, vol. 37, No. 7, Jul. 1989, 8 pages.
Bahl et al., "Acoustic Markov Models Used in the Tangora Speech Recognition System", Proceeding of International Conference on Acoustics, Speech and Signal Processing (ICASSP'88), vol. 1, Apr. 1988, 4 pages.
Bahl et al., "Large Vocabulary Natural Language Continuous Speech Recognition", Proceedings of 1989 International Conference on Acoustics, Speech and Signal Processing, vol. 1, May 1989, 6 pages.
Bahl et al., "Multonic Markov Word Models for Large Vocabulary Continuous Speech Recognition", IEEE Transactions on Speech and Audio Processing, vol. 1, No. 3, Jul. 1993, 11 pages.
Bahl et al., "Recognition of a Continuously Read Natural Corpus", IEEE International Conference on Acoustics, Speech, and Signal Processing, vol. 3, Apr. 1978, pp. 422-424.
Bahl et al., "Speech Recognition with Continuous-Parameter Hidden Markov Models", Proceeding of International Conference on Acoustics, Speech and Signal Processing (ICASSP'88), vol. 1, Apr. 1988, 8 pages.
Bajarin, Tim, "With Low End Launched, Apple Turns to Portable Future", PC Week, vol. 7, Oct. 1990, p. 153(1).
Banbrook, M., "Nonlinear Analysis of Speech from a Synthesis Perspective", A Thesis Submitted for the Degree of Doctor of Philosophy, The University of Edinburgh, Oct. 15, 1996, 35 pages.
Barrett et al., "How to Personalize the Web", 1997 in proceddings of the ACM SIGCHI Conference on Human Factors in Computer Systems, Mar. 22-27, 1997, pp. 75-82.
Barthel, B., "Information Access for Visually Impaired Persons: Do We Still Keep a "Document" in "Documentation"?", Professional Communication Conference, Sep. 1995, pp. 62-66.
Baudel et al., "2 Techniques for Improved HC Interaction: Toolglass & Magic Lenses: The See-Through Interface", Apple Inc., Video Clip, CHI'94 Video Program on a CD, 1994.
Bear et al., "A System for Labeling Self-Repairs in Speech", SRI International, Feb. 22, 1993, 9 pages.
Bear et al., "Detection and Correction of Repairs in Human-Computer Dialog", SRI International, May 1992, 11 pages.
Bear et al., "Integrating Multiple Knowledge Sources for Detection and Correction of Repairs in Human-Computer Dialog", Proceedings of the 30th Annual Meeting on Association for Computational Linguistics (ACL), 1992, 8 pages.
Bear et al., "Using Information Extraction to Improve Document Retrieval", SRI International, Menlo Park, California, 1998, 11 pages.
Beck et al., "Integrating Natural Language, Query Processing, and Semantic Data Models", COMCON Spring '90. IEEE Computer Society International Conference, 1990, Feb. 26-Mar. 2, 1990, pp. 538-543.
Bederson et al., "Pad++: A Zooming Graphical Interface for Exploring Alternate Interface Physics", UIST' 94 Proceedings of the 7th Annual ACM symposium on User Interface Software and Technology, Nov. 1994, pp. 17-26.
Bederson et al., "The Craft of Information Visualization", Elsevier Science, Inc., 2003, 435 pages.
Belaid et al., "A Syntactic Approach for Handwritten Mathematical Formula Recognition", IEEE Transactions on Pattern Analysis and Machine Intelligence, vol. PAMI-6, No. 1, Jan. 1984, 7 pages.
Bellegarda et al., "A Latent Semantic Analysis Framework for Large-Span Language Modeling", 5th European Conference on Speech, Communication and Technology (EUROSPEECH'97), Sep. 1997, 4 pages.
Bellegarda et al., "A Multispan Language Modeling Framework for Large Vocabulary Speech Recognition", IEEE Transactions on Speech and Audio Processing, vol. 6, No. 5, Sep. 1998, 12 pages.
Bellegarda et al., "A Novel Word Clustering Algorithm Based on Latent Semantic Analysis", Proceedings of the IEEE International Conference on Acoustics, Speech and Signal Processing (ICASSP'96), vol. 1, 1996, 4 pages.
Bellegarda et al., "Experiments Using Data Augmentation for Speaker Adaptation", International Conference on Acoustics, Speech and Signal Processing (ICASSP'95), May 1995, 4 pages.
Bellegarda et al., "On-Line Handwriting Recognition using Statistical Mixtures", Advances in Handwriting and Drawings: A Multidisciplinary Approach, Europia, 6th International IGS Conference on Handwriting and Drawing, Paris, France, Jul. 1993, 11 pages.
Bellegarda et al., "Performance of the IBM Large Vocabulary Continuous Speech Recognition System on the ARPA Wall Street Journal Task", Signal Processing VII: Theories and Applications, European Association for Signal Processing, 1994, 4 pages.
Bellegarda et al., "The Metamorphic Algorithm: A Speaker Mapping Approach to Data Augmentation", IEEE Transactions on Speech and Audio Processing, vol. 2, No. 3, Jul. 1994, 8 pages.
Bellegarda et al., "Tied Mixture Continuous Parameter Modeling for Speech Recognition", IEEE Transactions on Acoustics, Speech and Signal Processing, vol. 38, No. 12, Dec. 1990, pp. 2033-2045.
Bellegarda, Jerome R. "Latent Semantic Mapping", IEEE Signal Processing Magazine, vol. 22, No. 5, Sep. 2005, pp. 70-80.
Bellegarda, Jerome R., "Exploiting both Local and Global Constraints for Multi-Span Statistical Language Modeling", Proceeding of the 1998 IEEE International Conference on Acoustics, Speech and Signal Processing (1CASSP'98), vol. 2, May 1998, 5 pages.
Bellegarda, Jerome R., "Exploiting Latent Semantic Information in Statistical Language Modeling", Proceedings of the IEEE, vol. 88, No. 8, Aug. 2000, 18 pages.
Bellegarda, Jerome R., "Interaction-Driven Speech Input—A Data-Driven Approach to the Capture of both Local and Global Language Constraints", available at <http://old.sig.chi.ora/bulletin/1998.2/bellegarda.html>, 1992, 7 pages.
Bellegarda, Jerome R., "Large Vocabulary Speech Recognition with Multispan Statistical Language Models", IEEE Transactions on Speech and Audio Processing, vol. 8, No. 1, Jan. 2000, 9 pages.
Belvin et al., "Development of the HRL Route Navigation Dialogue System", Proceedings of the First International Conference on Human Language Technology Research, Paper, 2001, 5 pages.
Benel et al., "Optimal Size and Spacing of Touchscreen Input Areas", Human-Computer Interaction—INTERACT, 1987, pp. 581-585.
Bergmann et al., "An adaptable man-machine interface using connected-word recognition", 2nd European Conference on Speech

(56) **References Cited**

OTHER PUBLICATIONS

Communication and Technology (Eurospeech 91), vol. 2, XP002176387, Sep. 24-26, 1991, pp. 467-470.
Beringer et al., "Operator Behavioral Biases Using High-Resolution Touch Input Devices", Proceedings of the Human Factors and Ergonomics Society 33rd Annual Meeting, 1989, 3 pages.
Beringer, Dennis B., "Target Size, Location, Sampling Point and Instruction Set: More Effects on Touch Panel Operation", Proceedings of the Human Factors and Ergonomics Society 34th Annual Meeting, 1990, 5 pages.
Bernabei et al., "Graphical I/O Devices for Medical Users", 14th Annual International Conference of the IEEE on Engineering in Medicine and Biology Society, vol. 3, 1992, pp. 834-836.
Bernstein, Macrophone, "Speech Corpus", IEEE/ICASSP, Apr. 22, 1994, pp. 1-81 to 1-84.
Berry et al., "PTIME: Personalized Assistance for Calendaring", ACM Transactions on Intelligent Systems and Technology, vol. 2, No. 4, Article 40, Jul. 2011, pp. 1-22.
Berry et al., "Symantec", New version of MORE.TM, Apr. 10, 1990, 1 page.
Berry et al., "Task Management under Change and Uncertainty Constraint Solving Experience with the CALO Project", Proceedings of CP'05 Workshop on Constraint Solving under Change, 2005, 5 pages.
Bertulucci, Jeff, "Google Adds Voice Search to Chrome Browser", PC World, Jun. 14, 2011.
Best Buy, "When it Comes to Selecting a Projection TV, Toshiba Makes Everything Perfectly Clear", Previews of New Releases, available at <http://www.bestbuy.com/HomeAudioVideo/Specials/ToshibaTVFeatures.asp>, retrieved on Jan. 23, 2003, 5 pages.
Betts et al., "Goals and Objectives for User Interface Software", Computer Graphics, vol. 21, No. 2, Apr. 1987, pp. 73-78.
Biemann et al., "Disentangling from Babylonian Confusion—Unsupervised Language Identification", CICLing'05 Proceedings of the 6th international conference on Computational Linguistics and Intelligent Text Processing, vol. 3406, Feb. 2005, pp. 773-784.
Biemann, Chris, "Unsupervised Part-of-Speech Tagging Employing Efficient Graph Clustering", Proceeding COLING ACL '06 Proceedings of the 21st International Conference on computational Linguistics and 44th Annual Meeting of the Association for Computational Linguistics: Student Research Workshop, 2006, pp. 7-12.
Bier et al., "Toolglass and Magic Lenses: The See-Through Interface", Computer Graphics (SIGGRAPH '93 Proceedings), vol. 27, 1993, pp. 73-80.
Birrell, Andrew, "Personal Jukebox (PJB)", available at <http://birrell.org/andrew/talks/pjb-overview.ppt>, Oct. 13, 2000, 6 pages.
Black et al., "Automatically Clustering Similar Units for Unit Selection in Speech Synthesis", Proceedings of Eurospeech, vol. 2, 1997, 4 pages.
Black et al., "Multilingual Text-to-Speech Synthesis", Acoustics, Speech and Signal Processing (ICASSP'04), Proceedings of the IEEE International Conference, vol. 3, May 17-21, 2004, pp. 761-764.
Blair et al., "An Evaluation of Retrieval Effectiveness for a Full-Text Document-Retrieval System", Communications of the ACM, vol. 28, No. 3, Mar. 1985, 11 pages.
Bleher et al., "A Graphic Interactive Application Monitor", IBM Systems Journal, vol. 19, No. 3, Sep. 1980, pp. 382-402.
BluePhoneElite: About, available at <http://www.reelintelligence.com/BluePhoneElite>, retrieved on Sep. 25, 2006, 2 pages.
BluePhoneElite: Features, available at <http://www.reelintelligence.com/BluePhoneElite/features.shtml,>, retrieved on Sep. 25, 2006, 2 pages.
Bluetooth PC Headsets, "'Connecting' Your Bluetooth Headset with Your Computer", Enjoy Wireless VoIP Conversations, available at <http://www.bluetoothpcheadsets.com/connect.htm>, retrieved on Apr. 29, 2006, 4 pages.
Bobrow et al., "Knowledge Representation for Syntactic/Semantic Processing", From: AAA-80 Proceedings, Copyright 1980, AAAI, 1980, 8 pages.
Bocchieri et al., "Use of Geographical Meta-Data in ASR Language and Acoustic Models", IEEE International Conference on Acoustics Speech and Signal Processing, 2010, pp. 5118-5121.
Bociurkiw, Michael, "Product Guide: Vanessa Matz", available at <http://www.forbes.com/asap/2000/1127/vmartz_print.html>, retrieved on Jan. 23, 2003, 2 pages.
Borden IV, G.R., "An Aural User Interface for Ubiquitous Computing", Proceedings of the 6th International Symposium on Wearable Computers, IEEE, 2002, 2 pages.
Borenstein, Nathaniel S., "Cooperative Work in the Andrew Message System", Information Technology Center and Computer Science Department, Carnegie Mellon University; Thyberg, Chris A. Academic Computing, Carnegie Mellon University, 1988, pp. 306-323.
Bouchou et al., "Using Transducers in Natural Language Database Query", Proceedings of 4th International Conference on Applications of Natural Language to Information Systems, Austria, Jun. 1999, 17 pages.
Boy, Guy A., "Intelligent Assistant Systems", Harcourt Brace Jovanovicy, 1991, 1 page.
Boyer et al., "A Fast String Searching Algorithm", Communications of the ACM, vol. 20, 1977, pp. 762-772.
Brain, Marshall, "How MP3 Files Work", available at <http://www.howstuffworks.com>, retrieved on Mar. 19, 2007, 4 pages.
Bratt et al., "The SRI Telephone-Based ATIS System", Proceedings of ARPA Workshop on Spoken Language Technology, 1995, 3 pages.
Briner, L. L., "Identifying Keywords in Text Data Processing", In Zelkowitz, Marvin V., ED, Directions and Challenges, 15th Annual Technical Symposium, Gaithersbury, Maryland, Jun. 17, 1976, 7 pages.
Brown et al., "Browing Graphs Using a Fisheye View", Apple Inc., Video Clip, Systems Research Center, CHI '92 Continued Proceedings on a CD, 1992.
Brown et al., "Browsing Graphs Using a Fisheye View", CHI '93 Proceedings of the INTERACT '93 and CHI '93 Conference on Human Factors in Computing Systems, 1993, p. 516.
Bulyko et al., "Error-Correction Detection and Response Generation in a Spoken Dialogue System", Speech Communication, vol. 45, 2005, pp. 271-288.
Bulyko et al., "Joint Prosody Prediction and Unit Selection for Concatenative Speech Synthesis", Electrical Engineering Department, University of Washington, Seattle, 2001, 4 pages.
Burger, D., "Improved Access to Computers for the Visually Handicapped: New Prospects and Principles", IEEE Transactions on Rehabilitation Engineering, vol. 2, No. 3, Sep. 1994, pp. 111-118.
Burke et al., "Question Answering from Frequently Asked Question Files", AI Magazine, vol. 18, No. 2, 1997, 10 pages.
Burns et al., "Development of a Web-Based Intelligent Agent for the Fashion Selection and Purchasing Process via Electronic Commerce", Proceedings of the Americas Conference on Information System (AMCIS), Dec. 31, 1998, 4 pages.
Busemann et al., "Natural Language Diaglogue Service for Appointment Scheduling Agents", Technical Report RR-97-02, Deutsches Forschungszentrum fur Kunstliche Intelligenz GmbH, 1997, 8 pages.
Bussey, et al., "Service Architecture, Prototype Description and Network Implications of a Personalized Information Grazing Service", INFOCOM'90, Ninth Annual Joint Conference of the IEEE Computer and Communication Societies, Available at <http://slrohall.com/oublications/>, Jun. 1990, 8 pages.
Bussler et al., "Web Service Execution Environment (WSMX)", retrieved from Internet on Sep. 17, 2012, available at <http://www.w3.org/Submission/WSMX>, Jun. 3, 2005, 29 pages.
Butcher, Mike, "EVI Arrives in Town to go Toe-to-Toe with Siri", TechCrunch, Jan. 23, 2012, 2 pages.
Butler, Travis, "Archos Jukebox 6000 Challenges Nomad Jukebox", available at <http://tidbits.com/article/6521>, Aug. 13, 2001, 5 pages.
Butler, Travis, "Portable MP3: The Nomad Jukebox", available at <http://tidbits.com/article/6261>, Jan. 8, 2001, 4 pages.

(56) **References Cited**

OTHER PUBLICATIONS

Buxton et al., "EuroPARC's Integrated Interactive Intermedia Facility (IIIF): Early Experiences", Proceedings of the IFIP WG 8.4 Conference on Multi-User Interfaces and Applications, 1990, pp. 11-34.
Buzo et al., "Speech Coding Based Upon Vector Quantization", IEEE Transactions on Acoustics, Speech and Signal Processing, vol. Assp-28, No. 5, Oct. 1980, 13 pages.
Call Centre, "Word Prediction", The CALL Centre & Scottish Executive Education Dept., 1999, pp. 63-73.
Caminero-Gil et al., "Data-Driven Discourse Modeling for Semantic Interpretation", Proceedings of the IEEE International Conference on Acoustics, Speech and Signal Processing, May 1996, 6 pages.
Campbell et al., "An Expandable Error-Protected 4800 BPS CELP Coder (U.S. Federal Standard 4800 BPS Voice Coder)", (Proceedings of IEEE Int'l Acoustics, Speech, and Signal Processing Conference, May 1983), as reprinted in Vector Quantization (IEEE Press, 1990), 1990, pp. 328-330.
Cao et al., "Adapting Ranking SVM to Document Retrieval", SIGIR '06, Seattle, WA, Aug. 6-11, 2006, 8 pages.
Car Working Group, "Hands-Free Profile 1.5 HFP1.5_SPEC", Bluetooth Doc, available at <www.bluetooth.org>, Nov. 25, 2005, 93 pages.
Caraballo et al., "Language Identification Based on a Discriminative Text Categorization Technique", Iberspeech 2012—VII Jornadas En Tecnologia Del Habla and Iii IberiansI Tech Workshop, Nov. 21, 2012, pp. 1-10.
Card et al., "Readings in Information Visualization Using Vision to Think", Interactive Technologies, 1999, 712 pages.
Carpendale et al., "3-Dimensional Pliable Surfaces: For the Effective Presentation of Visual Information", UIST '95 Proceedings of the 8th Annual ACM Symposium on User Interface and Software Technology, Nov. 14-17, 1995, pp. 217-226.
Carpendale et al., "Extending Distortion Viewing from 2D to 3D", IEEE Computer Graphics and Applications, Jul./Aug. 1997, pp. 42-51.
Carpendale et al., "Making Distortions Comprehensible", IEEE Proceedings of Symposium on Visual Languages, 1997, 10 pages.
Carter et al., "The Speech-Language Interface in the Spoken Language Translator", SRI International, Nov. 23, 1994, 9 pages.
Carter, D., "Lexical Acquisition in the Core Language Engine", Proceedings of the Fourth Conference of the European Chapter of the Association for Computational Linguistics, 1989, 8 pages.
Casner et al., "N-Way Conferencing with Packet Video", The Third International Workshop on Packet Video, Mar. 22-23, 1990, pp. 1-6.
Castleos, "Whole House Voice Control Demonstration", available online at : https://www.youtube.com/watch?v=9SRCoxrZ_W4, Jun. 2, 2012, 26 pages.
Cawley, Gavin C. "The Application of Neural Networks to Phonetic Modelling", PhD. Thesis, University of Essex, Mar. 1996, 13 pages.
Chai et al., "Comparative Evaluation of a Natural Language Dialog Based System and a Menu Driven System for Information Access: A Case Study", Proceedings of the International Conference on Multimedia Information Retrieval (RIAO), Paris, Apr. 2000, 11 pages.
Chakarova et al., "Digital Still Cameras—Downloading Images to a Computer", Multimedia Reporting and Convergence, available at <http://journalism.berkeley.edu/multimedia/tutorials/stillcams/downloading.html>, retrieved on May 9, 2005, 2 pages.
Chamberlain, Kim, "Quick Start Guide Natural Reader", available online at <http://atrc.colostate.edu/files/quickstarts/Natural_Reader_ Quick_Start_Guide.>, Apr. 2008, 5 pages.
Chang et al., "A Segment-Based Speech Recognition System for Isolated Mandarin Syllables", Proceedings TEN CON '93, IEEE Region 10 Conference on Computer, Communication, Control and Power Engineering, vol. 3, Oct. 1993, 6 pages.
Chang et al., "Discriminative Training of Dynamic Programming based Speech Recognizers", IEEE Transactions on Speech and Audio Processing, vol. 1, No. 2, Apr. 1993, pp. 135-143.
Chartier, David, "Using Multi-Network Meebo Chat Service on Your iPhone", available at <http://www.tuaw.com/2007/07/04/using-multi-network-meebo-chat-service-on-your-iphone/>, Jul. 4, 2007, 5 pages.
Chelba et al., "Structured Language Modeling for Speech Recognition", Available online at : http://arxiv.org/pdf/cs/0001023.pdf, Jan. 25, 2000, 7 pages.
Chen et al., "An Improved Method for Image Retrieval Using Speech Annotation", The 9th International Conference on Multi-Media Modeling, Jan. 2003, pp. 1-17.
Chen, Yi, "Multimedia Siri Finds and Plays Whatever You Ask for", PSFK Report, Feb. 9, 2012, 9 pages.
Cheyer et al., "Demonstration Video of Multimodal Maps Using an Agent Architecture", published by SRI International no later than 1996, as depicted in Exemplary Screenshots from video entitled Demonstration Video of Multimodal Maps Using an Agent Architecture, 1996, 6 pages.
Cheyer et al., "Demonstration Video of Multimodal Maps Using an Open-Agent Architecture", published by SRI International no later than 1996, as depicted in Exemplary Screenshots from video entitled Demonstration Video of Multimodal Maps Using an Open-Agent Architecture, 6 pages.
Cheyer et al., "Multimodal Maps: An Agent-Based Approach", International Conference on Co-operative Multimodal Communication, 1995, 15 pages.
Cheyer et al., "Spoken Language and Multimodal Applications for Electronic Realties", Virtual Reality, vol. 3, 1999, pp. 1-15.
Cheyer et al., "The Open Agent Architecture", Autonomous Agents and Multi-Agent Systems, vol. 4, Mar. 1, 2001, 6 pages.
Cheyer et al., "The Open Agent Architecture: Building Communities of Distributed Software Agents", Artificial Intelligence Center, SRI International, Power Point Presentation, Available online at <http://www.ai.sri.com/-oaa/>, retrieved on Feb. 21, 1998, 25 pages.
Cheyer, A., "Demonstration Video of Vanguard Mobile Portal", published by SRI International no later than 2004, as depicted in 'Exemplary Screenshots from video entitled Demonstration Video of Vanguard Mobile Portal', 2004, 10 pages.
Cheyer, Adam, "A Perspective on AI & Agent Technologies for SCM", VerticalNet Presentation, 2001, 22 pages.
Cheyer, Adam, "About Adam Cheyer", available at <http://www.adam.cheyer.com/about.html>, retrieved on Sep. 17, 2012, 2 pages.
Choi et al., "Acoustic and Visual Signal based Context Awareness System for Mobile Application", IEEE Transactions on Consumer Electronics, vol. 57, No. 2, May 2011, pp. 738-746.
Chomsky et al., "The Sound Pattern of English", New York, Harper and Row, 1968, 242 pages.
Choularton et al., "User Responses to Speech Recognition Errors: Consistency of Behaviour Across Domains", Proceedings of the 10th Australian International Conference on Speech Science & Technology, Dec. 8-10, 2004, pp. 457-462.
Church, Kenneth W., "Phonological Parsing in Speech Recognition", Kluwer Academic Publishers, 1987.
Cisco Systems, Inc., "Cisco Unity Unified Messaging User Guide", Release 4.0(5), Apr. 14, 2005, 152 pages.
Cisco Systems, Inc., "Installation Guide for Cisco Unity Unified Messaging with Microsoft Exchange 2003/2000 (With Failover Configured)", Release 4.0(5), Apr. 14, 2005, 152 pages.
Cisco Systems, Inc., "Operations Manager Tutorial, Cisco's IPC Management Solution", 2006, 256 pages.
Codd, E. F., "Databases: Improving Usability and Responsiveness—How About Recently", Copyright 1978, Academic Press, Inc., 1978, 28 pages.
Cohen et al., "An Open Agent Architecture", available at <http://citeseerx.ist.psu.edu/viewdoc/summary?doi=1 0.1.1.30.480>, 1994, 8 pages.
Cohen et al., "Voice User Interface Design,", Excerpts from Chapter 1 and Chapter 10, 2004, 36 pages.
Coleman, David W., "Meridian Mail Voice Mail System Integrates Voice Processing and Personal Computing", Speech Technology, vol. 4, No. 2, Mar./Apr. 1988, pp. 84-87.
Coles et al, "Chemistry Question-Answering", SRI International, Jun. 1969, 15 pages.

(56) **References Cited**

OTHER PUBLICATIONS

Coles et al., "Techniques for Information Retrieval Using an Inferential Question-Answering System with Natural-Language Input", SRI International, Nov. 1972, 198 Pages.
Coles et al., "The Application of Theorem Proving to Information Retrieval", SRI International, Jan. 1971, 21 pages.
Colt, Sam, "Here's One Way Apple's Smartwatch Could Be Better Than Anything Else", Business Insider, Aug. 21, 2014, pp. 1-4.
Combined Search Report and Examination Report under Sections 17 and 18(3) received for GB Patent Application No. 1009318.5, dated Oct. 8, 2010, 5 pages.
Combined Search Report and Examination Report under Sections 17 and 18(3) received for GB Patent Application No. 1217449.6, dated Jan. 17, 2013, 6 pages.
Compaq Inspiration Technology, "Personal Jukebox (PJB)—Systems Research Center and PAAD", Oct. 13, 2000, 25 pages.
Compaq, "Personal Jukebox", available at <http://research.compaq.com/SRC/pjb/>, 2001, 3 pages.
Conkie et al., "Preselection of Candidate Units in a Unit Selection-Based Text-to-Speech Synthesis System", ISCA, 2000, 4 pages.
Conklin, Jeff, "Hypertext: An Introduction and Survey", Computer Magazine, Sep. 1987, 25 pages.
Conklin, Jeffrey, "A Survey of Hypertext", MCC Software Technology Program, Dec. 1987, 40 pages.
Connolly et al., "Fast Algorithms for Complex Matrix Multiplication Using Surrogates", IEEE Transactions on Acoustics, Speech and Signal Processing, vol. 37, No. 6, Jun. 1989, 13 pages.
Constantinides et al., "A Schema Based Approach to Dialog Control", Proceedings of the International Conference on Spoken Language Processing, 1998, 4 pages.
Copperi et al., "CELP Coding for High Quality Speech at 8 kbits/s", Proceedings of IEEE International Acoustics, Speech and Signal Processing Conference, Apr. 1986), as reprinted in Vector Quantization (IEEE Press), 1990, pp. 324-327.
Corporate Ladder, BLOC Publishing Corporation, 1991, 1 page.
Corr, Paul, "Macintosh Utilities for Special Needs Users", available at <http://homepage.mac.com/corrp/macsupt/columns/specneeds.html>, Feb. 1994 (content updated Sep. 19, 1999), 4 pages.
Cox et al., "Speech and Language Processing for Next-Millennium Communications Services", Proceedings of the IEEE, vol. 88, No. 8, Aug. 2000, 24 pages.
Craig et al., "Deacon: Direct English Access and Control", AFIPS Conference Proceedings, vol. 19, San Francisco, Nov. 1966, 18 pages.
Creative Technology Ltd., "Creative NOMAD® II: Getting Started—User Guide (on Line Version)", available at <http://ec1.images-amazon.com/media/i3d/01/A/man-migrate/MANUAL000026434.pdf>, Apr. 2000, 46 pages.
Creative Technology Ltd., "Creative NOMAD®: Digital Audio Player: User Guide (On-Line Version)", available at <http://ec1.images-amazon.com/media/i3d/01/A/man-migrate/MANUAL000010757.pdf>, Jun. 1999, 40 pages.
Creative Technology Ltd., "Nomad Jukebox", User Guide, Version 1.0, Aug. 2000, 52 pages.
Creative, "Creative NOMAD MuVo TX", available at <http://web.archive,org/web/20041024175952/www.creative.com/products/pfriendly.asp?product=9672>, retrieved on Jun. 6, 2006, 1 page.
Creative, "Creative NOMAD MuVo", available at <http://web.archive.org/web/20041024075901/www.creative.com/products/product.asp?category=213&subcategory=216&product=4983>, retrieved on Jun. 7, 2006, 1 page.
Creative, "Digital MP3 Player", available at <http://web.archive.org/web/20041024074823/www.creative.com/products/product.asp?category=213&subcategory=216&product=4983, 2004, 1 page.
Croft et al., "Task Support in an Office System", Proceedings of the Second ACM-SIGOA Conference on Office Information Systems, 1984, pp. 22-24.
Crowley et al., "MMConf: An Infrastructure for Building Shared Multimedia Applications", CSCW 90 Proceedings, Oct. 1990, pp. 329-342.
Cucerzan et al., "Bootstrapping a Multilingual Part-of-Speech Tagger in One Person-Day", In Proceedings of the 6th Conference on Natural Language Learning, vol. 20, 2002, pp. 1-7.
Cuperman et al., "Vector Predictive Coding of Speech at 16 kbit s/s", (IEEE Transactions on Communications, Jul. 1985), as reprinted in Vector Quantization (IEEE Press, 1990), 1990, pp. 300-311.
Cutkosky et al., "PACT: An Experiment in Integrating Concurrent Engineering Systems", Journal & Magazines, Computer, vol. 26, No. 1, Jan. 1993, 14 pages.
Dar et al., "DTL's DataSpot: Database Exploration Using Plain Language", Proceedings of the 24th VLDB Conference, New York, 1998, 5 pages.
Database WPI Section Ch, Week 8733, Derwent Publications Ltd., London, GB; Class A17, AN 87-230826 & JP, A, 62 153 326 (Sanwa Kako KK (SANS) Sanwa Kako CO), Jul. 8, 1987.
Database WPI Section Ch, Week 8947, Derwent Publications Ltd., London, GB; Class A17, AN 89-343299 & JP, A, 1 254 742 (Sekisui Plastics KK), Oct. 11, 1989.
Davis et al., "A Personal Handheld Multi-Modal Shopping Assistant", International Conference on Networking and Services, IEEE, 2006, 9 pages.
Davis et al., "Stone Soup Translation", Department of Linguistics, Ohio State University, 2001, 11 pages.
De Herrera, Chris, "Microsoft ActiveSync 3.1", Version 1.02, available at <http://www.cewindows.net/wce/activesync3.1.htm>, Oct. 13, 2000, 8 pages.
Decker et al., "Designing Behaviors for Information Agents", The Robotics Institute, Carnegie-Mellon University, Paper, Jul. 1996, 15 pages.
Decker et al., "Matchmaking and Brokering", The Robotics Institute, Carnegie-Mellon University, Paper, May 1996, 19 pages.
Deerwester et al., "Indexing by Latent Semantic Analysis", Journal of the American Society for Information Science, vol. 41, No. 6, Sep. 1990, 19 pages.
Degani et al., "'Soft' Controls for Hard Displays: Still a Challenge", Proceedings of the 36th Annual Meeting of the Human Factors Society, 1992, pp. 52-56.
Del Strother, Jonathan, "Coverflow", available at <http://www.steelskies.com/coverflow>, retrieved on Jun. 15, 2006, 14 pages.
Deller, Jr. et al., "Discrete-Time Processing of Speech Signals", Prentice Hall, ISBN: 0-02-328301-7, 1987, 14 pages.
Diagrammaker, Action Software, 1989.
Diagram-Master, Ashton-Tate, 1989.
Diamond Multimedia Systems, Inc., "Rio PMP300: User's Guide", available at <http://ec1.images-amazon.com/media/i3d/01/A/man-migrate/MANUAL000022854.pdf>, 1998, 28 pages.
Dickinson et al., "Palmtips: Tiny Containers for All Your Data", PC Magazine, vol. 9, Mar. 1990, p. 218(3).
Digital Audio in the New Era, Electronic Design and Application, No. 6, Jun. 30, 2003, 3 pages.
Digital Equipment Corporation, "Open VMS Software Overview", Software Manual, Dec. 1995, 159 pages.
Digital Equipment Corporation, "OpenVMS RTL DECtalk (DTK$) Manual", May 1993, 56 pages.
Dittenbach et al., "A Natural Language Query Interface for Tourism Information", In: Information and Communication Technologies in Tourism 2003, XP055114393, Feb. 14, 2003, pp. 152-162.
Dobrisek et al., "Evolution of the Information-Retrieval System for Blind and Visually-Impaired People", International Journal of Speech Technology, Kluwer Academic Publishers, Bo, vol. 6, No. 3, pp. 301-309.
Domingue et al., "Web Service Modeling Ontology (WSMO)—An Ontology for Semantic Web Services", Position Paper at the W3C Workshop on Frameworks for Semantics in Web Services, Innsbruck, Austria, Jun. 2005, 6 pages.
Donahue et al., "Whiteboards: A Graphical Database Tool", ACM Transactions on Office Information Systems, vol. 4, No. 1, Jan. 1986, pp. 24-41.

(56) **References Cited**

OTHER PUBLICATIONS

Donovan, R. E., "A New Distance Measure for Costing Spectral Discontinuities in Concatenative Speech Synthesisers", available at <http://citeseerx.ist.osu.edu/viewdoc/summarv?doi=1 0.1.1.21. 6398>, 2001, 4 pages.
Dourish et al., "Portholes: Supporting Awareness in a Distributed Work Group", CHI 1992;, May 1992, pp. 541-547.
Dowding et al., "Gemini: A Natural Language System for Spoken-Language Understanding", Proceedings of the Thirty-First Annual Meeting of the Association for Computational Linguistics, 1993, 8 pages.
Dowding et al., "Interleaving Syntax and Semantics in an Efficient Bottom-Up Parser", Proceedings of the 32nd Annual Meeting of the Association for Computational Linguistics, 1994, 7 pages.
Dragon Naturally Speaking Version 11 Users Guide, Nuance Communications, Inc., Copyright @2002-2010, 132 pages.
Dual Rate Speech Coder for Multimedia Communications Transmitting at 5.3 and 6.3 kbit/s, International Telecommunication Union Recommendation G.723, 7 pages.
Dusan et al., "Multimodal Interaction on PDA's Integrating Speech and Pen Inputs", Eurospeech Geneva, 2003, 4 pages.
Dyslexic.com, "AlphaSmart 3000 with CoWriter SmartApplet: Don Johnston Special Needs", available at <http://www.dyslexic.com/procuts.php?catid-2&pid=465&PHPSESSID=2511b800000f7da>, retrieved on Dec. 6, 2005, 13 pages.
Eagle et al., "Social Serendipity: Proximity Sensing and Cueing", MIT Media Laboratory Technical Note 580, May 2004, 18 pages.
Edwards, John R., "Q&A: Integrated Software with Macros and an Intelligent Assistant", Byte Magazine, vol. 11, No. 1, Jan. 1986, pp. 120-122.
Egido, Carmen, "Video Conferencing as a Technology to Support Group Work: A Review of its Failures", Bell Communications Research, 1988, pp. 13-24.
Elio et al., "On Abstract Task Models and Conversation Policies", Proc. Workshop on Specifying and Implementing Conversation Policies, Autonomous Agents'99 Conference, 1999, pp. 1-10.
Elliot, Chip, "High-Quality Multimedia Conferencing Through a Long-Haul Packet Network", BBN Systems and Technologies, 1993, pp. 91-98.
Elliott et al., "Annotation Suggestion and Search for Personal Multimedia Objects on the Web", CIVR, Jul. 7-9, 2008, pp. 75-84.
Elofson et al., "Delegation Technologies: Environmental Scanning with Intelligent Agents", Jour. of Management Info. Systems, Summer 1991, vol. 8, No. 1, 1991, pp. 37-62.
Eluminx, "Illuminated Keyboard", available at <http://www.elumix.com/>, retrieved on Dec. 19, 2002, 1 page.
Engst, Adam C., "SoundJam Keeps on Jammin", available at <http://db.tidbits.com/getbits.acgi?tbart=05988>, Jun. 19, 2000, 3 pages.
Epstein et al., "Natural Language Access to a Melanoma Data Base", SRI International, Sep. 1978, 7 pages.
Ericsson et al., "Software Illustrating a Unified Approach to Multimodality and Multilinguality in the In-Home Domain", Talk and Look: Tools for Ambient Linguistic Knowledge, Dec. 2006, 127 pages.
Ericsson Inc., "Cellular Phone with Integrated MP3 Player", Research Disclosure Journal No. 41815, Feb. 1999, 2 pages.
Erol et al., "Multimedia Clip Generation From Documents for Browsing on Mobile Devices", IEEE Transactions on Multimedia, vol. 10, No. 5, Aug. 2008, 13 pages.
Eslambolchilar et al., "Making Sense of Fisheye Views", Second Dynamics and Interaction Workshop at University of Glasgow, Aug. 2005, 6 pages.
Eslambolchilar et al., "Multimodal Feedback for Tilt Controlled Speed Dependent Automatic Zooming", UIST'04, Oct. 24-27, 2004, 2 pages.
European Search Report received for European Patent Application No. 01201774.5, dated Sep. 14, 2001, 3 pages.
European Search Report received for European Patent Application No. 99107544.1, dated Jul. 8, 1999, 4 pages.
European Search Report received for European Patent Application No. 99107545.8, dated Jul. 1, 1999, 3 pages.
Evermann et al., "Posterior Probability Decoding, Confidence Estimation and System Combination", Proceedings Speech Transcription Workshop, 2000, 4 pages.
Evi, "Meet Evi: The One Mobile Application that Provides Solutions for your Everyday Problems", Feb. 2012, 3 pages.
Exhibit 1, "Natural Language Interface Using Constrained Intermediate Dictionary of Results", List of Publications Manually Reviewed for the Search of U.S. Pat. No. 7,177,798, Mar. 22, 2013, 1 page.
Extended European Search Report (includes European Search Report and European Search Opinion) received for European Patent Application No. 06256215.2, dated Feb. 20, 2007, 6 pages.
Extended European Search Report (includes European Search Report and European Search Opinion) received for European Patent Application No. 12186113.2, dated Apr. 28, 2014, 14 pages.
Extended European Search Report (includes Partial European Search Report and European Search Opinion) received for European Patent Application No. 13169672.6, dated Aug. 14, 2013, 11 pages.
Extended European Search Report (includes Partial European Search Report and European Search Opinion) received for European Patent Application No. 15169349.6, dated Jul. 28, 2015, 8 pages.
Extended European Search Report (includes Partial European Search Report and European Search Opinion) received for European Patent Application No. 15196748.6, dated Apr. 4, 2016.
Extended European Search Report (includes Partial European Search Report and European Search Opinion) received for European Patent Application No. 16150079.8, dated Feb. 18, 2016, 7 pages.
Extended European Search Report (includes Supplementary European Search Report and Search Opinion) received for European Patent Application No. 07863218.9, dated Dec. 9, 2010, 7 pages.
Extended European Search Report (includes Supplementary European Search Report and Search Opinion) received for European Patent Application No. 12727027.0, dated Sep. 26, 2014, 7 pages.
Extended European Search Report (inclusive of the Partial European Search Report and European Search Opinion) received for European Patent Application No. 12729332.2, dated Oct. 31, 2014, 6 pages.
Extended European Search Report and Search Opinion received for European Patent Application No. 12185276.8, dated Dec. 18, 2012, 4 pages.
Extended European Search Report received for European Patent Application No. 11159884.3, dated May 20, 2011, 8 pages.
Extended European Search Report received for European Patent Application No. 12186663.6, dated Jul. 16, 2013, 6 pages.
Extended European Search Report received for European Patent Application No. 13726938.7, dated Dec. 14, 2015, 8 pages.
Extended European Search Report received for European Patent Application No. 13770552.1, dated Jan. 7, 2016, 5 pages.
Extended European Search Report received for European Patent Application No. 14737370.8, dated May 19, 2016, 12 pages.
Fanty et al., "A Comparison of DFT, PLP and Cochleagram for Alphabet Recognition", IEEE, Nov. 1991.
Feigenbaum et al., "Computer-Assisted Semantic Annotation of Scientific Life Works", Oct. 15, 2007, 22 pages.
Ferguson et al., "TRIPS: An Integrated Intelligent Problem-Solving Assistant", Proceedings of the Fifteenth National Conference on Artificial Intelligence (AAAI-98) and Tenth Conference on Innovative Applications of Artificial Intelligence (IAAI-98), 1998, 7 pages.
Fikes et al., "A Network-Based Knowledge Representation and its Natural Deduction System", SRI International, Jul. 1977, 43 pages.
Findlater et al., "Beyond QWERTY: Augmenting Touch-Screen Keyboards with Multi-Touch Gestures for Non-Alphanumeric Input", CHI '12, Austin, Texas, USA, May 5-10, 2012, 4 pages.
Fiscus, J. G., "A Post-Processing System to Yield Reduced Word Error Rates: Recognizer Output Voting Error Reduction (ROVER)", IEEE Proceedings, Automatic Speech Recognition and Understanding, Dec. 14-17, 1997, pp. 347-354.

(56) **References Cited**

OTHER PUBLICATIONS

Fisher et al., "Virtual Environment Display System", Interactive 3D Graphics, Oct. 23-24, 1986, pp. 77-87.
Forsdick, Harry, "Explorations into Real-Time Multimedia Conferencing", Proceedings of the Ifip Tc 6 International Symposium on Computer Message Systems, 1986, 331 pages.
Frisse, M. E., "Searching for Information in a Hypertext Medical Handbook", Communications of the ACM, vol. 31, No. 7, Jul. 1988, 8 pages.
Furnas et al., "Space-Scale Diagrams: Understanding Multiscale Interfaces", CHI '95 Proceedings of the SIGCHI Conference on Human Factors in Computing Systems, 1995, pp. 234-241.
Furnas, George W., "Effective View Navigation", Proceedings of the ACM SIGCHI Conference on Human Factors in Computing Systems, Mar. 1997, pp. 367-374.
Furnas, George W., "Generalized Fisheye Views", CHI '86 Proceedings of the SIGCHI Conference on Human Factors in Computing Systems, vol. 17, No. 4, Apr. 1986, pp. 16-23.
Furnas, George W., "The Fisheye Calendar System", Bellcore Technical Memorandum, Nov. 19, 1991.
Gamback et al., "The Swedish Core Language Engine", NOTEX Conference, 1992, 17 pages.
Gannes, Liz, "Alfred App Gives Personalized Restaurant Recommendations", AllThingsD, Jul. 18, 2011, pp. 1-3.
Gardner, Jr., P. C., "A System for the Automated Office Environment", IBM Systems Journal, vol. 20, No. 3, 1981, pp. 321-345.
Garretson, R., "IBM Adds 'Drawing Assistant' Design Tool to Graphic Series", PC Week, vol. 2, No. 32, Aug. 13, 1985, 1 page.
Gautier et al., "Generating Explanations of Device Behavior Using Compositional Modeling and Causal Ordering", CiteSeerx, 1993, pp. 89-97.
Gaver et al., "One Is Not Enough: Multiple Views in a Media Space", INTERCHI, Apr. 24-29, 1993, pp. 335-341.
Gaver et al., "Realizing a Video Environment: EuroPARC's RAVE System", Rank Xerox Cambridge EuroPARC, 1992, pp. 27-35.
Gervasio et al., "Active Preference Learning for Personalized Calendar Scheduling Assistance", CiteSeerx, Proceedings of IUI'05, Jan. 2005, pp. 90-97.
Giachin et al., "Word Juncture Modeling Using Inter-Word Context-Dependent Phone-Like Units", Cselt Technical Reports, vol. 20, No. 1, Mar. 1992, pp. 43-47.
Gillespie, Kelly, "Adventures in Integration", Data Based Advisor, vol. 9, No. 9, Sep. 1991, pp. 90-92.
Gillespie, Kelly, "Internationalize Your Applications with Unicode", Data Based Advisor, vol. 10, No. 10, Oct. 1992, pp. 136-137.
Gilloire et al., "Innovative Speech Processing for Mobile Terminals: An Annotated Bibliography", Signal Processing, vol. 80, No. 7, Jul. 2000, pp. 1149-1166.
Glass et al., "Multilingual Language Generation Across Multiple Domains", International Conference on Spoken Language Processing, Japan, Sep. 1994, 5 pages.
Glass et al., "Multilingual Spoken-Language Understanding in the Mit Voyager System", Available online at <http://groups.csail.mit.edu/sls/publications/1995/speechcomm95-voyager.pdf>, Aug. 1995, 29 pages.
Glass, Alyssa, "Explaining Preference Learning", CiteSeerx, 2006, pp. 1-5.
Glinert-Stevens, Susan, "Microsoft Publisher: Desktop Wizardry", PC Sources, vol. 3, No. 2, Feb. 1992, 1 page.
Glossary of Adaptive Technologies: Word Prediction, available at <http://www.utoronto.ca/atrc/reference/techwordpred.html>, retrieved on Dec. 6, 2005, 5 pages.
Gmail, "About Group Chat", available at <http://mail.google.com/support/bin/answer.py?answer=81090>, Nov. 26, 2007, 2 pages.
Goddeau et al., "A Form-Based Dialogue Manager for Spoken Language Applications", Available online at <http://phasedance.com/pdflicslp96.pdf>, Oct. 1996, 4 pages.
Goddeau et al., "Galaxy: A Human-Language Interface to On-Line Travel Information", International Conference on Spoken Language Processing, Yokohama, 1994, pp. 707-710.
Goldberg et al., "Using Collaborative Filtering to Weave an Information Tapestry", Communications of the ACM, vol. 35, No. 12, Dec. 1992, 10 pages.
Goldberg, Cheryl, "IBM Drawing Assistant: Graphics for the EGA", PC Magazine, vol. 4, No. 26, Dec. 24, 1985, 1 page.
Gong et al., "Guidelines for Handheld Mobile Device Interface Design", Proceedings of DSI 2004 Annual Meeting, 2004, pp. 3751-3756.
Gonnet et al., "Handbook of Algorithms and Data Structures: in Pascal and C. (2nd ed.)", Addison-Wesley Longman Publishing Co., 1991, 17 pages.
Good et al., "Building a User-Derived Interface", Communications of the ACM; (Oct. 1984) vol. 27, No. 10, Oct. 1984, pp. 1032-1043.
Gorin et al., "On Adaptive Acquisition of Language", International Conference on Acoustics, Speech and Signal Processing (ICASSP'90), vol. 1, Apr. 1990, 5 pages.
Gotoh et al., "Document Space Models Using Latent Semantic Analysis", In Proceedings of Eurospeech, 1997, 4 pages.
Gray et al., "Rate Distortion Speech Coding with a Minimum Discrimination Information Distortion Measure", (IEEE Transactions on Information Theory, Nov. 1981), as reprinted in Vector Quantization (IEEE Press), 1990, pp. 208-221.
Gray, R. M., "Vector Quantization", IEEE ASSP Magazine, Apr. 1984, 26 pages.
Green, C., "The Application of Theorem Proving to Question-Answering Systems", SRI Stanford Research Institute, Artificial Intelligence Group, Jun. 1969, 169 pages.
Greenberg, Saul, "A Fisheye Text Editor for Relaxed-WYSIWIS Groupware", CHI '96 Companion, Vancouver, Canada, Apr. 13-18, 1996, 2 pages.
Gregg et al., "DSS Access on the WWW: An Intelligent Agent Prototype", Proceedings of the Americas Conference on Information Systems, Association for Information Systems, 1998, 3 pages.
Griffin et al., "Signal Estimation From Modified Short-Time Fourier Transform", IEEE Transactions on Acoustics, Speech and Signal Processing, vol. ASSP-32, No. 2, Apr. 1984, pp. 236-243.
Grishman et al., "Computational Linguistics: An Introduction", Cambridge University Press, 1986, 172 pages.
Grosz et al., "Dialogic: A Core Natural-Language Processing System", SRI International, Nov. 1982, 17 pages.
Grosz et al., "Research on Natural-Language Processing at SRI", SRI International, Nov. 1981, 21 pages.
Grosz et al., "Team: An Experiment in the Design of Transportable Natural-Language Interfaces", Artificial Intelligence, vol. 32, 1987, 71 pages.
Grosz, B., "Team: A Transportable Natural-Language Interface System", Proceedings of the First Conference on Applied Natural Language Processing, 1983, 7 pages.
Gruber et al., "An Ontology for Engineering Mathematics", Fourth International Conference on Principles of Knowledge Representation and Reasoning, Available online at <http://www-ksl.stanford.edu/knowledge-sharing/papers/engmath.html>, 1994, pp. 1-22.
Gruber et al., "Generative Design Rationale: Beyond the Record and Replay Paradigm", Knowledge Systems Laboratory, Technical Report KSL 92-59, Dec. 1991, Updated Feb. 1993, 24 pages.
Gruber et al., "Machine-Generated Explanations of Engineering Models: A Compositional Modeling Approach", Proceedings of International Joint Conference on Artificial Intelligence, 1993, 7 pages.
Gruber et al., "NIKE: A National Infrastructure for Knowledge Exchange", A Whitepaper Advocating and ATP Initiative on Technologies for Lifelong Learning, Oct. 1994, pp. 1-10.
Gruber et al., "Toward a Knowledge Medium for Collaborative Product Development", Proceedings of the Second International Conference on Artificial Intelligence in Design, Jun. 1992, pp. 1-19.
Gruber, Thomas R., "A Translation Approach to Portable Ontology Specifications", Knowledge Acquisition, vol. 5, No. 2, Jun. 1993, pp. 199-220.
Gruber, Thomas R., "Automated Knowledge Acquisition for Strategic Knowledge", Machine Learning, vol. 4, 1989, pp. 293-336.

(56) **References Cited**

OTHER PUBLICATIONS

Gruber, Thomas R., "Interactive Acquisition of Justifications: Learning "Why" by Being Told "What"", Knowledge Systems Laboratory, Technical Report KSL 91-17, Original Oct. 1990, Revised Feb. 1991, 24 pages.
Gruber, Thomas R., "Toward Principles for the Design of Ontologies used for Knowledge Sharing", International Journal of Human-Computer Studies, vol. 43, No. 5-6, Nov. 1995, pp. 907-928.
Gruber, Thomas R., et al., U.S. Appl. No. 61/186,414, filed Jun. 12, 2009 titled "System and Method for Semantic Auto-Completion" 13 pages.
Gruber, Thomas R., et al., U.S. Appl. No. 61/493,201, filed Jun. 3, 2011 titled "Generating and Processing Data Items That Represent Tasks to Perform", 68 pages.
Gruber, Thomas R., et al., U.S. Appl. No. 61/657,744, filed Jun. 9, 2012 titled "Automatically Adapting User Interfaces for Hands-Free Interaction", 40 pages.
Gruber, Thomas R., et al., U.S. Appl. No. 07/976,970, filed Nov. 16, 1992 titled "Status Bar for Application Windows".
Gruber, Tom, "(Avoiding) the Travesty of the Commons", Presentation at NPUC, New Paradigms for User Computing, IBM Almaden Research Center, Jul. 24, 2006, 52 pages.
Gruber, Tom, "2021: Mass Collaboration and the Really New Economy", TNTY Futures, vol. 1, No. 6, Available online at <http://tomgruber.org/writing/tnty2001.htm>, Aug. 2001, 5 pages.
Gruber, Tom, "Big Think Small Screen: How Semantic Computing in the Cloud will Revolutionize the Consumer Experience on the Phone", Keynote Presentation at Web 3.0 Conference, Jan. 2010, 41 pages.
Gruber, Tom, "Collaborating Around Shared Content on the WWW, W3C Workshop on WWW and Collaboration", available at <http://www.w3.org/Collaboration/Workshop/Proceedings/P9.html>, Sep. 1995, 1 page.
Gruber, Tom, "Collective Knowledge Systems: Where the Social Web Meets the Semantic Web", Web Semantics: Science, Services and Agents on the World Wide Web; 2007, pp. 1-19.
Gruber, Tom, "Despite Our Best Efforts, Ontologies are not the Problem", AAAI Spring Symposium, Available online at <http://tomgruber.org/writing/aaai-ss08.htm>, Mar. 2008, pp. 1-40.
Gruber, Tom, "Enterprise Collaboration Management with Intraspect", Intraspect Technical White Paper, Jul. 2001, pp. 1-24.
Gruber, Tom, "Every Ontology is a Treaty—A Social Agreement—Among People with Some Common Motive in Sharing", Official Quarterly Bulletin of AIS Special Interest Group on Semantic Web and Information Systems, vol. 1, No. 3, 2004, pp. 1-5.
Gruber, Tom, "Helping Organizations Collaborate, Communicate, and Learn", Presentation to NASA Ames Research, Available online at <http://tomgruber.org/writing/organizational-intelligence-talk.htm>, Mar.-Oct. 2003, 30 pages.
Gruber, Tom, "Intelligence at the Interface: Semantic Technology and the Consumer Internet Experience", Presentation at Semantic Technologies Conference, Available online at <http://tomgruber.org/writing/semtech08.htm>, May 20, 2008, pp. 1-40.
Gruber, Tom, "It Is What It Does: The Pragmatics of Ontology for Knowledge Sharing", Proceedings of the International CIDOC CRM Symposium, Available online at <http://tomgruber.org/writing/cidoc-ontology.htm>, Mar. 26, 2003, 21 pages.
Gruber, Tom, "Ontologies, Web 2.0 and Beyond", Ontology Summit, Available online at <http://tomgruber.org/writing/ontolog-social-web-keynote.htm>, Apr. 2007, 17 pages.
Gruber, Tom, "Ontology of Folksonomy: A Mash-Up of Apples and Oranges", Int'l Journal on Semantic Web & Information Systems, vol. 3, No. 2, 2007, 7 pages.
Gruber, Tom, "Siri, A Virtual Personal Assistant—Bringing Intelligence to the Interface", Semantic Technologies Conference, Jun. 16, 2009, 21 pages.
Gruber, Tom, "TagOntology", Presentation to Tag Camp, Oct. 29, 2005, 20 pages.
Gruber, Tom, "Where the Social Web Meets the Semantic Web", Presentation at the 5th International Semantic Web Conference, Nov. 2006, 38 pages.
Gruhn et al., "A Research Perspective on Computer-Assisted Office Work", IBM Systems Journal, vol. 18, No. 3, 1979, pp. 432-456.
Guay, Matthew, "Location-Driven Productivity with Task Ave", available at <http://iphone.appstorm.net/reviews/productivity/location-driven-productivity-with-task-ave/>, Feb. 19, 2011, 7 pages.
Guida et al., "NLI: A Robust Interface for Natural Language Person-Machine Communication", International Journal of Man-Machine Studies, vol. 17, 1982, 17 pages.
Guim, Mark, "How to Set a Person-Based Reminder with Cortana", available at <http://www.wpcentral.com/how-to-person-based-reminder-cortana>, Apr. 26, 2014, 15 pages.
Gurevych et al., "Semantic Coherence Scoring Using an Ontology", North American Chapter of the Association for Computational Linguistics Archive, Proceedings of the 2003 Conference of the North American Chapter of the Association for Computational Linguistics on Human Language Technology, May 27, 2003, 8 pages.
Guzzoni et al., "A Unified Platform for Building Intelligent Web Interaction Assistants", Proceedings of the 2006 IEEE/WIC/ACM International Conference on Web Intelligence and Intelligent Agent Technology, Computer Society, 2006, 4 pages.
Guzzoni et al., "Active, A Platform for Building Intelligent Operating Rooms", Surgetica 2007 Computer-Aided Medical Interventions: Tools and Applications, 2007, pp. 191-198.
Guzzoni et al., "Active, A platform for Building Intelligent Software", Computational Intelligence, available at <http://www.informatik.uni-trier.del-ley/pers/hd/g/Guzzoni:Didier >, 2006, 5 pages.
Guzzoni et al., "Active, A Tool for Building Intelligent User Interfaces", ASC 2007, Palma de Mallorca, Aug. 2007, 6 pages.
Guzzoni et al., "Many Robots Make Short Work", AAAI Robot Contest, SRI International, 1996, 9 pages.
Guzzoni et al., "Modeling Human-Agent Interaction with Active Ontologies", AAAI Spring Symposium, Interaction Challenges for Intelligent Assistants, Stanford University, Palo Alto, California, 2007, 8 pages.
Guzzoni, D., "Active: A Unified Platform for Building Intelligent Assistant Applications", Oct. 25, 2007, 262 pages.
Haas et al., "An Approach to Acquiring and Applying Knowledge", SRI international, Nov. 1980, 22 pages.
Hadidi et al., "Student's Acceptance of Web-Based Course Offerings: An Empirical Assessment", Proceedings of the Americas Conference on Information Systems(AMCIS), 1998, 4 pages.
Haga et al., "A Usability Survey of a Contents-Based Video Retrieval System by Combining Digital Video and an Electronic Bulletin Board", The Internet and Higher Education, vol. 8, No. 3, 2005, pp. 251-262.
Hain et al., "The Papageno TTS System", Siemens AG, Corporate Technology, Munich, Germany TC-STAR Workshop, 2006, 6 pages.
Haitsma et al., "A Highly Robust Audio Fingerprinting System", In Proceedings of the International Symposium on Music Information Retrieval (ISMIR), 2002, 9 pages.
Halbert, D. C., "Programming by Example", Dept. Electrical Engineering and Comp. Sciences, University of California, Berkley, Nov. 1984, pp. 1-76.
Hall, William S., "Adapt Your Program for Worldwide Use with Windows.TM. Internationalization Support", Microsoft Systems Journal, vol. 6, No. 6, Nov./Dec. 1991, pp. 29-58.
Haoui et al., "Embedded Coding of Speech: A Vector Quantization Approach", (Proceedings of the IEEE International Acoustics, Speech and Signal Processing Conference, Mar. 1985), as reprinted in Vector Quantization (IEEE Press, 1990), 1990, pp. 297-299.
Hardwar, Devindra, "Driving App Waze Builds its own Siri for Hands-Free Voice Control", Available online at <http://venturebeat.com/2012/02/09/driving-app-waze-builds-its-own-siri-for-hands-free-voice-control/> retrieved on Feb. 9, 2012, 4 pages.
Harris, F. J., "On the Use of Windows for Harmonic Analysis with the Discrete Fourier Transform", In Proceedings of the IEEE, vol. 66, No. 1, Jan. 1978, 34 pages.

(56) **References Cited**

OTHER PUBLICATIONS

Hartson et al., "Advances in Human-Computer Interaction", Chapters 1, 5, and 6, vol. 3, 1992, 121 pages.
Hashimoto, Yoshiyuki , "Simple Guide for iPhone Siri, Which Can Be Operated with Your Voice", Shuwa System Co., Ltd., vol. 1, Jul. 5, 2012, pp. 8, 130, 131.
Hawkins et al., "Hierarchical Temporal Memory: Concepts, Theory and Terminology", Numenta, Inc., Mar. 27, 2007, 20 pages.
He et al., "Personal Security Agent: KQML-Based PKI", The Robotics Institute, Carnegie-Mellon University, Paper, 1997, 14 pages.
Headset Button Controller v7.3 APK Full App Download for Android, Blackberry, iPhone, 11 pages.
Hear voice from Google translate, Available on URL:https://www.youtube.com/watch?v=18AvMhFqD28, Jan. 28, 2011.
Heger et al., "KNOWBOT: An Adaptive Data Base Interface", Nuclear Science and Engineering, V. 107, No. 2, Feb. 1991, pp. 142-157.
Helm et al., "Building Visual Language Parsers", Proceedings of CHI'91, Proceedings of the SIGCHI Conference on Human Factors in Computing Systems, 1991, 8 pages.
Hendrickson, Bruce, "Latent Semantic Analysis and Fiedler Retrieval", Discrete Algorithms and Mathematics Department, Sandia National Labs, Albuquerque, NM, Sep. 21, 2006, 12 pages.
Hendrix et al., "Developing a Natural Language Interface to Complex Data", ACM Transactions on Database Systems, vol. 3, No. 2, Jun. 1978, pp. 105-147.
Hendrix et al., "The Intelligent Assistant: Technical Considerations Involved in Designing Q&A's Natural-Language Interface", Byte Magazine, Issue 14, Dec. 1987, 1 page.
Hendrix et al., "Transportable Natural-Language Interfaces to Databases", SRI International, Technical Note 228, Apr. 30, 1981, 18 pages.
Hendrix, Gary G., "Human Engineering for Applied Natural Language Processing", SRI International, Technical Note 139, Feb. 1977, 27 pages.
Hendrix, Gary G., "Klaus: A System for Managing Information and Computational Resources", SRI International, Technical Note 230, Oct. 1980, 34 pages.
Hendrix, Gary G., "Lifer: A Natural Language Interface Facility", SRI Stanford Research Institute, Technical Note 135, Dec. 1976, 9 pages.
Hendrix, Gary G., "Natural-Language Interface", American Journal of Computational Linguistics, vol. 8, No. 2, Apr.-Jun. 1982, pp. 56-61.
Hendrix, Gary G., "The Lifer Manual: A Guide to Building Practical Natural Language Interfaces", SRI International, Technical Note 138, Feb. 1977, 76 pages.
Henrich et al., "Language Identification for the Automatic Grapheme-to-Phoneme Conversion of Foreign Words in a German Text-to-Speech System", Proceedings of the European Conference on Speech Communication and Technology, vol. 2, Sep. 1989, pp. 220-223.
Hermansky, H., "Perceptual Linear Predictive (PLP) Analysis of Speech", Journal of the Acoustical Society of America, vol. 87, No. 4, Apr. 1990, 15 pages.
Hermansky, H., "Recognition of Speech in Additive and Convolutional Noise Based on Rasta Spectral Processing", Proceedings of IEEE International Conference on Acoustics, Speech and Signal Processing (ICASSP'93), Apr. 1993, 4 pages.
Heyer et al., "Exploring Expression Data: Identification and Analysis of Coexpressed Genes", Genome Research, vol. 9, 1999, pp. 1106-1115.
Hill, R. D., "Some Important Features and Issues in User Interface Management System", Dynamic Graphics Project, University of Toronto, CSRI, vol. 21, No. 2, Apr. 1987, pp. 116-120.
Hinckley et al., "A Survey of Design Issues in Spatial input", UIST '94 Proceedings of the 7th Annual ACM Symposium on User Interface Software and Technology, 1994, pp. 213-222.
Hiroshi, "Teamwork Station: Towards a Seamless Shared Workspace", NTT Human Interface Laboratories, CSCW 90 Proceedings, Oct. 1990, pp. 13-26.
Hirschman et al., "Multi-Site Data Collection and Evaluation in Spoken Language Understanding", Proceedings of the Workshop on Human Language Technology, 1993, pp. 19-24.
Hobbs et al., "Fastus: A System for Extracting Information from Natural-Language Text", SRI International, Technical Note 519, Nov. 19, 1992, 26 pages.
Hobbs et al., "Fastus: Extracting Information from Natural-Language Texts", SRI International, 1992, pp. 1-22.
Hobbs, Jerry R., "Sublanguage and Knowledge", SRI International, Technical Note 329, Jun. 1984, 30 pages.
Hodjat et al., "Iterative Statistical Language Model Generation for use with an Agent-Oriented Natural Language Interface", Proceedings of HCI International, vol. 4, 2003, pp. 1422-1426.
Hoehfeld et al., "Learning with Limited Numerical Precision Using the Cascade-Correlation Algorithm", IEEE Transactions on Neural Networks, vol. 3, No. 4, Jul. 1992, 18 pages.
Holmes, "Speech System and Research", 1955, pp. 129-135, 152-153.
Holmes, J. N., "Speech Synthesis and Recognition-Stochastic Models for Word Recognition", Published by Chapman & Hall, London, ISBN 0 412 534304, 1998, 7 pages.
Hon et al., "CMU Robust Vocabulary-Independent Speech Recognition System", IEEE International Conference on Acoustics, Speech and Signal Processing (ICASSP-91), Apr. 1991, 4 pages.
Hon et al., "Towards Large Vocabulary Mandarin Chinese Speech Recognition", Conference on Acoustics, Speech, and Signal Processing, ICASSP-94, IEEE International, vol. 1, Apr. 1994, pp. 545-548.
Hopper, Andy, "Pandora—An Experimental System for Multimedia Applications", Olivetti Research Laboratory, Apr. 1990, pp. 19-34.
Horvitz et al., "Handsfree Decision Support: Toward a Non-invasive Human-Computer Interface", Proceedings of the Symposium on Computer Applications in Medical Care, IEEE Computer Society Press, 1995, p. 955.
Horvitz et al., "In Pursuit of Effective Handsfree Decision Support: Coupling Bayesian Inference, Speech Understanding, and User Models", 1995, 8 pages.
Howard, John H., "(Abstract) An Overview of the Andrew File System", Information Technology Center, Carnegie Mellon University; (CMU-ITC-88-062) To Appear in a future issue of the ACM Transactions on Computer Systems, 1988, pp. 1-6.
Huang et al., "A Novel Approach to Robust Speech Endpoint Detection in Car Environments", Acoustics, Speech, and Signal Processing 2000, ICASSP '00, Proceeding S. 2000 IEEE International Conference on Jun. 5-9, 2000, vol. 3, Jun. 5, 2000, pp. 1751-1754.
Huang et al., "Real-Time Software-Based Video Coder for Multimedia Communication Systems", Department of Computer Science and Information Engineering, 1993, 10 pages.
Huang et al., "The SPHINX-II Speech Recognition System: An Overview", Computer, Speech and Language, vol. 7, No. 2, 1993, 14 pages.
Hukin, R. W., "Testing an Auditory Model by Resynthesis", European Conference on Speech Communication and Technology, Sep. 26-29, 1989, pp. 243-246.
Hunt, "Unit Selection in a Concatenative Speech Synthesis System Using a Large Speech Database", Copyright 1996 IEEE. "To appear in Proc. ICASSP-96, May 7-10, Atlanta, GA" ATR Interpreting Telecommunications Research Labs, Kyoto Japan, 1996, pp. 373-376.
iAP Sports Lingo 0x09 Protocol V1.00, May 1, 2006, 17 pages.
IBM Corporation, "Simon Says 'Here's How", Users Manual, 1994, 3 pages.
IBM, "Integrated Audio-Graphics User Interface", IBM Technical Disclosure Bulletin, vol. 33, No. 11, Apr. 1991, 4 pages.
IBM, "Speech Editor", IBM Technical Disclosure Bulletin, vol. 29, No. 10, Mar. 10, 1987, 3 pages.
IBM, "Speech Recognition with Hidden Markov Models of Speech Waveforms", IBM Technical Disclosure Bulletin, vol. 34, No. 1, Jun. 1991, 10 pages.

(56) **References Cited**

OTHER PUBLICATIONS

IBM, "Why Buy: ThinkPad", available at <http://www.pc.ibm.com/us/thinkpad/easeofuse.html>, retrieved on Dec. 19, 2002, 2 pages.
iChat AV, "Video Conferencing for the Rest of Us", Apple—Mac OS X—iChat AV, available at <http://www.apple.com/macosx/features/ichat/>, retrieved on Apr. 13, 2006, 3 pages.
ID3.org, "id3v2.4.0—Frames", available at <http://id3.org/id3v2.4.0-frames?action=print>, retrieved on Jan. 22, 2015, 41 pages.
IEEE 1394 (Redirected from Firewire, Wikipedia, The Free Encyclopedia, available at <http://www.wikipedia.org/wiki/Firewire>, retrieved on Jun. 8, 2003, 2 pages.
Interactive Voice, available at <http://www.helloivee.com/company/>, retrieved on Feb. 10, 2014, 2 pages.
International Preliminary Report on Patentability received for PCT Patent Application No. PCT/GB2009/051684, dated Jun. 23, 2011, 10 pages.
International Preliminary Report on Patentability received for PCT Patent Application No. PCT/US1993/012637, dated Apr. 10, 1995, 7 pages.
International Preliminary Report on Patentability received for PCT Patent Application No. PCT/US1993/012666, dated Mar. 1, 1995, 5 pages.
International Preliminary Report on Patentability received for PCT Patent Application No. PCT/US1994/011011, dated Feb. 28, 1996, 4 pages.
International Preliminary Report on Patentability received for PCT Patent Application No. PCT/US1995/008369, dated Oct. 9, 1996, 4 pages.
International Preliminary Report on Patentability received for PCT Patent Application No. PCT/US2004/002873, dated Feb. 1, 2006, 5 pages.
International Preliminary report on Patentability received for PCT Patent Application No. PCT/US2004/016519, dated Jan. 23, 2006, 12 pages.
International Preliminary Report on Patentability received for PCT Patent Application No. PCT/US2005/030234, dated Mar. 20, 2007, 9 pages.
International Preliminary Report on Patentability received for PCT Patent Application No. PCT/US2008/000042, dated Jul. 7, 2009, 6 pages.
International Preliminary Report on Patentability received for PCT Patent Application No. PCT/US2008/000043, dated Jul. 7, 2009, 8 pages.
International Preliminary Report on Patentability received for PCT Patent Application No. PCT/US2008/000047, dated Jul. 7, 2009, 8 pages.
International Preliminary Report on Patentability received for PCT Patent Application No. PCT/US2009/051954, dated Mar. 24, 2011, 8 pages.
International Preliminary Report on Patentability received for PCT Patent Application No. PCT/US2009/055577, completed on Aug. 6, 2010, 12 pages.
International Preliminary Report on Patentability received for PCT Patent Application No. PCT/US2010/037378, dated Dec. 6, 2011, 9 pages.
International Preliminary Report on Patentability received for PCT Patent Application No. PCT/US2011/020350, dated Jul. 17, 2012, 12 pages.
International Preliminary Report on Patentability received for PCT Patent Application No. PCT/US2011/020825, dated Jan. 13, 2012, 17 pages.
International Preliminary Report on Patentability received for PCT Patent Application No. PCT/US2011/020861, dated Aug. 2, 2012, 11 pages.
International Preliminary Report on Patentability received for PCT Patent Application No. PCT/US2011/037014, dated Dec. 13, 2012, 10 pages.
International Preliminary Report on Patentability received for PCT Patent Application No. PCT/US2012/029810, dated Oct. 3, 2013, 9 pages.
International Preliminary Report on Patentability received for PCT Patent Application No. PCT/US2012/034028, dated Oct. 31, 2013, 7 pages.
International Preliminary Report on Patentability received for PCT Patent Application No. PCT/US2012/040571, dated Dec. 19, 2013, 10 pages.
International Preliminary Report on Patentability received for PCT Patent Application No. PCT/US2012/040801, dated Dec. 19, 2013, 16 pages.
International Preliminary Report on Patentability received for PCT Patent Application No. PCT/US2012/040931, dated Dec. 18, 2014, 9 pages.
International Preliminary Report on Patentability received for PCT Patent Application No. PCT/US2012/043098, dated Jan. 9, 2014, 8 pages.
International Preliminary Report on Patentability received for PCT Patent Application No. PCT/US2012/043100, dated Jan. 9, 2014, 7 pages.
International Preliminary Report on Patentability received for PCT Patent Application No. PCT/US2012/056382, dated Apr. 10, 2014, 9 pages.
International Preliminary Report on Patentability received for PCT Patent Application No. PCT/US2013/028412, dated Sep. 12, 2014, 12 pages.
International Preliminary Report on Patentability received for PCT Patent Application No. PCT/US2013/028920, dated Sep. 18, 2014, 11 pages.
International Preliminary Report on Patentability received for PCT Patent Application No. PCT/US2013/029156, dated Sep. 9, 2014, 7 pages.
International Preliminary Report on Patentability received for PCT Patent Application No. PCT/US2013/041225, dated Nov. 27, 2014, 9 pages.
International Preliminary Report on Patentability received for PCT Patent Application No. PCT/US2013/041233, dated Nov. 18, 2014, 8 pages.
International Preliminary Report on Patentability received for PCT Patent Application No. PCT/US2013/044574, dated Dec. 9, 2014, 8 pages.
International Preliminary Report on Patentability received for PCT Patent Application No. PCT/US2013/044834, dated Dec. 9, 2014, 9 pages.
International Preliminary Report on Patentability received for PCT Patent Application No. PCT/US2013/047659, dated Dec. 31, 2014, 15 pages.
International Preliminary Report on Patentability received for PCT Patent Application No. PCT/US2013/047668, dated Jan. 8, 2015, 13 pages.
International Preliminary Report on Patentability received for PCT Patent Application No. PCT/US2013/052558, dated Feb. 12, 2015, 12 pages.
International Preliminary Report on Patentability received for PCT Patent Application No. PCT/US2013/058916, dated Mar. 19, 2015, 8 pages.
International Preliminary Report on Patentability received for PCT Patent Application No. PCT/US2013/060121, dated Apr. 2, 2015, 6 pages.
International Preliminary Report on Patentability received for PCT Patent Application No. PCT/US2014/015418, dated Aug. 20, 2015, 12 pages.
International Preliminary Report on Patentability received for PCT Patent Application No. PCT/US2014/016988, dated Sep. 3, 2015, 8 pages.
International Preliminary Report on Patentability received for PCT Patent Application No. PCT/US2014/023822, dated Sep. 24, 2015, 12 pages.
International Preliminary Report on Patentability received for PCT Patent Application No. PCT/US2014/023826, dated Sep. 24, 2015, 9 pages.
International Preliminary Report on Patentability received for PCT Patent Application No. PCT/US2014/026871, dated Sep. 24, 2015, 7 pages.

(56) **References Cited**

OTHER PUBLICATIONS

International Preliminary Report on Patentability received for PCT Patent Application No. PCT/US2014/026873, dated Sep. 24, 2015, 9 pages.
International Preliminary Report on Patentability received for PCT Patent Application No. PCT/US2014/028785, dated Sep. 24, 2015, 15 pages.
International Preliminary Report on Patentability received for PCT Patent Application No. PCT/US2014/028950, dated Sep. 24, 2015, 8 pages.
International Preliminary Report on Patentability received for PCT Patent Application No. PCT/US2014/029050, dated Sep. 24, 2015, 7 pages.
International Preliminary Report on Patentability received for PCT Patent Application No. PCT/US2014/029562, dated Sep. 24, 2015, 16 pages.
International Preliminary Report on Patentability received for PCT Patent Application No. PCT/US2014/040393, datead Dec. 8, 2015, 15 pages.
International Preliminary Report on Patentability received for PCT Patent Application No. PCT/US2014/040394, dated Dec. 23, 2015, 7 pages.
International Preliminary Report on Patentability received for PCT Patent Application No. PCT/US2014/040397, dated Dec. 17, 2015, 8 pages.
International Preliminary Report on Patentability received for PCT Patent Application No. PCT/US2014/040401, dated Dec. 8, 2015, 6 pages.
International Preliminary Report on Patentability received for PCT Patent Application No. PCT/US2014/040403 dated Dec. 23, 2015, 7 pages.
International Preliminary Report on Patentability received for PCT Patent Application No. PCT/US2014/040961, dated Dec. 17, 2015, 20 pages.
International Preliminary Report on Patentability received for PCT Patent Application No. PCT/US2014/041159, dated Dec. 17, 2015, 8 pages.
International Preliminary Report on Patentability received for PCT Patent Application No. PCT/US2014/041173, dated Dec. 17, 2015, 9 pages.
International Preliminary Report on Patentability received for PCT Patent Application No. PCT/US2014/049568, dated Feb. 18, 2016, 10 pages.
International Search Report & Written Opinion received for PCT Patent Application No. PCT/US2016/021410, dated Jul. 26, 2016, 19 pages.
International Search Report and Written Opinion received for PCT Patent Application No. PCT/US16/23312, dated Jun. 27, 2016, 7 pages.
International Search Report and Written Opinion received for PCT Patent Application No. PCT/US1994/011011, dated Feb. 8, 1995, 3 pages (International Search Report only).
International Search Report and Written Opinion received for PCT Patent Application No. PCT/US2004/002873, dated Oct. 13, 2005, 7 pages.
International Search Report and Written Opinion received for PCT Patent Application No. PCT/US2004/016519, dated Nov. 3, 2005, 6 pages.
International Search Report and Written Opinion received for PCT Patent Application No. PCT/US2005/030234, dated Mar. 17, 2006, 11 pages.
International Search Report and Written Opinion received for PCT Patent Application No. PCT/US2005/038819, dated Apr. 5, 2006, 12 pages.
International Search Report and Written Opinion received for PCT Patent Application No. PCT/US2006/048669, dated Jul. 2, 2007, 12 pages.
International Search Report and Written Opinion received for PCT Patent Application No. PCT/US2006/048670, dated May 21, 2007, 11 pages.
International Search Report and Written Opinion received for PCT Patent Application No. PCT/US2006/048753, dated Jun. 19, 2007, 15 pages.
International Search Report and Written Opinion received for PCT Patent Application No. PCT/US2007/026243, dated Mar. 31, 2008, 10 pages.
International Search Report and Written Opinion received for PCT Patent Application No. PCT/US2007/088872, dated May 8, 2008, 8 pages.
International Search Report and Written Opinion received for PCT Patent Application No. PCT/US2007/088873, dated May 8, 2008, 7 pages.
International Search Report and Written Opinion received for PCT Patent Application No. PCT/US2008/000032, dated Jun. 12, 2008, 7 pages.
International Search Report and Written Opinion received for PCT Patent Application No. PCT/US2008/000042, dated May 21, 2008, 7 pages.
International Search Report and Written Opinion received for PCT Patent Application No. PCT/US2008/000043, dated Oct. 10, 2008, 12 pages.
International Search Report and Written Opinion received for PCT Patent Application No. PCT/US2008/000045, dated Jun. 12, 2008, 7 pages.
International Search Report and Written Opinion received for PCT Patent Application No. PCT/US2008/000047, dated Sep. 11, 2008, 12 pages.
International Search Report and Written Opinion received for PCT Patent Application No. PCT/US2008/000059, dated Sep. 19, 2008, 18 pages.
International Search Report and Written Opinion received for PCT Patent Application No. PCT/US2008/000061, dated Jul. 1, 2008, 13 pages.
International Search Report and Written Opinion received for PCT Patent Application No. PCT/US2009/051954, dated Oct. 30, 2009, 10 pages.
International Search Report and Written Opinion received for PCT Patent Application No. PCT/US2009/055577, dated Jan. 26, 2010, 9 pages.
International Search Report and Written Opinion received for PCT Patent Application No. PCT/US2010/037378, dated Aug. 25, 2010, 14 pages.
International Search Report and Written Opinion received for PCT Patent Application No. PCT/US2011/020350, dated Jun. 30, 2011, 17 pages.
International Search Report and Written Opinion received for PCT Patent Application No. PCT/US2011/020825, dated Mar. 18, 2011, 9 pages.
International Search Report and Written Opinion received for PCT Patent Application No. PCT/US2011/020861, dated Nov. 29, 2011, 12 pages.
International Search Report and Written Opinion received for PCT Patent Application No. PCT/US2012/029810, dated Aug. 17, 2012, 11 pages.
International Search Report and Written Opinion received for PCT Patent Application No. PCT/US2012/034028, dated Jun. 11, 2012, 9 pages.
International Search Report and Written Opinion received for PCT Patent Application No. PCT/US2012/040571, dated Nov. 16, 2012, 14 pages.
International Search Report and Written Opinion received for PCT Patent Application No. PCT/US2012/040801, dated Oct. 22, 2012, 20 pages.
International Search Report and Written Opinion received for PCT Patent Application No. PCT/US2012/040931, dated Feb. 1, 2013, 4 pages (International Search Report only).
International Search Report and Written Opinion received for PCT Patent Application No. PCT/US2012/043098, dated Nov. 14, 2012, 9 pages.
International Search Report and Written Opinion received for PCT Patent Application No. PCT/US2012/043100, dated Nov. 15, 2012, 8 pages.

(56) **References Cited**

OTHER PUBLICATIONS

International Search Report and Written Opinion received for PCT Patent Application No. PCT/US2012/056382, dated Dec. 20, 2012, 11 pages.
International Search Report and Written Opinion received for PCT Patent Application No. PCT/US2013/028412, dated Sep. 26, 2013, 17 pages.
International Search Report and Written Opinion received for PCT Patent Application No. PCT/US2013/028920, dated Jun. 27, 2013, 14 pages.
International Search Report and Written Opinion received for PCT Patent Application No. PCT/US2013/029156, dated Jul. 15, 2013, 9 pages.
International Search Report and Written Opinion received for PCT Patent Application No. PCT/US2013/040971, dated Nov. 12, 2013, 11 pages.
International Search Report and Written Opinion received for PCT Patent Application No. PCT/US2013/041225, dated Aug. 23, 2013, 3 pages (International Search Report only).
International Search Report and Written Opinion received for PCT Patent Application No. PCT/US2013/044574, dated Sep. 27, 2013, 12 pages.
International Search Report and Written Opinion received for PCT Patent Application No. PCT/US2013/044834, dated Dec. 20, 2013, 13 pages.
International Search Report and Written Opinion received for PCT Patent Application No. PCT/US2013/047659, dated Jul. 7, 2014, 25 pages.
International Search Report and Written Opinion received for PCT Patent Application No. PCT/US2013/047668, dated Feb. 13, 2014, 17 pages.
International Search Report and Written Opinion received for PCT Patent Application No. PCT/US2013/052558, dated Jan. 30, 2014, 15 pages.
International Search Report and Written Opinion received for PCT Patent Application No. PCT/US2013/058916, dated Sep. 8, 2014, 10 pages.
International Search Report and Written Opinion received for PCT Patent Application No. PCT/US2013/060121, dated Dec. 6, 2013, 8 pages.
International Search Report and Written Opinion received for PCT Patent Application No. PCT/US2014/015418, dated Aug. 26, 2014, 17 pages.
International Search Report and Written Opinion received for PCT Patent Application No. PCT/US2014/016988, dated Apr. 29, 2014, 10 pages.
International Search Report and Written Opinion received for PCT Patent Application No. PCT/US2014/023822, dated Sep. 25, 2014, 14 pages.
International Search Report and Written Opinion received for PCT Patent Application No. PCT/US2014/023826, dated Oct. 9, 2014, 13 pages.
International Search Report and Written Opinion received for PCT Patent Application No. PCT/US2014/026871, dated Jul. 23, 2014, 9 pages.
International Search Report and Written Opinion received for PCT Patent Application No. PCT/US2014/026873, dated Jan. 5, 2015, 11 pages.
International Search Report and Written Opinion received for PCT Patent Application No. PCT/US2014/028785, dated Oct. 17, 2014, 23 pages.
International Search Report and Written Opinion received for PCT Patent Application No. PCT/US2014/028950, dated Nov. 25, 2014, 10 pages.
International Search Report and Written Opinion received for PCT Patent Application No. PCT/US2014/029050, dated Jul. 31, 2014, 9 pages.
International Search Report and Written Opinion received for PCT Patent Application No. PCT/US2014/029562, dated Sep. 18, 2014, 21 pages.
International Search Report and Written Opinion received for PCT Patent Application No. PCT/US2014/040393, dated Dec. 8, 2014, 23 pages.
International Search Report and Written Opinion received for PCT Patent Application No. PCT/US2014/040394, dated Aug. 8, 2014, 11 pages.
International Search Report and Written Opinion received for PCT Patent Application No. PCT/US2014/040397, dated Aug. 27, 2014, 12 pages.
International Search Report and Written Opinion received for PCT Patent Application No. PCT/US2014/040401, dated Sep. 4, 2014, 10 pages.
International Search Report and Written Opinion received for PCT Patent Application No. PCT/US2014/040403, dated Sep. 23, 2014, 9 pages.
International Search Report and Written Opinion received for PCT Patent Application No. PCT/US2014/040961, dated Mar. 10, 2015, 5 pages.
International Search Report and Written Opinion received for PCT Patent Application No. PCT/US2014/041159, dated Sep. 26, 2014, 10 pages.
International Search Report and Written Opinion received for PCT Patent Application No. PCT/US2014/041173, dated Sep. 10, 2014, 11 pages.
International Search Report and Written Opinion received for PCT Patent Application No. PCT/US2014/049568, dated Nov. 14, 2014, 12 pages.
International Search Report and Written Opinion received for PCT Patent Application No. PCT/US2014/053951, dated Dec. 8, 2014, 11 pages.
International Search Report and Written Opinion received for PCT Patent Application No. PCT/US2014/053957, dated Feb. 19, 2015, 11 pages.
International Search Report and Written Opinion received for PCT Patent Application No. PCT/US2014/053958, dated Feb. 19, 2015, 10 pages.
International Search Report and Written Opinion received for PCT Patent Application No. PCT/US2015/019320, dated Jul. 2, 2015, 14 pages.
International Search Report and Written Opinion received for PCT Patent Application No. PCT/US2015/019321, dated Jun. 3, 2015, 11 pages.
International Search Report and Written Opinion received for PCT Patent Application No. PCT/US2015/019322, dated Jun. 18, 2015, 16 pages.
International Search Report and Written Opinion received for PCT Patent Application No. PCT/US2015/023089, dated Aug. 20, 2015. 16 pages.
International Search Report and Written Opinion received for PCT Patent Application No. PCT/US2015/023097, dated Jul. 7, 2015, 15 pages.
International Search Report and Written Opinion received for PCT Patent Application No. PCT/US2015/023593, dated Aug. 14, 2015, 16 pages.
International Search Report and Written Opinion received for PCT Patent Application No. PCT/US2015/025188, dated Jun. 23, 2015, 11 pages.
International Search Report and Written Opinion received for PCT Patent Application No. PCT/US2015/029554, dated Jul. 16, 2015, 11 pages.
International Search Report and Written Opinion received for PCT Patent Application No. PCT/US2015/032470, dated Oct. 1, 2015, 13 pages.
International Search Report and Written Opinion received for PCT Patent Application No. PCT/US2015/032724, dated Jul. 27, 2015, 11 pages.
International Search Report and Written Opinion received for PCT Patent Application No. PCT/US2015/033051, dated Aug. 5, 2015, 14 pages.
International Search Report and Written Opinion received for PCT Patent Application No. PCT/US2015/047062, dated Jan. 13, 2016, 25 pages.

(56) **References Cited**

OTHER PUBLICATIONS

International Search Report and Written Opinion received for PCT Patent Application No. PCT/US2015/047064, dated Nov. 13, 2015, 13 pages.
International Search Report and Written Opinion received for PCT Patent Application No. PCT/US2015/047281, dated Dec. 17, 2015, 19 pages.
International Search Report and Written Opinion received for PCT Patent Application No. PCT/US2015/047553, dated Jan. 5, 2016, 10 pages.
International Search Report and Written opinion received for PCT Patent Application No. PCT/US2015/047583, dated Feb. 3, 2016, 11 pages.
International Search Report and Written Opinion received for PCT Patent Application No. PCT/US2015/047584, dated Nov. 9, 2015, 10 pages.
International Search Report and Written Opinion received for PCT Patent Application No. PCT/US2015/053365, dated Mar. 10, 2016, 20 pages.
International Search Report and Written Opinion received for PCT Patent Application No. PCT/US2015/053366, dated Apr. 26, 2016, 16 pages.
International Search Report and Written Opinion received for PCT Patent Application No. PCT/US2016/021103, dated Jun. 8, 2016, 15 pages.
International Search Report and Written Opinion received for PCT Patent Application No. PCT/US2016/021104, dated Jun. 8, 2016, 15 pages.
International Search Report and Written opinion received for PCT Patent Application No. PCT/US2016/021409, dated May 26, 2016, 22 pages.
International Search report and Written Opinion received for PCT Patent Application No. PCT/US2016/024666, dated Jun. 10, 2016, 13 pages.
International Search Report and Written Opinion received for PCT Patent Application No. PCT/US2016/025404, dated Jun. 24, 2016, 21 pages.
International Search Report and Written Opinion received for PCT Patent Application No. PCT/US2016/025407, dated Jun. 23, 2016, 18 pages.
International Search Report and Written Opinion received for PCT Patent Application No. PCT/US2016/025408, dated Aug. 11, 2016, 19 pages.
International Search Report and Written Opinion received for PCT Patent Application No. PCT/US2016/031059, dated Aug. 8, 2016, 11 pages.
International Search Report and Written Opinion received for PCT Patent Application No. PCT/US2016/031549, dated Aug. 5, 2016, 35 pages.
International Search Report and Written Opinion received for PCT Patent Application No. PCT/US2016/031550, dated Aug. 4, 2016, 13 pages.
International Search Report and Written Opinion received for PCT Patent Application No. PCT/US2016/035105, dated Aug. 29, 2016, 25 pages.
International Search Report and Written Opinion received for PCT Patent Application No. PCT/US2016/035107, dated Aug. 31, 2016, 26 pages.
International Search Report and Written Opinion received for PCT Patent Application No. PCT/US2016/035112, dated Aug. 22, 2016, 21 pages.
International Search Report received for PCT Patent Application No. PCT/GB2009/051684, dated Mar. 12, 2010, 4 pages.
International Search Report received for PCT Patent Application No. PCT/US1993/012666, dated Nov. 9, 1994, 8 pages.
International Search Report received for PCT Patent Application No. PCT/US1994/000687, dated Jun. 3, 1994, 1 page.
International Search Report received for PCT Patent Application No. PCT/US1994/00077, dated May 25, 1994, 2 pages.
International Search Report received for PCT Patent Application No. PCT/US1995/008369, dated Nov. 8, 1995, 6 pages.
International Search Report received for PCT Patent Application No. PCT/US1995/013076, dated Feb. 2, 1996, 1 page.
International Search Report received for PCT Patent Application No. PCT/US1996/01002, dated Oct. 30, 1996, 4 pages.
International Search Report received for PCT Patent Application No. PCT/US2002/024669, dated Nov. 5, 2002, 3 pages.
International Search Report received for PCT Patent Application No. PCT/US2002/024670, dated Sep. 26, 2002, 3 pages.
International Search Report received for PCT Patent Application No. PCT/US2002/033330, dated Feb. 4, 2003, 6 pages.
International Search Report received for PCT Patent Application No. PCT/US2005/046797, dated Nov. 24, 2006, 6 pages.
International Search Report received for PCT Patent Application No. PCT/US2011/037014, dated Oct. 4, 2011, 6 pages.
International Search Report received for PCT Patent Application No. PCT/US2013/041233, dated Nov. 22, 2013, 3 pages.
Intraspect Software, "The Intraspect Knowledge Management Solution: Technical Overview", available at <http://tomgruber.org/writing/intraspect-whitepaper-1998.pdf>, 1998, 18 pages.
Invitation to Pay Additional Fees and Partial International Search Report received for PCT Patent Application No. PCT/US2004/016519, dated Aug. 4, 2005, 6 pages.
Invitation to Pay Additional Fees and Partial International Search Report received for PCT Patent Application No. PCT/US2005/046797, dated Jul. 3, 2006, 6 pages.
Invitation to Pay Additional Fees and Partial International Search Report received for PCT Patent Application No. PCT/US2006/048738, dated Jul. 10, 2007, 4 pages.
Invitation to Pay Additional Fees and Partial International Search Report received for PCT Patent Application No. PCT/US2011/020350, dated Apr. 14, 2011, 5 pages.
Invitation to Pay Additional Fees and Partial International Search Report received for PCT Patent Application No. PCT/US2015/023089, dated Jun. 17, 2015, 7 pages.
Invitation to Pay Additional Fees received for PCT Application No. PCT/US2016/021410, dated Apr. 28, 2016, 2 pages.
Invitation to Pay Additional Fees received for PCT Patent Application No. PCT/US2008/000043, dated Jun. 27, 2008, 4 pages.
Invitation to Pay Additional Fees received for PCT Patent Application No. PCT/US2008/000047, dated Jul. 4, 2008, 4 pages.
Invitation to Pay Additional Fees received for PCT Patent Application No. PCT/US2011/037014, dated Aug. 2, 2011, 6 pages.
Invitation to Pay Additional Fees received for PCT Patent Application No. PCT/US2012/040801, dated Aug. 8, 2012, 2 pages.
Invitation to Pay Additional Fees received for PCT Patent Application No. PCT/US2013/047659, dated Feb. 27, 2014, 7 pages.
Invitation to Pay Additional Fees received for PCT Patent Application No. PCT/US2013/052558, dated Nov. 7, 2013, 6 pages.
Invitation to pay additional fees received for PCT Patent Application No. PCT/US2014/029562, dated Jul. 4, 2014, 7 pages.
Invitation to Pay Additional Fees received for PCT Patent Application No. PCT/US2014/040393, dated Sep. 17, 2014, 7 pages.
Invitation to Pay Additional Fees received for PCT Patent Application No. PCT/US2014/040961, dated Jan. 14, 2015, 3 pages.
Invitation to Pay Additional Fees received for PCT Patent Application No. PCT/US2015/047281, dated Oct. 8, 2015, 6 pages.
Invitation to Pay Additional Fees received for PCT Patent Application No. PCT/US2015/053366, dated Feb. 19, 2016, 8 pages.
Invitation to Pay Additional Fees received for PCT Patent Application No. PCT/US2016/025408, dated May 13, 2016, 2 pages.
Invitation to Pay Additional Fees received for PCT Patent Application No. PCT/US2014/028785, dated Jul. 4, 2014, 7 pages.
Invitation to pay additional fees received for the PCT Patent Application No. PCT/US2014/015418, dated May 26, 2014, 5 pages.
Iowegian International, "FIR Filter Properties, DSPGuru, Digital Signal Processing Central", available at <http://www.dspguru.com/dsp/faq/fir/properties> retrieved on Jul. 28, 2010, 6 pages.
iPhone Hacks, "Native iPhone MMS Application Released", available at <http://www.iphonehacks.com/2007/12/iphone-mms-app.html>, retrieved on Dec. 25, 2007, 5 pages.

(56) **References Cited**

OTHER PUBLICATIONS

iPhoneChat, "iChat for iPhone in JavaScript", available at <http://www.publictivity.com/iPhoneChat/>, retrieved on Dec. 25, 2007, 2 pages.
Iso-Sipila et al., "Multi-Lingual Speaker-Independent Voice User Interface for Mobile Devices", ICASSP 2006 Proceedings, IEEE International Conference on Acoustics, Speech and Signal Processing May 14, 2006, pp. 1-1081.
Issar et al., "CMU's Robust Spoken Language Understanding System", Proceedings of Eurospeech, 1993, 4 pages.
Issar, Sunil, "Estimation of Language Models for New Spoken Language Applications", Proceedings of 4th International Conference on Spoken language Processing, Oct. 1996, 4 pages.
Jabra Corporation, "FreeSpeak: BT200 User Manual", 2002, 42 pages.
Jabra, "Bluetooth Headset: User Manual", 2005, 17 pages.
Jabra, "Bluetooth Introduction", 2004, 15 pages.
Jacobs et al., "Scisor: Extracting Information from On-Line News", Communications of the ACM, vol. 33, No. 11, Nov. 1990, 10 pages.
Janas, Jurgen M., "The Semantics-Based Natural Language Interface to Relational Databases", Chapter 6, Cooperative Interfaces to Information Systems, 1986, pp. 143-188.
Jawaid et al., "Machine Translation with Significant Word Reordering and Rich Target-Side Morphology", WDS'11 Proceedings of Contributed Papers, Part I, 2011, pp. 161-166.
Jaybird, "Everything Wrong with AIM: Because We've All Thought About It", available at <http://www.psychonoble.com/archives/articles/82.html>, May 24, 2006, 3 pages.
Jeffay et al., "Kernel Support for Live Digital Audio and Video", In Proc. of the Second Intl. Workshop on Network and Operating System Support for Digital Audio and Video, vol. 614, Nov. 1991, pp. 10-21.
Jelinek et al., "Interpolated Estimation of Markov Source Parameters from Sparse Data", In Proceedings of the Workshop on Pattern Recognition in Practice, May 1980, pp. 381-397.
Jelinek, F., "Self-Organized Language Modeling for Speech Recognition", Readings in Speech Recognition, Edited by Alex Waibel and Kai-Fu Lee, Morgan Kaufmann Publishers, Inc., ISBN: 1-55860-124-4, 1990, 63 pages.
Jennings et al., "A Personal News Service Based on a User Model Neural Network", IEICE Transactions on Information and Systems, vol. E75-D, No. 2, Mar. 1992, 12 pages.
Ji et al., "A Method for Chinese Syllables Recognition Based upon Sub-syllable Hidden Markov Model", 1994 International Symposium on Speech, Image Processing and Neural Networks, Hong Kong, Apr. 1994, 4 pages.
Jiang et al., "A Syllable-based Name Transliteration System", Proc. of the 2009 Named Entities Workshop, Aug. 7, 2009, pp. 96-99.
Johnson, Jeff A., "A Comparison of User Interfaces for Panning on a Touch-Controlled Display", CHI '95 Proceedings, 1995, 8 pages.
Johnson, Julia Ann., "A Data Management Strategy for Transportable Natural Language Interfaces", Doctoral Thesis Submitted to the Department of Computer Science, University of British Columbia, Canada, Jun. 1989, 285 pages.
Jones, J., "Speech Recognition for Cyclone", Apple Computer, Inc., E.R.S. Revision 2.9, Sep. 10, 1992, 93 pages.
Jouvet et al., "Evaluating Grapheme-to-phoneme Converters in Automatic Speech Recognition Context", IEEE,, 2012,, pp. 4821-4824.
Julia et al., "http://www.speech.sri.com/demos/atis.html", Proceedings of AAAI, Spring Symposium, 1997, 5 pages.
Julia et al., "Un Editeur Interactif De Tableaux Dessines a Main Levee (An Interactive Editor for Hand-Sketched Tables)", Traitement du Signal, vol. 12, No. 6, 1995, pp. 619-626.
Kaeppner et al., "Architecture of HeiPhone: A Testbed for Audio/Video Teleconferencing", IBM European Networking Center, 1993.
Kahn et al., "CoABS Grid Scalability Experiments", Autonomous Agents and Multi-Agent Systems, vol. 7, 2003, pp. 171-178.
Kamba et al., "Using Small Screen Space More Efficiently", CHI '96 Proceedings of the SIGCHI Conference on Human Factors in Computing Systems, Apr. 13-18, 1996, pp. 383-390.
Kamel et al., "A Graph Based Knowledge Retrieval System", IEEE International Conference on Systems, Man and Cybernetics, 1990, pp. 269-275.
Kanda et al., "Robust Domain Selection Using Dialogue History in Multi-domain Spoken Dialogue Systems", Journal of Information Processing Society, vol. 48, No. 5, May 15, 2007, pp. 1980-1989. (English Abstract Submitted).
Kanda et al., "Spoken Language Understanding Using Dialogue Context in Database Search Task", Journal of Information Processing Society of Japan, vol. 47, No. 6, Jun. 15, 2016, pp, 1802-1811. (English Abstract Submitted).
Kane et al., "Slide Rule: Making Mobile Touch Screens Accessible to Blind People Using Multi-Touch Interaction Techniques", Assets, Oct. 13-15, 2008, pp. 73-80.
Kang et al., "Quality Improvement of LPC-Processed Noisy Speech by Using Spectral Subtraction", IEEE Transactions on Acoustics, Speech and Signal Processing, vol. 37, No. 6, Jun. 1989, pp. 939-942.
Karp, P. D., "A Generic Knowledge-Base Access Protocol", Available online at <http://lecture.cs.buu.ac.th/-f50353/Document/gfp.pdf>, May 12, 1994, 66 pages.
Katz et al., "Exploiting Lexical Regularities in Designing Natural Language Systems", Proceedings of the 12th International Conference on Computational Linguistics, 1988, pp. 1-22.
Katz et al., "REXTOR: A System for Generating Relations from Natural Language", Proceedings of the ACL Workshop on Natural Language Processing and Information Retrieval (NLP&IR), Oct. 2000, 11 pages.
Katz, Boris, "A Three-Step Procedure for Language Generation", Massachusetts Institute of Technology, A.I. Memo No. 599, Dec. 1980, pp. 1-40.
Katz, Boris, "Annotating the World Wide Web Using Natural Language", Proceedings of the 5th RIAO Conference on Computer Assisted Information Searching on the Internet, 1997, 7 pages.
Katz, Boris, "Using English for Indexing and Retrieving", Proceedings of the 1st RIAO Conference on User-Oriented Content-Based Text and Image Handling, 1988, pp. 314-332.
Katz, S. M., "Estimation of Probabilities from Sparse Data for the Language Model Component of a Speech Recognizer", IEEE Transactions on Acoustics, Speech and Signal Processing, vol. ASSP-35, No. 3, Mar. 1987, 3 pages.
Kazemzadeh et al., "Acoustic Correlates of User Response to Error in Human-Computer Dialogues", Automatic Speech Recognition and Understanding, 2003, pp. 215-220.
Kazmucha, Allyson, "How to Send Map Locations Using iMessage", iMore.com, Available at <http://www.imore.com/how-use-imessage-share-your-location-your-iphone>, Aug. 2, 2012, 6 pages.
Keahey et al., "Non-Linear Image Magnification", Apr. 24, 1996, 11 pages.
Keahey et al., "Nonlinear Magnification Fields", Proceedings of the 1997 IEEE Symposium on Information Visualization, 1997, 12 pages.
Keahey et al., "Techniques for Non-Linear Magnification Transformations", IEEE Proceedings of Symposium on Information Visualization, Oct. 1996, pp. 38-45.
Keahey et al., "Viewing Text With Non-Linear Magnification: An Experimental Study", Department of Computer Science, Indiana University, Apr. 24, 1996, pp. 1-9.
Kennedy, P. J., "Digital Data Storage Using Video Disc", IBM Technical Disclosure Bulletin, vol. 24, No. 2, Jul. 1981, p. 1171.
Kerr, "An Incremental String Search in C: This Data Matching Algorithm Narrows the Search Space with each Keystroke", Computer Language, vol. 6, No. 12, Dec. 1989, pp. 35-39.
Kickstarter, "Ivee Sleek: Wi-Fi Voice-Activated Assistant", available at <https://www.kickstarter.com/projects/ivee/ivee-sleek-wi-fi-voice-activated-assistant>, retrieved on Feb. 10, 2014, 13 pages.
Kikui, Gen-Itiro, "Identifying the Coding System and Language of On-Line Documents on the Internet", International Conference on Computational, Aug. 1996, pp. 652-657.

(56) **References Cited**

OTHER PUBLICATIONS

Kim, E.A. S., "The Structure and Processing of Fundamental Frequency Contours", University of Cambridge, Doctoral Thesis, Apr. 1987, 378 pages.
Kirstein et al., "Piloting of Multimedia Integrated Communications for European Researchers", Proc. INET '93, 1993, pp. 1-12.
Kitano, H., "PhiDM-Dialog, An Experimental Speech-to-Speech Dialog Translation System", Computer, vol. 24, No. 6, Jun. 1991, 13 pages.
Kitaoka et al., "Detection and Recognition of Correction Utterances on Misrecognition of Spoken Dialog System", Systems and Computers in Japan, vol. 36, No. 11 Oct. 2005, pp. 24-33.
Kjelldahl et al., "Multimedia—Principles, Systems, and Applications", Proceedings of the 1991 Eurographics Workshop on Multimedia Systems, Applications, and Interaction, Apr. 1991.
Klabbers et al., "Reducing Audible Spectral Discontinuities", IEEE Transactions on Speech and Audio Processing, vol. 9, No. 1, Jan. 2001, 13 pages.
Klatt et al., "Linguistic Uses of Segmental Duration in English: Acoustic and Perpetual Evidence", Journal of the Acoustical Society of America, vol. 59, No. 5, May 1976, 16 pages.
Kline et al., "Improving GUI Accessibility for People with Low Vision", CHI '95 Proceedings of the SIGCHI Conference on Human Factors in Computing Systems, May 7-11, 1995, pp. 114-121.
Kline et al., "UnWindows 1.0: X Windows Tools for Low Vision Users", ACM SIGCAPH Computers and the Physically Handicapped, No. 49, Mar. 1994, pp. 1-5.
Knight et al., "Heuristic Search", Production Systems, Artificial Intelligence, 2nd ed., McGraw-Hill, Inc., 1983-1991.
Knownav, "Knowledge Navigator", YouTube Video available at <http://www.youtube.com/watch?v=QRH8eimU_20>, Apr. 29, 2008, 1 page.
Kohler, Joachim, "Multilingual Phone Models for Vocabulary-Independent Speech Recognition Tasks", Speech Communication, vol. 35, No. 1-2, Aug. 2001, pp. 21-30.
Kominek et al., "Impact of Durational Outlier Removal from Unit Selection Catalogs", 5th ISCA Speech Synthesis Workshop, Jun. 14-16, 2004, 6 pages.
Konolige, Kurt, "A Framework for a Portable Natural-Language Interface to Large Data Bases", SRI International, Technical Note 197, Oct. 12, 1979, 54 pages.
Kroon et al., "Pitch Predictors with High Temporal Resolution", IEEE, vol. 2, 1990, pp. 661-664.
Kroon et al., "Quantization Procedures for the Excitation in CELP Coders", (Proceedings of IEEE International Acoustics, Speech, and Signal Processing Conference, Apr. 1987), as reprinted in Vector Quantization (IEEE Press, 1990), 1990, pp. 320-323.
Kubala et al., "Speaker Adaptation from a Speaker-Independent Training Corpus", International Conference on Acoustics, Speech and Signal Processing (ICASSP'90), Apr. 1990, 4 pages.
Kubala et al., "The Hub and Spoke Paradigm for CSR Evaluation", Proceedings of the Spoken Language Technology Workshop, Mar. 1994, 9 pages.
Kuo et al., "A Radical-Partitioned coded Block Adaptive Neural Network Structure for Large-Volume Chinese Characters Recognition", International Joint Conference on Neural Networks, vol. 3, Jun. 1992, pp. 597-601.
Kuo et al., "A Radical-Partitioned Neural Network System Using a Modified Sigmoid Function and a Weight-Dotted Radical Selector for Large-Volume Chinese Character Recognition VLSI", IEEE Int. Symp. Circuits and Systems, Jun. 1994, pp. 3862-3865.
Kurlander et al., "Comic Chat", [Online], 1996 [Retrieved on: Feb. 4, 2013], SIGGRAPH '96 Proceedings of the 23rd annual conference on Computer graphics and interactive techniques, [Retrieved from: http://delivery.acm.org/10.1145/240000/237260/p225-kurlander.pdf], 1996, pp. 225-236.
Ladefoged, Peter, "A Course in Phonetics", New York, Harcourt, Brace, Jovanovich, Second Edition, 1982.
Laface et al., "A Fast Segment Viterbi Algorithm for Large Vocabulary Recognition", International Conference on Acoustics, Speech, and Signal Processing, vol. 1, May 1995, pp. 560-563.
Lafferty et al., "Conditional Random Fields: Probabilistic Models for Segmenting and Labeling Sequence Data", Proceedings of the 18th International Conference on Machine Learning, 2001, 9 pages.
Laird et al., "SOAR: An Architecture for General Intelligence", Artificial Intelligence, vol. 33, 1987, pp. 1-64.
Lamel et al., "Generation and synthesis of Broadcast Messages", Proceedings of ESCA-NATO Workshop: Applications of Speech Technology, Sep. 1, 1993, 4 pages.
Lamping et al., "Laying Out and Visualizing Large Trees Using a Hyperbolic Space", Proceedings of the ACM Symposium on User Interface Software and Technology, Nov. 1994, pp. 13-14.
Lamping et al., "Visualizing Large Trees Using the Hyperbolic Browser", Apple Inc., Video Clip, MIT Media Library, on a CD, 1995.
Langley et al., "A Design for the ICARUS Architechture", SIGART Bulletin, vol. 2, No. 4, 1991, pp. 104-109.
Lantz et al., "Towards a Universal Directory Service", Departments of Computer Science and Electrical Engineering, Stanford University, 1985, pp. 250-260.
Lantz, Keith, "An Experiment in Integrated Multimedia Conferencing", 1986, pp. 267-275.
Larks, "Intelligent Software Agents", available at <http://www.cs.cmu.edu/~softagents/larks.html> retrieved on Mar. 15, 2013, 2 pages.
Lau et al., "Trigger-Based Language Models: A Maximum Entropy Approach", ICASSP'93 Proceedings of the 1993 IEEE international conference on Acoustics, speech, and signal processing: speech processing—vol. II, 1993, pp. 45-48.
Lauwers et al., "Collaboration Awareness in Support of Collaboration Transparency: Requirements for the Next Generation of Shared Window Systems", CHI'90 Proceedings, 1990, pp. 303-311.
Lauwers et al., "Replicated Architectures for Shared Window Systems: A Critique", COCS '90 Proceedings of the ACM SIGOIS and IEEE CS TC-OA conference on Office information systems, ACM SIGOIS Bulletin, 1990, pp. 249-260.
Lazzaro, Joseph J., "Adapting Desktop Computers to Meet the Needs of Disabled Workers is Easier Than You Might Think", Computers for the Disabled, BYTE Magazine, Jun. 1993, 4 pages.
Leahy et al., "Effect of Touch Screen Target Location on User Accuracy", Proceedings of the Human Factors Society 34th Annual Meeting, 1990, 5 pages.
Lee et al., "A Multi-Touch Three Dimensional Touch-Sensitive Tablet", CHI '85 Proceedings of the SIGCHI Conference on Human Factors in Computing Systems, Apr. 1985, pp. 21-25.
Lee et al., "A Real-Time Mandarin Dictation Machine for Chinese Language with Unlimited Texts and Very Large Vocabulary", International Conference on Acoustics, Speech and Signal Processing, vol. 1, Apr. 1990, 5 pages.
Lee et al., "Golden Mandarin (II)—An Improved Single-Chip Real-Time Mandarin Dictation Machine for Chinese Language with Very Large Vocabulary", IEEE International Conference of Acoustics, Speech and Signal Processing, vol. 2, 1993, 4 pages.
Lee et al., "Golden Mandarin (II)—An Intelligent Mandarin Dictation Machine for Chinese Character Input with Adaptation/Learning Functions", International Symposium on Speech, Image Processing and Neural Networks, Hong Kong, Apr. 1994, 5 pages.
Lee et al., "On URL Normalization", Proceedings of the International Conference on Computational Science and its Applications, ICCSA 2005, pp. 1076-1085.
Lee et al., "System Description of Golden Mandarin (I) Voice Input for Unlimited Chinese Characters", International Conference on Computer Processing of Chinese & Oriental Languages, vol. 5, No. 3 & 4, Nov. 1991, 16 pages.
Lee, K. F., "Large-Vocabulary Speaker-Independent Continuous Speech Recognition: The SPHINX System", Partial Fulfillment of the Requirements for the Degree of Doctorof Philosophy, Computer Science Department, Carnegie Mellon University, Apr. 1988, 195 pages.
Lee, Kai-Fu, "Automatic Speech Recognition", 1989, 14 pages (Table of Contents).

(56) **References Cited**

OTHER PUBLICATIONS

Lemon et al., "Multithreaded Context for Robust Conversational Interfaces: Context-Sensitive Speech Recognition and Interpretation of Corrective Fragments", ACM Transactions on Computer-Human Interaction, vol. 11, No. 3, Sep. 2004, pp. 241-267.
Leong et al., "CASIS: A Context-Aware Speech Interface System", Proceedings of the 10th International Conference on Intelligent User Interfaces, Jan. 2005, pp. 231-238.
Leung et al., "A Review and Taxonomy of Distortion-Oriented Presentation Techniques", ACM Transactions on Computer-Human Interaction (TOCHI), vol. 1, No. 2, Jun. 1994, pp. 126-160.
Leveseque et al., "A Fundamental Tradeoff in Knowledge Representation and Reasoning", Readings in Knowledge Representation, 1985, 30 pages.
Levinson et al., "Speech synthesis in telecommunications", IEEE Communications Magazine, vol. 31, No. 11, Nov. 1993, pp. 46-53.
Lewis, "Speech synthesis in a computer aided learning environment", UK IT, Mar. 19-22, 1990, pp. 294-298.
Lewis, Cameron, "Task Ave for iPhone Review", Mac Life, Available at <http://www.maclife.com/article/reviews/task_ave_iphone_review>, Mar. 3, 2011, 5 pages.
Lewis, Peter, "Two New Ways to Buy Your Bits", CNN Money, available at <http://money.cnn.com/2003/12/30/commentary/ontechnology/download/>,, Dec. 31, 2003, 4 pages.
Li et al., "A Phonotactic Language model for Spoken Language Identification", Proceedings of the 43rd Annual Meeting of the ACL, Jun. 25, 2005, pp. 515-522.
Lieberman et al., "Out of Context: Computer Systems that Adapt to, and Learn from, Context", IBM Systems Journal, vol. 39, No. 3 & 4, 2000, pp. 617-632.
Lieberman, Henry, "A Multi-Scale, Multi-Layer, Translucent Virtual Space", Proceedings of IEEE Conference on Information Visualization, Aug. 1997, pp. 124-131.
Lieberman, Henry, "Powers of Ten Thousand: Navigating in Large Information Spaces", Proceedings of the ACM Symposium on User Interface Software and Technology, Nov. 1994, pp. 1-2.
Lin et al., "A Distributed Architecture for Cooperative Spoken Dialogue Agents with Coherent Dialogue State and History", Available on line at <http://citeseerx.ist.psu.edu/viewdoc/summary?doi=10.1.1.42.272>, 1999, 4 pages.
Lin et al., "A New Framework for Recognition of Mandarin Syllables with Tones Using Sub-syllabic Unites", IEEE International Conference on Acoustics, Speech and Signal Processing (ICASSP-93), Apr. 1993, 4 pages.
Linde et al., "An Algorithm for Vector Quantizer Design", IEEE Transactions on Communications, vol. 28, No. 1, Jan. 1980, 12 pages.
Liu et al., "Efficient Joint Compensation of Speech for the Effects of Additive Noise and Linear Filtering", IEEE International Conference of Acoustics, Speech and Signal Processing, ICASSP-92, Mar. 1992, 4 pages.
Logan et al., "Mel Frequency Cepstral Co-efficients for Music Modeling", International Symposium on Music Information Retrieval, 2000, 2 pages.
Lowerre, B. T., "The-Harpy Speech Recognition System", Doctoral Dissertation, Department of Computer Science, Carnegie Mellon University, Apr. 1976, 20 pages.
Lyon, R., "A Computational Model of Binaural Localization and Separation", Proceedings of IEEE International Conference on Acoustics, Speech and Signal Processing, Apr. 1983, pp. 1148-1151.
Lyons et al., "Augmenting Conversations Using Dual-Purpose Speech", Proceedings of the 17th Annual ACM Symposium on User interface Software and Technology, 2004, 10 pages.
Lyons, Richard F., "CCD Correlators for Auditory Models", Proceedings of the Twenty-Fifth Asilomar Conference on Signals, Systems and Computers, Nov. 4-6, 1991, pp. 785-789.
Macchi, Marian, "Issues in Text-to-Speech Synthesis" Proceedings of IEEE International Joint Symposia on Intelligence and Systems, May 21, 1998, pp. 318-325.
Mackenzie et al., "Alphanumeric Entry on Pen-Based Computers", International Journal of Human-Computer Studies, vol. 41, 1994, pp. 775-792.
Mackinlay et al., "The Perspective Wall: Detail and Context Smoothly Integrated", ACM, 1991, pp. 173-179.
Macsimum News, "Apple Files Patent for an Audio Interface for the iPod", available at <http://www.macsimumnews.com/index.php/archive/apple_files_patent_for_ an_ audio_ interface_ for_the_ipod>, retrieved on Jul. 13, 2006, 8 pages.
Mactech, "KeyStrokes 3.5 for Mac OS X Boosts Word Prediction", available at <http://www.mactech.com/news?p=1007129>, retrieved on Jan. 7, 2008, 3 pages.
Maghbouleh, Arman, "An Empirical Comparison of Automatic Decision Tree and Linear Regression Models for Vowel Durations", Revised Version of a Paper Presented at the Computational Phonology in Speech Technology Workshop, 1996 Annual Meeting of the Association for Computational Linguistics in Santa Cruz, California, 7 pages.
Mahedero et al., "Natural Language Processing of Lyrics", In Proceedings of the 13th Annual ACM International Conference on Multimedia, ACM, Nov. 6-11, 2005, 4 pages.
Mangu et al., "Finding Consensus in Speech Recognition: Word Error Minimization and Other Applications of Confusion Networks", Computer Speech and Language, vol. 14, No. 4, 2000, pp. 291-294.
Manning etal, "Foundations of Statistical Natural Language Processing", The MIT Press, Cambridge Massachusetts, 1999, pp. 10-11.
Marcus et al., "Building a Large Annotated Corpus of English: The Penn Treebank", Computational Linguistics, vol. 19, No. 2, 1993, pp. 313-330.
Markel et al., "Linear Prediction of Speech", Springer-Verlag, Berlin, Heidelberg, New York, 1976, 12 pages.
Markel et al., "Linear Production of Speech", Reviews, 1976, pp. xii, 288.
Martin et al., "Building and Using Practical Agent Applications", SRI International, PAAM Tutorial, 1998, 78 pages.
Martin et al., "Building Distributed Software Systems with the Open Agent Architecture", Proceedings of the Third International Conference on the Practical Application of Intelligent Agents and Multi-Agent Technology, Mar. 1998, pp. 355-376.
Martin et al., "Development Tools for the Open Agent Architecture", Proceedings of the International Conference on the Practical Application of Intelligent Agents and Multi-Agent Technology, Apr. 1996, pp. 1-17.
Martin et al., "Information Brokering in an Agent Architecture", Proceedings of the Second International Conference on the Practical Application of Intelligent Agents and Multi-Agent Technology, Apr. 1997, pp. 1-20.
Martin et al., "The Open Agent Architecture: A Framework for Building Distributed Software Systems", Applied Artificial Intelligence: An International Journal, vol. 13, No. 1-2, available at <http://adam.cheyer.com/papers/oaa.pdf> >, retrieved from internet on Jan.-Mar. 1999.
Martin et al., "Transportability and Generality in a Natural-Language Interface System", Proceedings of the Eighth International Joint Conference on Artificial Intelligence, Technical Note 293, Aug. 1983, 21 pages.
Martins et al., "Extracting and Exploring the Geo-Temporal Semantics of Textual Resources", Semantic Computing, IEEE International Conference, 2008, pp. 1-9.
Masui, Toshiyuki, "POBox: An Efficient Text Input Method for Handheld and Ubiquitous Computers", Proceedings of the 1st International Symposium on Handheld and Ubiquitous Computing, 1999, 12 pages.
Matiasek et al., "Tamic-P: A System for NL Access to Social Insurance Database", 4th International Conference on Applications of Natural Language to Information Systems, Jun. 1999, 7 pages.
Matsui et al., "Speaker Adaptation of Tied-Mixture-Based Phoneme Models for Text-Prompted Speaker Recognition", 1994 IEEE International Conference on Acoustics, Speech and Signal Processing, Apr. 19-22, 1994, 1-125-1-128.

(56) **References Cited**

OTHER PUBLICATIONS

Matsuzawa, A, "Low-Voltage and Low-Power Circuit Design for Mixed Analog/Digital Systems in Portable Equipment", IEEE Journal of Solid-State Circuits, vol. 29, No. 4, 1994, pp. 470-480.
McGuire et al., "SHADE: Technology for Knowledge-Based Collaborative Engineering", Journal of Concurrent Engineering Applications and Research (CERA), 1993, 18 pages.
Meet Ivee, Your Wi-Fi Voice Activated Assistant, available at <http://www.helloivee.com/>, retrieved on Feb. 10, 2014, 8 pages.
Mel Scale, Wikipedia the Free Encyclopedia, Last modified on Oct. 13, 2009 and retrieved on Jul. 28, 2010, available at <http://en.wikipedia.org/wiki/Mel_scale>, 2 pages.
Mellinger, David K., "Feature-Map Methods for Extracting Sound Frequency Modulation", IEEE Computer Society Press, 1991, pp. 795-799.
Meng et al., "Generating Phonetic Cognates to Handle Named Entities in English-Chinese Cross-Language Spoken Document Retrieval", Automatic Speech Recognition and Understanding, Dec. 2001, pp. 311-314.
Meng et al., "Wheels: A Conversational System in the Automobile Classified Domain", Proceedings of Fourth International Conference on Spoken Language, ICSLP 96, vol. 1, Oct. 1996, 4 pages.
Menico, Costas, "Faster String Searches", Dr. Dobb's Journal, vol. 14, No. 7, Jul. 1989, pp. 74-77.
Menta, Richard, "1200 Song MP3 Portable is a Milestone Player", available at <http://www.mp3newswire.net/stories/personaljuke.html>, Jan. 11, 2000, 4 pages.
Merlin et al., "Non Directly Acoustic Process for Costless Speaker Recognition and Indexation", International Workshop on Intelligent Communication Technologies and Applications, Jan. 1, 1999, 5 pages.
Meyer, Mike, "A Shell for Modern Personal Computers", University of California, Aug. 1987, pp. 13-19.
Meyrowitz et al., "Bruwin: An Adaptable Design Strategy for Window Manager/Virtual Terminal Systems", Department of Computer Science, Brown University, 1981, pp. 180-189.
Miastkowski, Stan, "paperWorks Makes Paper Intelligent", Byte Magazine, Jun. 1992.
Michos et al., "Towards an Adaptive Natural Language Interface to Command Languages", Natural Language Engineering, vol. 2, No. 3, 1996, pp. 191-209.
Microsoft Corporation, "Microsoft MS-DOS Operating System User's Guide", Microsoft Corporation, 1982, pp. 4-1 to 4-16, 5-1 to 5-19.
Microsoft Corporation, Microsoft Office Word 2003 (SP2), Microsoft Corporation, SP3 as of 2005, pages MSWord 2003 Figures 1-5, 1983-2003.
Microsoft Press, "Microsoft Windows User's Guide for the Windows Graphical Environment", version 3.0, 1985-1990, pp. 33-41 & 70-74.
Microsoft Windows XP, "Magnifier Utility", Oct. 25, 2001, 2 pages.
Microsoft Word 2000 Microsoft Corporation, pages MSWord Figures 1-5, 1999.
Microsoft, "Turn on and Use Magnifier", available at <http://www.microsoft.com/windowsxp/using/accessibility/magnifierturnon.mspx>, retrieved on Jun. 6, 2009.
Microsoft/Ford, "Basic Sync Commands", www.SyncMyRide.com, Sep. 14, 2007, 1 page.
Miller, Chance, "Google Keyboard Updated with New Personalized Suggestions Feature", available at <http://9to5google,com/2014/03/19/google-keyboard-updated-with-new-personalized-suggestions-feature/>, Mar. 19, 2014, 4 pages.
Milner, N. P., "A Review of Human Performance and Preferences with Different Input Devices to Computer Systems", Proceedings of the Fourth Conference of the British Computer Society on People and Computers, Sep. 5-9, 1988, pp. 341-352.
Milstead et al., "Metadata: Cataloging by Any Other Name", available at <http://www.iicm.tugraz.at/thesis/cguetl_diss/literatur/Kapitel06/References/Milstead_et_al._1999/metadata.html>, Jan. 1999, 18 pages.
Milward et al., "D2.2: Dynamic Multimodal Interface Reconfiguration, Talk and Look: Tools for Ambient Linguistic Knowledge", available at <http://www.ihmc.us/users/nblaylock!Pubs/Files/talkd2.2.pdf>, Aug. 8, 2006, 69 pages.
Miniman, Jared, "Applian Software's Replay Radio and Player v1.02", pocketnow.com—Review, available at <http://www.pocketnow.com/reviews/replay/replay.htm>, Jul. 31, 2001, 16 pages.
Minimum Phase, Wikipedia the free Encyclopedia, Last modified on Jan. 12, 2010 and retrieved on Jul. 28, 2010, available at <http://en.wikipedia.org/wiki/Minimum_phase>, 8 pages.
Minker et al., "Hidden Understanding Models for Machine Translation", Proceedings of ETRW on Interactive Dialogue in Multi-Modal Systems, Jun. 1999, pp. 1-4.
Mitra et al., "A Graph-Oriented Model for Articulation of Ontology Interdependencies", Advances in Database Technology, Lecture Notes in Computer Science, vol. 1777, 2000, pp. 1-15.
Moberg et al., "Cross-Lingual Phoneme Mapping for Multilingual Synthesis Systems", Proceedings of the 8th International Conference on Spoken Language Processing, Jeju Island, Korea, INTERSPEECH 2004, Oct. 4-8, 2004, 4 pages.
Moberg, M., "Contributions to Multilingual Low-Footprint TTS System for Hand-Held Devices", Doctoral Thesis, Tampere University of Technology, Aug. 17, 2007, 82 pages.
Mobile Speech Solutions, Mobile Accessibility, SVOX AG Product Information Sheet, available at <http://www.svox.com/site/bra840604/con782768/mob965831936.aSQ?osLang=1>, Sep. 27, 2012, 1 page.
Mobile Tech News, "T9 Text Input Software Updated", available at <http://www.mobiletechnews.com/info/2004/11/23/122155.html>, Nov. 23, 2004, 4 pages.
Modi et al., "CMRadar: A Personal Assistant Agent for Calendar Management", AAAI, Intelligent Systems Demonstrations, 2004, pp. 1020-1021.
Mok et al., "Media Searching on Mobile Devices", IEEE EIT 2007 Proceedings, 2007, pp. 126-129.
Moore et al., "Combining Linguistic and Statistical Knowledge Sources in Natural-Language Processing for ATIS", SRI International, Artificial Intelliqence Center, 1995, 4 pages.
Moore et al., "SRI's Experience with the ATIS Evaluation", Proceedings of the Workshop on Speech and Natural Language, Jun. 1990, pp. 147-148.
Moore et al., "The Information Warfare Advisor: An Architecture for Interacting with Intelligent Agents Across the Web", Proceedings of Americas Conference on Information Systems (AMCIS), Dec. 31, 1998, pp. 186-188.
Moore, Robert C., "Handling Complex Queries in a Distributed Data Base", SRI International, Technical Note 170, Oct. 8, 1979, 38 pages.
Moore, Robert C., "Practical Natural-Language Processing by Computer", SRI International, Technical Note 251, Oct. 1981, 34 pages.
Moore, Robert C., "The Role of Logic in Knowledge Representation and Commonsense Reasoning", SRI International, Technical Note 264, Jun. 1982, 19 pages.
Moore, Robert C., "Using Natural-Language Knowledge Sources in Speech Recognition", SRI International, Artificial Intelligence Center, Jan. 1999, pp. 1-24.
Moran et al., "Intelligent Agent-Based User Interfaces", Proceedings of International Workshop on Human Interface Technology, Oct. 1995, pp. 1-4.
Moran et al., "Multimodal User Interfaces in the Open Agent Architecture", International Conference on Intelligent User Interfaces (IUI97), 1997, 8 pages.
Moran, Douglas B., "Quantifier Scoping in the SRI Core Language Engine", Proceedings of the 26th Annual Meeting on Association for Computational Linguistics, 1988, pp. 33-40.
Morgan, B., "Business Objects (Business Objects for Windows) Business Objects Inc.", DBMS, vol. 5, No. 10, Sep. 1992, 3 pages.
Morland, D. V., "Human Factors Guidelines for Terminal Interface Design", Communications ofthe ACM vol. 26, No. 7, Jul. 1983, pp. 484-494.

(56) **References Cited**

OTHER PUBLICATIONS

Morris et al., "Andrew: A Distributed Personal Computing Environment", Communications of the ACM, (Mar. 1986); vol. 29 No. 3,, Mar. 1986, pp. 184-201.
Morton, Philip, "Checking If an Element Is Hidden", StackOverflow, Available at <http://stackoverflow.com/questions/178325/checking-if-an-element-is-hidden>, Oct. 7, 2008, 12 pages.
Motro, Amihai, "Flex: A Tolerant and Cooperative User Interface to Databases", IEEE Transactions on Knowledge and Data Engineering, vol. 2, No. 2, Jun. 1990, pp. 231-246.
Mountford et al., "Talking and Listening to Computers", The Art of Human-Computer Interface Design, Apple Computer, Inc., Addison-Wesley Publishing Company, Inc., 1990, 17 pages.
Mozer, Michael C., "An Intelligent Environment must be Adaptive", IEEE Intelligent Systems, 1999, pp. 11-13.
Muller et al., "CSCW'92 Demonstrations", 1992, pp. 11-14.
Murty et al., "Combining Evidence from Residual Phase and MFCC Features for Speaker Recognition", IEEE Signal Processing Letters, vol. 13, No. 1, Jan. 2006, 4 pages.
Murveit et al., "Integrating Natural Language Constraints into HMM-Based Speech Recognition", International Conference on Acoustics, Speech and Signal Processing, Apr. 1990, 5 pages.
Murveit et al., "Speech Recognition in SRI's Resource Management and ATIS Systems", Proceedings of the Workshop on Speech and Natural Language, 1991, pp. 94-100.
Musicmatch, "Musicmatch and Xing Technology Introduce Musicmatch Jukebox", Press Releases, available at <http://www.musicmatch.com/info/company/press/releases/?year=1998&release=2>, May 18, 1998, 2 pages.
Muthesamy et al., "Speaker-Independent Vowel Recognition: Spectograms versus Cochleagrams", IEEE, Apr. 1990.
My Cool Aids, "What's New", available at <http://www.mycoolaids.com/>, 2012, 1 page.
Myers, Brad A., "Shortcutter for Palm", available at <http://www.cs.cmu.edu/~pebbles/v5/shortcutter/palm/index.html>, retrieved on Jun. 18, 2014, 10 pages.
N200 Hands-Free Bluetooth Car Kit, available at <www.wirelessground.com>, retrieved on Mar. 19, 2007, 3 pages.
Nadoli et al., "Intelligent Agents in the Simulation of Manufacturing Systems", Proceedings of the SCS Multiconference on AI and Simulation, 1989, 1 page.
Nakagawa et al., "Speaker Recognition by Combining MFCC and Phase Information", IEEE International Conference on Acoustics, Speech and Signal Processing (ICASSP), Mar. 2010, 4 pages.
Nakagawa et al., "Unknown Word Guessing and Part-of-Speech Tagging Using Support Vector Machines", Proceedings of the 6th NLPRS, 2001, pp. 325-331.
Naone, Erica, "TR10: Intelligent Software Assistant", Technology Review, Mar.-Apr. 2009, 2 pages.
Navigli, Roberto, "Word Sense Disambiguation: A Survey", ACM Computing Surveys, vol. 41, No. 2, Feb. 2009, 70 pages.
NCIP Staff, "Magnification Technology", available at <http://www2.edc.org/ncip/library/vi/magnifi.htm>, 1994, 6 pages.
NCIP, "NCIP Library: Word Prediction Collection", available at <http://www2.edc.org/ncip/library/wp/toc.htm>, 1998, 4 pages.
NCIP, "What is Word Prediction?", available at <http://www2.edc.org/NCIP/library/wp/what_is.htm>, 1998, 2 pages.
NDTV, "Sony SmartWatch 2 Launched in India for Rs. 14,990", available at <http://gadgets.ndtv.com/others/news/sony-smartwatch-2-launched-in-india-for-rs-14990-420319>, Sep. 18, 2013, 4 pages.
Neches et al., "Enabling Technology for Knowledge Sharing", Fall, 1991, pp. 37-56.
Newton, Harry, "Newton's Telecom Dictionary", Mar. 1998, pp. 62, 155, 610-611, 771.
Ng, Simon, "Google's Task List Now Comes to Iphone", SimonBlog, Available at <http://www.simonblog.com/2009/02/04/googles-task-list-now-comes-to-iphone/>, Feb. 4, 2009, 33 pages.
Nguyen et al., "Generic Manager for Spoken Dialogue Systems", In DiaBruck: 7th Workshop on the Semantics and Pragmatics of Dialogue, Proceedings, 2003, 2 pages.
Niesler et al., "A Variable-Length Category-Based N-Gram Language Model", IEEE International Conference on Acoustics, Speech and Signal Processing (ICASSP'96), vol. 1, May 1996, 6 pages.
Nilsson, B. A., "Microsoft Publisher is an Honorable Start for DTP Beginners", Computer Shopper, Feb. 1, 1992, 2 pages.
Noik, Emanuel G., "Layout-Independent Fisheye Views of Nested Graphs", IEEE Proceedings of Symposium on Visual Languages, 1993, 6 pages.
Nonhoff-Arps et al., "StraBenmusik: Portable MP3-Spieler mit USB Anschluss", CT Magazin Fuer Computer Technik, Verlag Heinz Heise GMBH, Hannover DE, No. 25, 2000, pp. 166-175.
Northern Telecom, "Meridian Mail PC User Guide", 1988, 17 Pages.
Notenboom, Leo A., "Can I Retrieve Old MSN Messenger Conversations?", available at <http://ask-leo.com/can_i_retrieve_old_msn_messenger_conversations.html>, Mar. 11, 2004, 23 pages.
Noth et al., "Verbmobil: The Use of Prosody in the Linguistic Components of a Speech Understanding System", IEEE Transactions on Speech and Audio Processing, vol. 8, No. 5, Sep. 2000, pp. 519-532.
O'Connor, Rory J., "Apple Banking on Newton's Brain", San Jose Mercury News, Apr. 22, 1991.
Odubiyi et al., "SAIRE-A Scalable Agent-Based Information Retrieval Engine", Proceedings of the First International Conference on Autonomous Agents, 1997, 12 pages.
Ohsawa et al., "A computational Model of an Intelligent Agent Who Talks with a Person", Research Reports on Information Sciences, Series C, No. 92, Apr. 1989, pp. 1-18.
Ohtomo et al., "Two-Stage Recognition Method of Hand-Written Chinese Characters Using an Integrated Neural Network Model", Denshi Joohoo Tsuushin Gakkai Ronbunshi, D-II, vol. J74, Feb. 1991, pp. 158-165.
Okazaki et al., "Multi-Fisheye Transformation Method for Large-Scale Network Maps", IEEE Japan, vol. 44, No. 6, 1995, pp. 495-500.
Omologo et al., "Microphone Array Based Speech Recognition with Different Talker-Array Positions", IEEE International Conference on Acoustics, Speech, and Signal Processing, vol. 1, Apr. 21-24, 1997, pp. 227-230.
Oregon Scientific, "512MB Waterproof MP3 Player with FM Radio & Built-in Pedometer", available at <http://www2.oregonscientific.com/shop/product.asp?cid=4&scid=11&pid=581>, retrieved on Jul. 31, 2006, 2 pages.
Oregon Scientific, "Waterproof Music Player with FM Radio and Pedometer (MP121)—User Manual", 2005, 24 pages.
Osxdaily, "Get a List of Siri Commands Directly from Siri", Available at <http://osxdaily.com/2013/02/05/list-siri-commands/>, Feb. 5, 2013, 15 pages.
Owei et al., "Natural Language Query Filtration in the Conceptual Query Language", IEEE, 1997, pp. 539-549.
Padilla, Alfredo, "Palm Treo 750 Cell Phone Review—Messaging", available at <http://www.wirelessinfo.com/content/palm-Treo-750-Cell-Phone-Review/Messaging,htm>, Mar. 17, 2007, 6 pages.
Palay et al., "The Andrew Toolkit: An Overview", Information Technology Center, Carnegie-Mellon University, 1988, pp. 1-15.
Palm, Inc., "User Guide: Your Palm® Treo.TM. 755p Smartphone", 2005-2007, 304 pages.
Pan et al., "Natural Language Aided Visual Query Building for Complex Data Access", In proceeding of: Proceedings of the Twenty-Second Conference on Innovative Applications of Artificial Intelligence, XP055114607, Jul. 11, 2010.
Panasonic, "Toughbook 28: Powerful, Rugged and Wireless"Panasonic: Toughbook Models, available at <http://www.panasonic.com/computer/notebook/html/01a_s8.htm>, retrieved on Dec. 19, 2002, 3 pages.
Pannu et al., "A Learning Personal Agent for Text Filtering and Notification", Proceedings of the International Conference of Knowledge Based Systems, 1996, pp. 1-11.

(56) **References Cited**

OTHER PUBLICATIONS

Papadimitriou et al., "Latent Semantic Indexing: A Probabilistic Analysis", Available online at <http://citeseerx.ist.psu.edu/messaqes/downloadsexceeded.html>, Nov. 14, 1997, 21 pages.
Parks et al., "Classification of Whale and Ice Sounds with a cochlear Model", IEEE, Mar. 1992.
Parson, T. W., "Voice and Speech Processing", Pitch and Formant Estimation, McGraw-Hill, Inc., ISBN: 0-07-0485541-0, 1987, 15 pages.
Parsons, T. W., "Voice and Speech Processing", Linguistics and Technical Fundamentals, Articulatory Phonetics and Phonemics, McGraw-Hill, Inc., ISBN: 0-07-0485541-0, 1987, 5 pages.
Patent Abstracts of Japan, vol. 014, No. 273 (E-0940)Jun. 13, 1990 (Jun. 13, 1990) -& JP 02 086057 A (Japan Storage Battery Co Ltd), Mar. 27, 1990 (Mar. 27, 1990).
Pathak et al., "Privacy-preserving Speech Processing: Cryptographic and String-matching Frameworks Show Promise", In: IEEE signal processing magazine, retrieved from <http://www.merl.com/publications/docs/TR2013-063.pdf>, Feb. 13, 2013, 16 pages.
Patterson et al., "Rendezvous: An Architecture for Synchronous Multi-User Applications", CSCW '90 Proceedings, 1990, pp. 317-328.
Pearl, Amy, "System Support for integrated Desktop Video Conferencing", Sunmicrosystems Laboratories, Dec. 1992, pp. 1-15.
Penn et al., "Ale for Speech: A Translation Prototype", Bell Laboratories, 1999, 4 pages.
Pereira, Fernando, "Logic for Natural Language Analysis", SRI International, Technical Note 275, Jan. 1983, 194 pages.
Perrault et al., "Natural-Language Interfaces", SRI International, Technical Note 393, Aug. 22, 1986, 48 pages.
PhatNoise, Voice Index on Tap, Kenwood Music Keg, available at <http://www.phatnoise.com/kenwood/kenwoodssamail.html>, retrieved on Jul. 13, 2006, 1 page.
Phillipps, Ben, "Touchscreens are Changing the Face of Computers—Today's Users Have Five Types of Touchscreens to Choose from, Each with its Own Unique Characteristics", Electronic Products, Nov. 1994, pp. 63-70.
Phillips, Dick, "The Multi-Media Workstation", SIGGRAPH '89 Panel Proceedings, 1989, pp. 93-109.
Phoenix Solutions, Inc., "Declaration of Christopher Schmandt Regarding the MIT Galaxy System", West Interactive Corp., A Delaware Corporation, Document 40, Jul. 2, 2010, 162 pages.
Pickering, J. A., "Touch-Sensitive Screens: The Technologies and Their Application", International Journal of Man-Machine Studies, vol. 25, No. 3, Sep. 1986, pp. 249-269.
Picone, J., "Continuous Speech Recognition using Hidden Markov Models", IEEE ASSP Magazine, vol. 7, No. 3, Jul. 1990, 16 pages.
Pingali et al., "Audio-Visual Tracking for Natural Interactivity", ACM Multimedia, Oct. 1999, pp. 373-382.
Plaisant et al., "Touchscreen Interfaces for Alphanumeric Data Entry", Proceedings of the Human Factors and Ergonomics Society 36th Annual Meeting, 1992, pp. 293-297.
Plaisant et al., "Touchscreen Toggle Design", CHI'92, May 3-7, 1992, pp. 667-668.
Pollock, Stephen, "A Rule-Based Message Filtering System", Published in: Journal, ACM Transactions on Information Systems (TOIS), vol. 6, Issue 3, Jul. 1988, pp. 232-254.
Poly-Optical Products, Inc., "Poly-Optical Fiber Optic Membrane Switch Backlighting", available at <http://www.poly-optical.com/membrane_switches.html>, retrieved on Dec. 19, 2002, 3 pages.
Poor, Alfred, "Microsoft Publisher", PC Magazine, vol. 10, No. 20, Nov. 26, 1991, 1 page.
Potter et al., "An Experimental Evaluation of Three Touch Screen Strategies within a Hypertext Database", International Journal of Human-Computer Interaction, vol. 1, No. 1, 1989, pp. 41-52.
Potter et al., "Improving the Accuracy of Touch Screens: An Experimental Evaluation of Three Strategies", CHI '88 ACM, 1988, pp. 27-32.
Powell, Josh, "Now You See Me . . . Show/Hide Performance", available at http://www.learningjquery.com/2010/05/now-you-see-me-showhide-performance, May 4, 2010.
Public Safety Technologies, "Tracer 2000 Computer", available at <http://www.pst911.com/tracer.html>, retrieved on Dec. 19, 2002, 3 pages.
Pulman et al., "Clare: A Combined Language and Reasoning Engine", Proceedings of JFIT Conference, available at <http://www.cam.sri.com/tr/crc042/paper.ps.Z>, 1993, 8 pages.
Quazza et al., "Actor: A Multilingual Unit-Selection Speech Synthesis System", Proceedings of 4th ISCA Tutorial and Research Workshop on Speech Synthesis, Jan. 1, 2001, 6 pages.
Quick Search Algorithm, Communications of the ACM, 33(8), 1990, pp. 132-142.
Rabiner et al., "Digital Processing of Speech Signals", Prentice Hall, 1978, pp. 274-277.
Rabiner et al., "Fundamental of Speech Recognition", AT&T, Published by Prentice-Hall, Inc., ISBN: 0-13-285826-6, 1993, 17 pages.
Rabiner et al., "Note on the Properties of a Vector Quantizer for LPC Coefficients", Bell System Technical Journal, vol. 62, No. 8, Oct. 1983, 9 pages.
Rampe et al., "SmartForm Designer and SmartForm Assistant", News release, Claris Corp., Jan. 9, 1989, 1 page.
Rao et al., "Exploring Large Tables with the Table Lens", Apple Inc., Video Clip, Xerox Corp., on a CD, 1994.
Rao et al., "Exploring Large Tables with the Table Lens", CHI'95 Mosaic of Creativity, ACM, May 7-11, 1995, pp. 403-404.
Rao et al., "The Table Lens: Merging Graphical and Symbolic Representations in an Interactive Focus+Context Visualization for Tabular Information", Proceedings of the ACM SIGCHI Conference on Human Factors in Computing Systems, Apr. 1994, pp. 1-7.
Raper, Larry K.,"The C-MU PC Server Project", (CMU-ITC-86-051), Dec. 1986, pp. 1-30.
Ratcliffe et al., "Intelligent Agents Take U.S. Bows", MacWeek, vol. 6, No. 9, Mar. 2, 1992, 1 page.
Ratcliffe, M., "ClearAccess 2.0 Allows SQL Searches Off-Line (Structured Query Language) (ClearAccess Corp. Preparing New Version of Data-Access Application with Simplified User Interface, New Features) (Product Announcement)", MacWeek, vol. 6, No. 41, Nov. 16, 1992, 2 pages.
Ravishankar, Mosur K., "Efficient Algorithms for Speech Recognition", Doctoral Thesis Submitted to School of Computer Science, Computer Science Division, Carnegie Mellon University, Pittsburgh, May 15, 1996, 146 pages.
Rayner et al., "Adapting the Core Language Engine to French and Spanish", Cornell University Library, available at <http:l/arxiv.org/abs/cmp-lg/9605015>, May 10, 1996, 9 pages.
Rayner et al., "Deriving Database Queries from Logical Forms by Abductive Definition Expansion", Proceedings of the Third Conference on Applied Natural Language Processing, ANLC, 1992, 8 pages.
Rayner et al., "Spoken Language Translation with Mid-90's Technology: A Case Study", Eurospeech, ISCA, Available online at <http://citeseerx.ist.psu.edu/viewdoc/summary?doi=10.1.1.54.8608>, 1993, 4 pages.
Rayner, M., "Abductive Equivalential Translation and its Application to Natural Language Database Interfacing", Dissertation Paper, SRI International, Sep. 1993, 162 pages.
Rayner, Manny, "Linguistic Domain Theories: Natural-Language Database Interfacing from First Principles", SRI International, Cambridge, 1993, 11 pages.
Reddi, "The Parser".
Reddy, D. R., "Speech Recognition by Machine: A Review", Proceedings of the IEEE, Apr. 1976, pp. 501-531.
Reininger et al., "Speech and Speaker Independent Codebook Design in VQ Coding Schemes", (Proceedings of the IEEE International Acoustics, Speech and Signal Processing Conference, Mar. 1985), as reprinted in Vector Quantization (IEEE Press, 1990), 1990, pp. 271-273.
Remde et al., "SuperBook: An Automatic Tool for Information Exploration-Hypertext?", In Proceedings of Hypertext, 87 Papers, Nov. 1987, 14 pages.

(56) **References Cited**

OTHER PUBLICATIONS

Ren et al., "Efficient Strategies for Selecting Small Targets on Pen-Based Systems: An Evaluation Experiment for Selection Strategies and Strategy Classifications", Proceedings of the IFIP TC2/TC13 WG2.7/WG13.4 Seventh Working Conference on Engineering for Human-Computer Interaction, vol. 150, 1998, pp. 19-37.
Ren et al., "Improving Selection Performance on Pen-Based Systems: A Study of Pen-Based Interaction for Selection Tasks", ACM Transactions on Computer-Human Interaction, vol. 7, No. 3, Sep. 2000, pp. 384-416.
Ren et al., "The Best among Six Strategies for Selecting a Minute Target and the Determination of the Minute Maximum Size of the Targets on a Pen-Based Computer", Human-Computer Interaction INTERACT, 1997, pp. 85-92.
Reynolds, C. F., "On-Line Reviews: A New Application of the HICOM Conferencing System", IEEE Colloquium on Human Factors in Electronic Mail and Conferencing Systems, Feb. 3, 1989, 4 pages.
Rice et al., "Monthly Program: Nov. 14, 1995", The San Francisco Bay Area Chapter of ACM SIGCHI, available at <http://www.baychi.org/calendar/19951114>, Nov. 14, 1995, 2 pages.
Rice et al., "Using the Web Instead of a Window System", Proceedings of the SIGCHI Conference on Human Factors in Computing Systems, CHI'96, 1996, pp. 1-14.
Ricker, Thomas, "Apple Patents Audio User Interface", Engadget, available at <http://www.engadget.com/2006/05/04/apple-patents-audio-user-interface/>, May 4, 2006, 6 pages.
Riecken, R D., "Adaptive Direct Manipulation",IEEE Xplore, 1991, pp. 1115-1120.
Rigoll, G., "Speaker Adaptation for Large Vocabulary Speech Recognition Systems Using Speaker Markov Models", International Conference on Acoustics, Speech and Signal Processing (ICASSP'89), May 1989, 4 pages.
Riley, M D., "Tree-Based Modelling of Segmental Durations", Talking Machines Theories, Models and Designs, Elsevier Science Publishers B.V., North-Holland, ISBN: 08-444-89115.3, 1992, 15 pages.
Rioport, "Rio 500: Getting Started Guide", available at <http://ec1.images-amazon.com/media/i3d/01/A/man-migrate/MANUAL000023453.pdf>, 1999, 2 pages.
Rivlin et al., "Maestro: Conductor of Multimedia Analysis Technologies", SRI International, 1999, 7 pages.
Rivoira et al., "Syntax and Semantics in a Word-Sequence Recognition System", IEEE International Conference on Acoustics, Speech and Signal Processing (ICASSP'79), Apr. 1979, 5 pages.
Robbin et al., "MP3 Player and Encoder for Macintosh!", SoundJam MP Plus, Version 2.0, 2000, 76 pages.
Robertson et al., "Information Visualization Using 3D Interactive Animation", Communications of the ACM, vol. 36, No. 4, Apr. 1993, pp. 57-71.
Robertson et al., "The Document Lens", UIST '93, Nov. 3-5, 1993, pp. 101-108.
Roddy et al., "Communication and Collaboration in a Landscape of B2B eMarketplaces", VerticalNet Solutions, White Paper, Jun. 15, 2000, 23 pages.
Roddy et al., "Interface Issues in Text Based Chat Rooms", SIGCHI Bulletin, vol. 30, No. 2, Apr. 1998, pp. 119-123.
Root, Robert, "Design of a Multi-Media Vehicle far Social Browsing", Bell Communications Research, 1988, pp. 25-38.
Rose et al., "Inside Macintosh", vols. I, II, and III, Addison-Wesley Publishing Company, Inc., Jul. 1988, 1284 pages.
Roseberry, Catherine, "How to Pair a Bluetooth Headset & Cell Phone", available at <http://mobileoffice.about.com/od/usingyourphone/ht/blueheadset_p.htm>, retrieved on Apr. 29, 2006, 2 pages.
Rosenberg et al., "An Overview of the Andrew Message System", Information Technology Center Carnegie-Mellon University, Jul. 1987, pp. 99-108.
Rosenfeld, R., "A Maximum Entropy Approach to Adaptive Statistical Language Modelling", Computer Speech and Language, vol. 10, No. 3, Jul. 1996, 25 pages.
Rosner et al., "In Touch: A Graphical User Interface Development Tool", IEEE Colloquium on Software Tools for Interface Design, Nov. 8, 1990, pp. 12/1-12/7.
Rossfrank, "Konstenlose Sprachmitteilungins Festnetz", XP002234425, Dec. 10, 2000, pp. 1-4.
Roszkiewicz, A., "Extending your Apple", Back Talk-Lip Service, A+ Magazine, The Independent Guide for Apple Computing, vol. 2, No. 2, Feb. 1984, 5 pages.
Roucos et al., "A Segment Vocoder at 150 B/S", (Proceedings of the IEEE International Acoustics, Speech and Signal Processing Conference, Apr. 1983), as reprinted in Vector Quantization (IEEE Press, 1990), 1990, pp. 246-249.
Roucos et al., "High Quality Time-Scale Modification for Speech", Proceedings of the 1985 IEEE Conference on Acoustics, Speech and Signal Processing, 1985, pp. 493-496.
Rubine, Dean Harris, "Combining Gestures and Direct Manipulation", CHI '92, May 3-7, 1992, pp. 659-660.
Rubine, Dean Harris, "The Automatic Recognition of Gestures", CMU-CS-91-202, Thesis Submitted in Partial Fulfillment of the Requirements for the Degree of Doctor of Philosophy in Computer Science at Carnegie Mellon University, Dec. 1991, 285 pages.
Ruch et al., "Using Lexical Disambiguation and Named-Entity Recognition to Improve Spelling Correction in the Electronic Patient Record", Artificial Intelligence in Medicine, Sep. 2003, pp. 169-184.
Rudnicky et al., "Creating Natural Dialogs in the Carnegie Mellon Communicator System", Proceedings of Eurospeech, vol. 4, 1999, pp. 1531-1534.
Russell et al., "Artificial Intelligence, A Modern Approach", Prentice Hall, Inc., 1995, 121 pages.
Russo et al., "Urgency is a Non-Monotonic Function of Pulse Rate", Journal of the Acoustical Society of America, vol. 122, No. 5, 2007, 6 pages.
Sabin et al., "Product Code Vector Quantizers for Waveform and Voice Coding", (IEEE Transactions on Acoustics, Speech and Signal Processing, Jun. 1984), as reprinted in Vector Quantization (IEEE Press, 1990), 1990, pp. 274-288.
Sacerdoti et al., "A Ladder User's Guide (Revised)", SRI International Artificial Intelligence Center, Mar. 1980, 39 pages.
Sagalowicz, D., "AD-Ladder User's Guide", SRI International, Sep. 1980, 42 pages.
Sakoe et al., "Dynamic Programming Algorithm Optimization for Spoken Word Recognition", IEEE Transactions on Acoustics, Speech and Signal Processing, vol. ASSP-26, No. 1, Feb. 1978, 8 pages.
Salton et al., "On the Application of Syntactic Methodologies in Automatic Text Analysis", Information Processing and Management, vol. 26, No. 1, Great Britain, 1990, 22 pages.
Sameshima et al., "Authorization with Security Attributes and Privilege Delegation Access control beyond the ACL", Computer Communications, vol. 20, 1997, 9 pages.
Sankar, Ananth, "Bayesian Model Combination (BAYCOM) for Improved Recognition", IEEE International Conference on Acoustics, Speech, and Signal Processing (ICASSP), Mar. 18-23, 2005, pp. 845-848.
San-Segundo et al., "Confidence Measures for Dialogue Management in the CU Communicator System", Proceedings of Acoustics, Speech and Signal Processing (ICASSP'00), Jun. 2000, 4 pages.
Santaholma, Marianne E., "Grammar Sharing Techniques for Rule-based Multilingual NLP Systems", Proceedings of the 16th Nordic Conference of Computational Linguistics, Nodalida 2007, May 25, 2007, 8 pages.
Santen, Jan P., "Assignment of Segmental Duration in Text-to-Speech Synthesis", Computer Speech and Language, vol. 8, No. 2, Apr. 1994, pp. 95-128.
Sarawagi, Sunita, "CRF Package Page", available at <http://crf.sourceforge.net/>, retrieved on Apr. 6, 2011, 2 pages.
Sarkar et al., "Graphical Fisheye Views of Graphs", CHI '92 Proceedings of the SIGCHI Conference on Human Factors in Computing Systems, May 3-7, 1992, pp. 83-91.

(56) **References Cited**

OTHER PUBLICATIONS

Sarkar et al., "Graphical Fisheye Views of Graphs", Systems Research Center, Digital Equipment Corporation,, Mar. 17, 1992, 31 pages.
Sarkar et al., "Graphical Fisheye Views", Communications of the ACM, vol. 37, No. 12, Dec. 1994, pp. 73-83.
Sarkar et al., "Stretching the Rubber Sheet: A Metaphor for Viewing Large Layouts on Small Screens", UIST'93, ACM, Nov. 3-5, 1993, pp. 81-91.
Sarvas et al., "Metadata Creation System for Mobile Images", Conference Proceedings, The Second International Conference on Mobile Systems, Applications and Services, Jun. 6, 2004, pp. 36-48.
Sastry, Ravindra W., "A Need for Speed: A New Speedometer for Runners", submitted to the Department of Electrical Engineering and Computer Science at the Massachusetts Institute of Technology, 1999, pp. 1-42.
Sato, H., "A Data Model, Knowledge Base and Natural Language Processing for Sharing a Large Statistical Database", Statistical and Scientific Database Management, Lecture Notes in Computer Science, vol. 339, 1989, 20 pages.
Savoy, J., "Searching Information in Hypertext Systems Using Multiple Sources of Evidence", International Journal of Man-Machine Studies, vol. 38, No. 6, Jun. 1996, 15 pages.
Scagliola, C., "Language Models and Search Algorithms for Real-Time Speech Recognition", International Journal of Man-Machine Studies, vol. 22, No. 5, 1985, 25 pages.
Schafer et al., "Digital Representations of Speech Signals", Proceedings of the IEEE, vol. 63, No. 4, Apr. 1975, pp. 662-677.
Schaffer et al., "Navigating Hierarchically Clustered Networks through Fisheye and Full-Zoom Methods", ACM Transactions on Computer-Human Interaction, vol. 3, No. 2, Jun. 1996, pp. 162-188.
Scheifler, R. W., "The X Window System", MIT Laboratory for Computer Science and Gettys, Jim Digital Equipment Corporation and MIT Project Athena; ACM Transactions on Graphics, vol. 5, No. 2, Apr. 1986, pp. 79-109.
Schluter et al., "Using Phase Spectrum Information for Improved Speech Recognition Performance", IEEE International Conference on Acoustics, Speech, and Signal Processing, 2001, pp. 133-136.
Schmandt et al., "A Conversational Telephone Messaging System", IEEE Transactions on Consumer Electronics, vol. CE-30, Aug. 1984, pp. xxi-xxiv.
Schmandt et al., "Augmenting a Window System with Speech Input", IEEE Computer Society, Computer, vol. 23, No. 8, Aug. 1990, 8 pages.
Schmandt et al., "Phone Slave: A Graphical Telecommunications Interface", Proceedings of the SID, vol. 26, No. 1, 1985, pp. 79-82.
Schmandt et al., "Phone Slave: A Graphical Telecommunications Interface", Society for Information Display, International Symposium Digest of Technical Papers, Jun. 1984, 4 pages.
Schmid, H., "Part-of-speech tagging with neural networks", Coling '94 Proceedings of the 15th conference on Computational linguistics—vol. 1, 1994, pp. 172-176.
Schnelle, Dirk, "Context Aware Voice User Interfaces for Workflow Support", Dissertation paper, Aug. 27, 2007, 254 pages.
Schone et al., "Knowledge-Free Induction of Morphology Using Latent Semantic Analysis", Proceedings of the 2nd Workshop on Learning Language in Logic and the 4th Conference on Computational Natural Language Learning, vol. 7, 2000, pp. 67-72.
Schooler et al., "A Packet-switched Multimedia Conferencing System", By Eve Schooler, et al; ACM SIGOIS Bulletin, vol. I, No. 1, Jan. 1989, pp. 12-22.
Schooler et al., "An Architecture for Multimedia Connection Management", Proceedings IEEE 4th Comsoc International Workshop on Multimedia Communications, Apr. 1992, pp. 271-274.
Schooler et al., "Multimedia Conferencing: Has it Come of Age?", Proceedings 24th Hawaii International Conference on System Sciences, vol. 3, Jan. 1991, pp. 707-716.
Schooler et al., "The Connection Control Protocol: Architecture Overview", USC/Information Sciences Institute, Jan. 28, 1992, pp. 1-6.
Schooler, Eve M., "Case Study: Multimedia Conference Control in a Packet-Switched Teleconferencing System", Journal of Internetworking: Research and Experience, vol. 4, No. 2, Jun. 1993, pp. 99-120.
Schooler, Eve M., "The Impact of Scaling on a Multimedia Connection Architecture", Multimedia Systems, vol. 1, No. 1, 1993, pp. 2-9.
Schooler, Eve, "A Distributed Architecture for Multimedia Conference Control", ISI Research Report, Nov. 1991, pp. 1-18.
Schultz, Tanja, "Speaker Characteristics", In: Speaker Classification I, retrieved from <http://ccc.inaoep.mx/~villasen/bib/Speaker %20Characteristics.pdf>, 2007, pp. 47-74.
Schütze, H., "Dimensions of Meaning", Proceedings of Supercomputing'92 Conference, Nov. 1992, 10 pages.
Schütze, H., "Distributional part-of-speech tagging", EACL '95 Proceedings of the seventh conference on European chapter of the Association for Computational Linguistics, 1995, pp. 141-148.
Schütze, Hinrich, "Part-of-speech induction from scratch", ACL '93 Proceedings of the 31st annual meeting on Association for Computational Linguistics, 1993, pp. 251-258.
Schwartz et al., "Context-Dependent Modeling for Acoustic-Phonetic Recognition of Continuous Speech", IEEE International Conference on Acoustics, Speech, and Signal Processing, vol. 10, Apr. 1985, pp. 1205-1208.
Schwartz et al., "Improved Hidden Markov Modeling of Phonemes for Continuous Speech Recognition", IEEE International Conference on Acoustics, Speech, and Signal Processing, vol. 9, 1984, pp. 21-24.
Schwartz et al., "The N-Best Algorithm: An Efficient and Exact Procedure for Finding the N Most Likely Sentence Hypotheses", IEEE, 1990, pp. 81-84.
Scott et al., "Designing Touch Screen Numeric Keypads: Effects of Finger Size, Key Size, and Key Spacing", Proceedings of the Human Factors and Ergonomics Society 41st Annual Meeting, Oct. 1997, pp. 360-364.
Seagrave, Jim, "A Faster Way to Search Text", EXE, vol. 5, No. 3, Aug. 1990, pp. 50-52.
Sears et al., "High Precision Touchscreens: Design Strategies and Comparisons with a Mouse", International Journal of Man-Machine Studies, vol. 34, No. 4, Apr. 1991, pp, 593-613.
Sears et al., "Investigating Touchscreen Typing: The Effect of Keyboard Size on Typing Speed", Behavior & Information Technology, vol. 12, No. 1, 1993, pp. 17-22.
Sears et al., "Touchscreen Keyboards", Apple Inc., Video Clip, Human-Computer Interaction Laboratory, on a CD, Apr. 1991.
Seide et al., "Improving Speech Understanding by Incorporating Database Constraints and Dialogue History", Proceedings of Fourth International Conference on Philadelphia, 1996, pp. 1017-1020.
Sen et al., "Indian Accent Text-to-Speech System for Web Browsing", Sadhana, vol. 27, No. 1, Feb. 2002, pp. 113-126.
Seneff et al., "A New Restaurant Guide Conversational System: Issues in Rapid Prototyping for Specialized Domains", Proceedings of Fourth International Conference on Spoken Language, vol. 2, 1996, 4 pages.
Sethy et al., "A Syllable Based Approach for Improved Recognition of Spoken Names", ITRW on Pronunciation Modeling and Lexicon Adaptation for Spoken language Technology (PMLA2002), Sep. 14-15, 2002, pp. 30-35.
Sharoff et al., "Register-Domain Separation as a Methodology for Development of Natural Language Interfaces to Databases", Proceedings of Human-Computer Interaction (INTERACT'99), 1999, 7 pages.
Sheth et al., "Evolving Agents for Personalized Information Filtering", Proceedings of the Ninth Conference on Artificial Intelligence for Applications, Mar. 1993, 9 pages.
Sheth et al., "Relationships at the Heart of Semantic Web: Modeling, Discovering, and Exploiting Complex Semantic Relationships", Enhancing the Power of the Internet: Studies in Fuzziness and Soft Computing, Oct. 13, 2002, pp. 1-38.
Shikano et al., "Speaker Adaptation through Vector Quantization", IEEE International Conference on Acoustics, Speech and Signal Processing (ICASSP'86), vol. 11, Apr. 1986, 4 pages.

(56) **References Cited**

OTHER PUBLICATIONS

Shimazu et al., "CAPIT: Natural Language Interface Design Tool with Keyword Analyzer and Case-Based Parser", NEG Research & Development, vol. 33, No. 4, Oct. 1992, 11 pages.
Shinkle, L., "Team User's Guide", SRI International, Artificial Intelligence Center, Nov. 1984, 78 pages.
Shiraki et al., "LPC Speech Coding Based on Variable-Length Segment Quantization", (IEEE Transactions on Acoustics, Speech and Signal Processing, Sep. 1988), as reprinted in Vector Quantization (IEEE Press, 1990), 1990, pp. 250-257.
Shklar et al., "InfoHarness: Use of Automatically Generated Metadata for Search and Retrieval of Heterogeneous Information", Proceedings of CAiSE'95, Finland, 1995, 14 pages.
Shneiderman, Ben, "Designing the User Interface: Strategies for Effective Human-Computer Interaction", Second Edition, 1992, 599 pages.
Shneiderman, Ben, "Designing the User Interface: Strategies for Effective Human-Computer Interaction", Third Edition, 1998, 669 pages.
Shneiderman, Ben, "Direct Manipulation for Comprehensible, Predictable and Controllable User Interfaces", Proceedings of the 2nd International Conference on Intelligent User Interfaces, 1997, pp. 33-39.
Shneiderman, Ben, "Sparks of Innovation in Human-Computer Interaction", 1993, (Table of Contents, Title Page, Ch. 4, Ch. 6 and List of References).
Shneiderman, Ben, "The Eyes Have It: A Task by Data Type Taxonomy for Information Visualizations", IEEE Proceedings of Symposium on Visual Languages, 1996, pp. 336-343.
Shneiderman, Ben, "Touch Screens Now Offer Compelling Uses", IEEE Software, Mar. 1991, pp. 93-94.
Shoham et al., "Efficient Bit and Allocation for an Arbitrary Set of Quantizers", (IEEE Transactions on Acoustics, Speech, and Signal Processing, Sep. 1988) as reprinted in Vector Quantization (IEEE Press, 1990), 1990, pp. 289-296.
Sigurdsson et al., "Mel Frequency Cepstral Co-efficients: An Evaluation of Robustness of MP3 Encoded Music", Proceedings of the 7th International Conference on Music Information Retrieval, 2006, 4 pages.
Silverman et al., "Using a Sigmoid Transformation for Improved Modeling of Phoneme Duration", Proceedings of the IEEE International Conference on Acoustics, Speech and Signal Processing, Mar. 1999, 5 pages.
Simkovitz, Daniel, "LP-DOS Magnifies the PC Screen", IEEE, 1992, pp. 203-204.
Simonite, Tom, "One Easy Way to Make Siri Smarter", Technology Review, Oct. 18, 2011, 2 pages.
Singh et al., "Automatic Generation of Phone Sets and Lexical Transcriptions", Acoustics, Speech and Signal Processing (ICASSP'00), 2000, 1 page.
Singh, N., "Unifying Heterogeneous Information Models", Communications of the ACM, 1998, 13 pages.
Sinitsyn, Alexander, "A Synchronization Framework for Personal Mobile Servers", Proceedings of the Second IEEE Annual Conference on Pervasive Computing and Communications Workshops, Piscataway, 2004, pp. 1, 3 and 5.
Slaney et al., "On the Importance of Time—A Temporal Representation of Sound", Visual Representation of Speech Signals, 1993, pp. 95-116.
Smeaton, Alan F., "Natural Language Processing and Information Retrieval", Information Processing and Management, vol. 26, No. 1, 1990, pp. 19-20.
Smith et al., "Guidelines for Designing User Interface Software", User Lab, Inc., Aug. 1986, pp. 1-384.
Smith et al., "Relating Distortion to Performance in Distortion Oriented Displays", Proceedings of Sixth Australian Conference on Computer-Human Interaction, Nov. 1996, pp. 6-11.
Sony Eiicsson Corporate, "Sony Ericsson to introduce Auto pairing. TM. to Improve Bluetooth.TM. Connectivity Between Headsets and Phones", Press Release, available at <http://www.sonyericsson.com/spg.jsp?cc=global&lc=en&ver=4001&template=pc3_1_1&z . . . >, Sep. 28, 2005, 2 pages.
Soong et al., "A High Quality Subband Speech Coder with Backward Adaptive Predictor and Optimal Time-Frequency Bit Assignment", (Proceedings of the IEEE International Acoustics, Speech, and Signal Processing Conference, Apr. 1986), as reprinted in Vector Quantization (IEEE Press, 1990), 1990, pp. 316-319.
Speaker Recognition, Wikipedia, The Free Enclyclopedia, Nov. 2, 2010, 4 pages.
Spiller, Karen, "Low-Decibel Earbuds Keep Noise at a Reasonable Level", available at <http://www.nashuatelegraph.com/apps/pbcs.dll/article?Date=20060813&Cate . . . >, Aug. 13, 2006, 3 pages.
SRI International, "The Open Agent Architecture TM 1.0 Distribution", Open Agent Architecture (OAA), 1999, 2 pages.
SRI, "SRI Speech: Products: Software Development Kits: EduSpeak", available at <http://web.archive.org/web/20090828084033/http://www.speechatsri.com/products/eduspeak>shtml, retrieved on Jun. 20, 2013, 2 pages.
Srihari, R. K.., "Use of Multimedia Input in Automated Image Annotation and Content-based Retrieval", Proceedings of Spie, International Society for Optical Engineering, vol. 2420, Feb. 9, 1995., pp. 249-260.
Srinivas et al., "Monet: A Multi-Media System for Conferencing and Application Sharing in Distributed Systems", CERC Technical Report Series Research Note, Feb. 1992.
Starr et al., "Knowledge-Intensive Query Processing", Proceedings of the 5th KRDB Workshop, Seattle, May 31, 1998, 6 pages.
Stealth Computer Corporation, "Peripherals for Industrial Keyboards & Pointing Devices", available at <http://www.stealthcomputer.com/peripherals_oem.htm>, retrieved on Dec. 19, 2002, 6 pages.
Steinberg, Gene, "Sonicblue Rio Car (10 GB, Reviewed: 6 GB)", available at <http://electronics.cnet.com/electronics/0-6342420-1304-4098389.htrnl>, Dec. 12, 2000, 2 pages.
Stent et al., "Geo-Centric Language Models for Local Business Voice Search", AT&T Labs—Research, 2009, pp. 389-396.
Stent et: al., "The CommandTalk Spoken Dialogue System", SRI International, 1999, pp. 183-190.
Stern et al., "Multiple Approaches to Robust Speech Recognition", Proceedings of Speech and Natural Language Workshop, 1992, 6 pages.
Stickel, Mark E., "A Nonclausal Connection-Graph Resolution Theorem-Proving Program", Proceedings of AAAI'82, 1982, 5 pages.
Stifleman, L., "Not Just Another Voice Mail System", Proceedings of 1991 Conference, American Voice, Atlanta GA, Sep. 24-26, 1991, pp. 21-26.
Stone et al., "The Movable Filter as a User Interface Tool", CHI '94 Human Factors in Computing Systems, 1994, pp. 306-312.
Strom et al., "Intelligent Barge-In in Conversational Systems", MIT laboratory for Computer Science, 2000, 4 pages.
Stuker et al., "Cross-System Adaptation and Combination for Continuous Speech Recognition: The Influence of Phoneme Set and Acoustic Front-End", Influence of Phoneme Set and Acoustic Front-End, Interspeech, Sep. 17-21, 2006, pp. 521-524.
Su et al., "A Review of ZoomText Xtra Screen Magnification Program for Windows 95", Journal of Visual Impairment & Blindness, Feb. 1998, pp. 116-119.
Su, Joseph C., "A Review of Telesensory's Vista PCI Screen Magnification System", Journal of Visual Impairment & Blindness, Oct. 1998, pp. 705, 707-710.
Sugumaran, V., "A Distributed Intelligent Agent-Based Spatial Decision Support System", Proceedings of the Americas Conference on Information systems (AMCIS), Dec. 31, 1998, 4 pages.
Sullivan, Danny, "How Google Instant's Autocomplete Suggestions Work", available at <http://searchengineland.com/how-google-instant-autocomplete-suggestions-work-62592>, Apr. 6, 2011, 12 pages.
Summerfield et al., "ASIC Implementation of the Lyon Cochlea Model", Proceedings of the 1992 International Conference on Acoustics, Speech and Signal Processing, IEEE, vol. V, 1992, pp. 673-676.

(56) **References Cited**

OTHER PUBLICATIONS

Sundaram et al., "Latent Perceptual Mapping with Data-Driven Variable-Length Acoustic Units for Template-Based Speech Recognition", ICASSP 2012, Mar. 2012, pp. 4125-4128.
Sycara et al., "Coordination of Multiple Intelligent Software Agents", International Journal of Cooperative Information Systems (IJCIS), vol. 5, No. 2 & 3, 1996, 31 pages.
Sycara et al., "Distributed Intelligent Agents", IEEE Expert, vol. 11, No. 6, Dec. 1996, 32 pages.
Sycara et al., "Dynamic Service Matchmaking among Agents in Open Information Environments", SIGMOD Record, 1999, 7 pages.
Sycara et al., "The RETSINA MAS Infrastructure", Autonomous Agents and Multi-Agent Systems, vol. 7, 2003, 20 pages.
T3 Magazine, "Creative MuVo TX 256MB", available at <http://www.t3.co.uk/reviews/entertainment/mp3_player/creative_muvo_tx_256mb>, Aug. 17, 2004, 1 page.
Taos, "Taos, Inc. Announces Industry's First Ambient Light Sensor to Convert Light Intensity to Digital Signals", News Release, available at <http://www.taosinc.com/presssrelease_090902.htm>, Sep. 16, 2002, 3 pages.
Taylor et al., "Speech Synthesis by Phonological Structure Matching", International Speech Communication Association, vol. 2, Section 3, 1999, 4 pages.
Tello, Ernest R., "Natural-Language Systems", Mastering AI Tools and Techniques, Howard W. Sams & Company, 1988.
Tenenbaum et al., "Data Structure Using Pascal", Prentice-Hall, Inc., 1981, 34 pages.
TextnDrive, "Text'nDrive App Demo—Listen and Reply to your Messages by Voice while Driving!", YouTube Video available at <http://www.youtube.com/watch?v=WaGfzoHsAMw>, Apr. 27, 2010, 1 page.
TG3 Electronics, Inc., "BL82 Series Backlit Keyboards", available at <http://www.tg3electronics.com/products/backlit/backlit.htm>, retrieved on Dec. 19, 2002, 2 pages.
The HP 150, "Hardware: Compact, Powerful, and Innovative", vol. 8, No. 10, Oct. 1983, pp. 36-50.
Tidwell, Jenifer, "Animated Transition", Designing Interfaces, Patterns for effective Interaction Design, Nov. 2005, First Edition, 4 pages.
Timothy et al., "Speech-Based Annotation and Retrieval of Digital Photographs", Interspeech. 8th Annual Conference of the International Speech Communication Association, Aug. 27, 2007, pp. 2165-2168.
Tofel, Kevin C., "SpeakTolt: A Personal Assistant for Older iPhones, iPads", Apple News, Tips and Reviews, Feb. 9, 2012, 7 pages.
Tombros et al., "Users' Perception of Relevance of Spoken Documents", Journal of the American Society for Information Science, New York, Aug. 2000, pp. 929-939.
Top 10 Best Practices for Voice User Interface Design available at <http://www.developer.com/voice/article.php/1567051/Top-10-Best-Practices-for-Voice-UserInterface-Design,htm>, Nov. 1, 2002, 4 pages.
Touch, Joseph, "Zoned Analog Personal Teleconferencing", USC / Information Sciences Institute, 1993, pp. 1-19.
Toutanova et al., "Feature-Rich Part-of-Speech Tagging with a Cyclic Dependency Network", Computer Science Dept., Stanford University, Stanford CA 94305-9040, 2003, 8 pages.
Trigg et al., "Hypertext Habitats: Experiences of Writers in NoteCards", Hypertext '87 Papers; Intelligent Systems Laboratory, Xerox Palo Alto Research Center, 1987, pp. 89-108.
Trowbridge, David, "Using Andrew for Development of Educational Applications", Center for Design of Educational Computing, Carnegie-Mellon University (CMU-ITC-85-065), Jun. 2, 1985, pp. 1-6.
Tsai et al., "Attributed Grammar-A Tool for Combining Syntactic and Statistical Approaches to Pattern Recognition", IEEE Transactions on Systems, Man and Cybernetics, vol. SMC-10, No. 12, Dec. 1980, 13 pages.
Tsao et al., "Matrix Quantizer Design for LPC Speech Using the Generalized Lloyd Algorithm", (IEEE Transactions on Acoustics, Speech and Signal Processing, Jun. 1985), as reprinted in Vector Quantization (IEEE Press 1990), 1990, pp. 237-245.
Tucker, Joshua, "Too Lazy to Grab Your TV Remote? Use Siri Instead", Engadget, Nov. 30, 2011, 8 pages.
Tur et al., "The CALO Meeting Assistant System", IEEE Transactions on Audio, Speech and Language Processing, vol. 18, No. 6, Aug. 2010, pp. 1601-1611.
Tur et al., "The CALO Meeting Speech Recognition and Understanding System", Proc. IEEE Spoken Language Technology Workshop, 2008, 4 pages.
Turletti, Thierry, "The INRIA Videoconferencing System (IVS)", Oct. 1994, pp. 1-7.
Tyson et al., "Domain-Independent Task Specification in the TACITUS Natural Language System", SRI International, Artificial Intelligence Center, May 1990, 16 pages.
Udell, J., "Computer Telephony", BYTE, vol. 19, No. 7, Jul. 1994, 9 pages.
Uslan et al., "A Review of Renter-Joyce's MAGic for Windows NT", Journal of Visual Impairment and Blindness, Dec. 1999, pp. 666-668.
Uslan et al., "A Review of Supernova Screen Magnification Program for Windows", Journal of Visual Impairment & Blindness, Feb. 1999, pp. 108-110.
Uslan et al., "A Review of Two Screen Magnification Programs for Windows 95: Magnum 95 and LP-Windows", Journal of Visual Impairment & Blindness, Sep.-Oct. 1997, pp. 9-13.
Van Santen, J. P.H., "Contextual Effects on Vowel Duration", Journal Speech Communication, vol. 11, No. 6, Dec. 1992, pp. 513-546.
Veiga, Alex, "AT&T Wireless Launching Music Service", available at <http://bizyahoo.com/ap/041005/at_t_mobile_music_5.html?printer=1>, Oct. 5, 2004, 2 pages.
Vepa et al., "New Objective Distance Measures for Spectral Discontinuities in Concatenative Speech Synthesis", Proceedings of the IEEE 2002 Workshop on Speech Synthesis, 2002, 4 pages.
Verschelde, Jan, "MATLAB Lecture 8. Special Matrices in MATLAB", UIC, Dept. of Math, Stat. & CS, MCS 320, Introduction to Symbolic Computation, 2007, 4 pages.
Vegas et al., "Chat Circles", SIGCHI Conference on Human Factors in Computing Systems, May 15-20, 1999, pp. 9-16.
Viikki et al., "Speaker-and Language-Independent Speech Recognition in Mobile Communication Systems", IEEE, vol. 1, 2001, pp. 5-8.
Vingron, Martin, "Near-Optimal Sequence Alignment", Current Opinion in Structural Biology, vol. 6, No. 3, 1996, pp. 346-352.
Vlingo Incar, "Distracted Driving Solution with Vlingo InCar", YouTube Video, Available online at <http://www.youtube.com/watch?v=Vqs8XfXxgz4>, Oct. 2010, 2 pages.
Vlingo, "Vlingo Launches Voice Enablement Application on Apple App Store", Press Release, Dec. 3, 2008, 2 pages.
Vogel et al., "Shift: A Technique for Operating Pen-Based Interfaces Using Touch", CHI '07 Proceedings, Mobile Interaction Techniques I, Apr. 28-May 3, 2007, pp. 657-666.
Voiceassist, "Send Text, Listen to and Send E-Mail by Voice", YouTube Video, Available online at <http://www.youtube.com/watch?v=0tEU61nHHA4>, Jul. 30, 2009, 1 page.
Voiceonthego, "Voice on the Go (BlackBerry)", YouTube Video, available online at <http://www.youtube.com/watch?v=pJqpWgQS98w>, Jul. 27, 2009, 1 page.
W3C Working Draft, "Speech Synthesis Markup Language Specification for the Speech Interface Framework", available at <http://www.w3org./TR/speech-synthesis>, retrieved on Dec. 14, 2000, 42 pages.
Wadlow, M. G., "The Role of Human Interface Guidelines in the Design of Multimedia Applications", Carnegie Mellon University (To be Published in Current Psychology: Research and Reviews, Summer 1990 (CMU-ITC-91-101), 1990, pp. 1-22.
Wahlster et al., "Smartkom: Multimodal Communication with a Life-Like Character", Eurospeech—Scandinavia, 7th European Conference on Speech Communication and Technology, 2001, 5 pages.

(56) **References Cited**

OTHER PUBLICATIONS

Waibel, Alex, "Interactive Translation of Conversational Speech", Computer, vol. 29, No. 7, Jul. 1996, pp. 41-48.
Waldinger et al., "Deductive Question Answering from Multiple Resources", New Directions in Question Answering, Published by AAAI, Menlo Park, 2003, 22 pages.
Walker et al., "Natural Language Access to Medical Text", SRI International, Artificial Intelligence Center, Mar. 1981, 23 pages.
Walker et al., "The LOCUS Distributed Operating System 1", University of California Los Angeles, 1983, pp. 49-70.
Waltz, D., "An English Language Question Answering System for a Large Relational Database", ACM, vol. 21, No. 7, 1978, 14 pages.
Wang et al., "An Industrial-Strength Audio Search Algorithm", In Proceedings of the International Conference on Music Information Retrieval (ISMIR), 2003, 7 pages.
Wang et al., "An Initial Study on Large Vocabulary Continuous Mandarin Speech Recognition with Limited Training Data Based on Sub-Syllabic Models", International Computer Symposium, vol. 2, 1994, pp. 1140-1145.
Wang et al., "Tone Recognition of Continuous Mandarin Speech Based on Hidden Markov Model", International Journal of Pattern Recognition and Artificial Intelligence, vol. 8, 1994, pp, 233-245.
Ward et al., "A Class Based Language Model for Speech Recognition", IEEE, 1996, 3 pages.
Ward et al., "Recent Improvements in the CMU Spoken Language Understanding System", ARPA Human Language Technology Workshop, 1994, 4 pages.
Ward, Wayne, "The CMU Air Travel Information Service: Understanding Spontaneous Speech", Proceedings of the Workshop on Speech and Natural Language, HLT '90, 1990, pp. 127-129.
Ware et al., "The DragMag Image Magnifier Prototype I", Apple Inc., Video Clip, Marlon, on a CD, Applicant is not Certain about the Date for the Video Clip., 1995.
Ware et al., "The DragMag Image Magnifier", CHI '95 Mosaic of Creativity, May 7-11, 1995, pp. 407-408.
Warren et al., "An Efficient Easily Adaptable System for Interpreting Natural Language Queries", American Journal of Computational Linguistics, vol. 8, No. 3-4, 1982, 11 pages.
Watabe et al., "Distributed Multiparty Desktop Conferencing System: MERMAID", CSCW 90 Proceedings, Oct. 1990, pp. 27-38.
Weizenbaum, J., "ELIZA—A Computer Program for the Study of Natural Language Communication Between Man and Machine", Communications of the ACM, vol. 9, No. 1, Jan. 1966, 10 pages.
Werner et al., "Prosodic Aspects of Speech, Universite de Lausanne", Fundamentals of Speech Synthesis and Speech Recognition: Basic Concepts, State of the Art and Future Challenges, 1994, 18 pages.
Westerman, Wayne, "Hand Tracking, Finger Identification and Chordic Manipulation on a Multi-Touch Surface", Doctoral Dissertation, 1999, 363 Pages.
What is Fuzzy Logic?, available at <http://www.cs.cmu.edu>, retrieved on Apr. 15, 1993, 5 pages.
White, George M., "Speech Recognition, Neural Nets, and Brains", Jan. 1992, pp. 1-48.
Wikipedia, "Acoustic Model", available at <http://en.wikipedia.org/wiki/AcousticModel>, retrieved on Sep. 14, 2011, 2 pages.
Wikipedia, "Language Model", available at <http://en.wikipedia.org/wiki/Language_model>, retrieved on Sep. 14, 2011, 3 pages.
Wikipedia, "Speech Recognition", available at <http://en.wikipedia.org/wiki/Speech_recognition>, retrieved on Sep. 14, 2011, 10 pages.
Wilensky et al., "Talking to UNIX in English: An Overview of UC", Communications of the ACM, vol. 27, No. 6, Jun. 1984, pp. 574-593.
Wilson, Mark, "New iPod Shuffle Moves Buttons to Headphones, Adds Text to Speech", available at <http://gizmodo.com/5167946/new-ipod-shuffle-moves-buttons-to-headphones-adds-text-to-speech>, Mar. 11, 2009, 13 pages.
Windows XP: A Big Surprise!—Experiencing Amazement from Windows XP, New Computer, No. 2, Feb. 28, 2002, 8 pages.
Winiwarter et al., "Adaptive Natural Language Interfaces to FAQ Knowledge Bases", Proceedings of 4th International Conference on Applications of Natural Language to Information Systems, Austria, Jun. 1999, 22 pages.
Wirelessinfo, "SMS/MMS Ease of Use (8.0)", available at <http://www.wirelessinfo.com/content/palm-Treo-750-Cell-Phone-Review/Messaging.htm>, Mar. 2007, 3 pages.
Wolff, M., "Post Structuralism and the ARTFUL Database: Some Theoretical Considerations", Information Technology and Libraries, vol. 13, No. 1, Mar. 1994, 10 pages.
Wong et al., "An 800 Bit/s Vector Quantization LPC Vocoder", (IEEE Transactions on Acoustics, Speech and Signal Processing, Oct. 1982), as reprinted in Vector Quantization (IEEE Press, 1990), 1990, pp. 222-232.
Wong et al., "Very Low Data Rate Speech Compression with LPC Vector and Matrix Quantization", (Proceedings of the IEEE Int'l Acoustics, Speech and Signal Processing Conference, Apr. 1983), as reprinted in Vector Quantization (IEEE Press, 1990), 1990, pp. 233-236.
Worldwide Character Encoding, Version 2.0, vols. 1,2 by Unicode, Inc., 12 pages.
Written Opinion received for PCT Patent Application No. PCT/US2005/046797, dated Nov. 24, 2006, 9 pages.
Wu et al., "Automatic Generation of Synthesis Units and Prosodic Information for Chinese Concatenative Synthesis", Speech Communication, vol. 35, No. 3-4, Oct. 2001, pp. 219-237.
Wu et al., "KDA: A Knowledge-Based Database Assistant", Proceeding of the Fifth International Conference on Engineering (IEEE Cat.No. 89CH2695-5), 1989, 8 pages.
Wu, M., "Digital Speech Processing and Coding", Multimedia Signal Processing, Lecture-2 Course Presentation, University of Maryland, College Park, 2003, 8 pages.
Wu, M., "Speech Recognition, Synthesis, and H.C.I.", Multimedia Signal Processing, Lecture-3 Course Presentation, University of Maryland, College Park, 2003, 11 pages.
Wyle, M. F., "A Wide Area Network Information Filter", Proceedings of First International Conference on Artificial Intelligence on Wall Street, Oct. 1991, 6 pages.
Xiang et al., "Correcting Phoneme Recognition Errors in Learning Word Pronunciation through Speech Interaction", Speech Communication, vol. 55, No. 1, Jan. 1, 2013, pp. 190-203.
Xu et al., "Speech-Based Interactive Games for Language Learning: Reading, Translation, and Question-Answering", Computational Linguistics and Chinese Language Processing, vol. 14, No. 2, Jun. 2009, pp. 133-160.
Yang et al., "Auditory Representations of Acoustic Signals", IEEE Transactions of Information Theory, vol. 38, No. 2, Mar. 1992, pp. 824-839.
Yang et al., "Hidden Markov Model for Mandarin Lexical Tone Recognition", IEEE Transactions on Acoustics, Speech and Signal Processing, vol. 36, No. 7, Jul. 1988, pp. 988-992.
Yang et al., "Smart Sight: A Tourist Assistant System", Proceedings of Third International Symposium on Wearable Computers, 1999, 6 pages.
Yankelovich et al., "Intermedia: The Concept and the Construction of a Seamless Information Environment", Computer Magazine, IEEE, Jan. 1988, 16 pages.
Yarowsky, David, "Homograph Disambiguation in Text-to-Speech Synthesis", Chapter 12, Progress in Speech Synthesis, 1997, pp. 157-172.
Yiourgalis et al., "Text-to-Speech system for Greek", ICASSP 91, vol. 1, May 14-17, 1991, pp. 525-528.
Yoon et al., "Letter-to-Sound Rules for Korean", Department of Linguistics, The Ohio State University, 2002, 4 pages.
Young, S. J., "The HTK Book", Available on <http://htk.eng.cam.ac.uk>, 4 pages.
Youtube, "New bar search for Facebook", Available at "https://www.youtube.com/watch?v=vwgN1WbvCas", 1 page.
Yunker, John, "Beyond Borders: Web Globalization Strategies", New Riders, Aug. 22, 2002, 11 pages.
Zainab, "Google Input Tools Shows Onscreen Keyboard in Multiple Languages [Chrome]", available at <http://www.addictivetips.com/

(56) **References Cited**

OTHER PUBLICATIONS

internet-tips/google-input-tools-shows-multiple-language-onscreen-keyboards-chrome/>, Jan. 3, 2012, 3 pages.
Zelig, "A Review of the Palm Treo 750v", available at <http://www.mtekk.com.au/Articles/tabid/54/articleType/ArticleView/articleId/769/A-Review-of-the-Palm-Treo-750v.aspx>, Feb. 5, 2007, 3 pages.
Zeng et al., "Cooperative Intelligent Software Agents", The Robotics Institute, Carnegie-Mellon University, Mar. 1995, 13 pages.
Zhang et al., "Research of Text Classification Model Based on Latent Semantic Analysis and Improved HS-SVM", Intelligent Systems and Applications (ISA), 2010 2nd International Workshop, May 22-23, 2010, 5 pages.
Zhao et al., "Intelligent Agents for Flexible Workflow Systems", Proceedings of the Americas Conference on Information Systems (AMCIS), Oct. 1998, 4 pages.
Zhao, Y., "An Acoustic-Phonetic-Based Speaker Adaptation Technique for Improving Speaker-Independent Continuous Speech Recognition", IEEE Transactions on Speech and Audio Processing, vol. 2, No. 3, Jul. 1994, pp. 380-394.
Zhong et al., "JustSpeak: Enabling Universal Voice Control on Android", W4A'14 Proceedings of the 11th Web for All Conference, No. 36, Apr. 7-9, 2014, 8 pages.
Ziegler, K, "A Distributed Information System Study", IBM Systems Journal, vol. 18, No. 3, 1979, pp. 374-401.
Zipnick et al., "U.S. Appl. No. 10/859,661, filed Jun. 2, 2004".
Zovato et al., "Towards Emotional Speech Synthesis: A Rule based Approach", Proceedings of 5th ISCA Speech Synthesis Workshop—Pittsburgh, 2004, pp. 219-220.
Zue et al., "From Interface to Content: Translingual Access and Delivery of On-Line Information", Eurospeech, 1997, 4 pages.
Zue et al., "Jupiter: A Telephone-Based Conversational Interface for Weather Information", IEEE Transactions on Speech and Audio Processing, Jan. 2000, 13 pages.
Zue et al., "Pegasus: A Spoken Dialogue Interface for On-Line Air Travel Planning", Speech Communication, vol. 15, 1994, 10 pages.
Zue et al., "The Voyager Speech Understanding System: Preliminary Development and Evaluation", Proceedings of IEEE, International Conference on Acoustics, Speech and Signal Processing, 1990, 4 pages.
Zue, Victor W., "Toward Systems that Understand Spoken Language", ARPA Strategic Computing Institute, Feb. 1994, 9 pages.
Zue, Victor, "Conversational Interfaces: Advances and Challenges", Spoken Language System Group, Sep. 1997, 10 pages.

* cited by examiner

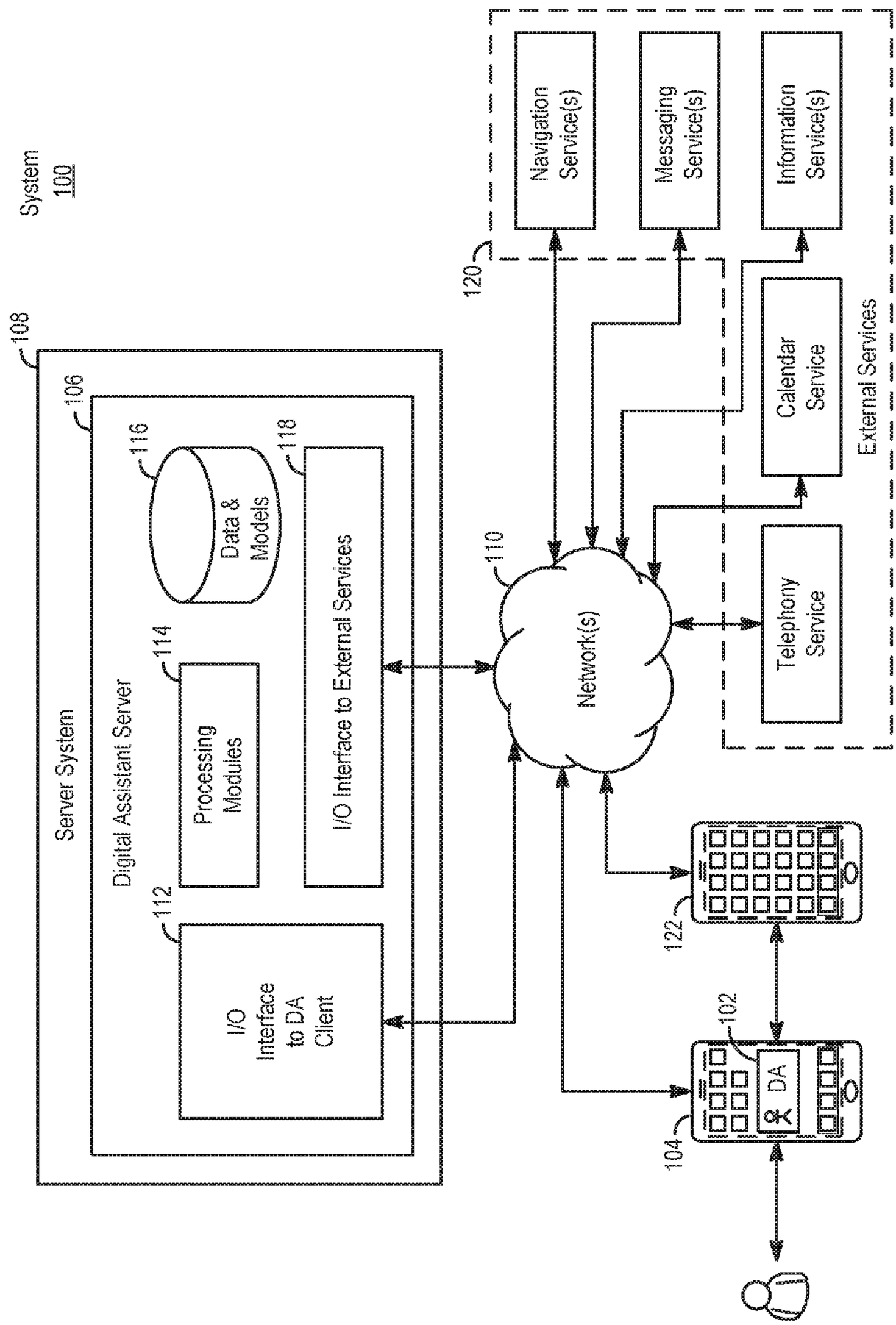
System
100
108
Server System
106
Digital Assistant Server
116
Data &
Models
118
I/O Interface to External Services
114
Processing
Modules
112
I/O
Interface
to DA
Client
110
Network(s)
120
Navigation
Service(s)
Messaging
Service(s)
Information
Service(s)
Calendar
Service
Telephony
Service
External Services
122
102
DA
104

FIG. 1

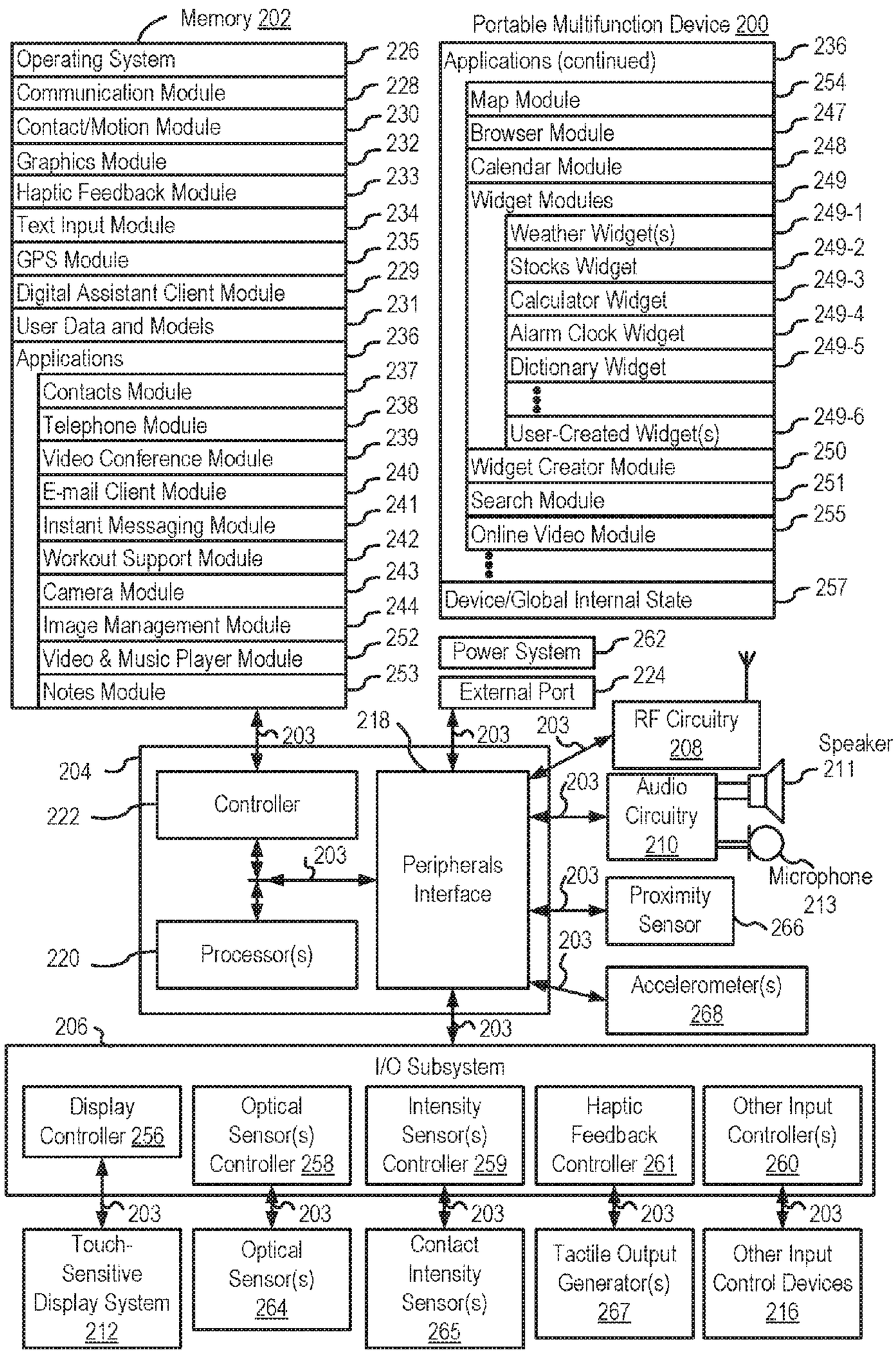
Memory 202
Operating System 226
Communication Module 228
Contact/Motion Module 230
Graphics Module 232
Haptic Feedback Module 233
Text Input Module 234
GPS Module 235
Digital Assistant Client Module 229
User Data and Models 231
Applications 236
Contacts Module 237
Telephone Module 238
Video Conference Module 239
E-mail Client Module 240
Instant Messaging Module 241
Workout Support Module 242
Camera Module 243
Image Management Module 244
Video & Music Player Module 252
Notes Module 253
Portable Multifunction Device 200
Applications (continued) 236
Map Module 254
Browser Module 247
Calendar Module 248
Widget Modules 249
Weather Widget(s) 249-1
Stocks Widget 249-2
Calculator Widget 249-3
Alarm Clock Widget 249-4
Dictionary Widget 249-5
User-Created Widget(s) 249-6
Widget Creator Module 250
Search Module 251
Online Video Module 255
Device/Global Internal State 257
Power System 262
External Port 224
RF Circuitry 208
Speaker 211
Audio Circuitry 210
Microphone 213
Proximity Sensor 266
Accelerometer(s) 268
Controller 222
Processor(s) 220
Peripherals Interface 218
204
203
206
I/O Subsystem
Display Controller 256
Optical Sensor(s) Controller 258
Intensity Sensor(s) Controller 259
Haptic Feedback Controller 261
Other Input Controller(s) 260
Touch-Sensitive Display System 212
Optical Sensor(s) 264
Contact Intensity Sensor(s) 265
Tactile Output Generator(s) 267
Other Input Control Devices 216

FIG. 2A

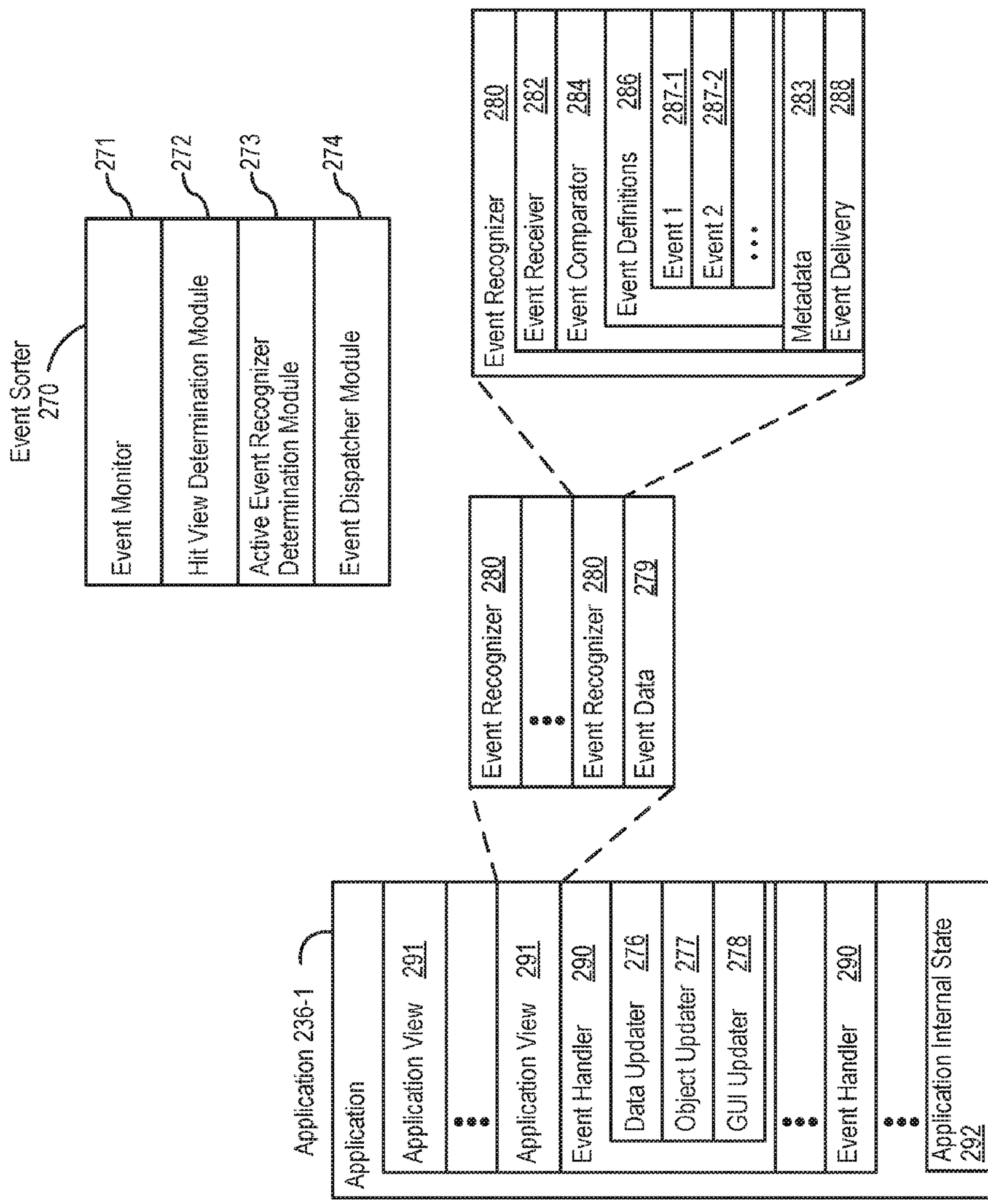
Event Sorter
270
271
Event Monitor
272
Hit View Determination Module
273
Active Event Recognizer Determination Module
274
Event Dispatcher Module
Event Recognizer 280
Event Receiver 282
Event Comparator 284
Event Definitions 286
Event 1 287-1
Event 2 287-2
Metadata 283
Event Delivery 288
Event Recognizer 280
Event Recognizer 280
Event Data 279
Application 236-1
Application
Application View 291
Application View 291
Event Handler 290
Data Updater 276
Object Updater 277
GUI Updater 278
Event Handler 290
Application Internal State 292

FIG. 2B

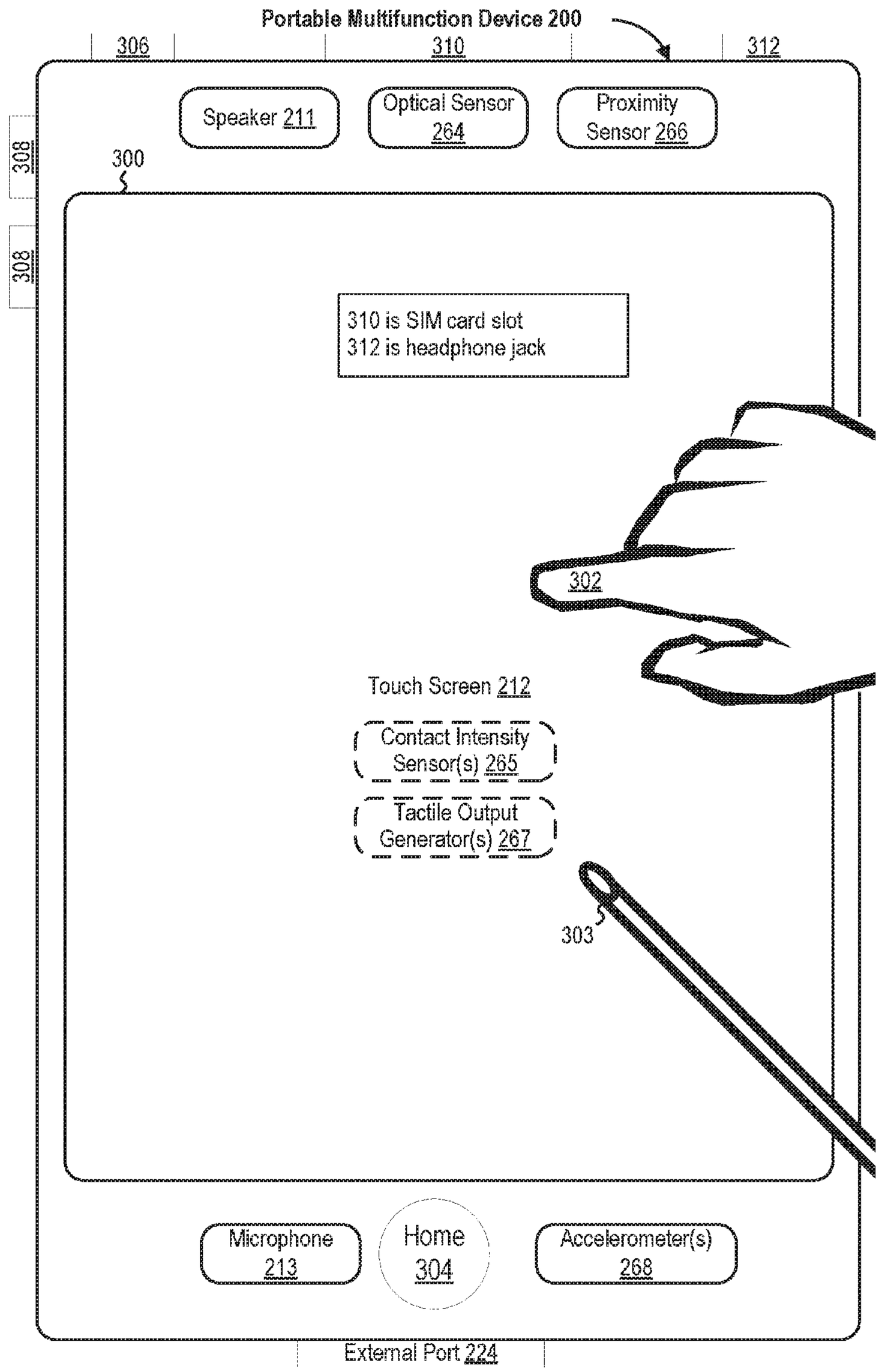
Portable Multifunction Device 200
306
310
312
Speaker 211
Optical Sensor 264
Proximity Sensor 266
308
308
300
310 is SIM card slot
312 is headphone jack
302
Touch Screen 212
Contact Intensity Sensor(s) 265
Tactile Output Generator(s) 267
303
Microphone 213
Home 304
Accelerometer(s) 268
External Port 224

FIG. 3

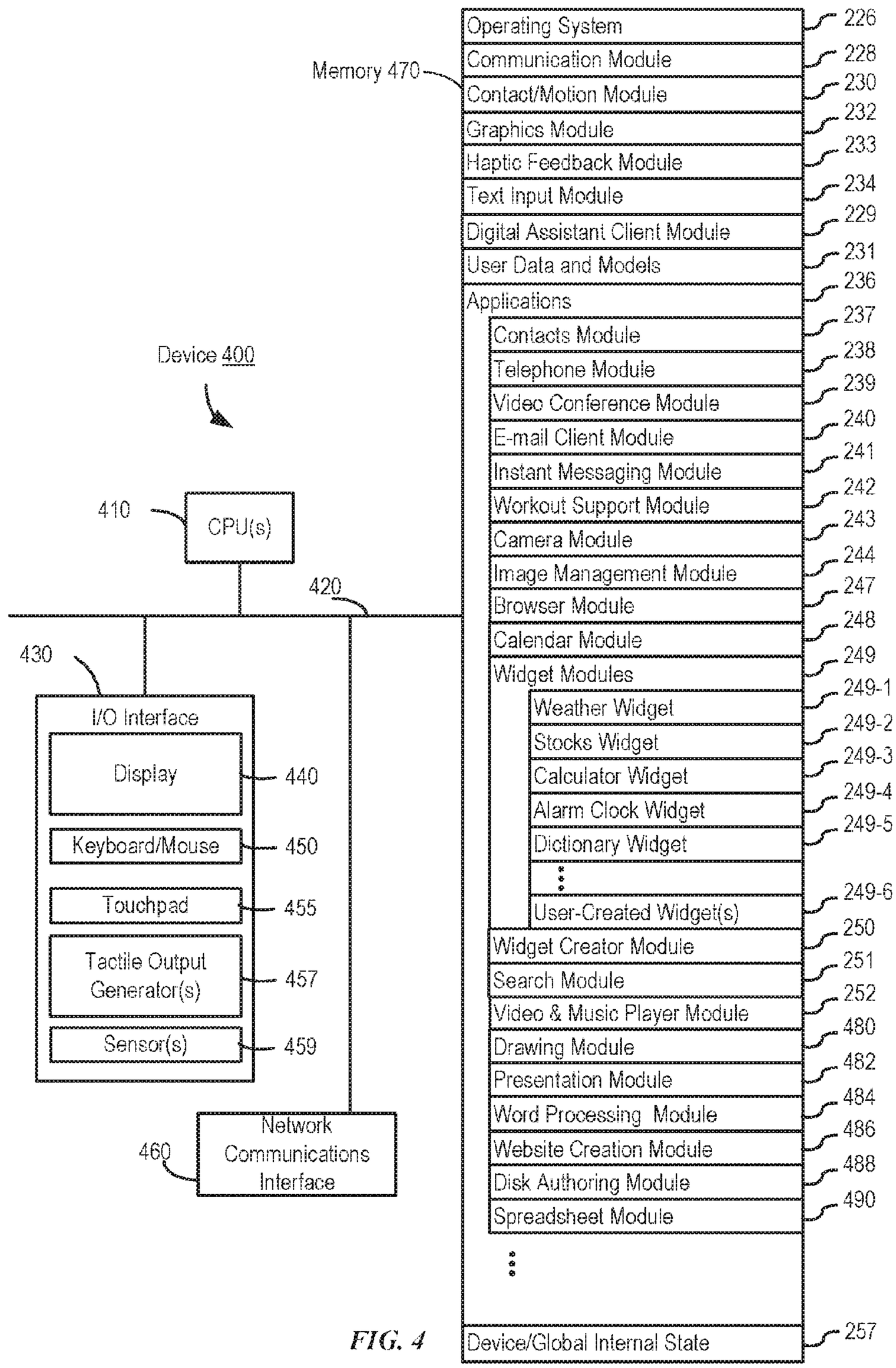
Device 400
410
CPU(s)
420
430
I/O Interface
Display
440
Keyboard/Mouse
450
Touchpad
455
Tactile Output Generator(s)
457
Sensor(s)
459
460
Network Communications Interface
Memory 470
Operating System
226
Communication Module
228
Contact/Motion Module
230
Graphics Module
232
Haptic Feedback Module
233
Text Input Module
234
Digital Assistant Client Module
229
User Data and Models
231
Applications
236
Contacts Module
237
Telephone Module
238
Video Conference Module
239
E-mail Client Module
240
Instant Messaging Module
241
Workout Support Module
242
Camera Module
243
Image Management Module
244
Browser Module
247
Calendar Module
248
Widget Modules
249
Weather Widget
249-1
Stocks Widget
249-2
Calculator Widget
249-3
Alarm Clock Widget
249-4
Dictionary Widget
249-5
User-Created Widget(s)
249-6
Widget Creator Module
250
Search Module
251
Video & Music Player Module
252
Drawing Module
480
Presentation Module
482
Word Processing Module
484
Website Creation Module
486
Disk Authoring Module
488
Spreadsheet Module
490
Device/Global Internal State
257

FIG. 4

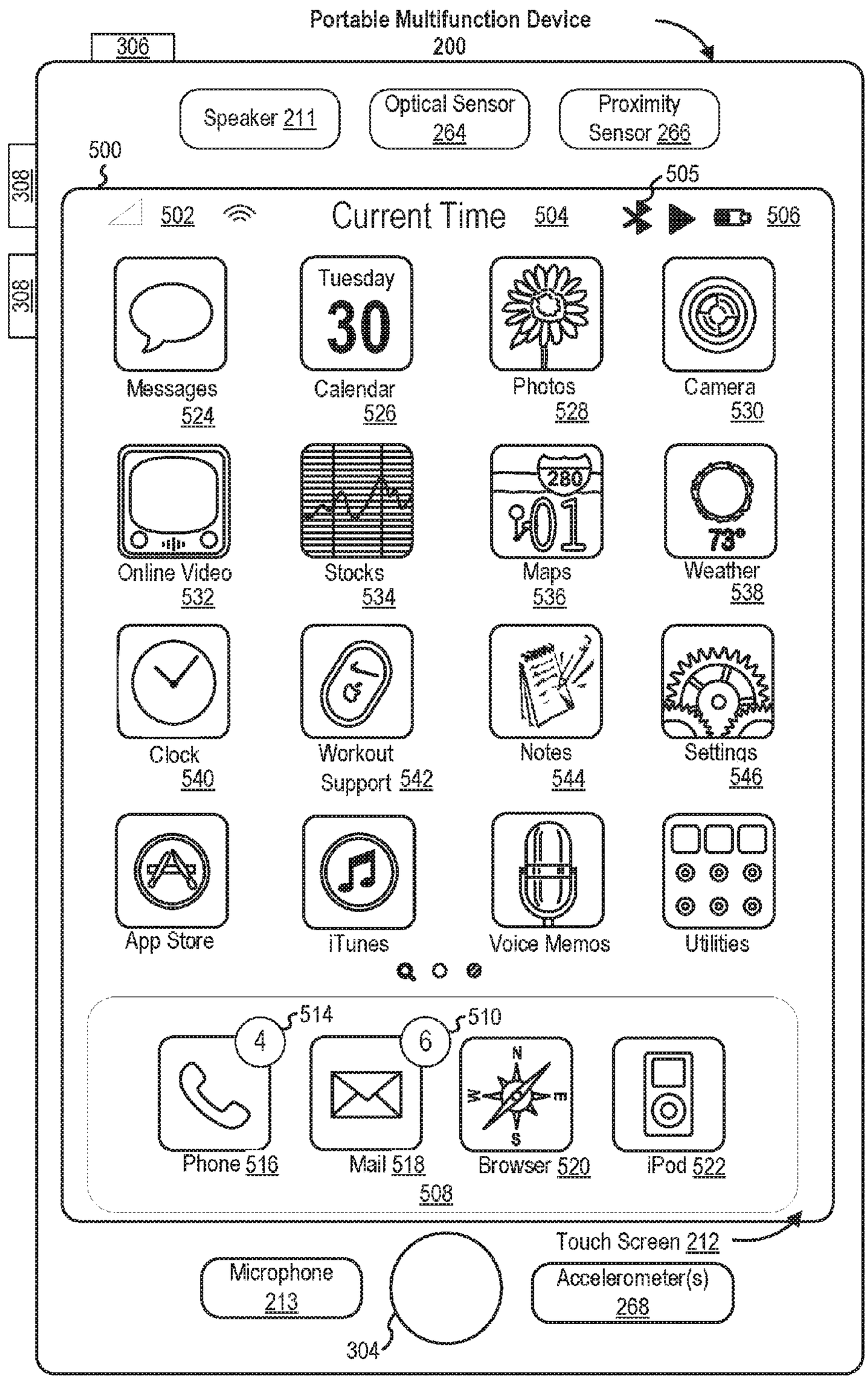
Portable Multifunction Device
200
306
Speaker 211
Optical Sensor 264
Proximity Sensor 266
500
308
308
505
502
Current Time 504
506
Tuesday
30
Messages 524
Calendar 526
Photos 528
Camera 530
Online Video 532
Stocks 534
Maps 536
Weather 538
Clock 540
Workout Support 542
Notes 544
Settings 546
App Store
iTunes
Voice Memos
Utilities
514
510
4
6
Phone 516
Mail 518
Browser 520
iPod 522
508
Touch Screen 212
Microphone 213
Accelerometer(s) 268
304

FIG. 5A

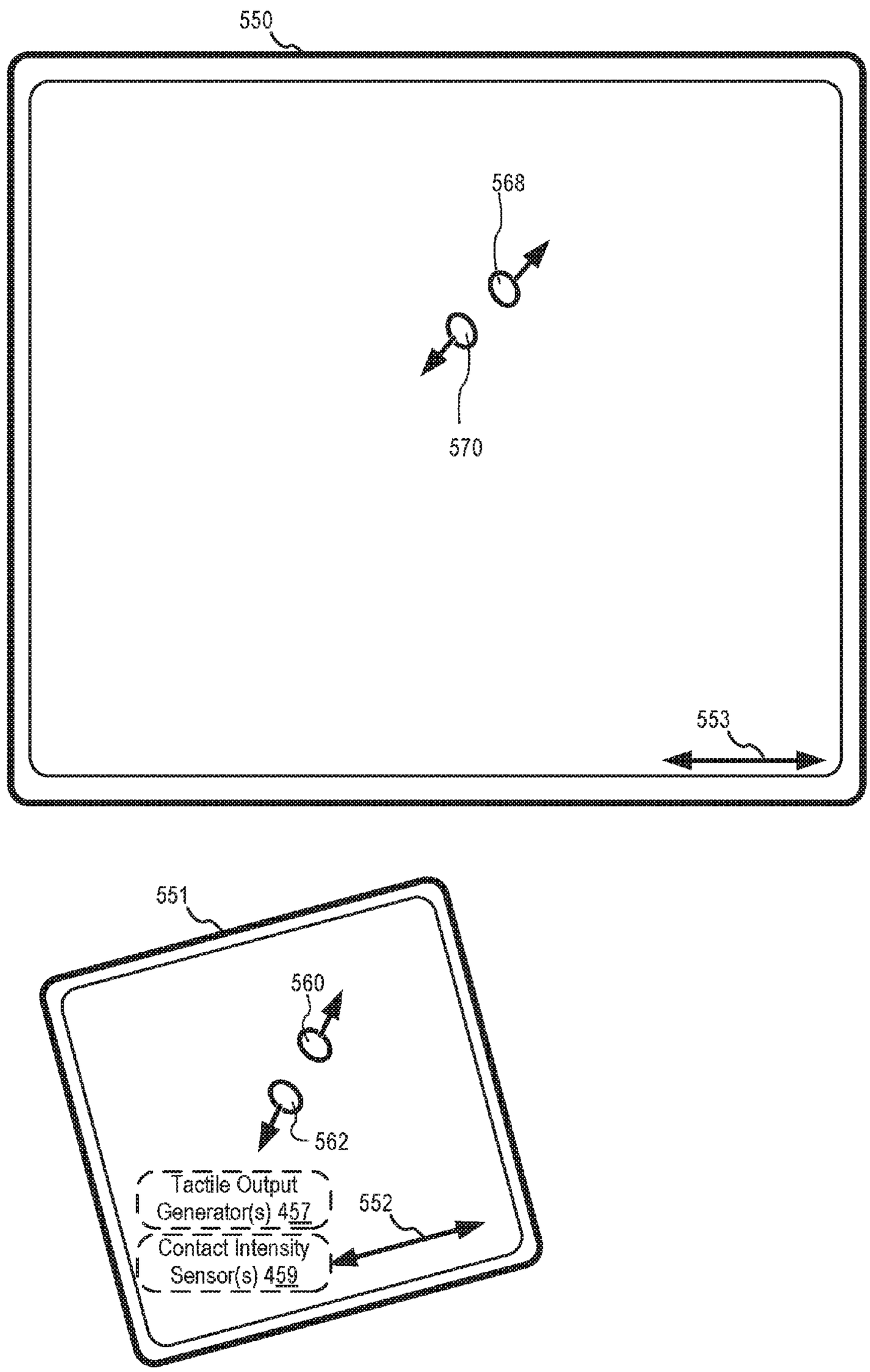
550
568
570
553
551
560
562
Tactile Output Generator(s) 457
552
Contact Intensity Sensor(s) 459

FIG. 5B

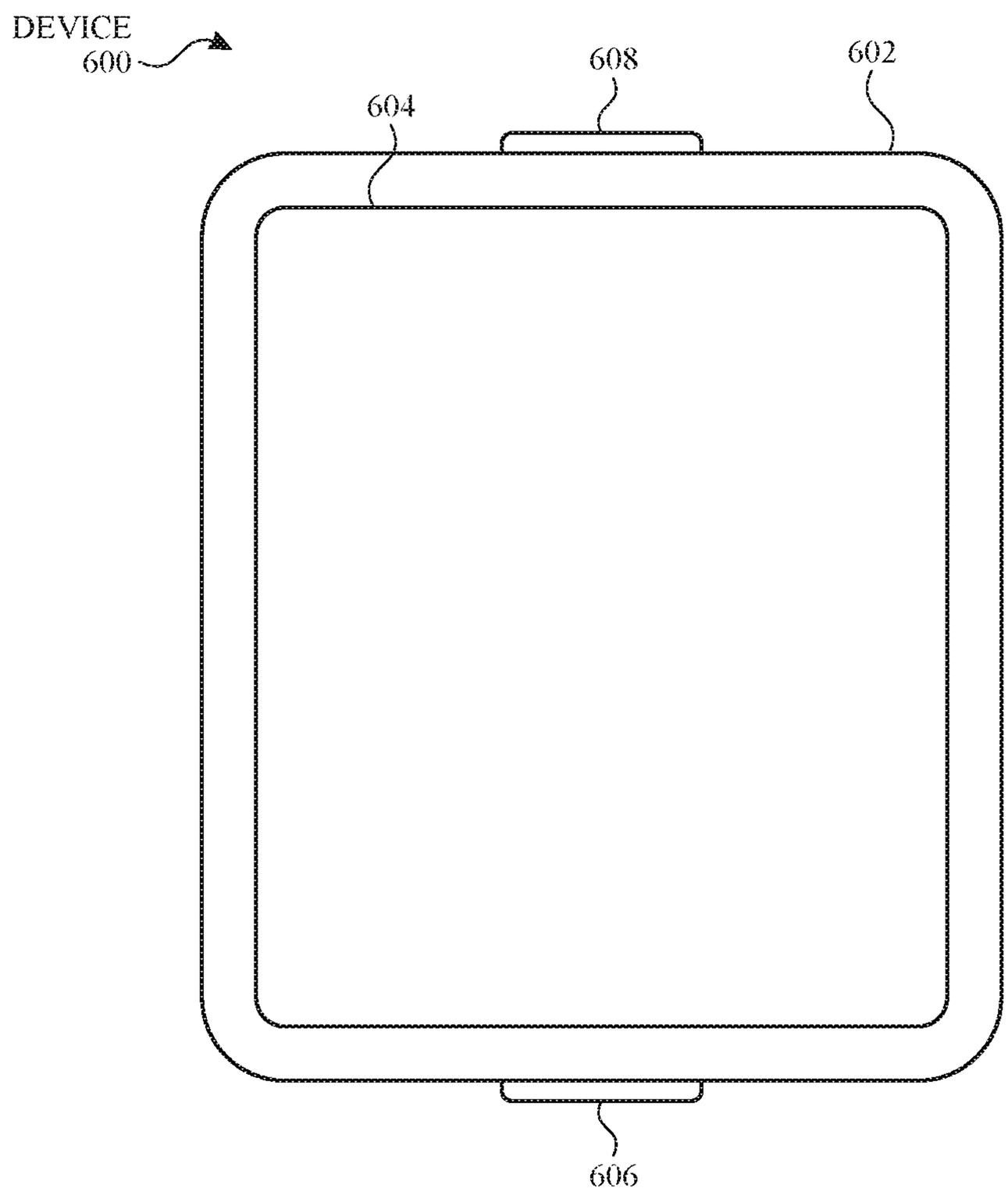

FIG. 6A

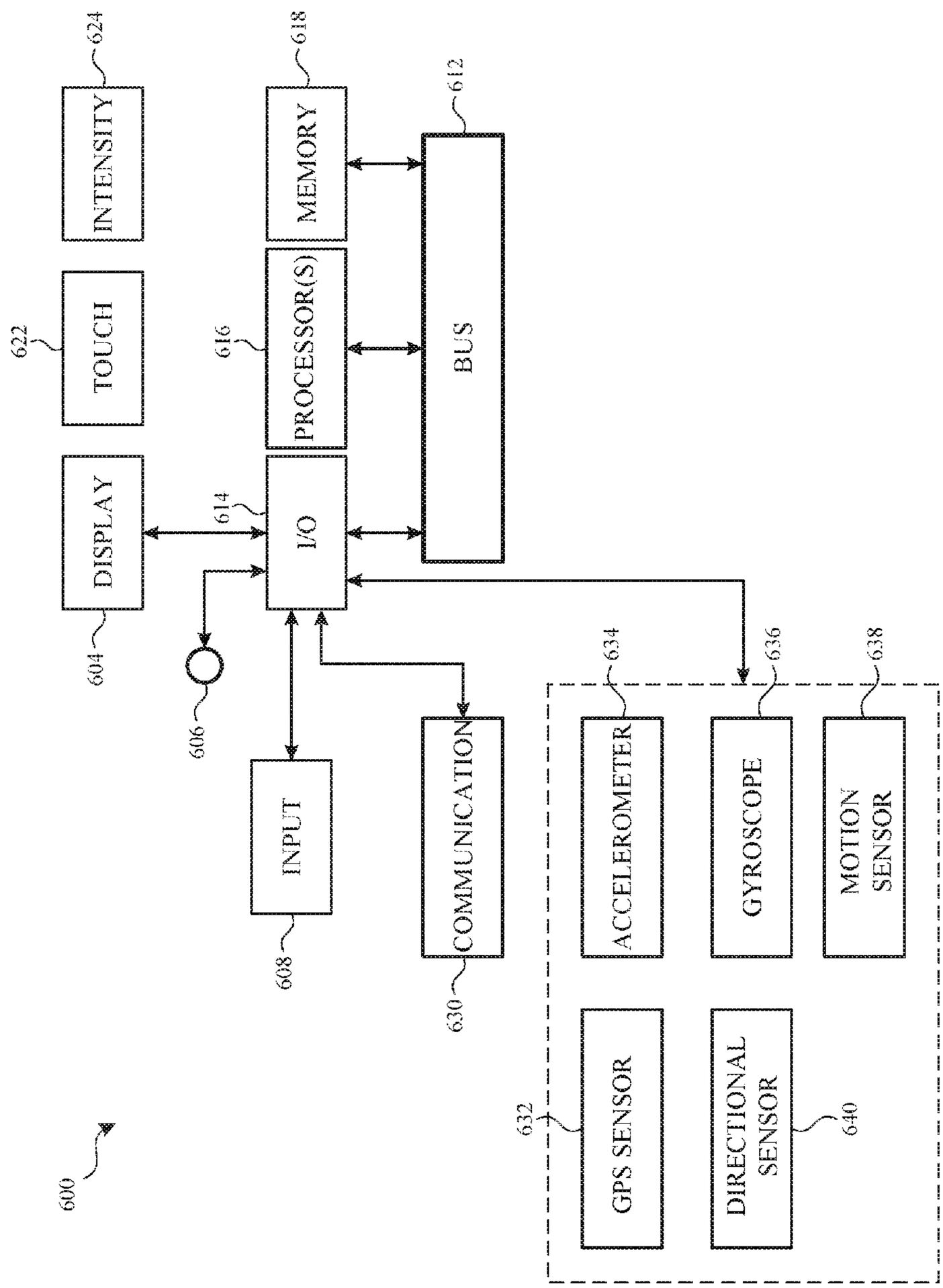
600
604
DISPLAY
622
TOUCH
624
INTENSITY
606
608
INPUT
614
I/O
616
PROCESSOR(S)
618
MEMORY
612
BUS
630
COMMUNICATION
632
GPS SENSOR
634
ACCELEROMETER
636
GYROSCOPE
638
MOTION SENSOR
640
DIRECTIONAL SENSOR

FIG. 6B

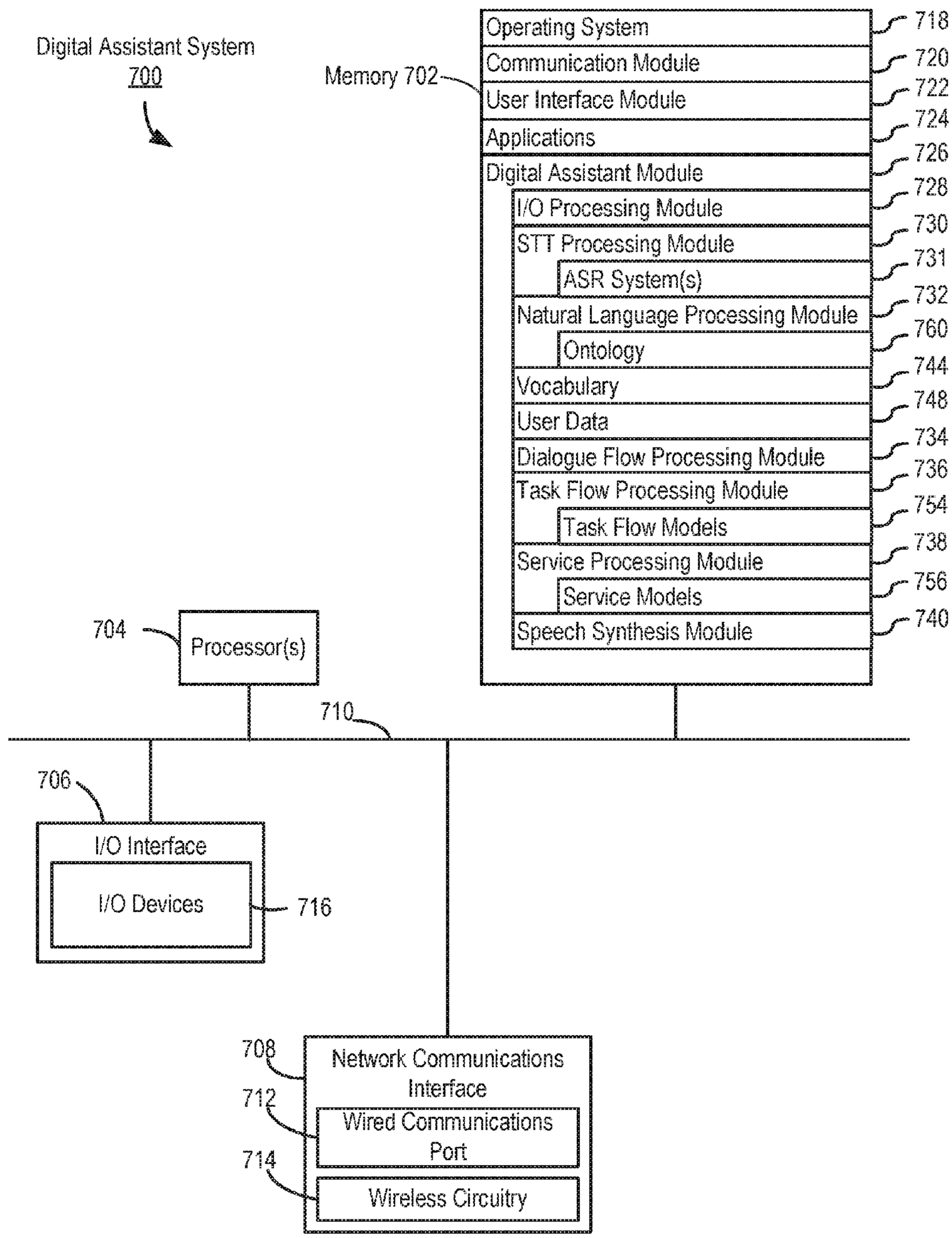
Digital Assistant System
700
Memory 702
Operating System
Communication Module
User Interface Module
Applications
Digital Assistant Module
I/O Processing Module
STT Processing Module
ASR System(s)
Natural Language Processing Module
Ontology
Vocabulary
User Data
Dialogue Flow Processing Module
Task Flow Processing Module
Task Flow Models
Service Processing Module
Service Models
Speech Synthesis Module
718
720
722
724
726
728
730
731
732
760
744
748
734
736
754
738
756
740
704
Processor(s)
710
706
I/O Interface
I/O Devices
716
708
Network Communications Interface
712
Wired Communications Port
714
Wireless Circuitry

FIG. 7A

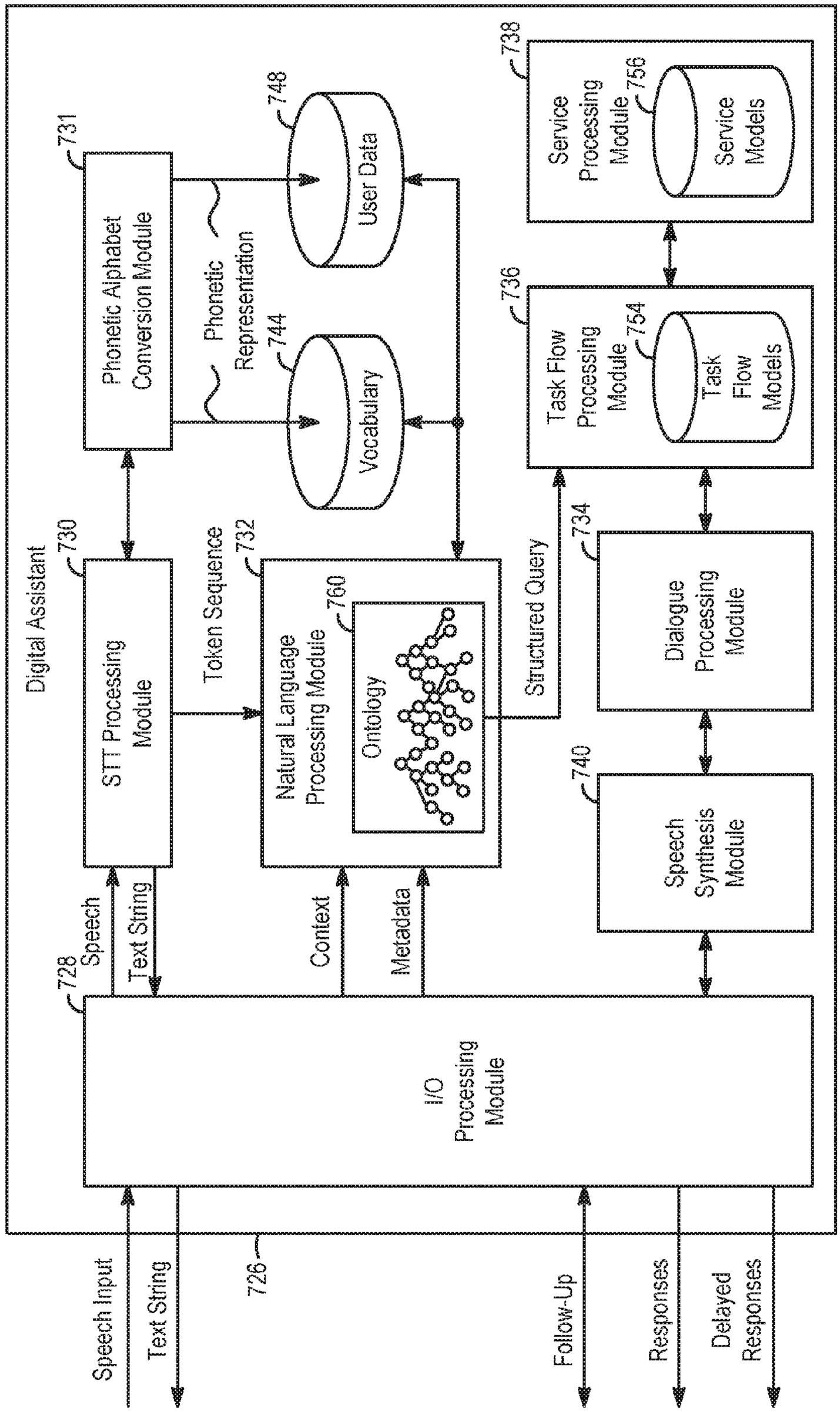
Digital Assistant
730
STT Processing Module
731
Phonetic Alphabet Conversion Module
Speech
Text String
728
Token Sequence
732
Natural Language Processing Module
760
Ontology
Phonetic Representation
744
Vocabulary
748
User Data
Context
Metadata
Structured Query
736
Task Flow Processing Module
754
Task Flow Models
738
Service Processing Module
756
Service Models
734
Dialogue Processing Module
740
Speech Synthesis Module
I/O Processing Module
Speech Input
Text String
726
Follow-Up
Responses
Delayed Responses

FIG. 7B

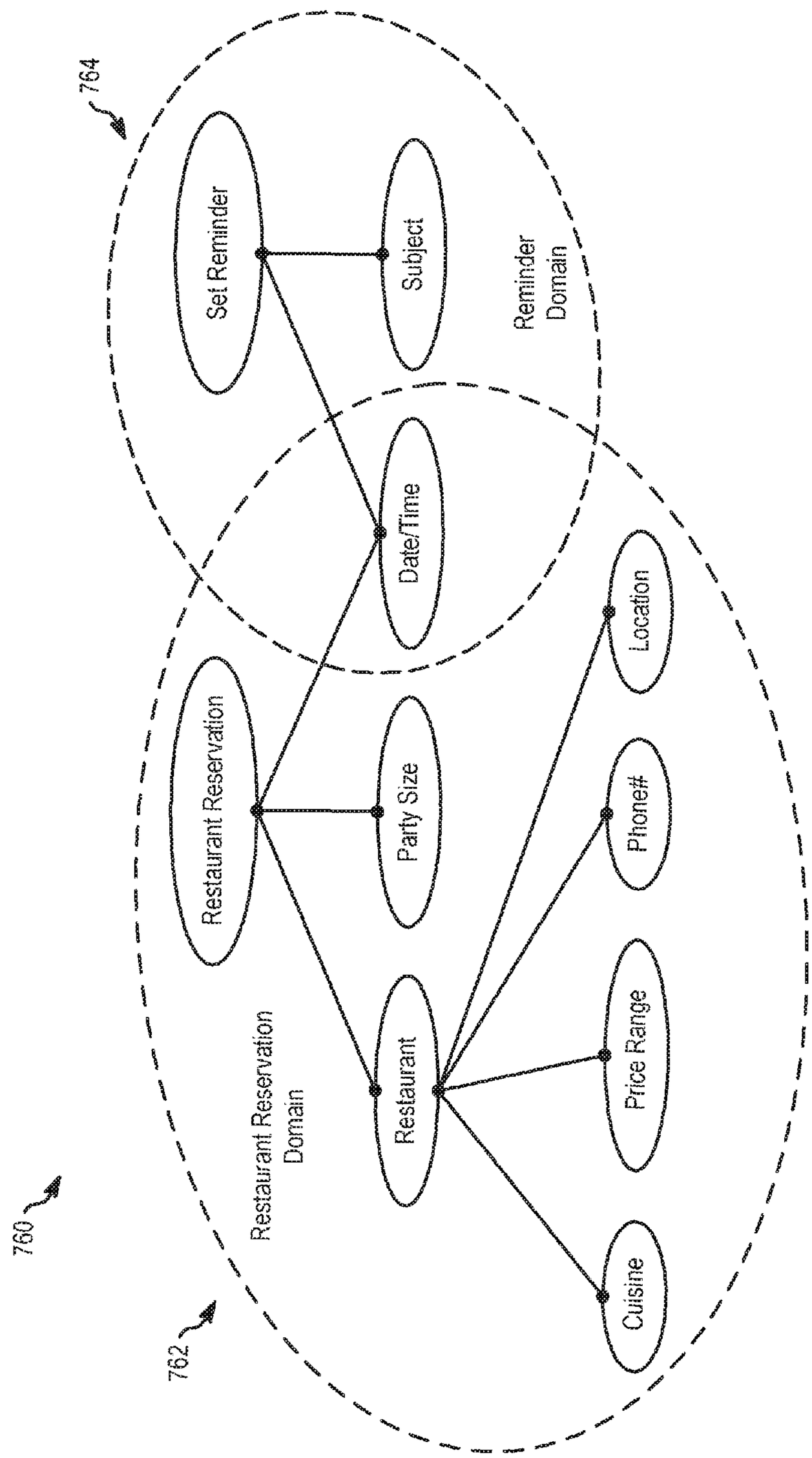
764
Set Reminder
Subject
Reminder Domain
Date/Time
Location
Restaurant Reservation
Party Size
Phone#
Restaurant
Price Range
Restaurant Reservation Domain
Cuisine
760
762

FIG. 7C

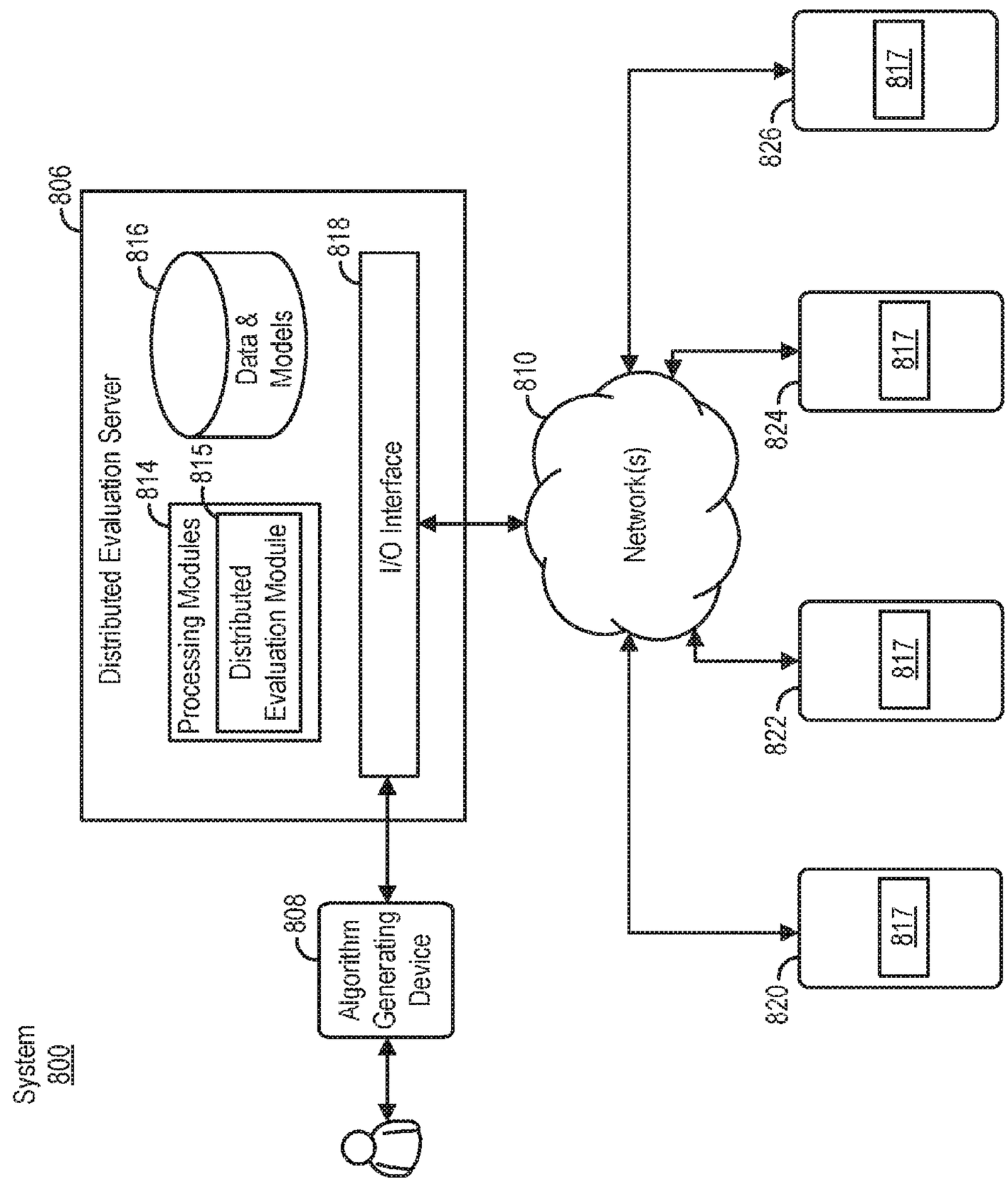
System
800
Algorithm Generating Device
808
Distributed Evaluation Server
806
Processing Modules
814
Distributed Evaluation Module
815
Data & Models
816
I/O Interface
818
Network(s)
810
817
826
817
824
817
822
817
820

FIG. 8

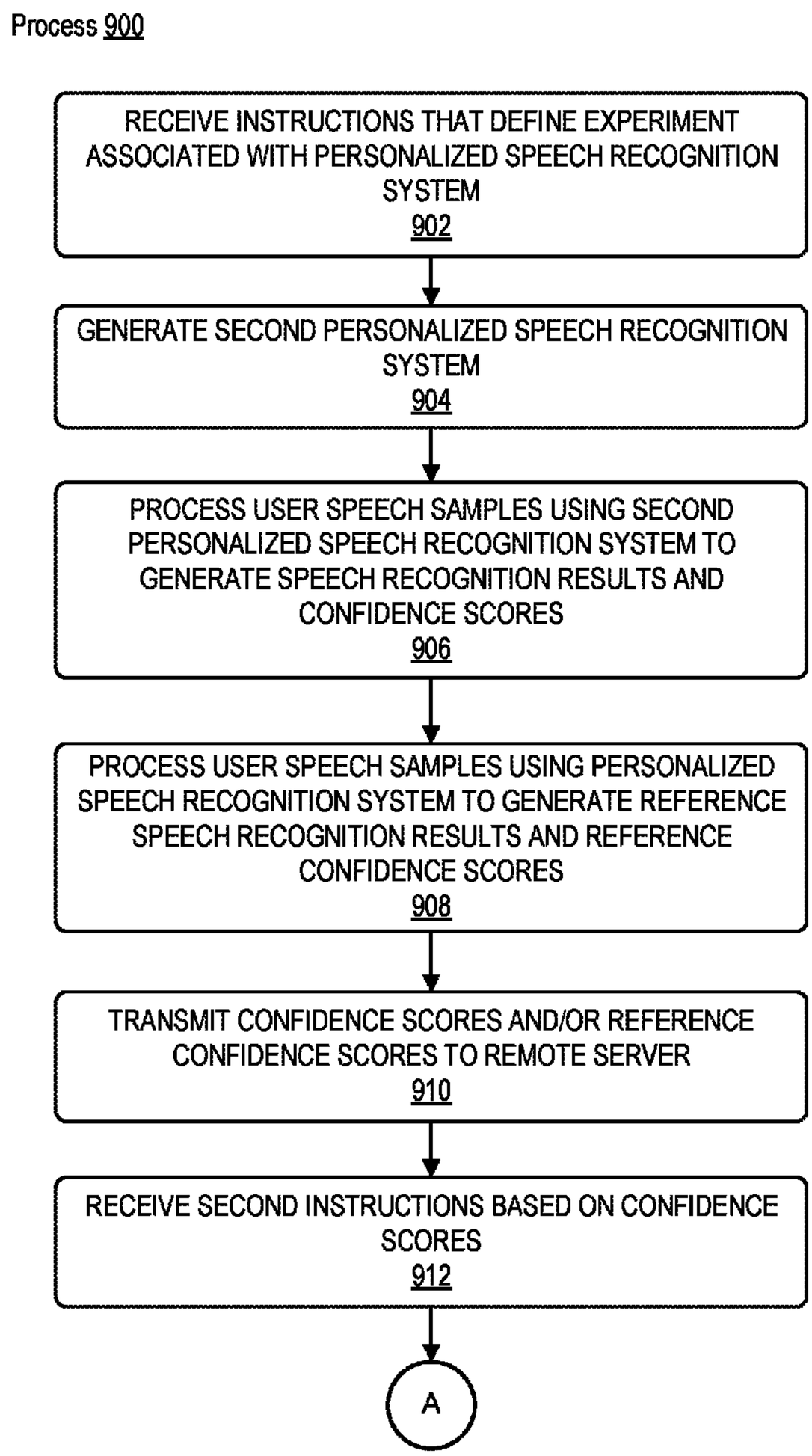
Process 900
RECEIVE INSTRUCTIONS THAT DEFINE EXPERIMENT ASSOCIATED WITH PERSONALIZED SPEECH RECOGNITION SYSTEM
902
GENERATE SECOND PERSONALIZED SPEECH RECOGNITION SYSTEM
904
PROCESS USER SPEECH SAMPLES USING SECOND PERSONALIZED SPEECH RECOGNITION SYSTEM TO GENERATE SPEECH RECOGNITION RESULTS AND CONFIDENCE SCORES
906
PROCESS USER SPEECH SAMPLES USING PERSONALIZED SPEECH RECOGNITION SYSTEM TO GENERATE REFERENCE SPEECH RECOGNITION RESULTS AND REFERENCE CONFIDENCE SCORES
908
TRANSMIT CONFIDENCE SCORES AND/OR REFERENCE CONFIDENCE SCORES TO REMOTE SERVER
910
RECEIVE SECOND INSTRUCTIONS BASED ON CONFIDENCE SCORES
912
A

FIG. 9A

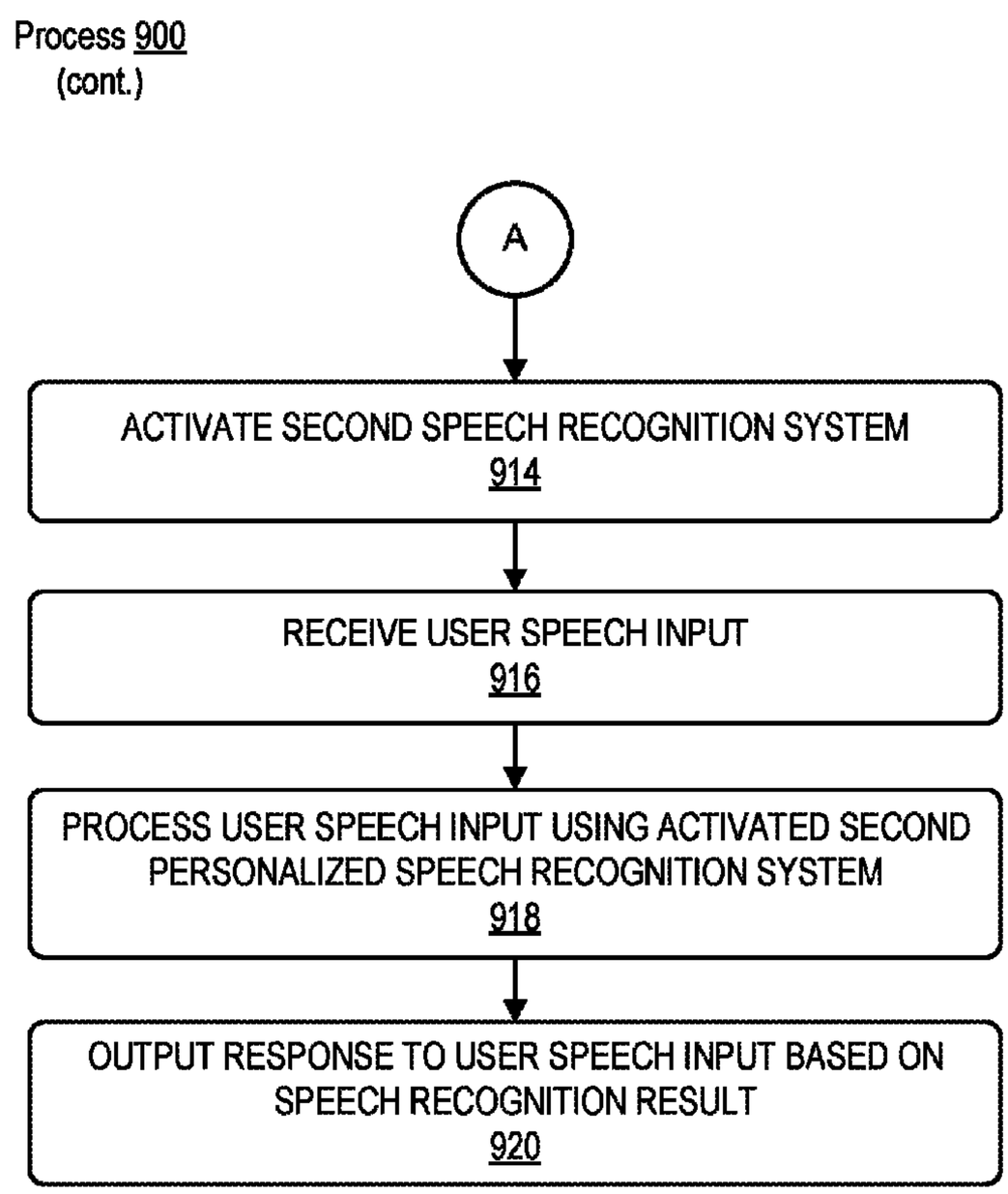
Process 900
(cont.)
A
ACTIVATE SECOND SPEECH RECOGNITION SYSTEM
914
RECEIVE USER SPEECH INPUT
916
PROCESS USER SPEECH INPUT USING ACTIVATED SECOND PERSONALIZED SPEECH RECOGNITION SYSTEM
918
OUTPUT RESPONSE TO USER SPEECH INPUT BASED ON SPEECH RECOGNITION RESULT
920

FIG. 9B

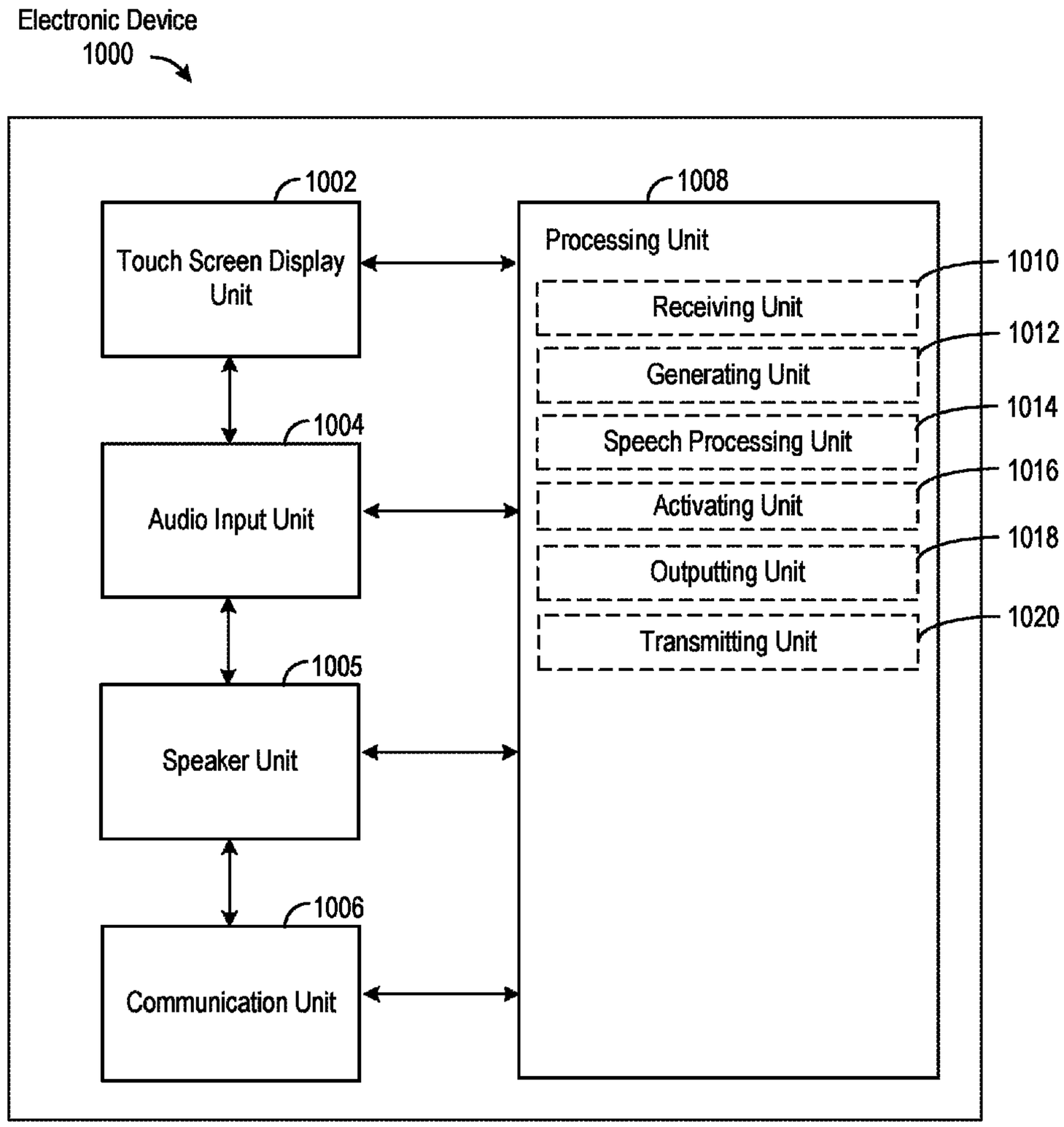
Electronic Device
1000
1002
Touch Screen Display Unit
1004
Audio Input Unit
1005
Speaker Unit
1006
Communication Unit
1008
Processing Unit
Receiving Unit
Generating Unit
Speech Processing Unit
Activating Unit
Outputting Unit
Transmitting Unit
1010
1012
1014
1016
1018
1020

FIG. 10

PRIVACY PRESERVING DISTRIBUTED EVALUATION FRAMEWORK FOR EMBEDDED PERSONALIZED SYSTEMS

CROSS-REFERENCE TO RELATED APPLICATIONS

This application claims priority to U.S. Provisional Ser. No. 62/345,401, filed on Jun. 3, 2016, entitled PRIVACY PRESERVING DISTRIBUTED EVALUATION FRAMEWORK FOR EMBEDDED PERSONALIZED SYSTEMS, which is hereby incorporated by reference in its entirety for all purposes.

FIELD

This relates generally to evaluating embedded personalized systems on user devices and, more specifically, to privacy-preserving distributed evaluation frameworks for embedded personalized systems on user devices.

BACKGROUND

Intelligent automated assistants (or digital assistants) can provide a beneficial interface between human users and electronic devices. Such assistants can allow users to interact with devices or systems using natural language in spoken and/or text forms. For example, a user can provide a speech input containing a user request to a digital assistant operating on an electronic device. The digital assistant can interpret the user's intent from the speech input and operationalize the user's intent into tasks. The tasks can then be performed by executing one or more services of the electronic device, and a relevant output responsive to the user request can be returned to the user.

Digital assistants can utilize various statistical systems for processing and responding to user requests. For example, digital assistants can utilize speech recognition systems, machine translation systems, natural language understanding systems, and speech synthesis systems. The accuracy and robustness of these statistical systems can be enhanced through personalization of the systems. In particular, the underlying statistical models utilized by the statistical systems can be tailored towards a specific user by training the statistical models with user data. For example, text input received from a user can be used to generate a personalized language model for a speech recognition system. This can enable the speech recognition system to better recognize unique words or phrases (e.g., specific names or locations) that may be less common in general speech, but frequently used by the user.

Personalizing statistical systems with user data can, however, raise privacy concerns. For example, users may not want their personal attributes or characteristics reflected in the personalized statistical models to be shared with a third party. One solution for preserving the user's privacy can be to embed the personalized statistical systems on the user's device. In particular, the personalized statistical models can be generated and stored on the user's device. Further, the personalized results obtained from the personalized statistical models can remain on the user's device. Third-party access to the user's personal data can thus be restricted, which can preserve the user's privacy. However, such restricted access can make it difficult to evaluate embedded personalized statistical systems. For example, it can be difficult to tune the underlying models and algorithms of the

embedded personalized statistical systems for optimal performance when access the embedded personalized statistical systems is restricted.

SUMMARY

Systems and processes for evaluating embedded personalized systems are provided. In one example process, instructions that define an experiment associated with a personalized speech recognition system can be received. The instructions can define one or more experimental parameters. In accordance with the received instructions, a second personalized speech recognition system can be generated based on the personalized speech recognition system and the one or more experimental parameters. Additionally, the plurality of user speech samples can be processed using the second personalized speech recognition system to generate a plurality of speech recognition results and a plurality of accuracy scores corresponding to the plurality of speech recognition results. Second instructions can be received based on the plurality of accuracy scores. In accordance with the second instructions, the second speech recognition system can be activated. User speech input can be received. The user speech input can be processed using the activated second personalized speech recognition system to generate a speech recognition result. A response to the user speech input can be outputted based on the speech recognition result.

BRIEF DESCRIPTION OF THE DRAWINGS

FIG. **1** is a block diagram illustrating a system and environment for implementing a digital assistant according to various examples.

FIG. **2**A is a block diagram illustrating a portable multifunction device implementing the client-side portion of a digital assistant according to various examples.

FIG. **2**B is a block diagram illustrating exemplary components for event handling according to various examples.

FIG. **3** illustrates a portable multifunction device implementing the client-side portion of a digital assistant according to various examples.

FIG. **4** is a block diagram of an exemplary multifunction device with a display and a touch-sensitive surface according to various examples.

FIG. **5**A illustrates an exemplary user interface for a menu of applications on a portable multifunction device according to various examples.

FIG. **5**B illustrates an exemplary user interface for a multifunction device with a touch-sensitive surface that is separate from the display according to various examples.

FIG. **6**A illustrates a personal electronic device according to various examples.

FIG. **6**B is a block diagram illustrating a personal electronic device according to various examples.

FIG. **7**A is a block diagram illustrating a digital assistant system or a server portion thereof according to various examples.

FIG. **7**B illustrates the functions of the digital assistant shown in FIG. **7**A according to various examples.

FIG. **7**C illustrates a portion of an ontology according to various examples.

FIG. **8** is a block diagram illustrating a system for evaluating embedded personalized systems according to various examples.

FIGS. **9**A-B illustrate a process for evaluating embedded personalized systems according to various examples.

FIG. **10** illustrates a functional block diagram of an electronic device according to various examples.

DETAILED DESCRIPTION

In the following description of examples, reference is made to the accompanying drawings in which it is shown by way of illustration specific examples that can be practiced. It is to be understood that other examples can be used, and structural changes can be made, without departing from the scope of the various examples.

Statistical systems, such as speech recognition systems or natural language understanding systems, can require iterative tuning in order to optimize performance. For example, each tuning iteration requires adjusting one or more parameters in the statistical system and then evaluating the results to determine whether the adjustment improved the performance of the statistical system. As discussed above, access to embedded personalized statistical systems on user devices is restricted to preserve the privacy of the user. Such restricted access can, for example, prevent system developers from evaluating the outcome of adjustments made to the embedded personalized statistical system. This makes it difficult to optimize the performance of embedded personalize statistical systems.

In accordance with some exemplary systems and processes described herein, embedded personalized statistical systems on user devices are evaluated and optimized in a privacy preserving manner. In one such example process, instructions that define an experiment associated with a personalized speech recognition system are received by a user device. The instructions define one or more experimental parameters. In accordance with the received instructions, a second personalized speech recognition system is generated based on the personalized speech recognition system and the one or more experimental parameters. Additionally, the plurality of user speech samples are processed using the second personalized speech recognition system to generate a plurality of speech recognition results and a plurality of accuracy scores corresponding to the plurality of speech recognition results. The plurality of accuracy scores are confidence scores indicating the likelihood of the speech recognition result given the respective user speech sample. The plurality of accuracy scores are sent to a remote server for evaluation. Since the confidence scores are merely likelihood values and contain no personal information, the privacy of the user is preserved. Based on the plurality of accuracy scores, a system developer determines whether the second personalized speech recognition system should be activated. For example, if the plurality of accuracy scores indicate an improvement in the performance of the second personalized speech recognition system over the personalized speech recognition system, the system developer sends second instructions to the user device to activate the second personalized speech recognition system. The second instructions are received by the user device, and, in accordance with the second instructions, the second personalized speech recognition system is activated such that subsequent speech input is processed using the second personalized speech recognition system. By iteratively evaluating experimental parameters in this manner, the personalized speech recognition system on the user device is tuned for optimal performance while still preserving the privacy of the user.

Although the following description uses terms "first," "second," etc. to describe various elements, these elements should not be limited by the terms. These terms are only used to distinguish one element from another. For example, a first speech input could be termed a second speech input, and, similarly, a second speech input could be termed a first speech input, without departing from the scope of the various described examples. The first speech input and the second speech input can both be speech inputs and, in some cases, can be separate and different inputs.

The terminology used in the description of the various described examples herein is for the purpose of describing particular examples only and is not intended to be limiting. As used in the description of the various described examples and the appended claims, the singular forms "a," "an," and "the" are intended to include the plural forms as well, unless the context clearly indicates otherwise. It will also be understood that the term "and/or" as used herein refers to and encompasses any and all possible combinations of one or more of the associated listed items. It will be further understood that the terms "includes," "including," "comprises," and/or "comprising," when used in this specification, specify the presence of stated features, integers, steps, operations, elements, and/or components, but do not preclude the presence or addition of one or more other features, integers, steps, operations, elements, components, and/or groups thereof.

The term "if" may be construed to mean "when" or "upon" or "in response to determining" or "in response to detecting," depending on the context. Similarly, the phrase "if it is determined" or "if [a stated condition or event] is detected" may be construed to mean "upon determining" or "in response to determining" or "upon detecting [the stated condition or event]" or "in response to detecting [the stated condition or event]," depending on the context.

1. System and Environment

FIG. **1** illustrates a block diagram of system **100** according to various examples. In some examples, system **100** can implement a digital assistant. The terms "digital assistant," "virtual assistant," "intelligent automated assistant," or "automatic digital assistant" can refer to any information processing system that interprets natural language input in spoken and/or textual form to infer user intent, and performs actions based on the inferred user intent. For example, to act on an inferred user intent, the system can perform one or more of the following: identifying a task flow with steps and parameters designed to accomplish the inferred user intent, inputting specific requirements from the inferred user intent into the task flow; executing the task flow by invoking programs, methods, services, APIs, or the like; and generating output responses to the user in an audible (e.g., speech) and/or visual form.

Specifically, a digital assistant can be capable of accepting a user request at least partially in the form of a natural language command, request, statement, narrative, and/or inquiry. Typically, the user request can seek either an informational answer or performance of a task by the digital assistant. A satisfactory response to the user request can be a provision of the requested informational answer, a performance of the requested task, or a combination of the two. For example, a user can ask the digital assistant a question, such as "Where am I right now?" Based on the user's current location, the digital assistant can answer, "You are in Central Park near the west gate." The user can also request the performance of a task, for example, "Please invite my friends to my girlfriend's birthday party next week." In response, the digital assistant can acknowledge the request by saying "Yes, right away," and then send a suitable calendar invite on behalf of the user to each of the user's friends listed in the user's electronic address book. During performance of a requested task, the digital assistant can

sometimes interact with the user in a continuous dialogue involving multiple exchanges of information over an extended period of time. There are numerous other ways of interacting with a digital assistant to request information or performance of various tasks. In addition to providing verbal responses and taking programmed actions, the digital assistant can also provide responses in other visual or audio forms, e.g., as text, alerts, music, videos, animations, etc.

As shown in FIG. **1**, in some examples, a digital assistant can be implemented according to a client-server model. The digital assistant can include client-side portion **102** (hereafter "DA client **102**") executed on user device **104** and server-side portion **106** (hereafter "DA server **106**") executed on server system **108**. DA client **102** can communicate with DA server **106** through one or more networks **110**. DA client **102** can provide client-side functionalities such as user-facing input and output processing and communication with DA server **106**. DA server **106** can provide server-side functionalities for any number of DA clients **102** each residing on a respective user device **104**.

In some examples, DA server **106** can include client-facing I/O interface **112**, one or more processing modules **114**, data and models **116**, and I/O interface to external services **118**. The client-facing I/O interface **112** can facilitate the client-facing input and output processing for DA server **106**. One or more processing modules **114** can utilize data and models **116** to process speech input and determine the user's intent based on natural language input. Further, one or more processing modules **114** perform task execution based on inferred user intent. In some examples, DA server **106** can communicate with external services **120** through network(s) **110** for task completion or information acquisition. I/O interface to external services **118** can facilitate such communications.

User device **104** can be any suitable electronic device. For example, user devices can be a portable multifunctional device (e.g., device **200**, described below with reference to FIG. **2**A), a multifunctional device (e.g., device **400**, described below with reference to FIG. **4**), or a personal electronic device (e.g., device **600**, described below with reference to FIG. **6**A-B.) A portable multifunctional device can be, for example, a mobile telephone that also contains other functions, such as PDA and/or music player functions. Specific examples of portable multifunction devices can include the iPhone®, iPod Touch®, and iPad® devices from Apple Inc. of Cupertino, Calif. Other examples of portable multifunction devices can include, without limitation, laptop or tablet computers. Further, in some examples, user device **104** can be a non-portable multifunctional device. In particular, user device **104** can be a desktop computer, a game console, a television, or a television set-top box. In some examples, user device **104** can include a touch-sensitive surface (e.g., touch screen displays and/or touchpads). Further, user device **104** can optionally include one or more other physical user-interface devices, such as a physical keyboard, a mouse, and/or a joystick. Various examples of electronic devices, such as multifunctional devices, are described below in greater detail.

Examples of communication network(s) **110** can include local area networks (LAN) and wide area networks (WAN), e.g., the Internet. Communication network(s) **110** can be implemented using any known network protocol, including various wired or wireless protocols, such as, for example, Ethernet, Universal Serial Bus (USB), FIREWIRE, Global System for Mobile Communications (GSM), Enhanced Data GSM Environment (EDGE), code division multiple access (CDMA), time division multiple access (TDMA), Bluetooth, Wi-Fi, voice over Internet Protocol (VoIP), Wi-MAX, or any other suitable communication protocol.

Server system **108** can be implemented on one or more standalone data processing apparatus or a distributed network of computers. In some examples, server system **108** can also employ various virtual devices and/or services of third-party service providers (e.g., third-party cloud service providers) to provide the underlying computing resources and/or infrastructure resources of server system **108**.

In some examples, user device **104** can communicate with DA server **106** via second user device **122**. Second user device **122** can be similar or identical to user device **104**. For example, second user device **122** can be similar to devices **200**, **400**, or **600** described below with reference to FIGS. **2**A, **4**, and **6**A-B. User device **104** can be configured to communicatively couple to second user device **122** via a direct communication connection, such as Bluetooth, NFC, BTLE, or the like, or via a wired or wireless network, such as a local Wi-Fi network. In some examples, second user device **122** can be configured to act as a proxy between user device **104** and DA server **106**. For example, DA client **102** of user device **104** can be configured to transmit information (e.g., a user request received at user device **104**) to DA server **106** via second user device **122**. DA server **106** can process the information and return relevant data (e.g., data content responsive to the user request) to user device **104** via second user device **122**.

In some examples, user device **104** can be configured to communicate abbreviated requests for data to second user device **122** to reduce the amount of information transmitted from user device **104**. Second user device **122** can be configured to determine supplemental information to add to the abbreviated request to generate a complete request to transmit to DA server **106**. This system architecture can advantageously allow user device **104** having limited communication capabilities and/or limited battery power (e.g., a watch or a similar compact electronic device) to access services provided by DA server **106** by using second user device **122**, having greater communication capabilities and/or battery power (e.g., a mobile phone, laptop computer, tablet computer, or the like), as a proxy to DA server **106**. While only two user devices **104** and **122** are shown in FIG. **1**, it should be appreciated that system **100** can include any number and type of user devices configured in this proxy configuration to communicate with DA server system **106**.

Although the digital assistant shown in FIG. **1** can include both a client-side portion (e.g., DA client **102**) and a server-side portion (e.g., DA server **106**), in some examples, the functions of a digital assistant can be implemented as a standalone application installed on a user device. In addition, the divisions of functionalities between the client and server portions of the digital assistant can vary in different implementations. For instance, in some examples, the DA client can be a thin-client that provides only user-facing input and output processing functions, and delegates all other functionalities of the digital assistant to a backend server.

2. Electronic Devices

Attention is now directed toward embodiments of electronic devices for implementing the client-side portion of a digital assistant. FIG. **2**A is a block diagram illustrating portable multifunction device **200** with touch-sensitive display system **212** in accordance with some embodiments. Touch-sensitive display **212** is sometimes called a "touch screen" for convenience and is sometimes known as or called a "touch-sensitive display system." Device **200** includes memory **202** (which optionally includes one or

more computer-readable storage mediums), memory controller **222**, one or more processing units (CPUs) **220**, peripherals interface **218**, RF circuitry **208**, audio circuitry **210**, speaker **211**, microphone **213**, input/output (I/O) subsystem **206**, other input control devices **216**, and external port **224**. Device **200** optionally includes one or more optical sensors **264**. Device **200** optionally includes one or more contact intensity sensors **265** for detecting intensity of contacts on device **200** (e.g., a touch-sensitive surface such as touch-sensitive display system **212** of device **200**). Device **200** optionally includes one or more tactile output generators **267** for generating tactile outputs on device **200** (e.g., generating tactile outputs on a touch-sensitive surface such as touch-sensitive display system **212** of device **200** or touchpad **455** of device **400**). These components optionally communicate over one or more communication buses or signal lines **203**.

As used in the specification and claims, the term "intensity" of a contact on a touch-sensitive surface refers to the force or pressure (force per unit area) of a contact (e.g., a finger contact) on the touch-sensitive surface, or to a substitute (proxy) for the force or pressure of a contact on the touch-sensitive surface. The intensity of a contact has a range of values that includes at least four distinct values and more typically includes hundreds of distinct values (e.g., at least 256). Intensity of a contact is, optionally, determined (or measured) using various approaches and various sensors or combinations of sensors. For example, one or more force sensors underneath or adjacent to the touch-sensitive surface are, optionally, used to measure force at various points on the touch-sensitive surface. In some implementations, force measurements from multiple force sensors are combined (e.g., a weighted average) to determine an estimated force of a contact. Similarly, a pressure-sensitive tip of a stylus is, optionally, used to determine a pressure of the stylus on the touch-sensitive surface. Alternatively, the size of the contact area detected on the touch-sensitive surface and/or changes thereto, the capacitance of the touch-sensitive surface proximate to the contact and/or changes thereto, and/or the resistance of the touch-sensitive surface proximate to the contact and/or changes thereto are, optionally, used as a substitute for the force or pressure of the contact on the touch-sensitive surface. In some implementations, the substitute measurements for contact force or pressure are used directly to determine whether an intensity threshold has been exceeded (e.g., the intensity threshold is described in units corresponding to the substitute measurements). In some implementations, the substitute measurements for contact force or pressure are converted to an estimated force or pressure, and the estimated force or pressure is used to determine whether an intensity threshold has been exceeded (e.g., the intensity threshold is a pressure threshold measured in units of pressure). Using the intensity of a contact as an attribute of a user input allows for user access to additional device functionality that may otherwise not be accessible by the user on a reduced-size device with limited real estate for displaying affordances (e.g., on a touch-sensitive display) and/or receiving user input (e.g., via a touch-sensitive display, a touch-sensitive surface, or a physical/mechanical control such as a knob or a button).

As used in the specification and claims, the term "tactile output" refers to physical displacement of a device relative to a previous position of the device, physical displacement of a component (e.g., a touch-sensitive surface) of a device relative to another component (e.g., housing) of the device, or displacement of the component relative to a center of mass of the device that will be detected by a user with the user's sense of touch. For example, in situations where the device or the component of the device is in contact with a surface of a user that is sensitive to touch (e.g., a finger, palm, or other part of a user's hand), the tactile output generated by the physical displacement will be interpreted by the user as a tactile sensation corresponding to a perceived change in physical characteristics of the device or the component of the device. For example, movement of a touch-sensitive surface (e.g., a touch-sensitive display or trackpad) is, optionally, interpreted by the user as a "down click" or "up click" of a physical actuator button. In some cases, a user will feel a tactile sensation such as an "down click" or "up click" even when there is no movement of a physical actuator button associated with the touch-sensitive surface that is physically pressed (e.g., displaced) by the user's movements. As another example, movement of the touch-sensitive surface is, optionally, interpreted or sensed by the user as "roughness" of the touch-sensitive surface, even when there is no change in smoothness of the touch-sensitive surface. While such interpretations of touch by a user will be subject to the individualized sensory perceptions of the user, there are many sensory perceptions of touch that are common to a large majority of users. Thus, when a tactile output is described as corresponding to a particular sensory perception of a user (e.g., an "up click," a "down click," "roughness"), unless otherwise stated, the generated tactile output corresponds to physical displacement of the device or a component thereof that will generate the described sensory perception for a typical (or average) user.

It should be appreciated that device **200** is only one example of a portable multifunction device, and that device **200** optionally has more or fewer components than shown, optionally combines two or more components, or optionally has a different configuration or arrangement of the components. The various components shown in FIG. **2**A are implemented in hardware, software, or a combination of both hardware and software, including one or more signal processing and/or application-specific integrated circuits.

Memory **202** may include one or more computer-readable storage mediums. The computer-readable storage mediums may be tangible and non-transitory. Memory **202** may include high-speed random access memory and may also include non-volatile memory, such as one or more magnetic disk storage devices, flash memory devices, or other non-volatile solid-state memory devices. Memory controller **222** may control access to memory **202** by other components of device **200**.

In some examples, a non-transitory computer-readable storage medium of memory **202** can be used to store instructions (e.g., for performing aspects of processes described below) for use by or in connection with an instruction execution system, apparatus, or device, such as a computer-based system, processor-containing system, or other system that can fetch the instructions from the instruction execution system, apparatus, or device and execute the instructions. In other examples, the instructions (e.g., for performing aspects of the processes described below) can be stored on a non-transitory computer-readable storage medium (not shown) of the server system **108** or can be divided between the non-transitory computer-readable storage medium of memory **202** and the non-transitory computer-readable storage medium of server system **108**. In the context of this document, a "non-transitory computer-readable storage medium" can be any medium that can contain or store the program for use by or in connection with the instruction execution system, apparatus, or device.

Peripherals interface **218** can be used to couple input and output peripherals of the device to CPU **220** and memory **202**. The one or more processors **220** run or execute various software programs and/or sets of instructions stored in memory **202** to perform various functions for device **200** and to process data. In some embodiments, peripherals interface **218**, CPU **220**, and memory controller **222** may be implemented on a single chip, such as chip **204**. In some other embodiments, they may be implemented on separate chips.

RF (radio frequency) circuitry **208** receives and sends RF signals, also called electromagnetic signals. RF circuitry **208** converts electrical signals to/from electromagnetic signals and communicates with communications networks and other communications devices via the electromagnetic signals. RF circuitry **208** optionally includes well-known circuitry for performing these functions, including but not limited to an antenna system, an RF transceiver, one or more amplifiers, a tuner, one or more oscillators, a digital signal processor, a CODEC chipset, a subscriber identity module (SIM) card, memory, and so forth. RF circuitry **208** optionally communicates with networks, such as the Internet, also referred to as the World Wide Web (WWW), an intranet and/or a wireless network, such as a cellular telephone network, a wireless local area network (LAN) and/or a metropolitan area network (MAN), and other devices by wireless communication. The RF circuitry **208** optionally includes well-known circuitry for detecting near field communication (NFC) fields, such as by a short-range communication radio. The wireless communication optionally uses any of a plurality of communications standards, protocols, and technologies, including but not limited to Global System for Mobile Communications (GSM), Enhanced Data GSM Environment (EDGE), high-speed downlink packet access (HSDPA), high-speed uplink packet access (HSUPA), Evolution, Data-Only (EV-DO), HSPA, HSPA+, Dual-Cell HSPA (DC-HSPDA), long term evolution (LTE), near field communication (NFC), wideband code division multiple access (W-CDMA), code division multiple access (CDMA), time division multiple access (TDMA), Bluetooth, Bluetooth Low Energy (BTLE), Wireless Fidelity (Wi-Fi) (e.g., IEEE 802.11a, IEEE 802.11b, IEEE 802.11g, IEEE 802.11n, and/or IEEE 802.11ac), voice over Internet Protocol (VoIP), Wi-MAX, a protocol for e mail (e.g., Internet message access protocol (IMAP) and/or post office protocol (POP)), instant messaging (e.g., extensible messaging and presence protocol (XMPP), Session Initiation Protocol for Instant Messaging and Presence Leveraging Extensions (SIMPLE), Instant Messaging and Presence Service (IMPS)), and/or Short Message Service (SMS), or any other suitable communication protocol, including communication protocols not yet developed as of the filing date of this document.

Audio circuitry **210**, speaker **211**, and microphone **213** provide an audio interface between a user and device **200**. Audio circuitry **210** receives audio data from peripherals interface **218**, converts the audio data to an electrical signal, and transmits the electrical signal to speaker **211**. Speaker **211** converts the electrical signal to human-audible sound waves. Audio circuitry **210** also receives electrical signals converted by microphone **213** from sound waves. Audio circuitry **210** converts the electrical signal to audio data and transmits the audio data to peripherals interface **218** for processing. Audio data may be retrieved from and/or transmitted to memory **202** and/or RF circuitry **208** by peripherals interface **218**. In some embodiments, audio circuitry **210** also includes a headset jack (e.g., **312**, FIG. **3**). The headset jack provides an interface between audio circuitry **210** and removable audio input/output peripherals, such as output-only headphones or a headset with both output (e.g., a headphone for one or both ears) and input (e.g., a microphone).

In some examples, audio circuitry **210** can include a buffer (e.g., memory) to store audio data received from peripherals interface **218**. The buffer can also store audio data converted from the electrical signals of microphone **213**. The buffer can be a circular buffer. The circular buffer can be a first-in first-out (FIFO) buffer that continually overwrites its contents. The buffer may be of any size, such as for example 10 or 20 seconds. In some examples, audio circuitry **210** can utilize memory **202** to store audio data.

I/O subsystem **206** couples input/output peripherals on device **200**, such as touch screen **212** and other input control devices **216**, to peripherals interface **218**. I/O subsystem **206** optionally includes display controller **256**, optical sensor controller **258**, intensity sensor controller **259**, haptic feedback controller **261**, and one or more input controllers **260** for other input or control devices. The one or more input controllers **260** receive/send electrical signals from/to other input control devices **216**. The other input control devices **216** optionally include physical buttons (e.g., push buttons, rocker buttons, etc.), dials, slider switches, joysticks, click wheels, and so forth. In some alternate embodiments, input controller(s) **260** are, optionally, coupled to any (or none) of the following: a keyboard, an infrared port, a USB port, and a pointer device such as a mouse. The one or more buttons (e.g., **308**, FIG. **3**) optionally include an up/down button for volume control of speaker **211** and/or microphone **213**. The one or more buttons optionally include a push button (e.g., **306**, FIG. **3**).

A quick press of the push button may disengage a lock of touch screen **212** or begin a process that uses gestures on the touch screen to unlock the device, as described in U.S. patent application Ser. No. 11/322,549, "Unlocking a Device by Performing Gestures on an Unlock Image," filed Dec. 23, 2005, U.S. Pat. No. 7,657,849, which is hereby incorporated by reference in its entirety. A longer press of the push button (e.g., **306**) may turn power to device **200** on or off. The user may be able to customize a functionality of one or more of the buttons. Touch screen **212** is used to implement virtual or soft buttons and one or more soft keyboards.

Touch-sensitive display **212** provides an input interface and an output interface between the device and a user. Display controller **256** receives and/or sends electrical signals from/to touch screen **212**. Touch screen **212** displays visual output to the user. The visual output may include graphics, text, icons, video, and any combination thereof (collectively termed "graphics"). In some embodiments, some or all of the visual output may correspond to user-interface objects.

Touch screen **212** has a touch-sensitive surface, sensor, or set of sensors that accepts input from the user based on haptic and/or tactile contact. Touch screen **212** and display controller **256** (along with any associated modules and/or sets of instructions in memory **202**) detect contact (and any movement or breaking of the contact) on touch screen **212** and convert the detected contact into interaction with user-interface objects (e.g., one or more soft keys, icons, web pages, or images) that are displayed on touch screen **212**. In an exemplary embodiment, a point of contact between touch screen **212** and the user corresponds to a finger of the user.

Touch screen **212** may use LCD (liquid crystal display) technology, LPD (light emitting polymer display) technology, or LED (light emitting diode) technology, although other display technologies may be used in other embodi-

ments. Touch screen **212** and display controller **256** may detect contact and any movement or breaking thereof using any of a plurality of touch sensing technologies now known or later developed, including but not limited to capacitive, resistive, infrared, and surface acoustic wave technologies, as well as other proximity sensor arrays or other elements for determining one or more points of contact with touch screen **212**. In an exemplary embodiment, projected mutual capacitance sensing technology is used, such as that found in the iPhone® and iPod Touch® from Apple Inc. of Cupertino, Calif.

A touch-sensitive display in some embodiments of touch screen **212** may be analogous to the multi-touch sensitive touchpads described in the following U.S. Pat. No. 6,323,846 (Westerman et al.), U.S. Pat. No. 6,570,557 (Westerman et al.), and/or U.S. Pat. No. 6,677,932 (Westerman), and/or U.S. Patent Publication 2002/0015024A1, each of which is hereby incorporated by reference in its entirety. However, touch screen **212** displays visual output from device **200**, whereas touch-sensitive touchpads do not provide visual output.

A touch-sensitive display in some embodiments of touch screen **212** may be as described in the following applications: (1) U.S. patent application Ser. No. 11/381,313, "Multipoint Touch Surface Controller," filed May 2, 2006; (2) U.S. patent application Ser. No. 10/840,862, "Multipoint Touchscreen," filed May 6, 2004; (3) U.S. patent application Ser. No. 10/903,964, "Gestures For Touch Sensitive Input Devices," filed Jul. 30, 2004; (4) U.S. patent application Ser. No. 11/048,264, "Gestures For Touch Sensitive Input Devices," filed Jan. 31, 2005; (5) U.S. patent application Ser. No. 11/038,590, "Mode-Based Graphical User Interfaces For Touch Sensitive Input Devices," filed Jan. 18, 2005; (6) U.S. patent application Ser. No. 11/228,758, "Virtual Input Device Placement On A Touch Screen User Interface," filed Sep. 16, 2005; (7) U.S. patent application Ser. No. 11/228,700, "Operation Of A Computer With A Touch Screen Interface," filed Sep. 16, 2005; (8) U.S. patent application Ser. No. 11/228,737, "Activating Virtual Keys Of A Touch-Screen Virtual Keyboard," filed Sep. 16, 2005; and (9) U.S. patent application Ser. No. 11/367,749, "Multi-Functional Hand-Held Device," filed Mar. 3, 2006. All of these applications are incorporated by reference herein in their entirety.

Touch screen **212** may have a video resolution in excess of 100 dpi. In some embodiments, the touch screen has a video resolution of approximately 160 dpi. The user may make contact with touch screen **212** using any suitable object or appendage, such as a stylus, a finger, and so forth. In some embodiments, the user interface is designed to work primarily with finger-based contacts and gestures, which can be less precise than stylus-based input due to the larger area of contact of a finger on the touch screen. In some embodiments, the device translates the rough finger-based input into a precise pointer/cursor position or command for performing the actions desired by the user.

In some embodiments, in addition to the touch screen, device **200** may include a touchpad (not shown) for activating or deactivating particular functions. In some embodiments, the touchpad is a touch-sensitive area of the device that, unlike the touch screen, does not display visual output. The touchpad may be a touch-sensitive surface that is separate from touch screen **212** or an extension of the touch-sensitive surface formed by the touch screen.

Device **200** also includes power system **262** for powering the various components. Power system **262** may include a power management system, one or more power sources (e.g., battery, alternating current (AC)), a recharging system, a power failure detection circuit, a power converter or inverter, a power status indicator (e.g., a light-emitting diode (LED)) and any other components associated with the generation, management and distribution of power in portable devices.

Device **200** may also include one or more optical sensors **264**. FIG. **2**A shows an optical sensor coupled to optical sensor controller **258** in I/O subsystem **206**. Optical sensor **264** may include charge-coupled device (CCD) or complementary metal-oxide semiconductor (CMOS) phototransistors. Optical sensor **264** receives light from the environment, projected through one or more lenses, and converts the light to data representing an image. In conjunction with imaging module **243** (also called a camera module), optical sensor **264** may capture still images or video. In some embodiments, an optical sensor is located on the back of device **200**, opposite touch screen display **212** on the front of the device so that the touch screen display may be used as a viewfinder for still and/or video image acquisition. In some embodiments, an optical sensor is located on the front of the device so that the user's image may be obtained for video conferencing while the user views the other video conference participants on the touch screen display. In some embodiments, the position of optical sensor **264** can be changed by the user (e.g., by rotating the lens and the sensor in the device housing) so that a single optical sensor **264** may be used along with the touch screen display for both video conferencing and still and/or video image acquisition.

Device **200** optionally also includes one or more contact intensity sensors **265**. FIG. **2**A shows a contact intensity sensor coupled to intensity sensor controller **259** in I/O subsystem **206**. Contact intensity sensor **265** optionally includes one or more piezoresistive strain gauges, capacitive force sensors, electric force sensors, piezoelectric force sensors, optical force sensors, capacitive touch-sensitive surfaces, or other intensity sensors (e.g., sensors used to measure the force (or pressure) of a contact on a touch-sensitive surface). Contact intensity sensor **265** receives contact intensity information (e.g., pressure information or a proxy for pressure information) from the environment. In some embodiments, at least one contact intensity sensor is collocated with, or proximate to, a touch-sensitive surface (e.g., touch-sensitive display system **212**). In some embodiments, at least one contact intensity sensor is located on the back of device **200**, opposite touch screen display **212**, which is located on the front of device **200**.

Device **200** may also include one or more proximity sensors **266**. FIG. **2**A shows proximity sensor **266** coupled to peripherals interface **218**. Alternately, proximity sensor **266** may be coupled to input controller **260** in I/O subsystem **206**. Proximity sensor **266** may perform as described in U.S. patent application Ser. No. 11/241,839, "Proximity Detector In Handheld Device"; Ser. No. 11/240,788, "Proximity Detector In Handheld Device"; Ser. No. 11/620,702, "Using Ambient Light Sensor To Augment Proximity Sensor Output"; Ser. No. 11/586,862, "Automated Response To And Sensing Of User Activity In Portable Devices"; and Ser. No. 11/638,251, "Methods And Systems For Automatic Configuration Of Peripherals," which are hereby incorporated by reference in their entirety. In some embodiments, the proximity sensor turns off and disables touch screen **212** when the multifunction device is placed near the user's ear (e.g., when the user is making a phone call).

Device **200** optionally also includes one or more tactile output generators **267**. FIG. **2**A shows a tactile output generator coupled to haptic feedback controller **261** in I/O subsystem **206**. Tactile output generator **267** optionally

includes one or more electroacoustic devices such as speakers or other audio components and/or electromechanical devices that convert energy into linear motion such as a motor, solenoid, electroactive polymer, piezoelectric actuator, electrostatic actuator, or other tactile output generating component (e.g., a component that converts electrical signals into tactile outputs on the device). Contact intensity sensor **265** receives tactile feedback generation instructions from haptic feedback module **233** and generates tactile outputs on device **200** that are capable of being sensed by a user of device **200**. In some embodiments, at least one tactile output generator is collocated with, or proximate to, a touch-sensitive surface (e.g., touch-sensitive display system **212**) and, optionally, generates a tactile output by moving the touch-sensitive surface vertically (e.g., in/out of a surface of device **200**) or laterally (e.g., back and forth in the same plane as a surface of device **200**). In some embodiments, at least one tactile output generator sensor is located on the back of device **200**, opposite touch screen display **212**, which is located on the front of device **200**.

Device **200** may also include one or more accelerometers **268**. FIG. **2**A shows accelerometer **268** coupled to peripherals interface **218**. Alternately, accelerometer **268** may be coupled to an input controller **260** in I/O subsystem **206**. Accelerometer **268** may perform as described in U.S. Patent Publication No. 20050190059, "Acceleration-based Theft Detection System for Portable Electronic Devices," and U.S. Patent Publication No. 20060017692, "Methods And Apparatuses For Operating A Portable Device Based On An Accelerometer," both of which are incorporated by reference herein in their entirety. In some embodiments, information is displayed on the touch screen display in a portrait view or a landscape view based on an analysis of data received from the one or more accelerometers. Device **200** optionally includes, in addition to accelerometer(s) **268**, a magnetometer (not shown) and a GPS (or GLONASS or other global navigation system) receiver (not shown) for obtaining information concerning the location and orientation (e.g., portrait or landscape) of device **200**.

In some embodiments, the software components stored in memory **202** include operating system **226**, communication module (or set of instructions) **228**, contact/motion module (or set of instructions) **230**, graphics module (or set of instructions) **232**, text input module (or set of instructions) **234**, Global Positioning System (GPS) module (or set of instructions) **235**, Digital Assistant Client Module **229**, and applications (or sets of instructions) **236**. Further, memory **202** can store data and models, such as user data and models **231**. Furthermore, in some embodiments, memory **202** (FIG. **2**A) or **470** (FIG. **4**) stores device/global internal state **257**, as shown in FIGS. **2**A and **4**. Device/global internal state **257** includes one or more of: active application state, indicating which applications, if any, are currently active; display state, indicating what applications, views or other information occupy various regions of touch screen display **212**; sensor state, including information obtained from the device's various sensors and input control devices **216**; and location information concerning the device's location and/or attitude.

Operating system **226** (e.g., Darwin, RTXC, LINUX, UNIX, OS X, iOS, WINDOWS, or an embedded operating system such as VxWorks) includes various software components and/or drivers for controlling and managing general system tasks (e.g., memory management, storage device control, power management, etc.) and facilitates communication between various hardware and software components.

Communication module **228** facilitates communication with other devices over one or more external ports **224** and also includes various software components for handling data received by RF circuitry **208** and/or external port **224**. External port **224** (e.g., Universal Serial Bus (USB), FIREWIRE, etc.) is adapted for coupling directly to other devices or indirectly over a network (e.g., the Internet, wireless LAN, etc.). In some embodiments, the external port is a multi-pin (e.g., 30-pin) connector that is the same as, or similar to and/or compatible with, the 30-pin connector used on iPod® (trademark of Apple Inc.) devices.

Contact/motion module **230** optionally detects contact with touch screen **212** (in conjunction with display controller **256**) and other touch-sensitive devices (e.g., a touchpad or physical click wheel). Contact/motion module **230** includes various software components for performing various operations related to detection of contact, such as determining if contact has occurred (e.g., detecting a finger-down event), determining an intensity of the contact (e.g., the force or pressure of the contact or a substitute for the force or pressure of the contact), determining if there is movement of the contact and tracking the movement across the touch-sensitive surface (e.g., detecting one or more finger-dragging events), and determining if the contact has ceased (e.g., detecting a finger-up event or a break in contact). Contact/motion module **230** receives contact data from the touch-sensitive surface. Determining movement of the point of contact, which is represented by a series of contact data, optionally includes determining speed (magnitude), velocity (magnitude and direction), and/or an acceleration (a change in magnitude and/or direction) of the point of contact. These operations are, optionally, applied to single contacts (e.g., one finger contacts) or to multiple simultaneous contacts (e.g., "multitouch"/multiple finger contacts). In some embodiments, contact/motion module **230** and display controller **256** detect contact on a touchpad.

In some embodiments, contact/motion module **230** uses a set of one or more intensity thresholds to determine whether an operation has been performed by a user (e.g., to determine whether a user has "clicked" on an icon). In some embodiments, at least a subset of the intensity thresholds are determined in accordance with software parameters (e.g., the intensity thresholds are not determined by the activation thresholds of particular physical actuators and can be adjusted without changing the physical hardware of device **200**). For example, a mouse "click" threshold of a trackpad or touch screen display can be set to any of a large range of predefined threshold values without changing the trackpad or touch screen display hardware. Additionally, in some implementations, a user of the device is provided with software settings for adjusting one or more of the set of intensity thresholds (e.g., by adjusting individual intensity thresholds and/or by adjusting a plurality of intensity thresholds at once with a system-level click "intensity" parameter).

Contact/motion module **230** optionally detects a gesture input by a user. Different gestures on the touch-sensitive surface have different contact patterns (e.g., different motions, timings, and/or intensities of detected contacts). Thus, a gesture is, optionally, detected by detecting a particular contact pattern. For example, detecting a finger tap gesture includes detecting a finger-down event followed by detecting a finger-up (liftoff) event at the same position (or substantially the same position) as the finger-down event (e.g., at the position of an icon). As another example, detecting a finger swipe gesture on the touch-sensitive surface includes detecting a finger-down event followed by detecting one or more finger-dragging events, and subsequently followed by detecting a finger-up (liftoff) event.

Graphics module **232** includes various known software components for rendering and displaying graphics on touch screen **212** or other display, including components for changing the visual impact (e.g., brightness, transparency, saturation, contrast, or other visual property) of graphics that are displayed. As used herein, the term "graphics" includes any object that can be displayed to a user, including, without limitation, text, web pages, icons (such as user-interface objects including soft keys), digital images, videos, animations, and the like.

In some embodiments, graphics module **232** stores data representing graphics to be used. Each graphic is, optionally, assigned a corresponding code. Graphics module **232** receives, from applications etc., one or more codes specifying graphics to be displayed along with, if necessary, coordinate data and other graphic property data, and then generates screen image data to output to display controller **256**.

Haptic feedback module **233** includes various software components for generating instructions used by tactile output generator(s) **267** to produce tactile outputs at one or more locations on device **200** in response to user interactions with device **200**.

Text input module **234**, which may be a component of graphics module **232**, provides soft keyboards for entering text in various applications (e.g., contacts **237**, e mail **240**, IM **241**, browser **247**, and any other application that needs text input).

GPS module **235** determines the location of the device and provides this information for use in various applications (e.g., to telephone **238** for use in location-based dialing; to camera **243** as picture/video metadata; and to applications that provide location-based services such as weather widgets, local yellow page widgets, and map/navigation widgets).

Digital assistant client module **229** can include various client-side digital assistant instructions to provide the client-side functionalities of the digital assistant. For example, digital assistant client module **229** can be capable of accepting voice input (e.g., speech input), text input, touch input, and/or gestural input through various user interfaces (e.g., microphone **213**, accelerometer(s) **268**, touch-sensitive display system **212**, optical sensor(s) **229**, other input control devices **216**, etc.) of portable multifunction device **200**. Digital assistant client module **229** can also be capable of providing output in audio (e.g., speech output), visual, and/or tactile forms through various output interfaces (e.g., speaker **211**, touch-sensitive display system **212**, tactile output generator(s) **267**, etc.) of portable multifunction device **200**. For example, output can be provided as voice, sound, alerts, text messages, menus, graphics, videos, animations, vibrations, and/or combinations of two or more of the above. During operation, digital assistant client module **229** can communicate with DA server **106** using RF circuitry **208**.

User data and models **231** can include various data associated with the user (e.g., user-specific vocabulary data, user preference data, user-specified name pronunciations, data from the user's electronic address book, to-do lists, shopping lists, etc.) to provide the client-side functionalities of the digital assistant. Further, user data and models **231** can includes various models (e.g., speech recognition models, statistical language models, natural language processing models, ontology, task flow models, service models, etc.) for processing user input and determining user intent.

In some examples, digital assistant client module **229** can utilize the various sensors, subsystems, and peripheral devices of portable multifunction device **200** to gather additional information from the surrounding environment of the portable multifunction device **200** to establish a context associated with a user, the current user interaction, and/or the current user input. In some examples, digital assistant client module **229** can provide the contextual information or a subset thereof with the user input to DA server **106** to help infer the user's intent. In some examples, the digital assistant can also use the contextual information to determine how to prepare and deliver outputs to the user. Contextual information can be referred to as context data.

In some examples, the contextual information that accompanies the user input can include sensor information, e.g., lighting, ambient noise, ambient temperature, images or videos of the surrounding environment, etc. In some examples, the contextual information can also include the physical state of the device, e.g., device orientation, device location, device temperature, power level, speed, acceleration, motion patterns, cellular signals strength, etc. In some examples, information related to the software state of DA server **106**, e.g., running processes, installed programs, past and present network activities, background services, error logs, resources usage, etc., and of portable multifunction device **200** can be provided to DA server **106** as contextual information associated with a user input.

In some examples, the digital assistant client module **229** can selectively provide information (e.g., user data **231**) stored on the portable multifunction device **200** in response to requests from DA server **106**. In some examples, digital assistant client module **229** can also elicit additional input from the user via a natural language dialogue or other user interfaces upon request by DA server **106**. Digital assistant client module **229** can pass the additional input to DA server **106** to help DA server **106** in intent deduction and/or fulfillment of the user's intent expressed in the user request.

A more detailed description of a digital assistant is described below with reference to FIGS. **7**A-C. It should be recognized that digital assistant client module **229** can include any number of the sub-modules of digital assistant module **726** described below.

Applications **236** may include the following modules (or sets of instructions), or a subset or superset thereof:

- Contacts module **237** (sometimes called an address book or contact list);
- Telephone module **238**;
- Video conference module **239**;
- E-mail client module **240**;
- Instant messaging (IM) module **241**;
- Workout support module **242**;
- Camera module **243** for still and/or video images;
- Image management module **244**;
- Video player module;
- Music player module;
- Browser module **247**;
- Calendar module **248**;
- Widget modules **249**, which may include one or more of: weather widget **249-1**, stocks widget **249-2**, calculator widget **249-3**, alarm clock widget **249-4**, dictionary widget **249-5**, and other widgets obtained by the user, as well as user-created widgets **249-6**;
- Widget creator module **250** for making user-created widgets **249-6**;
- Search module **251**;
- Video and music player module **252**, which merges video player module and music player module;
- Notes module **253**;
- Map module **254**; and/or
- Online video module **255**.

Examples of other applications **236** that may be stored in memory **202** include other word processing applications, other image editing applications, drawing applications, presentation applications, JAVA-enabled applications, encryption, digital rights management, voice recognition, and voice replication.

In conjunction with touch screen **212**, display controller **256**, contact/motion module **230**, graphics module **232**, and text input module **234**, contacts module **237** may be used to manage an address book or contact list (e.g., stored in application internal state **292** of contacts module **237** in memory **202** or memory **470**), including: adding name(s) to the address book; deleting name(s) from the address book; associating telephone number(s), e-mail address(es), physical address(es) or other information with a name; associating an image with a name; categorizing and sorting names; providing telephone numbers or e-mail addresses to initiate and/or facilitate communications by telephone **238**, video conference module **239**, e-mail **240**, or IM **241**; and so forth.

In conjunction with RF circuitry **208**, audio circuitry **210**, speaker **211**, microphone **213**, touch screen **212**, display controller **256**, contact/motion module **230**, graphics module **232**, and text input module **234**, telephone module **238** may be used to enter a sequence of characters corresponding to a telephone number, access one or more telephone numbers in contacts module **237**, modify a telephone number that has been entered, dial a respective telephone number, conduct a conversation, and disconnect or hang up when the conversation is completed. As noted above, the wireless communication may use any of a plurality of communications standards, protocols, and technologies.

In conjunction with RF circuitry **208**, audio circuitry **210**, speaker **211**, microphone **213**, touch screen **212**, display controller **256**, optical sensor **264**, optical sensor controller **258**, contact/motion module **230**, graphics module **232**, text input module **234**, contacts module **237**, and telephone module **238**, video conference module **239** includes executable instructions to initiate, conduct, and terminate a video conference between a user and one or more other participants in accordance with user instructions.

In conjunction with RF circuitry **208**, touch screen **212**, display controller **256**, contact/motion module **230**, graphics module **232**, and text input module **234**, e-mail client module **240** includes executable instructions to create, send, receive, and manage e-mail in response to user instructions. In conjunction with image management module **244**, e-mail client module **240** makes it very easy to create and send e-mails with still or video images taken with camera module **243**.

In conjunction with RF circuitry **208**, touch screen **212**, display controller **256**, contact/motion module **230**, graphics module **232**, and text input module **234**, the instant messaging module **241** includes executable instructions to enter a sequence of characters corresponding to an instant message, to modify previously entered characters, to transmit a respective instant message (for example, using a Short Message Service (SMS) or Multimedia Message Service (MMS) protocol for telephony-based instant messages or using XMPP, SIMPLE, or IMPS for Internet-based instant messages), to receive instant messages, and to view received instant messages. In some embodiments, transmitted and/or received instant messages may include graphics, photos, audio files, video files and/or other attachments as are supported in an MMS and/or an Enhanced Messaging Service (EMS). As used herein, "instant messaging" refers to both telephony-based messages (e.g., messages sent using SMS or MMS) and Internet-based messages (e.g., messages sent using XMPP, SIMPLE, or IMPS).

In conjunction with RF circuitry **208**, touch screen **212**, display controller **256**, contact/motion module **230**, graphics module **232**, text input module **234**, GPS module **235**, map module **254**, and music player module, workout support module **242** includes executable instructions to create workouts (e.g., with time, distance, and/or calorie burning goals); communicate with workout sensors (sports devices); receive workout sensor data; calibrate sensors used to monitor a workout; select and play music for a workout; and display, store, and transmit workout data.

In conjunction with touch screen **212**, display controller **256**, optical sensor(s) **264**, optical sensor controller **258**, contact/motion module **230**, graphics module **232**, and image management module **244**, camera module **243** includes executable instructions to capture still images or video (including a video stream) and store them into memory **202**, modify characteristics of a still image or video, or delete a still image or video from memory **202**.

In conjunction with touch screen **212**, display controller **256**, contact/motion module **230**, graphics module **232**, text input module **234**, and camera module **243**, image management module **244** includes executable instructions to arrange, modify (e.g., edit), or otherwise manipulate, label, delete, present (e.g., in a digital slide show or album), and store still and/or video images.

In conjunction with RF circuitry **208**, touch screen **212**, display controller **256**, contact/motion module **230**, graphics module **232**, and text input module **234**, browser module **247** includes executable instructions to browse the Internet in accordance with user instructions, including searching, linking to, receiving, and displaying web pages or portions thereof, as well as attachments and other files linked to web pages.

In conjunction with RF circuitry **208**, touch screen **212**, display controller **256**, contact/motion module **230**, graphics module **232**, text input module **234**, e-mail client module **240**, and browser module **247**, calendar module **248** includes executable instructions to create, display, modify, and store calendars and data associated with calendars (e.g., calendar entries, to-do lists, etc.) in accordance with user instructions.

In conjunction with RF circuitry **208**, touch screen **212**, display controller **256**, contact/motion module **230**, graphics module **232**, text input module **234**, and browser module **247**, widget modules **249** are mini-applications that may be downloaded and used by a user (e.g., weather widget **249-1**, stocks widget **249-2**, calculator widget **249-3**, alarm clock widget **249-4**, and dictionary widget **249-5**) or created by the user (e.g., user-created widget **249-6**). In some embodiments, a widget includes an HTML (Hypertext Markup Language) file, a CSS (Cascading Style Sheets) file, and a JavaScript file. In some embodiments, a widget includes an XML (Extensible Markup Language) file and a JavaScript file (e.g., Yahoo! Widgets).

In conjunction with RF circuitry **208**, touch screen **212**, display controller **256**, contact/motion module **230**, graphics module **232**, text input module **234**, and browser module **247**, the widget creator module **250** may be used by a user to create widgets (e.g., turning a user-specified portion of a web page into a widget).

In conjunction with touch screen **212**, display controller **256**, contact/motion module **230**, graphics module **232**, and text input module **234**, search module **251** includes executable instructions to search for text, music, sound, image, video, and/or other files in memory **202** that match one or

more search criteria (e.g., one or more user-specified search terms) in accordance with user instructions.

In conjunction with touch screen **212**, display controller **256**, contact/motion module **230**, graphics module **232**, audio circuitry **210**, speaker **211**, RF circuitry **208**, and browser module **247**, video and music player module **252** includes executable instructions that allow the user to download and play back recorded music and other sound files stored in one or more file formats, such as MP3 or AAC files, and executable instructions to display, present, or otherwise play back videos (e.g., on touch screen **212** or on an external, connected display via external port **224**). In some embodiments, device **200** optionally includes the functionality of an MP3 player, such as an iPod (trademark of Apple Inc.).

In conjunction with touch screen **212**, display controller **256**, contact/motion module **230**, graphics module **232**, and text input module **234**, notes module **253** includes executable instructions to create and manage notes, to-do lists, and the like in accordance with user instructions.

In conjunction with RF circuitry **208**, touch screen **212**, display controller **256**, contact/motion module **230**, graphics module **232**, text input module **234**, GPS module **235**, and browser module **247**, map module **254** may be used to receive, display, modify, and store maps and data associated with maps (e.g., driving directions, data on stores and other points of interest at or near a particular location, and other location-based data) in accordance with user instructions.

In conjunction with touch screen **212**, display controller **256**, contact/motion module **230**, graphics module **232**, audio circuitry **210**, speaker **211**, RF circuitry **208**, text input module **234**, e-mail client module **240**, and browser module **247**, online video module **255** includes instructions that allow the user to access, browse, receive (e.g., by streaming and/or download), play back (e.g., on the touch screen or on an external, connected display via external port **224**), send an e-mail with a link to a particular online video, and otherwise manage online videos in one or more file formats, such as H.264. In some embodiments, instant messaging module **241**, rather than e-mail client module **240**, is used to send a link to a particular online video. Additional description of the online video application can be found in U.S. Provisional Patent Application No. 60/936,562, "Portable Multifunction Device, Method, and Graphical User Interface for Playing Online Videos," filed Jun. 20, 2007, and U.S. patent application Ser. No. 11/968,067, "Portable Multifunction Device, Method, and Graphical User Interface for Playing Online Videos," filed Dec. 31, 2007, the contents of which are hereby incorporated by reference in their entirety.

Each of the above-identified modules and applications corresponds to a set of executable instructions for performing one or more functions described above and the methods described in this application (e.g., the computer-implemented methods and other information processing methods described herein). These modules (e.g., sets of instructions) need not be implemented as separate software programs, procedures, or modules, and thus various subsets of these modules may be combined or otherwise rearranged in various embodiments. For example, video player module may be combined with music player module into a single module (e.g., video and music player module **252**, FIG. **2**A). In some embodiments, memory **202** may store a subset of the modules and data structures identified above. Furthermore, memory **202** may store additional modules and data structures not described above.

In some embodiments, device **200** is a device where operation of a predefined set of functions on the device is performed exclusively through a touch screen and/or a touchpad. By using a touch screen and/or a touchpad as the primary input control device for operation of device **200**, the number of physical input control devices (such as push buttons, dials, and the like) on device **200** may be reduced.

The predefined set of functions that are performed exclusively through a touch screen and/or a touchpad optionally include navigation between user interfaces. In some embodiments, the touchpad, when touched by the user, navigates device **200** to a main, home, or root menu from any user interface that is displayed on device **200**. In such embodiments, a "menu button" is implemented using a touchpad. In some other embodiments, the menu button is a physical push button or other physical input control device instead of a touchpad.

FIG. **2**B is a block diagram illustrating exemplary components for event handling in accordance with some embodiments. In some embodiments, memory **202** (FIG. **2**A) or **470** (FIG. **4**) includes event sorter **270** (e.g., in operating system **226**) and a respective application **236-1** (e.g., any of the aforementioned applications **237-251**, **255**, **480-490**).

Event sorter **270** receives event information and determines the application **236-1** and application view **291** of application **236-1** to which to deliver the event information. Event sorter **270** includes event monitor **271** and event dispatcher module **274**. In some embodiments, application **236-1** includes application internal state **292**, which indicates the current application view(s) displayed on touch-sensitive display **212** when the application is active or executing. In some embodiments, device/global internal state **257** is used by event sorter **270** to determine which application(s) is (are) currently active, and application internal state **292** is used by event sorter **270** to determine application views **291** to which to deliver event information.

In some embodiments, application internal state **292** includes additional information, such as one or more of: resume information to be used when application **236-1** resumes execution, user interface state information that indicates information being displayed or that is ready for display by application **236-1**, a state queue for enabling the user to go back to a prior state or view of application **236-1**, and a redo/undo queue of previous actions taken by the user.

Event monitor **271** receives event information from peripherals interface **218**. Event information includes information about a sub-event (e.g., a user touch on touch-sensitive display **212**, as part of a multi-touch gesture). Peripherals interface **218** transmits information it receives from I/O subsystem **206** or a sensor, such as proximity sensor **266**, accelerometer(s) **268**, and/or microphone **213** (through audio circuitry **210**). Information that peripherals interface **218** receives from I/O subsystem **206** includes information from touch-sensitive display **212** or a touch-sensitive surface.

In some embodiments, event monitor **271** sends requests to the peripherals interface **218** at predetermined intervals. In response, peripherals interface **218** transmits event information. In other embodiments, peripherals interface **218** transmits event information only when there is a significant event (e.g., receiving an input above a predetermined noise threshold and/or for more than a predetermined duration).

In some embodiments, event sorter **270** also includes a hit view determination module **272** and/or an active event recognizer determination module **273**.

Hit view determination module **272** provides software procedures for determining where a sub-event has taken place within one or more views when touch-sensitive dis-

play **212** displays more than one view. Views are made up of controls and other elements that a user can see on the display.

Another aspect of the user interface associated with an application is a set of views, sometimes herein called application views or user interface windows, in which information is displayed and touch-based gestures occur. The application views (of a respective application) in which a touch is detected may correspond to programmatic levels within a programmatic or view hierarchy of the application. For example, the lowest level view in which a touch is detected may be called the hit view, and the set of events that are recognized as proper inputs may be determined based, at least in part, on the hit view of the initial touch that begins a touch-based gesture.

Hit view determination module **272** receives information related to sub events of a touch-based gesture. When an application has multiple views organized in a hierarchy, hit view determination module **272** identifies a hit view as the lowest view in the hierarchy which should handle the sub-event. In most circumstances, the hit view is the lowest level view in which an initiating sub-event occurs (e.g., the first sub-event in the sequence of sub-events that form an event or potential event). Once the hit view is identified by the hit view determination module **272**, the hit view typically receives all sub-events related to the same touch or input source for which it was identified as the hit view.

Active event recognizer determination module **273** determines which view or views within a view hierarchy should receive a particular sequence of sub-events. In some embodiments, active event recognizer determination module **273** determines that only the hit view should receive a particular sequence of sub-events. In other embodiments, active event recognizer determination module **273** determines that all views that include the physical location of a sub-event are actively involved views, and therefore determines that all actively involved views should receive a particular sequence of sub-events. In other embodiments, even if touch sub-events were entirely confined to the area associated with one particular view, views higher in the hierarchy would still remain as actively involved views.

Event dispatcher module **274** dispatches the event information to an event recognizer (e.g., event recognizer **280**). In embodiments including active event recognizer determination module **273**, event dispatcher module **274** delivers the event information to an event recognizer determined by active event recognizer determination module **273**. In some embodiments, event dispatcher module **274** stores in an event queue the event information, which is retrieved by a respective event receiver **282**.

In some embodiments, operating system **226** includes event sorter **270**. Alternatively, application **236-1** includes event sorter **270**. In yet other embodiments, event sorter **270** is a stand-alone module, or a part of another module stored in memory **202**, such as contact/motion module **230**.

In some embodiments, application **236-1** includes a plurality of event handlers **290** and one or more application views **291**, each of which includes instructions for handling touch events that occur within a respective view of the application's user interface. Each application view **291** of the application **236-1** includes one or more event recognizers **280**. Typically, a respective application view **291** includes a plurality of event recognizers **280**. In other embodiments, one or more of event recognizers **280** are part of a separate module, such as a user interface kit (not shown) or a higher level object from which application **236-1** inherits methods and other properties. In some embodiments, a respective event handler **290** includes one or more of: data updater **276**, object updater **277**, GUI updater **278**, and/or event data **279** received from event sorter **270**. Event handler **290** may utilize or call data updater **276**, object updater **277**, or GUI updater **278** to update the application internal state **292**. Alternatively, one or more of the application views **291** include one or more respective event handlers **290**. Also, in some embodiments, one or more of data updater **276**, object updater **277**, and GUI updater **278** are included in a respective application view **291**.

A respective event recognizer **280** receives event information (e.g., event data **279**) from event sorter **270** and identifies an event from the event information. Event recognizer **280** includes event receiver **282** and event comparator **284**. In some embodiments, event recognizer **280** also includes at least a subset of: metadata **283**, and event delivery instructions **288** (which may include sub-event delivery instructions).

Event receiver **282** receives event information from event sorter **270**. The event information includes information about a sub-event, for example, a touch or a touch movement. Depending on the sub-event, the event information also includes additional information, such as location of the sub-event. When the sub-event concerns motion of a touch, the event information may also include speed and direction of the sub-event. In some embodiments, events include rotation of the device from one orientation to another (e.g., from a portrait orientation to a landscape orientation, or vice versa), and the event information includes corresponding information about the current orientation (also called device attitude) of the device.

Event comparator **284** compares the event information to predefined event or sub-event definitions and, based on the comparison, determines an event or sub event, or determines or updates the state of an event or sub-event. In some embodiments, event comparator **284** includes event definitions **286**. Event definitions **286** contain definitions of events (e.g., predefined sequences of sub-events), for example, event **1** (**287-1**), event **2** (**287-2**), and others. In some embodiments, sub-events in an event (**287**) include, for example, touch begin, touch end, touch movement, touch cancellation, and multiple touching. In one example, the definition for event **1** (**287-1**) is a double tap on a displayed object. The double tap, for example, comprises a first touch (touch begin) on the displayed object for a predetermined phase, a first liftoff (touch end) for a predetermined phase, a second touch (touch begin) on the displayed object for a predetermined phase, and a second liftoff (touch end) for a predetermined phase. In another example, the definition for event **2** (**287-2**) is a dragging on a displayed object. The dragging, for example, comprises a touch (or contact) on the displayed object for a predetermined phase, a movement of the touch across touch-sensitive display **212**, and liftoff of the touch (touch end). In some embodiments, the event also includes information for one or more associated event handlers **290**.

In some embodiments, event definition **287** includes a definition of an event for a respective user-interface object. In some embodiments, event comparator **284** performs a hit test to determine which user-interface object is associated with a sub-event. For example, in an application view in which three user-interface objects are displayed on touch-sensitive display **212**, when a touch is detected on touch-sensitive display **212**, event comparator **284** performs a hit test to determine which of the three user-interface objects is associated with the touch (sub-event). If each displayed object is associated with a respective event handler **290**, the

event comparator uses the result of the hit test to determine which event handler **290** should be activated. For example, event comparator **284** selects an event handler associated with the sub-event and the object triggering the hit test.

In some embodiments, the definition for a respective event (**287**) also includes delayed actions that delay delivery of the event information until after it has been determined whether the sequence of sub-events does or does not correspond to the event recognizer's event type.

When a respective event recognizer **280** determines that the series of sub-events do not match any of the events in event definitions **286**, the respective event recognizer **280** enters an event impossible, event failed, or event ended state, after which it disregards subsequent sub-events of the touch-based gesture. In this situation, other event recognizers, if any, that remain active for the hit view continue to track and process sub-events of an ongoing touch-based gesture.

In some embodiments, a respective event recognizer **280** includes metadata **283** with configurable properties, flags, and/or lists that indicate how the event delivery system should perform sub-event delivery to actively involved event recognizers. In some embodiments, metadata **283** includes configurable properties, flags, and/or lists that indicate how event recognizers may interact, or are enabled to interact, with one another. In some embodiments, metadata **283** includes configurable properties, flags, and/or lists that indicate whether sub-events are delivered to varying levels in the view or programmatic hierarchy.

In some embodiments, a respective event recognizer **280** activates event handler **290** associated with an event when one or more particular sub-events of an event are recognized. In some embodiments, a respective event recognizer **280** delivers event information associated with the event to event handler **290**. Activating an event handler **290** is distinct from sending (and deferred sending) sub-events to a respective hit view. In some embodiments, event recognizer **280** throws a flag associated with the recognized event, and event handler **290** associated with the flag catches the flag and performs a predefined process.

In some embodiments, event delivery instructions **288** include sub-event delivery instructions that deliver event information about a sub-event without activating an event handler. Instead, the sub-event delivery instructions deliver event information to event handlers associated with the series of sub-events or to actively involved views. Event handlers associated with the series of sub-events or with actively involved views receive the event information and perform a predetermined process.

In some embodiments, data updater **276** creates and updates data used in application **236-1**. For example, data updater **276** updates the telephone number used in contacts module **237**, or stores a video file used in video player module. In some embodiments, object updater **277** creates and updates objects used in application **236-1**. For example, object updater **277** creates a new user-interface object or updates the position of a user-interface object. GUI updater **278** updates the GUI. For example, GUI updater **278** prepares display information and sends it to graphics module **232** for display on a touch-sensitive display.

In some embodiments, event handler(s) **290** includes or has access to data updater **276**, object updater **277**, and GUI updater **278**. In some embodiments, data updater **276**, object updater **277**, and GUI updater **278** are included in a single module of a respective application **236-1** or application view **291**. In other embodiments, they are included in two or more software modules.

It shall be understood that the foregoing discussion regarding event handling of user touches on touch-sensitive displays also applies to other forms of user inputs to operate multifunction devices **200** with input devices, not all of which are initiated on touch screens. For example, mouse movement and mouse button presses, optionally coordinated with single or multiple keyboard presses or holds; contact movements such as taps, drags, scrolls, etc. on touchpads; pen stylus inputs; movement of the device; oral instructions; detected eye movements; biometric inputs; and/or any combination thereof are optionally utilized as inputs corresponding to sub-events which define an event to be recognized.

FIG. **3** illustrates a portable multifunction device **200** having a touch screen **212** in accordance with some embodiments. The touch screen optionally displays one or more graphics within user interface (UI) **300**. In this embodiment, as well as others described below, a user is enabled to select one or more of the graphics by making a gesture on the graphics, for example, with one or more fingers **302** (not drawn to scale in the figure) or one or more styluses **303** (not drawn to scale in the figure). In some embodiments, selection of one or more graphics occurs when the user breaks contact with the one or more graphics. In some embodiments, the gesture optionally includes one or more taps, one or more swipes (from left to right, right to left, upward and/or downward), and/or a rolling of a finger (from right to left, left to right, upward and/or downward) that has made contact with device **200**. In some implementations or circumstances, inadvertent contact with a graphic does not select the graphic. For example, a swipe gesture that sweeps over an application icon optionally does not select the corresponding application when the gesture corresponding to selection is a tap.

Device **200** may also include one or more physical buttons, such as "home" or menu button **304**. As described previously, menu button **304** may be used to navigate to any application **236** in a set of applications that may be executed on device **200**. Alternatively, in some embodiments, the menu button is implemented as a soft key in a GUI displayed on touch screen **212**.

In one embodiment, device **200** includes touch screen **212**, menu button **304**, push button **306** for powering the device on/off and locking the device, volume adjustment button(s) **308**, subscriber identity module (SIM) card slot **310**, headset jack **312**, and docking/charging external port **224**. Push button **306** is, optionally, used to turn the power on/off on the device by depressing the button and holding the button in the depressed state for a predefined time interval; to lock the device by depressing the button and releasing the button before the predefined time interval has elapsed; and/or to unlock the device or initiate an unlock process. In an alternative embodiment, device **200** also accepts verbal input for activation or deactivation of some functions through microphone **213**. Device **200** also, optionally, includes one or more contact intensity sensors **265** for detecting intensity of contacts on touch screen **212** and/or one or more tactile output generators **267** for generating tactile outputs for a user of device **200**.

FIG. **4** is a block diagram of an exemplary multifunction device with a display and a touch-sensitive surface in accordance with some embodiments. Device **400** need not be portable. In some embodiments, device **400** is a laptop computer, a desktop computer, a tablet computer, a multimedia player device, a navigation device, an educational device (such as a child's learning toy), a gaming system, or a control device (e.g., a home or industrial controller). Device **400** typically includes one or more processing units

(CPUs) **410**, one or more network or other communications interfaces **460**, memory **470**, and one or more communication buses **420** for interconnecting these components. Communication buses **420** optionally include circuitry (sometimes called a chipset) that interconnects and controls communications between system components. Device **400** includes input/output (I/O) interface **430** comprising display **440**, which is typically a touch screen display. I/O interface **430** also optionally includes a keyboard and/or mouse (or other pointing device) **450** and touchpad **455**, tactile output generator **457** for generating tactile outputs on device **400** (e.g., similar to tactile output generator(s) **267** described above with reference to FIG. **2**A), sensors **459** (e.g., optical, acceleration, proximity, touch-sensitive, and/or contact intensity sensors similar to contact intensity sensor(s) **265** described above with reference to FIG. **2**A). Memory **470** includes high-speed random access memory, such as DRAM, SRAM, DDR RAM, or other random access solid state memory devices; and optionally includes non-volatile memory, such as one or more magnetic disk storage devices, optical disk storage devices, flash memory devices, or other non-volatile solid state storage devices. Memory **470** optionally includes one or more storage devices remotely located from CPU(s) **410**. In some embodiments, memory **470** stores programs, modules, and data structures analogous to the programs, modules, and data structures stored in memory **202** of portable multifunction device **200** (FIG. **2**A), or a subset thereof. Furthermore, memory **470** optionally stores additional programs, modules, and data structures not present in memory **202** of portable multifunction device **200**. For example, memory **470** of device **400** optionally stores drawing module **480**, presentation module **482**, word processing module **484**, website creation module **486**, disk authoring module **488**, and/or spreadsheet module **490**, while memory **202** of portable multifunction device **200** (FIG. **2**A) optionally does not store these modules.

Each of the above-identified elements in FIG. **4** may be stored in one or more of the previously mentioned memory devices. Each of the above-identified modules corresponds to a set of instructions for performing a function described above. The above-identified modules or programs (e.g., sets of instructions) need not be implemented as separate software programs, procedures, or modules, and thus various subsets of these modules may be combined or otherwise rearranged in various embodiments. In some embodiments, memory **470** may store a subset of the modules and data structures identified above. Furthermore, memory **470** may store additional modules and data structures not described above.

Attention is now directed towards embodiments of user interfaces that may be implemented on, for example, portable multifunction device **200**.

FIG. **5**A illustrates an exemplary user interface for a menu of applications on portable multifunction device **200** in accordance with some embodiments. Similar user interfaces may be implemented on device **400**. In some embodiments, user interface **500** includes the following elements, or a subset or superset thereof:

Signal strength indicator(s) **502** for wireless communication(s), such as cellular and Wi-Fi signals;

Time **504**;

Bluetooth indicator **505**;

Battery status indicator **506**;

Tray **508** with icons for frequently used applications, such as:

- Icon **516** for telephone module **238**, labeled "Phone," which optionally includes an indicator **514** of the number of missed calls or voicemail messages;
- Icon **518** for e-mail client module **240**, labeled "Mail," which optionally includes an indicator **510** of the number of unread e-mails;
- Icon **520** for browser module **247**, labeled "Browser;" and
- Icon **522** for video and music player module **252**, also referred to as iPod (trademark of Apple Inc.) module **252**, labeled "iPod;" and

Icons for other applications, such as:

- Icon **524** for IM module **241**, labeled "Messages;"
- Icon **526** for calendar module **248**, labeled "Calendar;"
- Icon **528** for image management module **244**, labeled "Photos;"
- Icon **530** for camera module **243**, labeled "Camera;"
- Icon **532** for online video module **255**, labeled "Online Video;"
- Icon **534** for stocks widget **249-2**, labeled "Stocks;"
- Icon **536** for map module **254**, labeled "Maps;"
- Icon **538** for weather widget **249-1**, labeled "Weather;"
- Icon **540** for alarm clock widget **249-4**, labeled "Clock;"
- Icon **542** for workout support module **242**, labeled "Workout Support;"
- Icon **544** for notes module **253**, labeled "Notes;" and
- Icon **546** for a settings application or module, labeled "Settings," which provides access to settings for device **200** and its various applications **236**.

It should be noted that the icon labels illustrated in FIG. **5**A are merely exemplary. For example, icon **522** for video and music player module **252** may optionally be labeled "Music" or "Music Player." Other labels are, optionally, used for various application icons. In some embodiments, a label for a respective application icon includes a name of an application corresponding to the respective application icon. In some embodiments, a label for a particular application icon is distinct from a name of an application corresponding to the particular application icon.

FIG. **5**B illustrates an exemplary user interface on a device (e.g., device **400**, FIG. **4**) with a touch-sensitive surface **551** (e.g., a tablet or touchpad **455**, FIG. **4**) that is separate from the display **550** (e.g., touch screen display **212**). Device **400** also, optionally, includes one or more contact intensity sensors (e.g., one or more of sensors **457**) for detecting intensity of contacts on touch-sensitive surface **551** and/or one or more tactile output generators **459** for generating tactile outputs for a user of device **400**.

Although some of the examples which follow will be given with reference to inputs on touch screen display **212** (where the touch-sensitive surface and the display are combined), in some embodiments, the device detects inputs on a touch-sensitive surface that is separate from the display, as shown in FIG. **5**B. In some embodiments, the touch-sensitive surface (e.g., **551** in FIG. **5**B) has a primary axis (e.g., **552** in FIG. **5**B) that corresponds to a primary axis (e.g., **553** in FIG. **5**B) on the display (e.g., **550**). In accordance with these embodiments, the device detects contacts (e.g., **560** and **562** in FIG. **5**B) with the touch-sensitive surface **551** at locations that correspond to respective locations on the display (e.g., in FIG. **5**B, **560** corresponds to **568** and **562** corresponds to **570**). In this way, user inputs (e.g., contacts **560** and **562**, and movements thereof) detected by the device on the touch-sensitive surface (e.g., **551** in FIG. **5**B) are used by the device to manipulate the user interface on the display (e.g., **550** in FIG. **5**B) of the multifunction device when the

touch-sensitive surface is separate from the display. It should be understood that similar methods are, optionally, used for other user interfaces described herein.

Additionally, while the following examples are given primarily with reference to finger inputs (e.g., finger contacts, finger tap gestures, finger swipe gestures), it should be understood that, in some embodiments, one or more of the finger inputs are replaced with input from another input device (e.g., a mouse-based input or stylus input). For example, a swipe gesture is, optionally, replaced with a mouse click (e.g., instead of a contact) followed by movement of the cursor along the path of the swipe (e.g., instead of movement of the contact). As another example, a tap gesture is, optionally, replaced with a mouse click while the cursor is located over the location of the tap gesture (e.g., instead of detection of the contact followed by ceasing to detect the contact). Similarly, when multiple user inputs are simultaneously detected, it should be understood that multiple computer mice are, optionally, used simultaneously, or a mouse and finger contacts are, optionally, used simultaneously.

FIG. **6**A illustrates exemplary personal electronic device **600**. Device **600** includes body **602**. In some embodiments, device **600** can include some or all of the features described with respect to devices **200** and **400** (e.g., FIGS. **2**A-**4**B). In some embodiments, device **600** has touch-sensitive display screen **604**, hereafter touch screen **604**. Alternatively, or in addition to touch screen **604**, device **600** has a display and a touch-sensitive surface. As with devices **200** and **400**, in some embodiments, touch screen **604** (or the touch-sensitive surface) may have one or more intensity sensors for detecting intensity of contacts (e.g., touches) being applied. The one or more intensity sensors of touch screen **604** (or the touch-sensitive surface) can provide output data that represents the intensity of touches. The user interface of device **600** can respond to touches based on their intensity, meaning that touches of different intensities can invoke different user interface operations on device **600**.

Techniques for detecting and processing touch intensity may be found, for example, in related applications: International Patent Application Serial No. PCT/US2013/040061, titled "Device, Method, and Graphical User Interface for Displaying User Interface Objects Corresponding to an Application," filed May 8, 2013, and International Patent Application Serial No. PCT/US2013/069483, titled "Device, Method, and Graphical User Interface for Transitioning Between Touch Input to Display Output Relationships," filed Nov. 11, 2013, each of which is hereby incorporated by reference in their entirety.

In some embodiments, device **600** has one or more input mechanisms **606** and **608**. Input mechanisms **606** and **608**, if included, can be physical. Examples of physical input mechanisms include push buttons and rotatable mechanisms. In some embodiments, device **600** has one or more attachment mechanisms. Such attachment mechanisms, if included, can permit attachment of device **600** with, for example, hats, eyewear, earrings, necklaces, shirts, jackets, bracelets, watch straps, chains, trousers, belts, shoes, purses, backpacks, and so forth. These attachment mechanisms may permit device **600** to be worn by a user.

FIG. **6**B depicts exemplary personal electronic device **600**. In some embodiments, device **600** can include some or all of the components described with respect to FIGS. **2**A, **2**B, and **4**. Device **600** has bus **612** that operatively couples I/O section **614** with one or more computer processors **616** and memory **618**. I/O section **614** can be connected to display **604**, which can have touch-sensitive component **622** and, optionally, touch-intensity sensitive component **624**. In addition, I/O section **614** can be connected with communication unit **630** for receiving application and operating system data, using Wi-Fi, Bluetooth, near field communication (NFC), cellular, and/or other wireless communication techniques. Device **600** can include input mechanisms **606** and/or **608**. Input mechanism **606** may be a rotatable input device or a depressible and rotatable input device, for example. Input mechanism **608** may be a button, in some examples.

Input mechanism **608** may be a microphone, in some examples. Personal electronic device **600** can include various sensors, such as GPS sensor **632**, accelerometer **634**, directional sensor **640** (e.g., compass), gyroscope **636**, motion sensor **638**, and/or a combination thereof, all of which can be operatively connected to I/O section **614**.

Memory **618** of personal electronic device **600** can be a non-transitory computer-readable storage medium, for storing computer-executable instructions, which, when executed by one or more computer processors **616**, for example, can cause the computer processors to perform the techniques and processes described below. The computer-executable instructions can also be stored and/or transported within any non-transitory computer-readable storage medium for use by or in connection with an instruction execution system, apparatus, or device, such as a computer-based system, processor-containing system, or other system that can fetch the instructions from the instruction execution system, apparatus, or device and execute the instructions. For purposes of this document, a "non-transitory computer-readable storage medium" can be any medium that can tangibly contain or store computer-executable instructions for use by or in connection with the instruction execution system, apparatus, or device. The non-transitory computer-readable storage medium can include, but is not limited to, magnetic, optical, and/or semiconductor storages. Examples of such storage include magnetic disks, optical discs based on CD, DVD, or Blu-ray technologies, as well as persistent solid-state memory such as flash, solid-state drives, and the like. Personal electronic device **600** is not limited to the components and configuration of FIG. **6**B, but can include other or additional components in multiple configurations.

As used here, the term "affordance" refers to a user-interactive graphical user interface object that may be displayed on the display screen of devices **200**, **400**, and/or **600** (FIGS. **2**, **4**, and **6**). For example, an image (e.g., icon), a button, and text (e.g., hyperlink) may each constitute an affordance.

As used herein, the term "focus selector" refers to an input element that indicates a current part of a user interface with which a user is interacting. In some implementations that include a cursor or other location marker, the cursor acts as a "focus selector" so that when an input (e.g., a press input) is detected on a touch-sensitive surface (e.g., touchpad **455** in FIG. **4** or touch-sensitive surface **551** in FIG. **5**B) while the cursor is over a particular user interface element (e.g., a button, window, slider or other user interface element), the particular user interface element is adjusted in accordance with the detected input. In some implementations that include a touch screen display (e.g., touch-sensitive display system **212** in FIG. **2**A or touch screen **212** in FIG. **5**A) that enables direct interaction with user interface elements on the touch screen display, a detected contact on the touch screen acts as a "focus selector" so that when an input (e.g., a press input by the contact) is detected on the touch screen display at a location of a particular user interface element (e.g., a button, window, slider, or other user interface element), the

particular user interface element is adjusted in accordance with the detected input. In some implementations, focus is moved from one region of a user interface to another region of the user interface without corresponding movement of a cursor or movement of a contact on a touch screen display (e.g., by using a tab key or arrow keys to move focus from one button to another button); in these implementations, the focus selector moves in accordance with movement of focus between different regions of the user interface. Without regard to the specific form taken by the focus selector, the focus selector is generally the user interface element (or contact on a touch screen display) that is controlled by the user so as to communicate the user's intended interaction with the user interface (e.g., by indicating, to the device, the element of the user interface with which the user is intending to interact). For example, the location of a focus selector (e.g., a cursor, a contact, or a selection box) over a respective button while a press input is detected on the touch-sensitive surface (e.g., a touchpad or touch screen) will indicate that the user is intending to activate the respective button (as opposed to other user interface elements shown on a display of the device).

As used in the specification and claims, the term "characteristic intensity" of a contact refers to a characteristic of the contact based on one or more intensities of the contact. In some embodiments, the characteristic intensity is based on multiple intensity samples. The characteristic intensity is, optionally, based on a predefined number of intensity samples, or a set of intensity samples collected during a predetermined time period (e.g., 0.05, 0.1, 0.2, 0.5, 1, 2, 5, 10 seconds) relative to a predefined event (e.g., after detecting the contact, prior to detecting liftoff of the contact, before or after detecting a start of movement of the contact, prior to detecting an end of the contact, before or after detecting an increase in intensity of the contact, and/or before or after detecting a decrease in intensity of the contact). A characteristic intensity of a contact is, optionally based on one or more of: a maximum value of the intensities of the contact, a mean value of the intensities of the contact, an average value of the intensities of the contact, a top 10 percentile value of the intensities of the contact, a value at the half maximum of the intensities of the contact, a value at the 90 percent maximum of the intensities of the contact, or the like. In some embodiments, the duration of the contact is used in determining the characteristic intensity (e.g., when the characteristic intensity is an average of the intensity of the contact over time). In some embodiments, the characteristic intensity is compared to a set of one or more intensity thresholds to determine whether an operation has been performed by a user. For example, the set of one or more intensity thresholds may include a first intensity threshold and a second intensity threshold. In this example, a contact with a characteristic intensity that does not exceed the first threshold results in a first operation, a contact with a characteristic intensity that exceeds the first intensity threshold and does not exceed the second intensity threshold results in a second operation, and a contact with a characteristic intensity that exceeds the second threshold results in a third operation. In some embodiments, a comparison between the characteristic intensity and one or more thresholds is used to determine whether or not to perform one or more operations (e.g., whether to perform a respective operation or forgo performing the respective operation) rather than being used to determine whether to perform a first operation or a second operation.

In some embodiments, a portion of a gesture is identified for purposes of determining a characteristic intensity. For example, a touch-sensitive surface may receive a continuous swipe contact transitioning from a start location and reaching an end location, at which point the intensity of the contact increases. In this example, the characteristic intensity of the contact at the end location may be based on only a portion of the continuous swipe contact, and not the entire swipe contact (e.g., only the portion of the swipe contact at the end location). In some embodiments, a smoothing algorithm may be applied to the intensities of the swipe contact prior to determining the characteristic intensity of the contact. For example, the smoothing algorithm optionally includes one or more of: an unweighted sliding-average smoothing algorithm, a triangular smoothing algorithm, a median filter smoothing algorithm, and/or an exponential smoothing algorithm. In some circumstances, these smoothing algorithms eliminate narrow spikes or dips in the intensities of the swipe contact for purposes of determining a characteristic intensity.

The intensity of a contact on the touch-sensitive surface may be characterized relative to one or more intensity thresholds, such as a contact-detection intensity threshold, a light press intensity threshold, a deep press intensity threshold, and/or one or more other intensity thresholds. In some embodiments, the light press intensity threshold corresponds to an intensity at which the device will perform operations typically associated with clicking a button of a physical mouse or a trackpad. In some embodiments, the deep press intensity threshold corresponds to an intensity at which the device will perform operations that are different from operations typically associated with clicking a button of a physical mouse or a trackpad. In some embodiments, when a contact is detected with a characteristic intensity below the light press intensity threshold (e.g., and above a nominal contact-detection intensity threshold below which the contact is no longer detected), the device will move a focus selector in accordance with movement of the contact on the touch-sensitive surface without performing an operation associated with the light press intensity threshold or the deep press intensity threshold. Generally, unless otherwise stated, these intensity thresholds are consistent between different sets of user interface figures.

An increase of characteristic intensity of the contact from an intensity below the light press intensity threshold to an intensity between the light press intensity threshold and the deep press intensity threshold is sometimes referred to as a "light press" input. An increase of characteristic intensity of the contact from an intensity below the deep press intensity threshold to an intensity above the deep press intensity threshold is sometimes referred to as a "deep press" input. An increase of characteristic intensity of the contact from an intensity below the contact-detection intensity threshold to an intensity between the contact-detection intensity threshold and the light press intensity threshold is sometimes referred to as detecting the contact on the touch-surface. A decrease of characteristic intensity of the contact from an intensity above the contact-detection intensity threshold to an intensity below the contact-detection intensity threshold is sometimes referred to as detecting liftoff of the contact from the touch-surface. In some embodiments, the contact-detection intensity threshold is zero. In some embodiments, the contact-detection intensity threshold is greater than zero.

In some embodiments described herein, one or more operations are performed in response to detecting a gesture that includes a respective press input or in response to detecting the respective press input performed with a respective contact (or a plurality of contacts), where the respective press input is detected based at least in part on detecting an

increase in intensity of the contact (or plurality of contacts) above a press-input intensity threshold. In some embodiments, the respective operation is performed in response to detecting the increase in intensity of the respective contact above the press-input intensity threshold (e.g., a "down stroke" of the respective press input). In some embodiments, the press input includes an increase in intensity of the respective contact above the press-input intensity threshold and a subsequent decrease in intensity of the contact below the press-input intensity threshold, and the respective operation is performed in response to detecting the subsequent decrease in intensity of the respective contact below the press-input threshold (e.g., an "up stroke" of the respective press input).

In some embodiments, the device employs intensity hysteresis to avoid accidental inputs sometimes termed "jitter," where the device defines or selects a hysteresis intensity threshold with a predefined relationship to the press-input intensity threshold (e.g., the hysteresis intensity threshold is X intensity units lower than the press-input intensity threshold or the hysteresis intensity threshold is 75%, 90%, or some reasonable proportion of the press-input intensity threshold). Thus, in some embodiments, the press input includes an increase in intensity of the respective contact above the press-input intensity threshold and a subsequent decrease in intensity of the contact below the hysteresis intensity threshold that corresponds to the press-input intensity threshold, and the respective operation is performed in response to detecting the subsequent decrease in intensity of the respective contact below the hysteresis intensity threshold (e.g., an "up stroke" of the respective press input). Similarly, in some embodiments, the press input is detected only when the device detects an increase in intensity of the contact from an intensity at or below the hysteresis intensity threshold to an intensity at or above the press-input intensity threshold and, optionally, a subsequent decrease in intensity of the contact to an intensity at or below the hysteresis intensity, and the respective operation is performed in response to detecting the press input (e.g., the increase in intensity of the contact or the decrease in intensity of the contact, depending on the circumstances).

For ease of explanation, the descriptions of operations performed in response to a press input associated with a press-input intensity threshold or in response to a gesture including the press input are, optionally, triggered in response to detecting either: an increase in intensity of a contact above the press-input intensity threshold, an increase in intensity of a contact from an intensity below the hysteresis intensity threshold to an intensity above the press-input intensity threshold, a decrease in intensity of the contact below the press-input intensity threshold, and/or a decrease in intensity of the contact below the hysteresis intensity threshold corresponding to the press-input intensity threshold. Additionally, in examples where an operation is described as being performed in response to detecting a decrease in intensity of a contact below the press-input intensity threshold, the operation is, optionally, performed in response to detecting a decrease in intensity of the contact below a hysteresis intensity threshold corresponding to, and lower than, the press-input intensity threshold.

3. Digital Assistant System

FIG. **7**A illustrates a block diagram of digital assistant system **700** in accordance with various examples. In some examples, digital assistant system **700** can be implemented on a standalone computer system. In some examples, digital assistant system **700** can be distributed across multiple computers. In some examples, some of the modules and functions of the digital assistant can be divided into a server portion and a client portion, where the client portion resides on one or more user devices (e.g., devices **104**, **122**, **200**, **400**, or **600**) and communicates with the server portion (e.g., server system **108**) through one or more networks, e.g., as shown in FIG. **1**. In some examples, digital assistant system **700** can be an implementation of server system **108** (and/or DA server **106**) shown in FIG. **1**. It should be noted that digital assistant system **700** is only one example of a digital assistant system, and that digital assistant system **700** can have more or fewer components than shown, may combine two or more components, or may have a different configuration or arrangement of the components. The various components shown in FIG. **7**A can be implemented in hardware, software instructions for execution by one or more processors, firmware, including one or more signal processing and/or application specific integrated circuits, or a combination thereof.

Digital assistant system **700** can include memory **702**, one or more processors **704**, input/output (I/O) interface **706**, and network communications interface **708**. These components can communicate with one another over one or more communication buses or signal lines **710**.

In some examples, memory **702** can include a non-transitory computer-readable medium, such as high-speed random access memory and/or a non-volatile computer-readable storage medium (e.g., one or more magnetic disk storage devices, flash memory devices, or other non-volatile solid-state memory devices).

In some examples, I/O interface **706** can couple input/output devices **716** of digital assistant system **700**, such as displays, keyboards, touch screens, and microphones, to user interface module **722**. I/O interface **706**, in conjunction with user interface module **722**, can receive user inputs (e.g., voice input, keyboard inputs, touch inputs, etc.) and processes them accordingly. In some examples, e.g., when the digital assistant is implemented on a standalone user device, digital assistant system **700** can include any of the components and I/O communication interfaces described with respect to devices **200**, **400**, or **600** in FIGS. **2**A, **4**, **6**A-B, respectively. In some examples, digital assistant system **700** can represent the server portion of a digital assistant implementation, and can interact with the user through a client-side portion residing on a user device (e.g., devices **104**, **200**, **400**, or **600**).

In some examples, the network communications interface **708** can include wired communication port(s) **712** and/or wireless transmission and reception circuitry **714**. The wired communication port(s) can receive and send communication signals via one or more wired interfaces, e.g., Ethernet, Universal Serial Bus (USB), FIREWIRE, etc. The wireless circuitry **714** can receive and send RF signals and/or optical signals from/to communications networks and other communications devices. The wireless communications can use any of a plurality of communications standards, protocols, and technologies, such as GSM, EDGE, CDMA, TDMA, Bluetooth, Wi-Fi, VoIP, Wi-MAX, or any other suitable communication protocol. Network communications interface **708** can enable communication between digital assistant system **700** with networks, such as the Internet, an intranet, and/or a wireless network, such as a cellular telephone network, a wireless local area network (LAN), and/or a metropolitan area network (MAN), and other devices.

In some examples, memory **702**, or the computer-readable storage media of memory **702**, can store programs, modules, instructions, and data structures including all or a subset of:

operating system **718**, communications module **720**, user interface module **722**, one or more applications **724**, and digital assistant module **726**. In particular, memory **702**, or the computer-readable storage media of memory **702**, can store instructions for performing the processes described below. One or more processors **704** can execute these programs, modules, and instructions, and reads/writes from/to the data structures.

Operating system **718** (e.g., Darwin, RTXC, LINUX, UNIX, iOS, OS X, WINDOWS, or an embedded operating system such as VxWorks) can include various software components and/or drivers for controlling and managing general system tasks (e.g., memory management, storage device control, power management, etc.) and facilitates communications between various hardware, firmware, and software components.

Communications module **720** can facilitate communications between digital assistant system **700** with other devices over network communications interface **708**. For example, communications module **720** can communicate with RF circuitry **208** of electronic devices such as devices **200**, **400**, and **600** shown in FIG. **2**A, **4**, **6**A-B, respectively. Communications module **720** can also include various components for handling data received by wireless circuitry **714** and/or wired communications port **712**.

User interface module **722** can receive commands and/or inputs from a user via I/O interface **706** (e.g., from a keyboard, touch screen, pointing device, controller, and/or microphone), and generate user interface objects on a display. User interface module **722** can also prepare and deliver outputs (e.g., speech, sound, animation, text, icons, vibrations, haptic feedback, light, etc.) to the user via the I/O interface **706** (e.g., through displays, audio channels, speakers, touch-pads, etc.).

Applications **724** can include programs and/or modules that are configured to be executed by one or more processors **704**. For example, if the digital assistant system is implemented on a standalone user device, applications **724** can include user applications, such as games, a calendar application, a navigation application, or an email application. If digital assistant system **700** is implemented on a server, applications **724** can include resource management applications, diagnostic applications, or scheduling applications, for example.

Memory **702** can also store digital assistant module **726** (or the server portion of a digital assistant). In some examples, digital assistant module **726** can include the following sub-modules, or a subset or superset thereof: input/output processing module **728**, speech-to-text (STT) processing module **730**, natural language processing module **732**, dialogue flow processing module **734**, task flow processing module **736**, service processing module **738**, and speech synthesis module **740**. Each of these modules can have access to one or more of the following systems or data and models of the digital assistant module **726**, or a subset or superset thereof: ontology **760**, vocabulary index **744**, user data **748**, task flow models **754**, service models **756**, and ASR systems.

In some examples, using the processing modules, data, and models implemented in digital assistant module **726**, the digital assistant can perform at least some of the following: converting speech input into text; identifying a user's intent expressed in a natural language input received from the user; actively eliciting and obtaining information needed to fully infer the user's intent (e.g., by disambiguating words, games, intentions, etc.); determining the task flow for fulfilling the inferred intent; and executing the task flow to fulfill the inferred intent.

In some examples, as shown in FIG. **7**B, I/O processing module **728** can interact with the user through I/O devices **716** in FIG. **7**A or with a user device (e.g., devices **104**, **200**, **400**, or **600**) through network communications interface **708** in FIG. **7**A to obtain user input (e.g., a speech input) and to provide responses (e.g., as speech outputs) to the user input. I/O processing module **728** can optionally obtain contextual information associated with the user input from the user device, along with or shortly after the receipt of the user input. The contextual information can include user-specific data, vocabulary, and/or preferences relevant to the user input. In some examples, the contextual information also includes software and hardware states of the user device at the time the user request is received, and/or information related to the surrounding environment of the user at the time that the user request was received. In some examples, I/O processing module **728** can also send follow-up questions to, and receive answers from, the user regarding the user request. When a user request is received by I/O processing module **728** and the user request can include speech input, I/O processing module **728** can forward the speech input to STT processing module **730** (or speech recognizer) for speech-to-text conversions.

STT processing module **730** can include one or more ASR systems. The one or more ASR systems can process the speech input that is received through I/O processing module **728** to produce a recognition result. Each ASR system can include a front-end speech pre-processor. The front-end speech pre-processor can extract representative features from the speech input. For example, the front-end speech pre-processor can perform a Fourier transform on the speech input to extract spectral features that characterize the speech input as a sequence of representative multi-dimensional vectors. Further, each ASR system can include one or more speech recognition models (e.g., acoustic models and/or language models) and can implement one or more speech recognition engines. Examples of speech recognition models can include Hidden Markov Models, Gaussian-Mixture Models, Deep Neural Network Models, n-gram language models, and other statistical models. Examples of speech recognition engines can include the dynamic time warping based engines and weighted finite-state transducers (WFST) based engines. The one or more speech recognition models and the one or more speech recognition engines can be used to process the extracted representative features of the front-end speech pre-processor to produce intermediate recognitions results (e.g., phonemes, phonemic strings, and sub-words), and ultimately, text recognition results (e.g., words, word strings, or sequence of tokens). In some examples, the speech input can be processed at least partially by a third-party service or on the user's device (e.g., device **104**, **200**, **400**, or **600**) to produce the recognition result. Once STT processing module **730** produces recognition results containing a text string (e.g., words, or sequence of words, or sequence of tokens), the recognition result can be passed to natural language processing module **732** for intent deduction.

More details on the speech-to-text processing are described in U.S. Utility application Ser. No. 13/236,942 for "Consolidating Speech Recognition Results," filed on Sep. 20, 2011, the entire disclosure of which is incorporated herein by reference.

In some examples, STT processing module **730** can include and/or access a vocabulary of recognizable words

via phonetic alphabet conversion module **731**. Each vocabulary word can be associated with one or more candidate pronunciations of the word represented in a speech recognition phonetic alphabet. In particular, the vocabulary of recognizable words can include a word that is associated with a plurality of candidate pronunciations. For example, the vocabulary may include the word "tomato" that is associated with the candidate pronunciations of /tə'meɪroʊ/ and /tə'mɑtoʊ/. Further, vocabulary words can be associated with custom candidate pronunciations that are based on previous speech inputs from the user. Such custom candidate pronunciations can be stored in STT processing module **730** and can be associated with a particular user via the user's profile on the device. In some examples, the candidate pronunciations for words can be determined based on the spelling of the word and one or more linguistic and/or phonetic rules. In some examples, the candidate pronunciations can be manually generated, e.g., based on known canonical pronunciations.

In some examples, the candidate pronunciations can be ranked based on the commonness of the candidate pronunciation. For example, the candidate pronunciation /tə'meɪroʊ/ can be ranked higher than /tə'mɑtoʊ/, because the former is a more commonly used pronunciation (e.g., among all users, for users in a particular geographical region, or for any other appropriate subset of users). In some examples, candidate pronunciations can be ranked based on whether the candidate pronunciation is a custom candidate pronunciation associated with the user. For example, custom candidate pronunciations can be ranked higher than canonical candidate pronunciations. This can be useful for recognizing proper nouns having a unique pronunciation that deviates from canonical pronunciation. In some examples, candidate pronunciations can be associated with one or more speech characteristics, such as geographic origin, nationality, or ethnicity. For example, the candidate pronunciation /tə'meɪroʊ/ can be associated with the United States, whereas the candidate pronunciation /tə'mɑtoʊ/ can be associated with Great Britain. Further, the rank of the candidate pronunciation can be based on one or more characteristics (e.g., geographic origin, nationality, ethnicity, etc.) of the user stored in the user's profile on the device. For example, it can be determined from the user's profile that the user is associated with the United States. Based on the user being associated with the United States, the candidate pronunciation /tə'meɪroʊ/ (associated with the United States) can be ranked higher than the candidate pronunciation /tə'mɑtoʊ/ (associated with Great Britain). In some examples, one of the ranked candidate pronunciations can be selected as a predicted pronunciation (e.g., the most likely pronunciation).

When a speech input is received, STT processing module **730** can be used to determine the phonemes corresponding to the speech input (e.g., using an acoustic model), and then attempt to determine words that match the phonemes (e.g., using a language model). For example, if STT processing module **730** can first identify the sequence of phonemes /tə'meɪroʊ/ corresponding to a portion of the speech input, it can then determine, based on vocabulary index **744**, that this sequence corresponds to the word "tomato."

In some examples, STT processing module **730** can use approximate matching techniques to determine words in an utterance. Thus, for example, the STT processing module **730** can determine that the sequence of phonemes /tə'meɪroʊ/ corresponds to the word "tomato," even if that particular sequence of phonemes is not one of the candidate sequence of phonemes for that word.

Natural language processing module **732** ("natural language processor") of the digital assistant can take the sequence of words or tokens ("token sequence") generated by STT processing module **730**, and attempt to associate the token sequence with one or more "actionable intents" recognized by the digital assistant. An "actionable intent" can represent a task that can be performed by the digital assistant, and can have an associated task flow implemented in task flow models **754**. The associated task flow can be a series of programmed actions and steps that the digital assistant takes in order to perform the task. The scope of a digital assistant's capabilities can be dependent on the number and variety of task flows that have been implemented and stored in task flow models **754**, or in other words, on the number and variety of "actionable intents" that the digital assistant recognizes. The effectiveness of the digital assistant, however, can also be dependent on the assistant's ability to infer the correct "actionable intent(s)" from the user request expressed in natural language.

In some examples, in addition to the sequence of words or tokens obtained from STT processing module **730**, natural language processing module **732** can also receive contextual information associated with the user request, e.g., from I/O processing module **728**. The natural language processing module **732** can optionally use the contextual information to clarify, supplement, and/or further define the information contained in the token sequence received from STT processing module **730**. The contextual information can include, for example, user preferences, hardware, and/or software states of the user device, sensor information collected before, during, or shortly after the user request, prior interactions (e.g., dialogue) between the digital assistant and the user, and the like. As described herein, contextual information can be dynamic, and can change with time, location, content of the dialogue, and other factors.

In some examples, the natural language processing can be based on, e.g., ontology **760**. Ontology **760** can be a hierarchical structure containing many nodes, each node representing either an "actionable intent" or a "property" relevant to one or more of the "actionable intents" or other "properties." As noted above, an "actionable intent" can represent a task that the digital assistant is capable of performing, i.e., it is "actionable" or can be acted on. A "property" can represent a parameter associated with an actionable intent or a sub-aspect of another property. A linkage between an actionable intent node and a property node in ontology **760** can define how a parameter represented by the property node pertains to the task represented by the actionable intent node.

In some examples, ontology **760** can be made up of actionable intent nodes and property nodes. Within ontology **760**, each actionable intent node can be linked to one or more property nodes either directly or through one or more intermediate property nodes. Similarly, each property node can be linked to one or more actionable intent nodes either directly or through one or more intermediate property nodes. For example, as shown in FIG. **7**C, ontology **760** can include a "restaurant reservation" node (i.e., an actionable intent node). Property nodes "restaurant," "date/time" (for the reservation), and "party size" can each be directly linked to the actionable intent node (i.e., the "restaurant reservation" node).

In addition, property nodes "cuisine," "price range," "phone number," and "location" can be sub-nodes of the property node "restaurant," and can each be linked to the "restaurant reservation" node (i.e., the actionable intent node) through the intermediate property node "restaurant." For another example, as shown in FIG. **7**C, ontology **760** can

also include a "set reminder" node (i.e., another actionable intent node). Property nodes "date/time" (for setting the reminder) and "subject" (for the reminder) can each be linked to the "set reminder" node. Since the property "date/time" can be relevant to both the task of making a restaurant reservation and the task of setting a reminder, the property node "date/time" can be linked to both the "restaurant reservation" node and the "set reminder" node in ontology **760**.

An actionable intent node, along with its linked concept nodes, can be described as a "domain." In the present discussion, each domain can be associated with a respective actionable intent, and refers to the group of nodes (and the relationships there between) associated with the particular actionable intent. For example, ontology **760** shown in FIG. **7**C can include an example of restaurant reservation domain **762** and an example of reminder domain **764** within ontology **760**. The restaurant reservation domain includes the actionable intent node "restaurant reservation," property nodes "restaurant," "date/time," and "party size," and sub-property nodes "cuisine," "price range," "phone number," and "location." Reminder domain **764** can include the actionable intent node "set reminder," and property nodes "subject" and "date/time." In some examples, ontology **760** can be made up of many domains. Each domain can share one or more property nodes with one or more other domains. For example, the "date/time" property node can be associated with many different domains (e.g., a scheduling domain, a travel reservation domain, a movie ticket domain, etc.), in addition to restaurant reservation domain **762** and reminder domain **764**.

While FIG. **7**C illustrates two example domains within ontology **760**, other domains can include, for example, "find a movie," "initiate a phone call," "find directions," "schedule a meeting," "send a message," and "provide an answer to a question," "read a list," "providing navigation instructions," "provide instructions for a task" and so on. A "send a message" domain can be associated with a "send a message" actionable intent node, and may further include property nodes such as "recipient(s)," "message type," and "message body." The property node "recipient" can be further defined, for example, by the sub-property nodes such as "recipient name" and "message address."

In some examples, ontology **760** can include all the domains (and hence actionable intents) that the digital assistant is capable of understanding and acting upon. In some examples, ontology **760** can be modified, such as by adding or removing entire domains or nodes, or by modifying relationships between the nodes within the ontology **760**.

In some examples, nodes associated with multiple related actionable intents can be clustered under a "super domain" in ontology **760**. For example, a "travel" super-domain can include a cluster of property nodes and actionable intent nodes related to travel. The actionable intent nodes related to travel can include "airline reservation," "hotel reservation," "car rental," "get directions," "find points of interest," and so on. The actionable intent nodes under the same super domain (e.g., the "travel" super domain) can have many property nodes in common. For example, the actionable intent nodes for "airline reservation," "hotel reservation," "car rental," "get directions," and "find points of interest" can share one or more of the property nodes "start location," "destination," "departure date/time," "arrival date/time," and "party size."

In some examples, each node in ontology **760** can be associated with a set of words and/or phrases that are relevant to the property or actionable intent represented by the node. The respective set of words and/or phrases associated with each node can be the so-called "vocabulary" associated with the node. The respective set of words and/or phrases associated with each node can be stored in vocabulary index **744** in association with the property or actionable intent represented by the node. For example, returning to FIG. **7**B, the vocabulary associated with the node for the property of "restaurant" can include words such as "food," "drinks," "cuisine," "hungry," "eat," "pizza," "fast food," "meal," and so on. For another example, the vocabulary associated with the node for the actionable intent of "initiate a phone call" can include words and phrases such as "call," "phone," "dial," "ring," "call this number," "make a call to," and so on. The vocabulary index **744** can optionally include words and phrases in different languages.

Natural language processing module **732** can receive the token sequence (e.g., a text string) from STT processing module **730**, and determine what nodes are implicated by the words in the token sequence. In some examples, if a word or phrase in the token sequence is found to be associated with one or more nodes in ontology **760** (via vocabulary index **744**), the word or phrase can "trigger" or "activate" those nodes. Based on the quantity and/or relative importance of the activated nodes, natural language processing module **732** can select one of the actionable intents as the task that the user intended the digital assistant to perform. In some examples, the domain that has the most "triggered" nodes can be selected. In some examples, the domain having the highest confidence value (e.g., based on the relative importance of its various triggered nodes) can be selected. In some examples, the domain can be selected based on a combination of the number and the importance of the triggered nodes. In some examples, additional factors are considered in selecting the node as well, such as whether the digital assistant has previously correctly interpreted a similar request from a user.

User data **748** can include user-specific information, such as user-specific vocabulary, user preferences, user address, user's default and secondary languages, user's contact list, and other short-term or long-term information for each user. In some examples, natural language processing module **732** can use the user-specific information to supplement the information contained in the user input to further define the user intent. For example, for a user request "invite my friends to my birthday party," natural language processing module **732** can be able to access user data **748** to determine who the "friends" are and when and where the "birthday party" would be held, rather than requiring the user to provide such information explicitly in his/her request.

Other details of searching an ontology based on a token string is described in U.S. Utility application Ser. No. 12/341,743 for "Method and Apparatus for Searching Using An Active Ontology," filed Dec. 22, 2008, the entire disclosure of which is incorporated herein by reference.

In some examples, once natural language processing module **732** identifies an actionable intent (or domain) based on the user request, natural language processing module **732** can generate a structured query to represent the identified actionable intent. In some examples, the structured query can include parameters for one or more nodes within the domain for the actionable intent, and at least some of the parameters are populated with the specific information and requirements specified in the user request. For example, the user may say "Make me a dinner reservation at a sushi place at **7**." In this case, natural language processing module **732** can be able to correctly identify the actionable intent to be

"restaurant reservation" based on the user input. According to the ontology, a structured query for a "restaurant reservation" domain may include parameters such as {Cuisine}, {Time}, {Date}, {Party Size}, and the like. In some examples, based on the speech input and the text derived from the speech input using STT processing module **730**, natural language processing module **732** can generate a partial structured query for the restaurant reservation domain, where the partial structured query includes the parameters {Cuisine="Sushi"} and {Time="7 pm"}. However, in this example, the user's utterance contains insufficient information to complete the structured query associated with the domain. Therefore, other necessary parameters such as {Party Size} and {Date} may not be specified in the structured query based on the information currently available. In some examples, natural language processing module **732** can populate some parameters of the structured query with received contextual information. For example, in some examples, if the user requested a sushi restaurant "near me," natural language processing module **732** can populate a {location} parameter in the structured query with GPS coordinates from the user device.

In some examples, natural language processing module **732** can pass the generated structured query (including any completed parameters) to task flow processing module **736** ("task flow processor"). Task flow processing module **736** can be configured to receive the structured query from natural language processing module **732**, complete the structured query, if necessary, and perform the actions required to "complete" the user's ultimate request. In some examples, the various procedures necessary to complete these tasks can be provided in task flow models **754**. In some examples, task flow models **754** can include procedures for obtaining additional information from the user and task flows for performing actions associated with the actionable intent.

As described above, in order to complete a structured query, task flow processing module **736** may need to initiate additional dialogue with the user in order to obtain additional information, and/or disambiguate potentially ambiguous utterances. When such interactions are necessary, task flow processing module **736** can invoke dialogue flow processing module **734** to engage in a dialogue with the user. In some examples, dialogue flow processing module **734** can determine how (and/or when) to ask the user for the additional information and receives and processes the user responses. The questions can be provided to and answers can be received from the users through I/O processing module **728**. In some examples, dialogue flow processing module **734** can present dialogue output to the user via audio and/or visual output, and receives input from the user via spoken or physical (e.g., clicking) responses. Continuing with the example above, when task flow processing module **736** invokes dialogue flow processing module **734** to determine the "party size" and "date" information for the structured query associated with the domain "restaurant reservation," dialogue flow processing module **734** can generate questions such as "For how many people?" and "On which day?" to pass to the user. Once answers are received from the user, dialogue flow processing module **734** can then populate the structured query with the missing information, or pass the information to task flow processing module **736** to complete the missing information from the structured query.

Once task flow processing module **736** has completed the structured query for an actionable intent, task flow processing module **736** can proceed to perform the ultimate task associated with the actionable intent. Accordingly, task flow processing module **736** can execute the steps and instructions in the task flow model according to the specific parameters contained in the structured query. For example, the task flow model for the actionable intent of "restaurant reservation" can include steps and instructions for contacting a restaurant and actually requesting a reservation for a particular party size at a particular time. For example, using a structured query such as: {restaurant reservation, restaurant=ABC Café, date=3/12/2012, time=7 pm, party size=5}, task flow processing module **736** can perform the steps of: (1) logging onto a server of the ABC Café or a restaurant reservation system such as OPENTABLE®, (2) entering the date, time, and party size information in a form on the website, (3) submitting the form, and (4) making a calendar entry for the reservation in the user's calendar.

In some examples, task flow processing module **736** can employ the assistance of service processing module **738** ("service processing module") to complete a task requested in the user input or to provide an informational answer requested in the user input. For example, service processing module **738** can act on behalf of task flow processing module **736** to make a phone call, set a calendar entry, invoke a map search, invoke or interact with other user applications installed on the user device, and invoke or interact with third-party services (e.g., a restaurant reservation portal, a social networking website, a banking portal, etc.). In some examples, the protocols and application programming interfaces (API) required by each service can be specified by a respective service model among service models **756**. Service processing module **738** can access the appropriate service model for a service and generate requests for the service in accordance with the protocols and APIs required by the service according to the service model.

For example, if a restaurant has enabled an online reservation service, the restaurant can submit a service model specifying the necessary parameters for making a reservation and the APIs for communicating the values of the necessary parameter to the online reservation service. When requested by task flow processing module **736**, service processing module **738** can establish a network connection with the online reservation service using the web address stored in the service model, and send the necessary parameters of the reservation (e.g., time, date, party size) to the online reservation interface in a format according to the API of the online reservation service.

In some examples, natural language processing module **732**, dialogue flow processing module **734**, and task flow processing module **736** can be used collectively and iteratively to infer and define the user's intent, obtain information to further clarify and refine the user intent, and finally generate a response (i.e., an output to the user, or the completion of a task) to fulfill the user's intent. The generated response can be a dialogue response to the speech input that at least partially fulfills the user's intent. Further, in some examples, the generated response can be output as a speech output. In these examples, the generated response can be sent to speech synthesis module **740** (e.g., speech synthesizer) where it can be processed to synthesize the dialogue response in speech form. In yet other examples, the generated response can be data content relevant to satisfying a user request in the speech input.

Speech synthesis module **740** can be configured to synthesize speech outputs for presentation to the user. Speech synthesis module **740** synthesizes speech outputs based on text provided by the digital assistant. For example, the generated dialogue response can be in the form of a text string. Speech synthesis module **740** can convert the text string to an audible speech output. Speech synthesis module

740 can use any appropriate speech synthesis technique in order to generate speech outputs from text, including, but not limited, to concatenative synthesis, unit selection synthesis, diphone synthesis, domain-specific synthesis, formant synthesis, articulatory synthesis, hidden Markov model (HMM) based synthesis, and sinewave synthesis. In some examples, speech synthesis module **740** can be configured to synthesize individual words based on phonemic strings corresponding to the words. For example, a phonemic string can be associated with a word in the generated dialogue response. The phonemic string can be stored in metadata associated with the word. Speech synthesis model **740** can be configured to directly process the phonemic string in the metadata to synthesize the word in speech form.

In some examples, instead of (or in addition to) using speech synthesis module **740**, speech synthesis can be performed on a remote device (e.g., the server system **108**), and the synthesized speech can be sent to the user device for output to the user. For example, this can occur in some implementations where outputs for a digital assistant are generated at a server system. And because server systems generally have more processing power or resources than a user device, it can be possible to obtain higher quality speech outputs than would be practical with client-side synthesis.

Additional details on digital assistants can be found in the U.S. Utility application Ser. No. 12/987,982, entitled "Intelligent Automated Assistant," filed Jan. 10, 2011, and U.S. Utility application Ser. No. 13/251,088, entitled "Generating and Processing Task Items That Represent Tasks to Perform," filed Sep. 30, 2011, the entire disclosures of which are incorporated herein by reference.

FIG. **8** illustrates system **800** for evaluating embedded personalized systems according to various examples. As shown, system **800** can include distributed evaluation server **806** communicatively coupled to algorithm generating device **808** via I/O interface **818**. Further, distributed evaluation server **806** can be communicatively coupled to user devices **820-826** via network(s) **810**. For simplicity, system **800** is depicted as having only four user devices **820-826**. It should be recognized, though, that system **800** can include any number of user devices **820-826**. For example, distributed evaluation server **806** can be communicatively coupled to a large population of user devices (e.g., greater than 10,000 user devices) in order to evaluate experimental parameters at scale.

Algorithm generating device **808** can be an electronic device (e.g., similar to device **400**) implementing one or more programs for evaluating statistical systems. In some examples, algorithm generating device **808** can be configured to create experimental definitions, to be distributed by distributed evaluation server **806** to participating user devices **820-826**. In one implementation, the experimental definitions can define one or more experimental parameters. The one or more experimental parameters can include personalization parameters that change the behavior of an embedded statistical systems. For example, a personalization parameter can instruct the embedded statistical system to incorporate user-dependent language statistics with a predetermined weighting factor (e.g., 0.3). The user-dependent language statistic can be, for example, derived from user e-mails received at the user device. In other examples, personalization parameters can instruct the embedded statistical system to evaluate its accuracy in a predetermined manner, such as by selecting from one of several evaluation schemes available on the user device. In another implementation, the experimental definition can include one or more programs, implementing novel personalization algorithms and/or novel evaluation schemes. In yet another implementation, the experimental definition can include complete statistical systems or system components (e.g. models, decoders).

A system developer can interact with algorithm generating device **808** to design an experiment for optimizing embedded personalized systems on a population of user devices (e.g., user devices **820-826**). In particular, the experiment can define one or more experimental parameters to be evaluated. Algorithm generating device **808** can send the experiment to distributed evaluation server **806** for the experiment to be distributed to user devices **820-826**. Although FIG. **8** depicts algorithm generating device **808** as being directly coupled to distributed evaluation server **806** via I/O interface **818**, it should be appreciated that, in some examples, algorithm generating device **808** can be communicatively coupled to distributed evaluation server **806** via network(s) **810**. Network(s) **810** can be similar or identical to network(s) **110**, described above.

Distributed evaluation server **806** can include processing modules **814**, data & models **816**, and I/O interface **818**. In some examples, distributed evaluation server **806** can be part of server system **108** (FIG. **1**) and can exchange data and information with DA server **106**. Processing modules **814**, data & models **816**, and I/O interface **818** can be similar to processing modules **114**, data & models **116**, and I/O interface to DA client **112**, respectively. Additionally, processing module **814** can include distributed evaluation module **815** that is operable to perform distributed evaluation processes (e.g., process **900**) for embedded personalized systems. For example, distributed evaluation server **806** can instruct a population of user devices to store user data samples (e.g., user speech samples) for evaluating embedded personalized systems. Distributed evaluation server **806** can also receive the experiment from algorithm generating device **808** and generate corresponding instructions (e.g., the instructions of block **902**) for performing the experiment. Additionally, distributed evaluation server **806** can distribute the instructions to user devices **820-826** and cause each of user devices **820-826** to execute the instructions.

User devices **820-826** can each be electronic devices similar to user devices **104**, **200**, or **400**. In some examples, each of user devices **820-826** can implement at least a portion of digital assistant system **700**. For example, each of user devices **820-826** can include one or more embedded personalized systems (e.g., ASR system(s) **731**, natural language processing system, or speech synthesis system) of the digital assistant system **700**. Further, each of user devices **820-826** can include client-side distributed evaluation module **817** for receiving and executing the instructions of distributed evaluation module **815**. In particular, client-side distributed evaluation module **817** can execute the instructions to cause each of user devices **820-826** to generate a second embedded personalized system from an existing embedded personalized system. The second embedded personalized system can be generated by incorporating the one or more experimental parameters into the existing embedded personalized system. Client-side distributed evaluation module **817** can generate evaluation data (e.g., accuracy scores) for evaluating the one or more experimental parameters. In particular, the user data samples can be processed through the second embedded personalized system to generate the evaluation data. Client-side distributed evaluation module **817** can then transmit the evaluation data back to distributed evaluation server **806** for analysis.

In some examples, distributed evaluation module **815** can be configured to analyze the evaluation data from each of user devices **820-826** to determine whether the one or more experimental parameters caused improvements in the performance of the existing embedded personalized system. In response to determining that the one or more experimental parameters caused improvements in the performance of the existing embedded personalized system, distributed evaluation module **815** can generate second instructions for activating the second embedded personalized system in each of user devices **820-826**.

In other examples, distributed evaluation module **815** can forward the evaluation data to algorithm generating device **808** for the system developer to analyze. If the system developer determines from the evaluation data that the one or more experimental parameters caused improvements in the performance of the existing embedded personalized system, the system developers can provide input to distributed evaluation module **815** via algorithm generating device **808** to generate second instructions for activating the second embedded personalized system in each of user devices **820-826**.

Distributed evaluation module **815** can distribute the second instructions to each of devices **820-826**. Client-side distributed evaluation module **817** can execute the second instructions and cause the second embedded personalized system to be activated in each of user devices **820-826**. Activating the second embedded personalized system can cause the second embedded personalized system to be used in place of the existing embedded personalized system. In this manner, the embedded personalized system of each user device can be optimized using system **800**.

4. Processes for Evaluating Embedded Personalized Systems

FIGS. **9**A-B illustrate process **900** for evaluating embedded personalized systems according to various examples. Process **900** can be performed using one or more electronic devices implementing a digital assistant. In some examples, process **900** can be performed at a client-server system (e.g., systems **100** and/or **800**). In some examples, process **900** can be performed at an electronic device (e.g., device **104**, **200**, **400**, or **600**). In process **900**, some blocks are, optionally, combined, the order of some blocks are, optionally, changed, and some blocks are, optionally, omitted.

One or more statistical systems can be stored in the memory (e.g., memory **202**, or **470**) of the electronic device. For example, a speech recognition system (e.g., ASR system(s) **731**) can be stored in the memory of the electronic device. As discussed above, the speech recognition system can include one or more speech recognition engines (e.g., algorithms) and one or more speech recognition models (e.g., acoustic and/or language models). Further, the one or more statistical systems can be personalized (e.g., user-dependent) based on a user of the electronic device. For example, the stored speech recognition system can be a personalized speech recognition system that uses one or more personalized speech recognition models. The one or more personalized speech recognition models can be trained using data associated with the user of the electronic device (e.g., user data). In one example, the one or more personalized speech recognition models can include a personalized language model generated from text associated with the user. The text associated with the user can include text input from the user, transcribed speech input from the user, user-specific text data (e.g., contacts, music metadata, maps data, etc.) stored on the electronic device, or messages (e.g., text messages, emails, etc.) in which the user is the recipient. In another example, the one or more personalized speech recognition models can include a personalized acoustic model generated from speech input received at the electronic device from the user. In some examples, the one or more personalized speech recognition models can be generated on the user device (e.g., one of user devices **820-826**).

The memory of the electronic device can further store a plurality of user speech samples. The plurality of user speech samples can be derived from a plurality of speech inputs that are associated with a user of the electronic device. Specifically, the plurality of speech inputs can be received at the electronic device from the user. For example, the user can periodically provide spoken user requests while interacting with the digital assistant implemented on the electronic device. A predetermined portion (e.g., one percent) of the spoken user requests can be randomly captured and stored as user speech samples. In some examples, the spoken user requests can be sampled in a privacy preserving manner. Specifically, the spoken user request can be sampled randomly and the size of each sampled spoken user request can be limited in size and/or length. Additionally, the total duration of user speech sampled can be limited (e.g., at most 10 utterances or less than 1 minute of cumulative user speech). Further, in some examples, the user speech samples can be stored on a rolling basis, where each user speech sample is discarded after a predetermined amount of time and replaced with a new user speech sample. This can limit the amount of meaningful personal information captured at any given time. In some examples, the plurality of speech inputs can be received and the plurality of user speech samples can be stored prior to receiving the instructions at block **902**. In other examples, the plurality of speech inputs can be received and the plurality of user speech samples can be stored prior to processing the plurality of user speech samples using the second personalized speech recognition system at block **906**.

At block **902**, instructions that define an experiment can be received (e.g., at client-side distributed evaluation module **817** and via RF circuitry **208** or network communications interface **460**, **708**). The experiment can be associated with a personalized speech recognition system stored in the memory of the electronic device. The instructions can be received from a server (e.g., distributed evaluation server **806**). For example, the server can push the instructions onto a plurality of user devices (e.g., user devices **820-826**), which include the electronic device. Alternatively, the electronic device can be configured to retrieve the instructions from the server. The received instructions can define one or more experimental parameters to be evaluated using the personalized speech recognition system. For example, the instructions can include algorithms for evaluating the one or more experimental parameters. The algorithms can be designed by a system developer (e.g., at algorithm generating device **808**). The received instructions, when executed by the electronic device, can cause the electronic device to generate experimental data (e.g., as described in blocks **904** and **906**) that can be used to evaluate the one or more experimental parameters.

In some examples, the one or more experimental parameters can include one or more experimental interpolation weighting parameters for interpolating between a general (e.g., user-independent) speech recognition model and a personalized (e.g., user-dependent) speech recognition model of the personalized speech recognition system. The one or more experimental interpolation weighting parameters can be different from the one or more default interpolation weighting parameters implemented in the personal-

ized speech recognition system. In other examples, the one or more experimental parameters can include one or more machine learning hyperparameters. Hyperparameters can, for example, adjust the capacity of the speech recognition system, such as its flexibility and the degrees of freedom available for fitting speech data.

At block **904**, a second personalized speech recognition system can be generated (e.g., by client-side distributed evaluation module **817**) in accordance with the instructions of block **902**. The second personalized speech recognition system can be generated based on the personalized speech recognition system and the one or more experimental parameters. In some examples, the second personalized speech recognition system can be generated by substituting one or more relevant parameters of the personalized speech recognition system with the one or more experimental parameters. In other examples, the second personalized speech recognition system can be generated by installing one or more second personalized speech recognition engines (e.g., algorithms) that incorporate the one or more experimental parameters. The one or more second personalized speech recognition engines can be utilized by the second personalized speech recognition system. In yet other examples, the second personalized speech recognition system can be generated by training one or more second speech recognition models using the one or more experimental parameters. The one or more second speech recognition models can be utilized by the second personalized speech recognition system. The second personalized speech recognition system can remain inactive on the electronic device prior to receiving the second instructions at block **912**. Specifically, user input (e.g., speech input) received at the electronic device may not be processed by the second personalized speech recognition system prior to the second personalized speech recognition system being activated.

At block **906**, in accordance with the instructions received at block **902**, the plurality of user speech samples stored on the electronic device can be processed (e.g., by client-side distributed evaluation module **817** and/or STT processing module **730**) using the second personalized speech recognition system. Processing the plurality of user speech samples using the second personalized speech recognition system can generate a plurality of speech recognition results. The plurality of speech recognition results can be text representations that correspond to the plurality of user speech samples. Additionally, a plurality of accuracy scores corresponding to the plurality of speech recognition results can be generated by processing the plurality of user speech samples using the second personalized speech recognition system. Specifically, the plurality of accuracy scores can be generated from one or more speech recognition models used by the second speech recognition system.

In some examples, the plurality of accuracy scores are not actual error rates. For example, each accuracy score can be a confidence score representing a likelihood of the generated speech recognition result given the respective user speech sample. In some examples, the plurality of accuracy scores can be estimated error rates (e.g., estimated word error rate). In a specific example, each accuracy score can represent the estimated number of incorrect words given one hundred words generated using the second personalized speech recognition system. Thus, in some examples, the plurality of accuracy scores can be confidence scores generated without comparing the plurality of speech recognition results to a plurality of reference text. For example, the plurality of accuracy scores may not be actual word error rates generated by comparing the plurality of speech recognition results to verified reference text.

In examples where the plurality of accuracy scores are generated without comparing the plurality of speech recognition results to a plurality of reference text, the plurality of speech recognition results can remain on the electronic device. In particular, the plurality of speech recognition results may not be transmitted to any remote electronic device. In this way, user specific data (e.g., the speech recognition results generated using personalized speech recognition models) would not be sent to a third-party device (e.g., distributed evaluation server **806**), thereby preserving the privacy of the user.

In some examples, the plurality of speech recognition results can be based on one or more speech recognition models of the personalized speech recognition system and one or more second speech recognition models generated based on the one or more experimental parameters. In these examples, the plurality of accuracy scores can be derived from the one or more speech recognition models of the personalized speech recognition system. For example, the personalized speech recognition system can include one or more acoustic models and one or more language models. The instructions of block **902** can cause one or more experimental language models to be generated using the one or more experimental parameters. The second personalized speech recognition system can utilize the one or more acoustic models of the personalized speech recognition system and the one or more experimental language models to generate the plurality of speech recognition results. In this example, because the one or more experimental language models are different from the one or more language models of the personalized speech recognition system, accuracy scores (e.g., confidence scores) generated by the one or more experimental language models cannot be meaningfully compared against accuracy scores generated by the one or more language models of the personalized speech recognition system. In order to meaningfully compare the second personalized speech recognition system against the personalized speech recognition system, accuracy scores can be generated using only the one or more acoustic models that are utilized by both the personalized speech recognition system and the second personalized speech recognition system. Thus, in this example, the plurality of accuracy scores can be generated using the one or more acoustic models of the personalized speech recognition system. Specifically, the plurality of accuracy scores may not be derived from the one or more experimental language models. Similarly, in an alternative example, one or more experimental acoustic models can be generated using the one or more experimental parameters. The second personalized speech recognition system can utilize the one or more experimental acoustic models and one or more language models of the personalized speech recognition system to generate the plurality of speech recognition results. In this example, the plurality of accuracy scores can be generated using the one or more language models of the personalized speech recognition system and not derived from the one or more experimental acoustic models.

In other examples, the plurality of accuracy scores can be generated by comparing the plurality of speech recognition results to a plurality of reference text. In these examples, the plurality of accuracy scores can represent actual error rates (e.g., actual word error rates). The comparing can be performed on the electronic device to preserve the privacy of the user. In particular, the plurality of speech recognition

results may not be sent to a third-party device to compare against the plurality of reference text. In some examples, the plurality of reference text can be generated on the electronic device based on user input (e.g., ground truth donated by the user). In particular, prior to block **906**, the plurality of user speech samples can be transcribed (e.g., using the personalized speech recognition system or a remote speech recognition system). The transcribed user speech samples can then be presented to the user on the electronic device for verification. For example, the user can be prompted to correct the transcribed user speech samples if an error is noted. User input can then be received from the user at the electronic device. In particular, the user input can correct the transcribed user speech samples to generate the plurality of reference text (e.g., verified text). The plurality of reference text can thus be stored in the memory of the electronic device prior to block **906** and then utilized to generate the plurality of accuracy scores.

In some examples, the plurality of reference text can be generated on a remote server and then uploaded onto the electronic device to generate the plurality of accuracy scores. For example, prior to block **906**, the plurality of user speech samples can be transmitted to a remote server (e.g., DA server **106** or distributed evaluation server **806**). The plurality of user speech samples can then be processed using a large vocabulary automatic speech recognition system of the remote server to generate the plurality of reference text. The plurality of reference text can then be uploaded and stored on the electronic device where it can be used to generate the plurality of accuracy scores. The large vocabulary automatic speech recognition system can utilize one or more large speech recognition models and can implement system combination to produce accurate results. For efficiency, in some examples, the results generated by the large vocabulary automatic speech recognition system may not be verified by an individual prior to being uploaded onto the electronic device.

In other examples, the plurality of reference text can be verified by an individual prior to being uploaded onto the electronic device. In particular, the plurality of reference text can be generated based on user input received at the remote server. For example, the plurality of user speech samples can be transcribed at the remote server (e.g., using a large vocabulary automatic speech recognition system as described above) and the transcribed user speech samples can be verified by an individual to generate the plurality of reference text. Specifically, the individual can compare the user speech samples with the transcribed user speech samples and provide user input to the remote server to correct portions of the transcribed user speech samples to generate the plurality of reference text. In other examples, the individual can directly transcribe the plurality of user speech samples to generate the plurality of reference text. In particular, the individual can listen to the plurality of user speech samples and manually generate the plurality of reference text corresponding to the plurality of user speech samples. In these examples, user text input corresponding to a transcription of the plurality of user speech samples can be received at the remote server. The plurality of reference text can then be uploaded and stored on the electronic device where it can be compared against the plurality of speech recognition results to generate the plurality of accuracy scores.

In some examples, the plurality of speech recognition results can be combined with a plurality of second speech recognition results to generate a plurality of combined speech recognition results. For example, the plurality of user speech samples can be transmitted to a remote server (e.g., DA server **106**) where a remote speech recognition system on the remote server processes the plurality of user speech samples to generate the plurality of second speech recognition results. The remote speech recognition system can be a general speech recognition system that utilizes user-independent speech recognition models. The plurality of second speech recognition results can be transmitted back to the electronic device where it can be combined with the plurality of speech recognition results. As described in greater detail below at block **918**, the combination can be performed in a streaming fashion where each second speech recognition result is streamed back to the electronic device as it is being generated and combined on-the-fly with the respective speech recognition result at a word level. Alternatively, the combination can be performed as a separate step where each second speech recognition result is sent back to the electronic device after it is completely generated and then combined with the respective speech recognition result as a whole. The combination can be based on the instructions received at block **902**. For example, the combination can apply one or more interpolation weighting parameters defined in the instructions of block **902**. Additionally, the plurality of combined speech recognition results can be associated with a plurality of combined accuracy scores. In some examples, the plurality of combined accuracy scores can be based on the plurality of accuracy scores associated with the plurality of speech recognition results and a plurality of second accuracy scores associated with the plurality of second speech recognition results. The plurality of combined accuracy scores can be used to evaluate the accuracy and performance of the combined speech recognition system based on the one or more interpolation weighting parameters.

At block **908**, the plurality of user speech samples can be processed (e.g., by client-side distributed evaluation module **817** and/or STT processing module **730**) using the personalized speech recognition system. In particular, processing the plurality of user speech samples using the personalized speech recognition system can generate a plurality of reference speech recognition results. Additionally, a plurality of reference accuracy scores corresponding to the plurality of reference speech recognition results can be generated by processing the plurality of user speech samples using the personalized speech recognition system. The personalized speech recognition system can be the default speech recognition system used by the electronic device. The plurality of reference accuracy scores of block **908** can serve as a reference to compare against the plurality of accuracy scores of block **906**. In this way, the relative performance of the second personalized speech recognition system can be determined with respect to the personalized speech recognition system.

The plurality of reference accuracy scores can be generated in a similar manner as the plurality of accuracy scores of block **906**, discussed above. In some examples, the plurality of reference accuracy scores can be confidence scores, which represent estimated error rates (e.g., estimated word error rates) rather than actual error rates. In these examples, the plurality of reference accuracy scores can be generated without comparing the plurality of reference speech recognition results to a plurality of reference text. Additionally, the plurality of reference accuracy scores can be derived from the same one or more speech recognition models of the personalized speech recognition system from which the plurality of accuracy scores of block **906** are derived. For example, if the plurality of accuracy scores at

block **906** are generated using only the one or more acoustic models of the personalized speech recognition system, then the plurality of reference accuracy scores at block **908** are also generated using only the one or more acoustic models of the personalized speech recognition system. This enables a meaningful comparison between the plurality of accuracy scores of block **906** and the plurality of reference accuracy scores of block **908**.

In other examples, if the plurality of accuracy scores of block **906** are generated by comparing the plurality of speech recognition results to a plurality of reference text, then the plurality of reference accuracy scores can be generated in the same manner. Specifically, the plurality of reference accuracy scores can be generated by comparing the plurality of reference speech recognition results to a plurality of reference text. The comparison can be performed at the electronic device. As discussed above, the plurality of reference text can be generated at the electronic device based on user input received at the electronic device. Alternatively, the plurality of reference text can be generated at the remote server using a remote speech recognition system and/or based on user input received at the remote server.

At block **910**, the plurality of accuracy scores of block **906** and/or the plurality of reference accuracy scores of block **908** can be transmitted (e.g., by client-side distributed evaluation module **817** and/or using RF circuitry **208** or network communications interface **460**, **708**) to a remote server (e.g., distributed evaluation server **806**) for evaluation. For example, the performance of the second personalized speech recognition system (based on the one or more experimental parameters) can be evaluated by comparing the plurality of accuracy scores of block **906** to the plurality of reference accuracy scores of block **908**. The evaluation can be performed automatically at the remote server (e.g., using distributed evaluation module **815**). Alternatively, the evaluation can be performed by an individual, such as the system developer (e.g., at algorithm generating device **808**).

In some examples, based on the plurality of accuracy scores and the plurality of reference accuracy scores, a determination can be made that the second personalized speech recognition system performs better than the personalized speech recognition system. In accordance with this determination, the remote server can provide second instructions for activating the second personalized speech recognition system.

It should be recognized that the evaluation of the one or more experimental parameters can be based on experiments performed on many electronic devices. For examples, blocks **902** to **910** can be performed on a population of devices (e.g., user devices **820**-**826**). The population of devices can include a large number of devices (e.g., greater than 10,000 devices) to evaluate the one or more experimental parameters at scale. Each device can receive instructions (block **902**) defining the experiment for evaluating the one or more experimental parameters. Each device can then perform the experiment (blocks **904**-**908**) to generate accuracy scores and reference accuracy scores. The accuracy scores can correspond to a second personalized speech recognition system generated based on the one or more experimental parameters, and the reference accuracy scores can correspond to a default personalized speech recognition system of the device. Each device can then transmit the accuracy scores and the reference accuracy scores to the remote server (block **910**) for evaluation. This enables the one or more experimental parameters to be evaluated at scale based on a large volume of data from the population of devices. In particular, a determination can be made based on the large volume of data from the population devices whether the performance of the second personalized speech recognition system is statistically better than the performance of the personalized speech recognition system. In response to determining that the second personalized speech recognition system performs better than the personalized speech recognition system, second instructions for activating the second personalized speech recognition system can be provided based.

As discussed above, the accuracy scores and the reference accuracy scores can be confidence scores (e.g., estimated word error rates) rather than actual accuracy scores (e.g., actual word error rates). In particular, the accuracy scores and the reference accuracy scores can be based on likelihood values obtained from one or more speech recognition models used by the personalized speech recognition system and the second personalized speech recognition system. Based on experimental data, it has been confirmed that, at scale, confidence scores, such as estimated word error rates, correlate relatively well to actual accuracy scores, such as actual word error rates. Thus, confidence scores can reliably be used to compare the accuracy of different speech recognition systems, such as the personalized speech recognition system compared to the second personalized speech recognition system. This is an unexpected result. Accordingly, as discussed above, process **900** for evaluating embedded personalized systems can be performed using confidence scores without having to determine actual accuracy scores.

In some examples, the instructions of block **902** can cause blocks **904** to **910** to be performed in response to detecting one or more predetermined operating states of the user device. The one or more predetermined operating states can correspond to an idle state where performing the evaluation of the one or more experimental parameters would be least disruptive to the user. For example, the one or more predetermined operating states can include the user device being connected to a Wi-Fi network, the user device being connect to a power source, and the time corresponding to the evening period of between 12:00 am and 6:00 am.

At block **912**, the second instructions for activating the second personalized speech recognition system can be received (e.g., by client-side distributed evaluation module **817** and via RF circuitry **208** or network communications interface **460**, **708**). As discussed above, the second instructions can be based on the plurality of accuracy scores of block **906** and/or the plurality of reference accuracy scores of block **908**. In some examples, the second instructions can be based on a plurality of sets of accuracy scores obtained from a plurality of remote electronic devices. The plurality of sets of accuracy scores can be generated at the plurality of remote electronic devices in accordance with experimental instructions (e.g., instructions of block **902**) that define the one or more experimental parameters.

At block **914**, the second personalized speech recognition system can be activated (e.g., by client-side distributed evaluation module **817**) in accordance with the second instructions of block **912**. The second personalized speech recognition system can be activated in the STT processing module (e.g., STT process module **730**) of the user device. In some examples, activating the second personalized speech recognition system can include modifying the personalized speech recognition system by incorporating the one or more experimental parameters in the personalized speech recognition system. In these examples, subsequently received user speech input to be processed using the modified personalized speech recognition system that implements the one or more experimental parameters. In other examples,

activating the second personalized speech recognition system can include replacing the personalized speech recognition system with the second personalized speech recognition system. In these examples, subsequently received user speech input can be processed using the second personalized speech recognition system rather than the personalized speech recognition system.

At block **916**, user speech input can be received (e.g., at I/O processing module **728**). The user speech input can be received after activating the second personalized speech recognition system at block **914**. The user speech input can be addressed to the digital assistant implemented on the electronic device and can contain a user request in the form of a natural language command, request, statement, narrative, and/or inquiry. For example, as discussed above, the user speech input can include requests such as, "Where am I right now?" or "Please invite my friends to my girlfriend's birthday party next week."

At block **918**, the user speech input can be processed using the activated second personalized speech recognition system to generate a speech recognition result. The speech recognition result can be a text representation (e.g., sequence of words or tokens) of the user speech input. In some examples, block **918** can be performed using a STT processing module (STT processing module **730** of FIG. **7**B). The functions of the STT processing module can be divided between a remote server (e.g., DA server **106** of FIG. **1**) and a client device (e.g., user device **104** of FIG. **1**). For example, the client device can include the second personalized speech recognition system implementing a personalized speech recognition model and the remote server can include a remote speech recognition system implementing a generic speech recognition model. In these examples, the speech recognition result can be based on a combination of a first intermediate speech recognition result generated by the second personalized speech recognition system of the client device and second intermediate speech recognition result generated by the remote speech recognition system of the remote server.

Upon receiving the user speech input of block **916**, the user speech input can be processed using the second personalized speech recognition system of the client device to generate the first intermediate speech recognition result. At the same time, a copy of the user speech input can be sent to the remote server where it is processed by the remote speech recognition system to generate the second intermediate speech recognition result. In some examples, the second intermediate speech recognition result can be sent back to the client device in a streaming fashion as it is being generated. This can occur while second personalized speech recognition system of the client device is processing the user speech input to generate the first intermediate speech recognition result. In these examples, the STT processing module can select between a streamed word of the second intermediate speech recognition result and a corresponding word from the first intermediate speech recognition result to incrementally build up the final combined speech recognition result.

In other examples, the second intermediate speech recognition result can be sent back to the client device as a whole after it has been generated by the remote speech recognition system. In these examples, the STT processing module can wait until both recognition systems are finished and then generate the final combined speech recognition result by selecting words from both the first intermediate speech recognition result and the second intermediate speech recognition result.

Although in the above examples, the second intermediate speech recognition result is sent back to the client device and combined with the first intermediate speech recognition result on the client device to generate the final combined speech recognition result, it should be recognized that in other examples, the first intermediate speech recognition results can alternatively be sent to the remote server and combined with the second intermediate speech recognition result on the remote server to generate the final combined speech recognition result. In some examples, the final combined speech recognition result can then be sent to the client device (e.g., for display on the client device).

At block **920**, a response to the user speech input can be outputted based on the speech recognition result. For example, speech recognition results for the user speech input "Where am I right now" can be generated at block **918**. The speech recognition results can be processed through a natural language processing module (e.g., natural language process module **732**) to determine the actionable intent of determining the current location of the user device. Tasks corresponding to the actionable intent can then be performed (e.g., using task flow processing module **736** and service processing module **738**). The task can include, for example, retrieving the GPS coordinates corresponding to the current location of the electronic device and displaying a map on the electronic device indicating the current location. Further, the task can include providing the response (e.g., using dialogue processing module **734**) such as "You are in Central Park near the west gate."

Embedded statistical systems can often require trading off accuracy in order to accommodate the lower memory capacities associated with user devices. Specifically, embedded statistical systems can require implementing smaller, less accurate, personalized statistical models. For example, it was found that for user-specific speech input, a smaller scale, personalized language model that is suitable to be implemented on an embedded speech recognition system of a user device had a word error rate of 11.3% (i.e., **11.3** errors per 100 words). In contrast, a large-scale, personalized language model suitable to be implemented on a server-based speech recognition system had a lower word error rate of 10.9% (i.e., **10.9** errors per 100 words). However, as discussed above, in order to preserve the privacy of the user, personalized language models are preferably implemented on embedded speech recognition systems of the user device rather than on server-based speech recognition systems. Accordingly, server-based speech recognition systems would implement generic language models rather than personalized language models. For user-specific speech input, a large-scale, generic language model suitable to be implemented on a server-based speech recognition system was found to have a significantly higher word error rate of 11.8%. However, by using process **900** to optimally combine the results from a server-based speech recognition system implementing the large-scale generic language model (11.8% word error rate) with the results from an embedded speech recognition system implementing the smaller scale personalized language model (11.3% word error rate), it was found that a combined word error rate of 11.0% can be achieved. This is an unexpectedly low error rate that is comparable to the 10.9% word error rate achieved by the large-scale personalized language model. Thus, using process **900** to optimally combine results from a large-scale, generic server-based system with a small-scale but personalized embedded system can produce unexpectedly low error rates that are comparable to a large-scale, personalized server based system.

Although process **900** is described above with reference to a personalized speech recognition system implementing one or more speech recognition models, it should be recognized that process **900** can be similarly applicable for evaluating other personalized statistical systems, such as machine translation systems, natural language understanding system, or speech synthesis systems. For example, instead of "user speech samples," "personalized speech recognition system," "speech recognition results," and "second personalized speech recognition system," referenced above, process **900** can be implemented using "user natural language discourse samples," "personalized natural language processing system," "natural language results," and "second natural language processing system." Similarly, based on the above described, one skilled in the art would recognize the necessary modifications required to implement process **900** for evaluating other types of personalized statistical systems.

5. Other Electronic Devices

FIG. **10** shows a functional block diagram of electronic device **1000** configured in accordance with the principles of the various described examples. The functional blocks of the device can be optionally implemented by hardware, software, or a combination of hardware and software to carry out the principles of the various described examples. It is understood by persons of skill in the art that the functional blocks described in FIG. **10** can be optionally combined or separated into sub-blocks to implement the principles of the various described examples. Therefore, the description herein optionally supports any possible combination, separation, or further definition of the functional blocks described herein.

As shown in FIG. **10**, electronic device **1000** can include touch screen display unit **1002** configured to display information and to receive input from the user, audio input unit **1004** configured to receive audio input (e.g., speech input), speaker unit **1005** configured to output audio (e.g., speech), and communication unit **1006** configured to transmit and receive information (e.g., instructions or speech samples). Electronic device **1000** can further include processing unit **1008** coupled to touch screen display unit **1002**, audio input unit **1004**, speaker unit **1005**, and communication unit **1006**. In some examples, processing unit **1008** can include receiving unit **1010**, generating unit **1012**, speech processing unit **1014**, activating unit **1016**, outputting unit **1018**, and transmitting unit **1020**.

In accordance with some embodiments, processing unit **1008** is configured to receive (e.g., with receiving unit **1010** and via communication unit **1006**) instructions that define an experiment associated with the personalized speech recognition system. The instructions define one or more experimental parameters. Processing unit **1008** is further configured to, in accordance with the received instructions, generate (e.g., with generating unit **1012**) a second personalized speech recognition system based on the personalized speech recognition system and the one or more experimental parameters. Processing unit **1008** is further configured to, in accordance with the received instructions, process (e.g., with speech processing unit **1014**) the plurality of user speech samples using the second personalized speech recognition system to generate a plurality of speech recognition results and a plurality of accuracy scores corresponding to the plurality of speech recognition results. Processing unit **1008** is further configured to receive (e.g., with receiving unit **1010** and via communication unit **1006**) second instructions based on the plurality of accuracy scores. Processing unit **1008** is further configured to, in accordance with the second instructions, activate (e.g., with activating unit **1016**) the second speech recognition system. Processing unit **1008** is further configured to receive (e.g., with receiving unit **1010** and via audio input unit **1004**) user speech input. Processing unit **1008** is further configured to process (e.g., with speech processing unit **1014**) the user speech input using the activated second personalized speech recognition system to generate a speech recognition result. Processing unit **1008** is further configured to output (e.g., with outputting unit **1018** and via touch screen display unit **1002** or speaker unit **1005**) a response to the user speech input based on the speech recognition result.

In some examples, the one or more experimental parameters include one or more machine learning hyperparameters.

In some examples, the one or more experimental parameters include one or more weighting parameters for interpolating between a general speech recognition model and a personalized speech recognition model of the personalized speech recognition system.

In some examples, the plurality of speech recognition results are not transmitted to a remote electronic device.

In some examples, the plurality of accuracy scores are confidence scores generated without comparing the plurality of speech recognition results to a plurality of reference text.

In some examples, the plurality of speech recognition results are based on one or more speech recognition models of the personalized speech recognition system and one or more second speech recognition models generated based on the one or more experimental parameters, and the plurality of accuracy scores are derived from the one or more speech recognition models of the personalized speech recognition system.

In some examples, the plurality of accuracy scores are not derived from the one or more second speech recognition models.

In some examples, the memory stores a plurality of verified text. The plurality of verified text are generated based on user input received at the electronic device. The plurality of accuracy scores are generated by comparing the plurality of speech recognition results to the plurality of verified text.

In some examples, processing unit **1008** is further configured to transmit (e.g., with transmitting unit **1020**) the plurality of user speech samples to a remote electronic device. Processing unit **1008** is further configured to receive (e.g., with receiving unit **1010** and via communication unit **1006**), from the remote electronic device, a plurality of second verified text corresponding to the plurality of user speech samples. The plurality of accuracy scores are generated by comparing the plurality of speech recognition results to the plurality of second verified text.

In some examples, the plurality of second verified text is generated by processing the plurality of user speech samples using a large vocabulary automatic speech recognition system of the remote electronic device.

In some examples, the plurality of second verified text is generated based on second user input received at the remote electronic device.

In some examples, processing unit **1008** is further configured to, prior to receiving the instructions, receive (e.g., with receiving unit **1010** and via audio input unit **1004**) a plurality of speech inputs at the electronic device. The plurality of speech inputs are associated with a user. The user speech samples are derived from the plurality of speech inputs.

In some examples, the personalized speech recognition system includes one or more personalized speech recognition models trained using user data.

In some examples, the second speech recognition system is inactive prior to receiving the second instructions.

In some examples, processing unit **1008** is further configured to process (e.g., with speech processing unit **1014**) the plurality of user speech samples using the personalized speech recognition system to generate a plurality of reference speech recognition results and a plurality of reference accuracy scores corresponding to the plurality of reference speech recognition results. The second instructions are based on the plurality of reference accuracy scores.

In some examples, the plurality of speech recognition results are generated by combining a plurality of second speech recognition results generated from the second speech recognition system with a plurality of third speech recognition results generated from a remote speech recognition system.

In some examples, the second instructions are based on a plurality of sets of accuracy scores obtained from a plurality of remote electronic devices in accordance with experimental instructions defining the one or more experimental parameters.

In some examples, the speech recognition result is generated based on a word-level combination of a second speech recognition result generated from the second speech recognition system with a third speech recognition result generated from a remote speech recognition system.

The operations described above with reference to FIGS. **9**A-B can be optionally implemented by components depicted in FIGS. **1-4**, **6**A-B, **7**A, and **8**. For example, the operations of process **900** may be implemented by one or more of operating system **718**, applications module **724**, I/O processing module **728**, I/O interface **818**, STT processing module **730**, User Data **748**, distributed evaluation module **815**, data & models **816**, client distributed evaluation module **815**, or processor(s) **220**, **410**, **704**. It would be clear to a person having ordinary skill in the art how other processes can be implemented based on the components depicted in FIGS. **1-4**, **6**A-B, **7**A, **8**, and **10**.

In accordance with some implementations, a computer-readable storage medium (e.g., a non-transitory computer readable storage medium) is provided, the computer-readable storage medium storing one or more programs for execution by one or more processors of an electronic device, the one or more programs including instructions for performing any of the methods or processes described herein.

In accordance with some implementations, an electronic device (e.g., a portable electronic device) is provided that comprises means for performing any of the methods or processes described herein.

In accordance with some implementations, an electronic device (e.g., a portable electronic device) is provided that comprises a processing unit configured to perform any of the methods or processes described herein.

In accordance with some implementations, an electronic device (e.g., a portable electronic device) is provided that comprises one or more processors and memory storing one or more programs for execution by the one or more processors, the one or more programs including instructions for performing any of the methods or processes described herein.

The foregoing description, for purpose of explanation, has been described with reference to specific embodiments. However, the illustrative discussions above are not intended to be exhaustive or to limit the invention to the precise forms disclosed. Many modifications and variations are possible in view of the above teachings. The embodiments were chosen and described in order to best explain the principles of the techniques and their practical applications. Others skilled in the art are thereby enabled to best utilize the techniques and various embodiments with various modifications as are suited to the particular use contemplated.

Although the disclosure and examples have been fully described with reference to the accompanying drawings, it is to be noted that various changes and modifications will become apparent to those skilled in the art. Such changes and modifications are to be understood as being included within the scope of the disclosure and examples as defined by the claims.

As described above, one aspect of the present technology is the gathering and use of data available from various sources to improve the delivery to users of invitational content or any other content that may be of interest to them. The present disclosure contemplates that in some instances, this gathered data may include personal information data that uniquely identifies or can be used to contact or locate a specific person. Such personal information data can include demographic data, location-based data, telephone numbers, email addresses, home addresses, or any other identifying information.

The present disclosure recognizes that the use of such personal information data, in the present technology, can be used to the benefit of users. For example, the personal information data can be used to deliver targeted content that is of greater interest to the user. Accordingly, use of such personal information data enables calculated control of the delivered content. Further, other uses for personal information data that benefit the user are also contemplated by the present disclosure.

The present disclosure further contemplates that the entities responsible for the collection, analysis, disclosure, transfer, storage, or other use of such personal information data will comply with well-established privacy policies and/or privacy practices. In particular, such entities should implement and consistently use privacy policies and practices that are generally recognized as meeting or exceeding industry or governmental requirements for maintaining personal information data private and secure. For example, personal information from users should be collected for legitimate and reasonable uses of the entity and not shared or sold outside of those legitimate uses. Further, such collection should occur only after receiving the informed consent of the users. Additionally, such entities would take any needed steps for safeguarding and securing access to such personal information data and ensuring that others with access to the personal information data adhere to their privacy policies and procedures. Further, such entities can subject themselves to evaluation by third parties to certify their adherence to widely accepted privacy policies and practices.

Despite the foregoing, the present disclosure also contemplates embodiments in which users selectively block the use of, or access to, personal information data. That is, the present disclosure contemplates that hardware and/or software elements can be provided to prevent or block access to such personal information data. For example, in the case of advertisement delivery services, the present technology can be configured to allow users to select to "opt in" or "opt out" of participation in the collection of personal information data during registration for services. In another example, users can select not to provide location information for targeted content delivery services. In yet another example,

users can select to not provide precise location information, but permit the transfer of location zone information.

Therefore, although the present disclosure broadly covers use of personal information data to implement one or more various disclosed embodiments, the present disclosure also contemplates that the various embodiments can also be implemented without the need for accessing such personal information data. That is, the various embodiments of the present technology are not rendered inoperable due to the lack of all or a portion of such personal information data. For example, content can be selected and delivered to users by inferring preferences based on non-personal information data or a bare minimum amount of personal information, such as the content being requested by the device associated with a user, other non-personal information available to the content delivery services, or publically available information.

What is claimed is:

1. An electronic device for evaluating personalized embedded systems, the device comprising:

one or more processors; and

memory storing a plurality of user speech samples, a personalized speech recognition system, and instructions, the instructions, when executed by the one or more processors, cause the one or more processors to:

receive second instructions that define an experiment associated with the personalized speech recognition system, wherein the second instructions define one or more experimental parameters, and wherein the one or more experimental parameters include one or more weighting parameters for interpolating between a general speech recognition model and a personalized speech recognition model of the personalized speech recognition system;

in accordance with the received second instructions:

generate a second personalized speech recognition system based on the personalized speech recognition system and the one or more experimental parameters; and

process the plurality of user speech samples using the second personalized speech recognition system to generate a plurality of speech recognition results and a plurality of accuracy scores corresponding to the plurality of speech recognition results;

provide, to one or more remote devices, the plurality of accuracy scores to evaluate, wherein third instructions for applying the second personalized speech recognition system are generated based on the plurality of accuracy scores;

receive the third instructions;

in accordance with the third instructions, activate the second personalized speech recognition system to perform speech recognition;

receive user speech input;

process the user speech input using the activated second personalized speech recognition system to generate a speech recognition result; and

output a response to the user speech input based on the speech recognition result.

2. The device of claim **1**, wherein the one or more experimental parameters further include one or more machine learning hyperparameters.

3. The device of claim **1**, wherein the plurality of speech recognition results are not transmitted to a remote electronic device.

4. The device of claim **1**, wherein the plurality of accuracy scores are confidence scores generated without comparing the plurality of speech recognition results to a plurality of reference text.

5. The device of claim **1**, wherein:

the memory stores a plurality of verified text, the plurality of verified text generated based on user input received at the electronic device; and

the plurality of accuracy scores are generated by comparing the plurality of speech recognition results to the plurality of verified text.

6. The device of claim **1**, wherein the instructions further cause the one or more processors to:

transmit the plurality of user speech samples to a remote electronic device; and

receive, from the remote electronic device, a plurality of second verified text corresponding to the plurality of user speech samples, wherein the plurality of accuracy scores are generated by comparing the plurality of speech recognition results to the plurality of second verified text.

7. The device of claim **6**, wherein the plurality of second verified text is generated by processing the plurality of user speech samples using a large vocabulary automatic speech recognition system of the remote electronic device.

8. The device of claim **6**, wherein the plurality of second verified text is generated based on second user input received at the remote electronic device.

9. The device of claim **1**, wherein the plurality of speech recognition results are based on one or more speech recognition models of the personalized speech recognition system and one or more second speech recognition models generated based on the one or more experimental parameters, and wherein the plurality of accuracy scores are derived from the one or more speech recognition models of the personalized speech recognition system.

10. The device of claim **9**, wherein the plurality of accuracy scores are not derived from the one or more second speech recognition models.

11. The device of claim **1**, wherein the instructions further cause the one or more processors to:

prior to receiving the second instructions, receive a plurality of speech inputs at the electronic device, wherein the plurality of speech inputs are associated with a user, and wherein the user speech samples are derived from the plurality of speech inputs.

12. The device of claim **1**, wherein the instructions further cause the one or more processors to:

process the plurality of user speech samples using the personalized speech recognition system to generate a plurality of reference speech recognition results and a plurality of reference accuracy scores corresponding to the plurality of reference speech recognition results, wherein the third instructions are based on the plurality of reference accuracy scores.

13. The device of claim **1**, wherein the plurality of speech recognition results are generated by combining a plurality of second speech recognition results generated from the second personalized speech recognition system with a plurality of third speech recognition results generated from a remote speech recognition system.

14. The device of claim **1**, wherein the third instructions are based on a plurality of sets of accuracy scores obtained from a plurality of remote electronic devices in accordance with experimental instructions defining the one or more experimental parameters.

15. The device of claim 1, wherein the speech recognition result is generated based on a word-level combination of a second speech recognition result generated from the second personalized speech recognition system with a third speech recognition result generated from a remote speech recognition system.

16. A method for evaluating personalized embedded systems implemented on a device, comprising:

at an electronic device having one or more processors and memory storing a plurality of user speech samples and a personalized speech recognition system:

receiving instructions that define an experiment associated with the personalized speech recognition system, wherein the instructions define one or more experimental parameters, and wherein the one or more experimental parameters include one or more weighting parameters for interpolating between a general speech recognition model and a personalized speech recognition model of the personalized speech recognition system;

in accordance with the received instructions:

generating a second personalized speech recognition system based on the personalized speech recognition system and the one or more experimental parameters; and

processing the plurality of user speech samples using the second personalized speech recognition system to generate a plurality of speech recognition results and a plurality of accuracy scores corresponding to the plurality of speech recognition results;

providing, to one or more remote devices, the plurality of accuracy scores to evaluate, wherein second instructions for applying the second personalized speech recognition system are generated based on the plurality of accuracy scores;

receiving the second instructions ;

in accordance with the second instructions, activating the second personalized speech recognition system to perform speech recognition;

receiving user speech input;

processing the user speech input using the activated second personalized speech recognition system to generate a speech recognition result; and

outputting a response to the user speech input based on the speech recognition result.

17. The method of claim 16, wherein the one or more experimental parameters further include one or more machine learning hyperparameters.

18. The method of claim 16, wherein the plurality of speech recognition results are not transmitted to a remote electronic device.

19. The method of claim 16, wherein the plurality of accuracy scores are confidence scores generated without comparing the plurality of speech recognition results to a plurality of reference text.

20. The method of claim 16, further comprising:

transmitting the plurality of user speech samples to a remote electronic device; and

receiving, from the remote electronic device, a plurality of second verified text corresponding to the plurality of user speech samples, wherein the plurality of accuracy scores are generated by comparing the plurality of speech recognition results to the plurality of second verified text.

21. A non-transitory computer readable storage medium having instructions stored thereon, the instructions, when executed by one or more processors, cause the one or more processors to:

receive second instructions that define an experiment associated with a personalized speech recognition system, wherein the second instructions define one or more experimental parameters, and wherein the one or more experimental parameters include one or more weighting parameters for interpolating between a general speech recognition model and a personalized speech recognition model of the personalized speech recognition system;

in accordance with the received second instructions:

generate a second personalized speech recognition system based on the personalized speech recognition system and the one or more experimental parameters; and

process a plurality of user speech samples using the second personalized speech recognition system to generate a plurality of speech recognition results and a plurality of accuracy scores corresponding to the plurality of speech recognition results;

provide, to one or more remote devices, the plurality of accuracy scores to evaluate, wherein third instructions for applying the second personalized speech recognition system are generated based on the plurality of accuracy scores;

receive the third instructions ;

in accordance with the third instructions, activate the second personalized speech recognition system to perform speech recognition;

receive user speech input;

process the user speech input using the activated second personalized speech recognition system to generate a speech recognition result; and

output a response to the user speech input based on the speech recognition result.

22. The computer readable storage medium of claim 21, wherein the one or more experimental parameters further include one or more machine learning hyperparameters.

23. The computer readable storage medium of claim 21, wherein the plurality of speech recognition results are not transmitted to a remote electronic device.

24. The computer readable storage medium of claim 21, wherein the plurality of accuracy scores are confidence scores generated without comparing the plurality of speech recognition results to a plurality of reference text.

25. The computer readable storage medium of claim 21, wherein the instructions further cause the one or more processors to:

transmit the plurality of user speech samples to a remote electronic device; and

receive, from the remote electronic device, a plurality of second verified text corresponding to the plurality of user speech samples, wherein the plurality of accuracy scores are generated by comparing the plurality of speech recognition results to the plurality of second verified text.

* * * * *