US010028750B2

(12) **United States Patent**
Rose

(10) **Patent No.: US 10,028,750 B2**
(45) **Date of Patent: Jul. 24, 2018**

(54) **APPARATUS AND METHOD FOR FABRICATING A CUSTOMIZED PATIENT-SPECIFIC ORTHOPAEDIC INSTRUMENT**

(75) Inventor: **Bryan Rose**, South Whitley, IN (US)

(73) Assignee: **DePuy Synthes Products, Inc.**, Raynham, MA (US)

(*) Notice: Subject to any disclaimer, the term of this patent is extended or adjusted under 35 U.S.C. 154(b) by 1785 days.

(21) Appl. No.: **12/241,001**

(22) Filed: **Sep. 29, 2008**

(65) **Prior Publication Data**

US 2009/0087276 A1 Apr. 2, 2009

Related U.S. Application Data

(60) Provisional application No. 60/976,447, filed on Sep. 30, 2007, provisional application No. 60/976,448, filed on Sep. 30, 2007, provisional application No. 60/976,451, filed on Sep. 30, 2007, provisional application No. 60/976,444, filed on Sep. 30, 2007, provisional application No. 60/976,446, filed on Sep. 30, 2007.

(51) **Int. Cl.**

G06Q 10/00	(2012.01)
G06Q 50/00	(2012.01)
A61B 17/15	(2006.01)
A61B 17/17	(2006.01)
A61B 17/00	(2006.01)
A61B 17/56	(2006.01)
A61B 34/10	(2016.01)

(52) **U.S. Cl.**

CPC ***A61B 17/155*** (2013.01); ***A61B 17/157*** (2013.01); ***A61B 17/1764*** (2013.01); *A61B 2017/00526* (2013.01); *A61B 2017/568* (2013.01); *A61B 2034/108* (2016.02); *Y10T 409/30084* (2015.01)

(58) **Field of Classification Search**

CPC G06Q 10/00; G06Q 50/00; G16H 10/00; G16H 15/00; G16H 20/00; G16H 30/00; G16H 40/00; G16H 50/00; G16H 70/00; G16H 80/00

USPC 705/2, 3

See application file for complete search history.

(56) **References Cited**

U.S. PATENT DOCUMENTS

2,702,550	A	2/1955	Rowe
3,229,372	A	1/1966	Quashnock et al.
3,298,410	A	1/1967	Noboru
3,624,747	A	11/1971	McKnight et al.
3,685,720	A	8/1972	Brady

(Continued)

FOREIGN PATENT DOCUMENTS

CA	2447694	12/2002
CA	2501041	4/2004

(Continued)

OTHER PUBLICATIONS

"Insall/Burstein II Surgical Technique", Zimmer, (18 pages).

(Continued)

Primary Examiner — Sean K Hunter
Assistant Examiner — Charles P Coleman
(74) *Attorney, Agent, or Firm* — Barnes & Thornburg LLP

(57) **ABSTRACT**

A number of orthopedic surgical instruments are also disclosed. A method, apparatus, and system for fabricating such instruments are also disclosed.

14 Claims, 112 Drawing Sheets

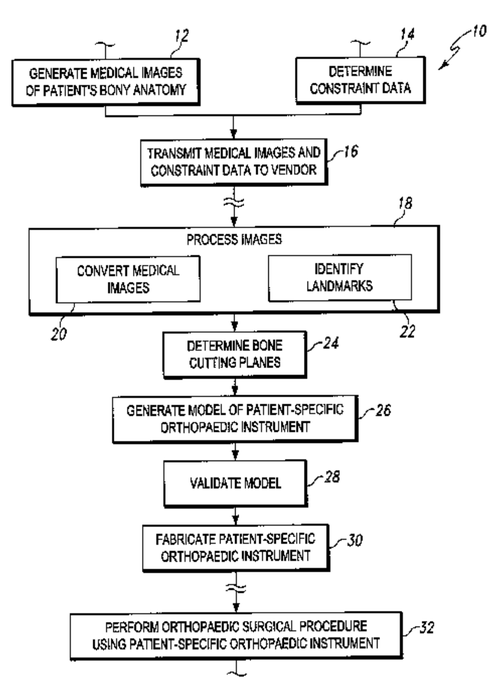

(56) **References Cited**

U.S. PATENT DOCUMENTS

3,698,017 A 10/1972 Scales et al.
3,774,244 A 11/1973 Walker
3,840,904 A 10/1974 Tronzo
3,869,731 A 3/1975 Waugh et al.
3,901,298 A 8/1975 Eby
3,903,549 A 9/1975 Deyerle
3,920,022 A 11/1975 Pastor
3,941,127 A 3/1976 Froning
3,965,950 A 6/1976 MacDonald
3,994,287 A 11/1976 Turp et al.
4,055,862 A 11/1977 Farling
4,081,866 A 4/1978 Upshaw et al.
4,085,466 A 4/1978 Goodfellow et al.
4,140,161 A 2/1979 Russo et al.
4,197,886 A 4/1980 MacDonald
4,311,145 A 1/1982 Esty et al.
4,349,018 A 9/1982 Chambers
4,373,709 A 2/1983 Whitt
4,386,609 A 6/1983 Mongeon
4,400,833 A 8/1983 Kurland
4,436,684 A 3/1984 White
D273,895 S 5/1984 Kenna
D274,091 S 5/1984 Kenna
4,475,549 A 10/1984 Oh
4,501,269 A 2/1985 Bagby
4,506,393 A 3/1985 Murphy
4,509,518 A 4/1985 McGarry et al.
4,534,365 A 8/1985 Bonetta et al.
4,545,375 A 10/1985 Cline
4,549,555 A 10/1985 Fraser et al.
4,562,598 A 1/1986 Kranz
4,565,192 A 1/1986 Shapiro
4,567,886 A 2/1986 Peterson
4,574,794 A 3/1986 Cooke et al.
4,583,554 A 4/1986 Mittelman et al.
4,583,555 A 4/1986 Malcom et al.
4,621,630 A 11/1986 Kenna
4,632,111 A 12/1986 Roche
4,641,648 A 2/1987 Shapiro
4,646,729 A 3/1987 Kenna et al.
4,662,372 A 5/1987 Sharkany et al.
4,663,720 A 5/1987 Duret et al.
4,695,283 A 9/1987 Aldinger
4,703,751 A 11/1987 Pohl
4,704,686 A 11/1987 Aldinger
4,711,233 A 12/1987 Brown
4,715,860 A 12/1987 Amstutz et al.
4,718,413 A 1/1988 Johnson
4,718,916 A 1/1988 Morscher
4,719,907 A 1/1988 Banko et al.
4,721,104 A 1/1988 Kaufman et al.
4,739,751 A 4/1988 Sapega et al.
4,787,383 A 11/1988 Kenna
4,791,934 A 12/1988 Brunnett
4,800,874 A 1/1989 David et al.
4,822,365 A 4/1989 Walker et al.
4,834,080 A 5/1989 Brown
4,834,757 A 5/1989 Brantigan
4,838,891 A 6/1989 Branemark et al.
4,841,975 A 6/1989 Woolson
4,846,161 A 7/1989 Roger
4,860,735 A 8/1989 Davey et al.
4,888,022 A 12/1989 Huebsch
4,893,619 A 1/1990 Dale et al.
4,896,663 A 1/1990 Vandewalls
4,911,721 A 3/1990 Andergaten 3 et al.
4,913,163 A 4/1990 Roger et al.
4,927,422 A 5/1990 Engelhardt
4,935,023 A 6/1990 Whiteside et al.
4,936,852 A 6/1990 Kent et al.
4,936,862 A 6/1990 Walker et al.
4,952,213 A 8/1990 Bowman et al.
4,959,066 A 9/1990 Dunn et al.
4,961,740 A 10/1990 Ray et al.
4,961,954 A 10/1990 Goldberg et al.
4,964,865 A 10/1990 Burkhead et al.
4,976,737 A 12/1990 Leake
4,979,949 A 12/1990 Matsen, III et al.
4,979,957 A 12/1990 Hodorek
4,985,037 A 1/1991 Petersen
5,002,579 A 3/1991 Copf et al.
5,007,912 A 4/1991 Albrektsson et al.
5,007,936 A 4/1991 Woolson
5,015,247 A 5/1991 Michelson
5,030,221 A 7/1991 Buechel et al.
5,032,132 A 7/1991 Matsen, III et al.
5,035,700 A 7/1991 Kenna
5,041,117 A 8/1991 Engelhardt
5,053,037 A 10/1991 Lackey
5,053,039 A 10/1991 Hofmann et al.
5,060,678 A 10/1991 Bauman et al.
5,061,286 A 10/1991 Lyle
5,062,843 A 11/1991 Mahony, III
5,084,050 A 1/1992 Draenert
5,086,401 A 2/1992 Glassman et al.
5,092,869 A 3/1992 Waldron
5,098,383 A 3/1992 Hemmy et al.
5,098,436 A 3/1992 Ferrante et al.
5,098,437 A 3/1992 Kashuba et al.
5,100,689 A 3/1992 Goldberg et al.
5,108,401 A 4/1992 Insall et al.
5,111,987 A 5/1992 Moeinzadeh et al.
5,122,144 A 6/1992 Bert et al.
5,123,906 A 6/1992 Kelman
5,129,908 A 7/1992 Petersen
5,129,909 A 7/1992 Sutherland
5,133,660 A 7/1992 Fenick
5,133,760 A 7/1992 Petersen et al.
5,147,365 A 9/1992 Whitlock et al.
5,150,304 A 9/1992 Berchem et al.
5,152,744 A 10/1992 Krause et al.
5,152,778 A 10/1992 Bales, Jr. et al.
5,154,717 A 10/1992 Matsen, III et al.
5,171,243 A 12/1992 Kashuba et al.
5,171,244 A 12/1992 Caspari et al.
5,171,276 A 12/1992 Caspari et al.
5,174,300 A 12/1992 Bales et al.
5,176,684 A 1/1993 Ferrante et al.
5,176,702 A 1/1993 Bales et al.
5,186,174 A 2/1993 Schloendorff et al.
5,192,327 A 3/1993 Brantigan
5,197,488 A 3/1993 Kovacevic
5,197,971 A 3/1993 Bonutti
5,197,987 A 3/1993 Koch et al.
5,207,680 A 5/1993 Dietz et al.
5,207,692 A 5/1993 Kraus et al.
5,211,165 A 5/1993 Dumoulin et al.
5,217,463 A 6/1993 Mikhail
5,228,459 A 7/1993 Caspari et al.
5,234,433 A 8/1993 Bert et al.
5,242,448 A 9/1993 Pettine et al.
5,251,635 A 10/1993 Dumoulin et al.
5,255,680 A 10/1993 Darrow et al.
5,258,032 A 11/1993 Bertin
5,261,915 A 11/1993 Durlacher et al.
5,263,498 A 11/1993 Caspari et al.
5,263,987 A 11/1993 Shah
5,265,610 A 11/1993 Darrow et al.
5,269,785 A 12/1993 Bonutti
5,273,524 A 12/1993 Fox et al.
5,274,565 A 12/1993 Reuben
5,275,603 A 1/1994 Ferrante et al.
5,282,803 A * 2/1994 Lackey 606/80
5,285,773 A 2/1994 Bonutti et al.
5,299,288 A 3/1994 Glassman et al.
5,300,077 A 4/1994 Howell
5,304,181 A 4/1994 Caspari et al.
5,305,244 A 4/1994 Newman et al.
5,308,349 A 5/1994 Mikhail
5,314,482 A 5/1994 Goodfellow et al.
5,320,529 A 6/1994 Pompa
5,320,625 A 6/1994 Bertin
5,322,505 A 6/1994 Krause et al.
5,342,366 A 8/1994 Whiteside et al.

(56) **References Cited**

U.S. PATENT DOCUMENTS

5,342,367	A	8/1994	Ferrante et al.
5,342,368	A	8/1994	Petersen
5,344,423	A	9/1994	Dietz et al.
5,344,458	A	9/1994	Bonutti
5,360,016	A	11/1994	Kovacevic
5,360,446	A	11/1994	Kennedy
5,364,402	A	11/1994	Mumme et al.
5,368,858	A	11/1994	Hunziker
5,370,692	A	12/1994	Fink et al.
5,370,699	A	12/1994	Hood et al.
5,382,249	A	1/1995	Fletcher
5,383,454	A	1/1995	Bucholz
5,383,937	A	1/1995	Mikhail
5,390,683	A	2/1995	Pisharodi
5,395,376	A	3/1995	Caspari et al.
5,405,395	A	4/1995	Coates
5,408,409	A	4/1995	Glassman et al.
D358,647	S	5/1995	Cohen et al.
5,415,662	A	5/1995	Ferrante et al.
5,417,694	A	5/1995	Marik et al.
5,423,827	A	6/1995	Mumme et al.
5,440,496	A	8/1995	Andersson et al.
5,443,475	A	8/1995	Auerbach et al.
5,445,639	A	8/1995	Kuslich et al.
5,445,642	A	8/1995	McNulty et al.
5,448,489	A	9/1995	Reuben
5,452,407	A	9/1995	Crook
5,454,816	A	10/1995	Ashby
5,456,268	A	10/1995	Bonutti
5,458,645	A	10/1995	Bertin
5,462,549	A	10/1995	Glock
5,470,354	A	11/1995	Hershberger et al.
5,472,415	A	12/1995	King et al.
5,474,559	A	12/1995	Bertin et al.
5,486,178	A	1/1996	Hodge
5,490,854	A	2/1996	Fisher et al.
5,496,324	A	3/1996	Barnes
5,497,933	A	3/1996	DeFonzo et al.
5,507,833	A	4/1996	Bohn
5,510,066	A	4/1996	Fink et al.
5,514,139	A	5/1996	Goldstein et al.
5,514,143	A	5/1996	Bonutti et al.
5,514,519	A	5/1996	Neckers
5,518,680	A	5/1996	Cima et al.
5,520,692	A	5/1996	Ferrante
5,520,694	A	5/1996	Dance et al.
5,520,695	A	5/1996	Luckman
5,522,897	A	6/1996	King et al.
5,527,317	A	6/1996	Ashby et al.
5,539,649	A	7/1996	Walsh et al.
5,540,695	A	7/1996	Levy
5,549,683	A	8/1996	Bonutti
5,554,190	A	9/1996	Draenert
5,560,096	A	10/1996	Stephens
5,562,674	A	10/1996	Stalcup et al.
5,562,675	A	10/1996	McNulty et al.
5,569,163	A	10/1996	Francis et al.
5,569,261	A	10/1996	Marik et al.
5,571,110	A	11/1996	Matsen, III et al.
5,578,037	A	11/1996	Sanders et al.
5,578,039	A	11/1996	Vendrely et al.
5,586,558	A	12/1996	Riley
5,593,448	A	1/1997	Dong
5,595,703	A	1/1997	Swaelens et al.
5,597,379	A	1/1997	Haines et al.
5,601,563	A	2/1997	Burke et al.
5,607,431	A	3/1997	Dudasik et al.
5,609,603	A	3/1997	Linden
5,620,448	A	4/1997	Puddu
5,624,444	A	4/1997	Wixon et al.
5,634,927	A	6/1997	Houston et al.
5,643,272	A	7/1997	Haines et al.
5,649,947	A	7/1997	Auerbach et al.
5,653,714	A	8/1997	Dietz et al.
5,658,294	A	8/1997	Sederholm
5,662,656	A	9/1997	White
5,667,511	A	9/1997	Vendrely et al.
5,667,512	A	9/1997	Johnson
5,677,107	A	10/1997	Neckers
5,681,316	A	10/1997	DeOrio et al.
5,681,354	A	10/1997	Eckhoff
5,682,886	A	11/1997	Delp et al.
5,683,397	A	11/1997	Vendrely et al.
5,683,398	A	11/1997	Carls et al.
5,688,279	A	11/1997	McNulty et al.
5,688,280	A	11/1997	Booth, Jr. et al.
5,690,635	A	11/1997	Matsen, III et al.
5,701,370	A	12/1997	Muhs et al.
5,702,447	A	12/1997	Walch et al.
5,702,460	A	12/1997	Carls et al.
5,702,475	A	12/1997	Zahedi
5,704,941	A	1/1998	Jacober et al.
5,707,350	A	1/1998	Krause et al.
5,711,299	A	1/1998	Manwaring
5,716,360	A	2/1998	Baldwin et al.
5,719,743	A	2/1998	Jenkins et al.
5,719,744	A	2/1998	Jenkins et al.
5,720,752	A	2/1998	Elliott et al.
5,722,978	A	3/1998	Jenkins, Jr.
5,725,376	A	3/1998	Poirier
5,725,593	A	3/1998	Caracciolo
5,733,292	A	3/1998	Gustilo et al.
5,735,277	A	4/1998	Schuster
5,748,767	A	5/1998	Raab
5,749,875	A	5/1998	Puddu
5,749,876	A	5/1998	Duvillier et al.
5,755,803	A	5/1998	Haines et al.
5,757,339	A	5/1998	Williams et al.
5,762,125	A	6/1998	Mastrorio
5,768,134	A	6/1998	Swaelens et al.
5,769,855	A	6/1998	Bertin et al.
5,776,201	A	7/1998	Colleran et al.
5,788,700	A	8/1998	Morawa et al.
5,791,212	A	8/1998	Han
5,792,143	A	8/1998	Samuelson et al.
5,798,924	A	8/1998	Eufinger et al.
5,799,055	A	8/1998	Peshkin et al.
5,799,099	A	8/1998	Wang et al.
5,810,827	A	9/1998	Haines et al.
5,810,831	A	9/1998	D'Antonio
5,817,097	A	10/1998	Howard et al.
5,824,085	A	10/1998	Sahay et al.
5,844,656	A	12/1998	Ronzani et al.
5,844,824	A	12/1998	Newman et al.
5,860,980	A	1/1999	Axelson, Jr. et al.
5,860,981	A	1/1999	Bertin et al.
5,869,170	A	2/1999	Cima et al.
5,871,018	A	2/1999	Delp et al.
5,871,493	A	2/1999	Sjostrom et al.
5,876,456	A	3/1999	Sederholm et al.
5,879,354	A	3/1999	Haines et al.
5,879,393	A	3/1999	Whiteside et al.
5,879,402	A	3/1999	Lawes et al.
5,885,296	A	3/1999	Masini
5,885,297	A	3/1999	Matsen, III
5,885,298	A	3/1999	Herrington et al.
5,895,389	A	4/1999	Schenk et al.
5,897,559	A	4/1999	Masini
5,899,907	A	5/1999	Johnson
5,899,914	A	5/1999	Zirps et al.
5,901,060	A	5/1999	Schall et al.
5,908,424	A	6/1999	Bertin et al.
5,911,723	A	6/1999	Ashby et al.
5,911,724	A	6/1999	Wehrli
5,913,874	A	6/1999	Berns et al.
5,916,219	A	6/1999	Matsuno et al.
5,925,049	A	7/1999	Gustilo et al.
5,942,370	A	8/1999	Neckers
5,967,777	A	10/1999	Klein et al.
5,967,980	A	10/1999	Ferre et al.
5,976,149	A	11/1999	Masini
5,980,526	A	11/1999	Johnson et al.
5,989,261	A	11/1999	Walker et al.
6,007,537	A	12/1999	Burkinshaw et al.

(56) **References Cited**

U.S. PATENT DOCUMENTS

6,012,456	A	1/2000	Schuerch
6,019,767	A	2/2000	Howell
6,022,350	A	2/2000	Ganem
6,024,746	A	2/2000	Katz
6,033,415	A	3/2000	Mittelstadt et al.
6,034,296	A	3/2000	Elvin et al.
6,056,754	A	5/2000	Haines et al.
6,056,756	A	5/2000	Eng et al.
6,059,831	A	5/2000	Braslow et al.
6,063,095	A	5/2000	Wang et al.
6,066,075	A	5/2000	Poulton
6,077,270	A	6/2000	Katz
6,077,287	A	6/2000	Taylor et al.
6,080,196	A	6/2000	Bertin
6,086,593	A	7/2000	Bonutti
6,090,122	A	7/2000	Sjostrom et al.
6,096,043	A	8/2000	Techiera et al.
6,099,313	A	8/2000	Dorken et al.
6,102,850	A	8/2000	Wang et al.
6,106,529	A	8/2000	Techiera
6,118,845	A	9/2000	Simon et al.
6,120,509	A	9/2000	Wheeler
6,120,510	A	9/2000	Albrektsson et al.
6,120,544	A	9/2000	Grundei et al.
6,126,690	A	10/2000	Ateshian et al.
6,139,574	A	10/2000	Vacanti et al.
6,146,390	A	11/2000	Heilbrun et al.
6,156,069	A	12/2000	Amstutz
6,156,070	A	12/2000	Incavo et al.
6,159,246	A	12/2000	Mendes et al.
6,161,080	A	12/2000	Aouni-Ateshian et al.
6,165,181	A	12/2000	Heilbrun et al.
6,167,145	A	12/2000	Foley et al.
6,176,874	B1	1/2001	Vacanti et al.
6,177,034	B1	1/2001	Ferrone
6,185,315	B1	2/2001	Schmucker et al.
6,187,010	B1	2/2001	Masini
6,195,615	B1	2/2001	Lysen
6,197,064	B1	3/2001	Haines et al.
6,198,794	B1	3/2001	Peshkin et al.
6,205,411	B1	3/2001	DiGioia, III et al.
6,206,927	B1	3/2001	Fell et al.
6,214,051	B1	4/2001	Badorf et al.
6,220,122	B1	4/2001	Forsell et al.
6,228,121	B1	5/2001	Khalili
6,241,671	B1	6/2001	Ritter et al.
6,241,735	B1	6/2001	Marmulla
6,244,141	B1	6/2001	Han
6,246,900	B1	6/2001	Cosman et al.
6,254,604	B1	7/2001	Howell
6,258,127	B1	7/2001	Schmotzer
6,264,698	B1	7/2001	Lawes et al.
6,273,891	B1	8/2001	Masini
6,277,136	B1	8/2001	Bonutti
6,285,902	B1	9/2001	Kienzle, III et al.
6,290,703	B1	9/2001	Ganem
6,290,704	B1	9/2001	Burkinshaw et al.
6,301,593	B1	10/2001	Toyosato
6,314,310	B1	11/2001	Ben-Haim et al.
6,319,006	B1	11/2001	Scherer et al.
6,322,728	B1	11/2001	Brodkin et al.
6,325,806	B1	12/2001	Fox
6,327,491	B1	12/2001	Franklin et al.
6,341,231	B1	1/2002	Ferre et al.
6,343,987	B2	2/2002	Hayama et al.
6,351,659	B1	2/2002	Vilsmeier
6,354,011	B1	3/2002	Albrecht
6,361,506	B1	3/2002	Saenger et al.
6,370,224	B1	4/2002	Simon et al.
6,382,975	B1	5/2002	Poirier
6,383,228	B1	5/2002	Schmotzer
6,391,251	B1	5/2002	Keicher et al.
6,395,005	B1	5/2002	Lovell
6,405,072	B1	6/2002	Cosman
6,406,495	B1	6/2002	Schoch
6,409,722	B1	6/2002	Hoey et al.
6,421,232	B2	7/2002	Sallam
6,424,856	B1	7/2002	Vilsmeier
6,427,698	B1	8/2002	Yoon
6,430,434	B1	8/2002	Mittelstadt
6,434,415	B1	8/2002	Foley et al.
6,442,416	B1	8/2002	Schultz
D462,767	S	9/2002	Meyer et al.
6,445,943	B1	9/2002	Ferre et al.
6,454,811	B1	9/2002	Sherwood et al.
6,458,135	B1	10/2002	Harwin et al.
6,459,948	B1	10/2002	Ateshian et al.
6,461,359	B1	10/2002	Tribus et al.
6,463,351	B1	10/2002	Clynch
6,463,361	B1	10/2002	Wang et al.
6,468,280	B1	10/2002	Saenger et al.
6,468,289	B1	10/2002	Bonutti
6,474,341	B1	11/2002	Hunter et al.
6,478,799	B1	11/2002	Williamson
6,482,209	B1	11/2002	Engh et al.
6,490,467	B1	12/2002	Bucholz et al.
6,491,702	B2	12/2002	Heilbrun et al.
6,493,573	B1	12/2002	Martinelli et al.
6,496,099	B2	12/2002	Wang et al.
6,499,488	B1	12/2002	Hunter et al.
6,503,255	B1	1/2003	Albrektsson et al.
6,510,334	B1	1/2003	Schuster et al.
6,514,259	B2	2/2003	Picard et al.
6,516,212	B1	2/2003	Bladen et al.
6,520,964	B2	2/2003	Tallarida et al.
6,530,958	B1	3/2003	Cima et al.
6,532,482	B1	3/2003	Toyosato
6,533,737	B1	3/2003	Brosseau et al.
6,535,756	B1	3/2003	Simon et al.
6,545,279	B1	4/2003	Yoshida et al.
6,552,899	B2	4/2003	Ronzani et al.
6,554,837	B1	4/2003	Hauri et al.
6,554,838	B2	4/2003	McGovern et al.
6,556,008	B2	4/2003	Thesen
6,558,391	B2	5/2003	Axelson et al.
6,567,681	B1	5/2003	Lindequist
6,575,980	B1	6/2003	Robie et al.
6,575,982	B1	6/2003	Bonutti
6,584,174	B2	6/2003	Schubert et al.
6,591,581	B2	7/2003	Schmieding
6,602,259	B1	8/2003	Masini
6,625,563	B2	9/2003	Kirsch et al.
6,629,999	B1	10/2003	Serafin, Jr.
6,632,225	B2	10/2003	Sanford et al.
6,633,773	B1	10/2003	Reisfeld
6,635,073	B2	10/2003	Bonutti
6,640,127	B1	10/2003	Kosaka et al.
6,642,836	B1	11/2003	Wang et al.
6,646,541	B1	11/2003	Wang et al.
6,662,036	B2	12/2003	Cosman
6,668,941	B2	12/2003	Phillips et al.
6,673,077	B1	1/2004	Katz
6,676,662	B1	1/2004	Bagga et al.
6,687,531	B1	2/2004	Ferre et al.
6,695,848	B2	2/2004	Haines
6,697,664	B2	2/2004	Kienzle, III et al.
6,701,174	B1	3/2004	Krause et al.
6,702,821	B2	3/2004	Bonutti
6,709,462	B2	3/2004	Hanssen
6,711,431	B2	3/2004	Sarin et al.
6,711,432	B1	3/2004	Krause et al.
6,712,824	B2	3/2004	Millard et al.
6,712,856	B1	3/2004	Carignan et al.
6,716,249	B2	4/2004	Hyde
6,724,922	B1	4/2004	Vilsmeier
6,725,077	B1	4/2004	Balloni et al.
6,725,080	B2	4/2004	Melkent et al.
6,738,656	B1	5/2004	Ferre et al.
6,738,657	B1	5/2004	Franklin et al.
6,740,092	B2	5/2004	Lombardo et al.
6,749,638	B1	6/2004	Saladino
6,750,653	B1	6/2004	Zou et al.
6,766,878	B2	7/2004	Widmer et al.
6,770,078	B2	8/2004	Bonutti

(56) **References Cited**

U.S. PATENT DOCUMENTS

6,772,026 B2 8/2004 Bradbury et al.
6,780,190 B2 8/2004 Maroney
6,786,930 B2 9/2004 Biscup
6,798,391 B2 9/2004 Peterson, III
6,799,066 B2 9/2004 Steines et al.
6,814,735 B1 11/2004 Zirngibl et al.
6,827,723 B2 12/2004 Carson
6,847,336 B1 1/2005 Lemelson
6,859,660 B2 2/2005 Vilsmeier
6,873,867 B2 3/2005 Vilsmeier
6,892,090 B2 5/2005 Verard et al.
6,905,514 B2 6/2005 Carignan et al.
6,916,324 B2 7/2005 Sanford et al.
6,920,347 B2 7/2005 Simon et al.
6,923,817 B2 8/2005 Carson et al.
6,923,831 B2 8/2005 Fell et al.
6,932,842 B1 8/2005 Litschko et al.
6,934,575 B2 8/2005 Ferre et al.
6,942,475 B2 9/2005 Ensign et al.
6,944,518 B2 9/2005 Roose
6,945,976 B2 9/2005 Ball et al.
6,947,786 B2 9/2005 Simon et al.
6,953,480 B2 10/2005 Mears et al.
6,968,846 B2 11/2005 Viswanathan
6,978,166 B2 12/2005 Foley et al.
6,979,299 B2 12/2005 Peabody et al.
6,990,220 B2 1/2006 Ellis et al.
6,994,549 B2 2/2006 Brodkin et al.
7,029,477 B2 4/2006 Grimm
7,029,479 B2 4/2006 Tallarida et al.
7,048,741 B2 5/2006 Swanson
7,050,877 B2 5/2006 Iseki et al.
7,060,074 B2 6/2006 Rosa et al.
RE39,301 E 9/2006 Bertin
7,104,997 B2 9/2006 Lionberger et al.
7,105,026 B2 9/2006 Johnson et al.
7,115,131 B2 10/2006 Engh et al.
7,141,053 B2 11/2006 Rosa et al.
7,172,597 B2 2/2007 Sanford
7,172,599 B2 2/2007 Steffensmeier et al.
7,175,435 B2 2/2007 Andersson et al.
7,176,466 B2 2/2007 Rousso et al.
7,184,814 B2 2/2007 Lang et al.
7,194,295 B2 3/2007 Vilsmeier
7,198,628 B2 4/2007 Ondrla et al.
7,239,908 B1 7/2007 Alexander et al.
7,255,702 B2 8/2007 Serra et al.
7,258,701 B2 8/2007 Aram et al.
7,261,719 B1 8/2007 Twomey et al.
7,275,218 B2 9/2007 Petrella et al.
7,282,054 B2 10/2007 Steffensmeier et al.
7,294,133 B2 11/2007 Zink et al.
7,297,164 B2 11/2007 Johnson et al.
7,309,339 B2 12/2007 Cusick et al.
7,371,260 B2 5/2008 Malinin
7,383,164 B2 6/2008 Aram et al.
7,388,972 B2 6/2008 Kitson
7,392,076 B2 6/2008 Moctezuma de La Barrera
7,427,272 B2 9/2008 Richard et al.
7,474,223 B2 1/2009 Nycz et al.
7,481,780 B2 1/2009 De Guise et al.
7,488,324 B1 2/2009 Metzger et al.
7,527,631 B2 5/2009 Maroney et al.
7,534,263 B2 5/2009 Burdulis, Jr. et al.
7,539,243 B1 5/2009 Toifl et al.
7,542,791 B2 6/2009 Mire et al.
7,543,239 B2 6/2009 Viswanathan et al.
7,575,602 B2 8/2009 Amirouche et al.
7,582,091 B2 9/2009 Duncan et al.
7,591,821 B2 9/2009 Kelman
7,601,155 B2 10/2009 Peterson
7,604,639 B2 10/2009 Swanson
7,611,516 B2 11/2009 Maroney
7,618,451 B2 11/2009 Berez et al.
7,621,915 B2 11/2009 Federick et al.
7,625,409 B2 12/2009 Saltzman et al.
7,634,119 B2 12/2009 Tsougarakis et al.
7,651,501 B2 1/2010 Penenberg et al.
7,661,170 B2 2/2010 Goode et al.
7,695,477 B2 4/2010 Creger et al.
7,704,253 B2 4/2010 Bastian et al.
7,717,956 B2 5/2010 Lang
7,780,672 B2 8/2010 Metzger
7,796,791 B2 9/2010 Tsougarakis et al.
7,799,077 B2 9/2010 Lang et al.
7,806,896 B1 10/2010 Bonutti
7,824,181 B2 11/2010 Sers
7,887,595 B1 2/2011 Pimenta
7,935,119 B2 5/2011 Ammann et al.
7,963,968 B2 6/2011 Dees, Jr.
7,967,868 B2 6/2011 White et al.
7,981,158 B2 7/2011 Fitz et al.
8,323,288 B2 12/2012 Zajac et al.
8,343,159 B2 1/2013 Bennett et al.
8,357,166 B2 1/2013 Aram et al.
8,361,076 B2 1/2013 Roose et al.
8,377,068 B2 2/2013 Aker et al.
8,398,645 B2 3/2013 Aker et al.
8,419,740 B2 4/2013 Aram et al.
8,425,523 B2 4/2013 Aram et al.
8,425,524 B2 4/2013 Aker et al.
8,594,395 B2 11/2013 Roose et al.
8,979,855 B2 3/2015 Aram et al.
9,173,662 B2 11/2015 Aram et al.
2001/0005797 A1 6/2001 Barlow et al.
2001/0018589 A1 8/2001 Muller
2001/0020143 A1 9/2001 Stark et al.
2001/0034554 A1 10/2001 Pappas
2001/0037155 A1 11/2001 Merchant
2001/0039421 A1 11/2001 Heilbrun et al.
2002/0007294 A1 1/2002 Bradbury et al.
2002/0024450 A1 2/2002 Townsend et al.
2002/0029038 A1 3/2002 Haines
2002/0029045 A1 3/2002 Bonutti
2002/0052606 A1 5/2002 Bonutti
2002/0059049 A1 5/2002 Bradbury et al.
2002/0082741 A1 6/2002 Mazumder et al.
2002/0087062 A1 7/2002 Schmidt et al.
2002/0087274 A1 7/2002 Alexander et al.
2002/0143279 A1 10/2002 Porier et al.
2002/0147415 A1 10/2002 Martelli
2002/0173797 A1 11/2002 Van Zile et al.
2002/0183610 A1 12/2002 Foley et al.
2002/0183760 A1 12/2002 McGovern et al.
2002/0188194 A1 12/2002 Cosman
2002/0198529 A1 12/2002 Masini
2002/0198531 A1 12/2002 Millard et al.
2003/0009234 A1 1/2003 Treacy et al.
2003/0009354 A1* 1/2003 Arbogast G06Q 10/06
705/2
2003/0011624 A1 1/2003 Ellis
2003/0018338 A1 1/2003 Axelson et al.
2003/0028196 A1 2/2003 Bonutti
2003/0055502 A1 3/2003 Lang et al.
2003/0069897 A1 4/2003 Roy et al.
2003/0074248 A1* 4/2003 Braud G06F 19/322
705/7.21
2003/0088179 A1 5/2003 Seeley et al.
2003/0100906 A1 5/2003 Rosa et al.
2003/0100907 A1 5/2003 Rosa et al.
2003/0109784 A1 6/2003 Loh et al.
2003/0120183 A1 6/2003 Simmons
2003/0130665 A1 7/2003 Pinczewski et al.
2003/0158606 A1 8/2003 Coon et al.
2003/0171757 A1 9/2003 Coon et al.
2003/0181935 A1 9/2003 Gardeski et al.
2003/0212403 A1 11/2003 Swanson
2003/0216669 A1 11/2003 Lang et al.
2003/0216741 A1 11/2003 Sanford et al.
2003/0220641 A1 11/2003 Thelen et al.
2003/0225413 A1 12/2003 Sanford et al.
2004/0039259 A1 2/2004 Krause et al.
2004/0039395 A1 2/2004 Coon et al.
2004/0068187 A1 4/2004 Krause et al.

(56) **References Cited**

U.S. PATENT DOCUMENTS

2004/0073279 A1 4/2004 Malackowski et al.
2004/0092932 A1 5/2004 Aubin et al.
2004/0098133 A1* 5/2004 Carignan A61F 2/30942 623/20.35
2004/0102785 A1 5/2004 Hodorek et al.
2004/0102852 A1 5/2004 Johnson et al.
2004/0102866 A1 5/2004 Harris et al.
2004/0106926 A1 6/2004 Leitner et al.
2004/0115586 A1 6/2004 Andreiko et al.
2004/0122439 A1 6/2004 Dwyer et al.
2004/0122787 A1 6/2004 Avinash et al.
2004/0122790 A1 6/2004 Walker et al.
2004/0124964 A1 7/2004 Wang et al.
2004/0128026 A1 7/2004 Harris et al.
2004/0133276 A1 7/2004 Lang et al.
2004/0138670 A1 7/2004 Metzger
2004/0138754 A1 7/2004 Lang et al.
2004/0143336 A1 7/2004 Burkinshaw
2004/0147927 A1 7/2004 Tsougarakis et al.
2004/0153079 A1 8/2004 Tsougarakis et al.
2004/0153087 A1 8/2004 Sanford et al.
2004/0158254 A1 8/2004 Eisermann
2004/0162619 A1 8/2004 Blaylock et al.
2004/0167390 A1 8/2004 Alexander et al.
2004/0171924 A1 9/2004 Mire et al.
2004/0172137 A1 9/2004 Blaylock et al.
2004/0181144 A1 9/2004 Cinquin et al.
2004/0185422 A1 9/2004 Ulrich et al.
2004/0204760 A1 10/2004 Fitz et al.
2004/0220583 A1 11/2004 Pieczynski et al.
2004/0236424 A1 11/2004 Berez et al.
2004/0243481 A1 12/2004 Bradbury et al.
2004/0249385 A1 12/2004 Faoro
2004/0254584 A1 12/2004 Sarin et al.
2004/0260301 A1 12/2004 Lionberger et al.
2005/0015003 A1 1/2005 Lachner et al.
2005/0015022 A1 1/2005 Richard et al.
2005/0027303 A1 2/2005 Lionberger et al.
2005/0027361 A1 2/2005 Reiley
2005/0037320 A1 2/2005 Poirier
2005/0043835 A1 2/2005 Christensen
2005/0043837 A1 2/2005 Rubbert et al.
2005/0049524 A1 3/2005 Lefevre et al.
2005/0049603 A1 3/2005 Calton et al.
2005/0059873 A1 3/2005 Glozman et al.
2005/0065628 A1 3/2005 Roose
2005/0070897 A1 3/2005 Petersen
2005/0075641 A1 4/2005 Singhatat et al.
2005/0096535 A1 5/2005 de la Barrera
2005/0113840 A1 5/2005 Metzger et al.
2005/0113841 A1 5/2005 Sheldon et al.
2005/0113846 A1 5/2005 Carson
2005/0119664 A1 6/2005 Carignan et al.
2005/0131662 A1 6/2005 Ascenzi et al.
2005/0133955 A1 6/2005 Christensen
2005/0137708 A1 6/2005 Clark
2005/0148843 A1 7/2005 Roose
2005/0149042 A1 7/2005 Metzger
2005/0170311 A1 8/2005 Tardieu et al.
2005/0171545 A1 8/2005 Walsh et al.
2005/0177170 A1 8/2005 Fisher et al.
2005/0182315 A1 8/2005 Ritter et al.
2005/0203536 A1 9/2005 Laffargue et al.
2005/0203540 A1 9/2005 Broyles
2005/0222573 A1 10/2005 Branch et al.
2005/0234461 A1 10/2005 Burdulis, Jr. et al.
2005/0234468 A1 10/2005 Carson
2005/0244239 A1 11/2005 Shimp
2005/0245934 A1 11/2005 Tuke et al.
2005/0245936 A1 11/2005 Tuke et al.
2005/0261697 A1 11/2005 Canonaco et al.
2005/0267584 A1 12/2005 Burdulis et al.
2005/0273113 A1 12/2005 Kuczynski
2005/0273114 A1 12/2005 Novak
2005/0283252 A1 12/2005 Coon et al.
2005/0283253 A1 12/2005 Coon et al.
2006/0004284 A1 1/2006 Grunschlager et al.
2006/0015120 A1 1/2006 Richard et al.
2006/0030853 A1 2/2006 Haines
2006/0052725 A1 3/2006 Santilli
2006/0058803 A1 3/2006 Cuckler et al.
2006/0058884 A1 3/2006 Aram et al.
2006/0058886 A1 3/2006 Wozencroft
2006/0089621 A1 4/2006 Fard
2006/0093988 A1 5/2006 Swaelens et al.
2006/0094951 A1 5/2006 Dean et al.
2006/0095049 A1 5/2006 Zannis et al.
2006/0100832 A1 5/2006 Bowman
2006/0111722 A1 5/2006 Bouadi
2006/0122616 A1 6/2006 Bennett et al.
2006/0136058 A1 6/2006 Pietrzak
2006/0142657 A1 6/2006 Quaid et al.
2006/0142671 A1 6/2006 Solak
2006/0142774 A1 6/2006 Metzger
2006/0142778 A1 6/2006 Dees
2006/0155380 A1 7/2006 Clemow et al.
2006/0161167 A1 7/2006 Myers et al.
2006/0172261 A1* 8/2006 Garry A61C 13/0004 433/215
2006/0184177 A1 8/2006 Echeverri
2006/0190086 A1 8/2006 Clemow et al.
2006/0195198 A1 8/2006 James
2006/0204932 A1 9/2006 Haymann et al.
2006/0210644 A1 9/2006 Levin
2006/0229723 A1 10/2006 Van Hoeck
2006/0235421 A1 10/2006 Rosa et al.
2006/0271058 A1 11/2006 Ashton et al.
2006/0276796 A1 12/2006 Creger et al.
2006/0276797 A1 12/2006 Botimer
2006/0287733 A1 12/2006 Bonutti
2007/0006887 A1 1/2007 Milton
2007/0015995 A1 1/2007 Lang et al.
2007/0016209 A1 1/2007 Ammann et al.
2007/0027680 A1 2/2007 Ashley et al.
2007/0059665 A1 3/2007 Orentlicher et al.
2007/0066917 A1 3/2007 Hodorek et al.
2007/0083209 A1 4/2007 Schenberger et al.
2007/0083214 A1 4/2007 Duncan et al.
2007/0083266 A1 4/2007 Lang
2007/0100258 A1 5/2007 Shoham et al.
2007/0100462 A1 5/2007 Lang et al.
2007/0118055 A1 5/2007 McCombs
2007/0118243 A1 5/2007 Schroeder et al.
2007/0156066 A1 7/2007 McGinley et al.
2007/0162039 A1 7/2007 Wozencroft
2007/0167741 A1 7/2007 Sherman et al.
2007/0173946 A1 7/2007 Bonutti
2007/0185498 A2 8/2007 Lavallee
2007/0198022 A1 8/2007 Lang et al.
2007/0203430 A1 8/2007 Lang et al.
2007/0203605 A1 8/2007 Melton et al.
2007/0213738 A1 9/2007 Martin et al.
2007/0219639 A1 9/2007 Otto et al.
2007/0225719 A1 9/2007 Stone et al.
2007/0226986 A1 10/2007 Park et al.
2007/0233121 A1 10/2007 Carson et al.
2007/0233136 A1 10/2007 Wozencroft
2007/0233140 A1 10/2007 Metzger et al.
2007/0233141 A1 10/2007 Park et al.
2007/0233269 A1 10/2007 Steines et al.
2007/0233272 A1 10/2007 Boyce et al.
2007/0238069 A1 10/2007 Lovald et al.
2007/0239282 A1 10/2007 Caylor et al.
2007/0239481 A1 10/2007 DiSilvestro et al.
2007/0250169 A1* 10/2007 Lang A61B 5/1076 623/17.12
2007/0253617 A1 11/2007 Arata et al.
2007/0255288 A1 11/2007 Mahfouz et al.
2007/0255412 A1 11/2007 Hajaj et al.
2007/0276224 A1 11/2007 Lang et al.
2007/0276400 A1 11/2007 Moore et al.
2007/0276501 A1 11/2007 Betz et al.
2007/0282451 A1 12/2007 Metzger et al.
2007/0288030 A1* 12/2007 Metzger et al. 606/87

(56) **References Cited**

U.S. PATENT DOCUMENTS

2008/0009952 A1 1/2008 Hodge
2008/0015602 A1 1/2008 Axelson
2008/0015605 A1 1/2008 Collazo
2008/0015607 A1 1/2008 D'Alessio et al.
2008/0021299 A1 1/2008 Meulink
2008/0021567 A1 1/2008 Meulink et al.
2008/0027563 A1 1/2008 Johnson et al.
2008/0051910 A1 2/2008 Kammerzell et al.
2008/0058945 A1 3/2008 Hajaj et al.
2008/0058947 A1 3/2008 Earl et al.
2008/0114370 A1 5/2008 Schoenefeld
2008/0140081 A1 6/2008 Heavener
2008/0140209 A1 6/2008 Iannotti et al.
2008/0146969 A1 6/2008 Kurtz
2008/0147072 A1 6/2008 Park et al.
2008/0161815 A1 7/2008 Schoenefeld et al.
2008/0172125 A1 7/2008 Ek
2008/0183177 A1 7/2008 Fox et al.
2008/0195099 A1 8/2008 Minas
2008/0195107 A1 8/2008 Cuckler et al.
2008/0195216 A1 8/2008 Philipp
2008/0208200 A1 8/2008 Crofford
2008/0215059 A1 9/2008 Carignan et al.
2008/0228189 A1 9/2008 Fox et al.
2008/0234664 A1 9/2008 May et al.
2008/0234683 A1 9/2008 May
2008/0234685 A1 9/2008 Gjerde
2008/0234833 A1 9/2008 Bandoh et al.
2008/0243127 A1 10/2008 Lang et al.
2008/0257363 A1 10/2008 Schoenefeld et al.
2008/0262624 A1 10/2008 White et al.
2008/0269906 A1 10/2008 Iannotti et al.
2008/0275452 A1 11/2008 Lang et al.
2008/0281328 A1 11/2008 Lang et al.
2008/0281329 A1 11/2008 Fitz et al.
2008/0281426 A1 11/2008 Fitz et al.
2008/0287954 A1 11/2008 Kunz et al.
2008/0294266 A1 11/2008 Steinberg
2008/0300600 A1 12/2008 Guelat et al.
2008/0306558 A1 12/2008 Hakki
2008/0312659 A1 12/2008 Metzger et al.
2008/0319448 A1 12/2008 Lavallee et al.
2009/0012526 A1 1/2009 Fletcher
2009/0018546 A1 1/2009 Daley
2009/0024131 A1 1/2009 Metzger et al.
2009/0043556 A1 2/2009 Axelson et al.
2009/0076371 A1 3/2009 Lang et al.
2009/0076512 A1 3/2009 Ammann et al.
2009/0082770 A1 3/2009 Worner et al.
2009/0087276 A1 4/2009 Rose
2009/0088674 A1* 4/2009 Caillouette A61B 5/1071 602/26
2009/0088753 A1 4/2009 Aram et al.
2009/0088754 A1 4/2009 Aker et al.
2009/0088755 A1 4/2009 Aker et al.
2009/0088758 A1 4/2009 Bennett
2009/0088759 A1 4/2009 Aram et al.
2009/0088760 A1 4/2009 Aram et al.
2009/0088761 A1 4/2009 Roose et al.
2009/0088763 A1 4/2009 Aram et al.
2009/0089034 A1 4/2009 Penney et al.
2009/0089081 A1* 4/2009 Haddad A61B 17/157 705/2
2009/0093816 A1 4/2009 Roose et al.
2009/0099567 A1 4/2009 Zajac
2009/0105837 A1 4/2009 Lafosse et al.
2009/0118736 A1 5/2009 Kreuzer
2009/0131941 A1 5/2009 Park et al.
2009/0131942 A1 5/2009 Aker et al.
2009/0138020 A1 5/2009 Park et al.
2009/0149965 A1 6/2009 Quaid
2009/0149977 A1 6/2009 Schendel
2009/0151736 A1 6/2009 Belcher et al.
2009/0157083 A1 6/2009 Park et al.
2009/0163922 A1 6/2009 Meridew et al.
2009/0163923 A1 6/2009 Flett et al.
2009/0164024 A1 6/2009 Rudan et al.
2009/0187193 A1 7/2009 Maroney et al.
2009/0209884 A1 8/2009 Van Vorhis et al.
2009/0209961 A1 8/2009 Ferrante et al.
2009/0222014 A1 9/2009 Bojarski et al.
2009/0222015 A1 9/2009 Park et al.
2009/0222016 A1 9/2009 Park et al.
2009/0228016 A1 9/2009 Alvarez et al.
2009/0234360 A1 9/2009 Alexander
2009/0248044 A1 10/2009 Amiot et al.
2009/0254093 A1 10/2009 White et al.
2009/0254367 A1 10/2009 Belcher et al.
2009/0270868 A1 10/2009 Park et al.
2009/0274350 A1 11/2009 Pavlovskaia et al.
2009/0306676 A1 12/2009 Lang et al.
2009/0307893 A1 12/2009 Burdulis, Jr. et al.
2009/0318836 A1 12/2009 Stone et al.
2010/0016947 A1 1/2010 Dobak et al.
2010/0016984 A1 1/2010 Trabish
2010/0016986 A1 1/2010 Trabish
2010/0023015 A1 1/2010 Park
2010/0030231 A1 2/2010 Revie et al.
2010/0042105 A1 2/2010 Park et al.
2010/0049195 A1 2/2010 Park et al.
2010/0076439 A1 3/2010 Hatch
2010/0076505 A1 3/2010 Borja
2010/0076563 A1 3/2010 Otto et al.
2010/0076571 A1 3/2010 Hatch
2010/0082034 A1 4/2010 Remia
2010/0082035 A1 4/2010 Keefer
2010/0087829 A1 4/2010 Metzger et al.
2010/0094295 A1 4/2010 Schnieders et al.
2010/0105011 A1 4/2010 Karkar et al.
2010/0121335 A1 5/2010 Penenberg et al.
2010/0137869 A1 6/2010 Borja et al.
2010/0137924 A1 6/2010 Tuke et al.
2010/0145343 A1 6/2010 Johnson et al.
2010/0145344 A1 6/2010 Jordan et al.
2010/0152782 A1 6/2010 Stone et al.
2010/0160917 A1 6/2010 Fitz et al.
2010/0168754 A1 7/2010 Fitz et al.
2010/0168857 A1 7/2010 Hatch
2010/0185202 A1 7/2010 Lester et al.
2010/0191244 A1 7/2010 White et al.
2010/0212138 A1 8/2010 Carroll et al.
2010/0217109 A1 8/2010 Belcher
2010/0217270 A1 8/2010 Polinski et al.
2010/0217338 A1 8/2010 Carroll et al.
2010/0228257 A1 9/2010 Bonutti
2010/0249657 A1 9/2010 Nycz et al.
2010/0249796 A1 9/2010 Nycz
2010/0262150 A1 10/2010 Lian
2010/0274253 A1 10/2010 Ure
2010/0281678 A1 11/2010 Burdulis, Jr. et al.
2010/0286700 A1 11/2010 Snider et al.
2010/0292743 A1 11/2010 Singhal et al.
2010/0305573 A1 12/2010 Fitz et al.
2010/0305574 A1 12/2010 Fitz et al.
2010/0324692 A1 12/2010 Uthgenannt et al.
2011/0004317 A1 1/2011 Hacking et al.
2011/0015636 A1 1/2011 Katrana et al.
2011/0015639 A1 1/2011 Metzger et al.
2011/0029091 A1 2/2011 Bojarski et al.
2011/0029116 A1 2/2011 Jordan et al.
2011/0046735 A1 2/2011 Metzger et al.
2011/0054478 A1 3/2011 Vanasse et al.
2011/0066193 A1 3/2011 Lang et al.
2011/0071528 A1 3/2011 Carson
2011/0071529 A1 3/2011 Carson
2011/0071530 A1 3/2011 Carson
2011/0071532 A1 3/2011 Carson
2011/0071533 A1 3/2011 Metzger et al.
2011/0092804 A1 4/2011 Schoenefeld et al.

(56) **References Cited**

U.S. PATENT DOCUMENTS

2011/0093086	A1	4/2011	Witt et al.
2014/0200902	A1	7/2014	Aram et al.
2015/0190145	A1	7/2015	Aram et al.

FOREIGN PATENT DOCUMENTS

CA	2505371			5/2004
CA	2505419			6/2004
CA	2506849			6/2004
CA	2546958			6/2005
CA	2546965			6/2005
CA	2588907			6/2006
CA	2590534			6/2006
CH	117960			5/1927
CN	1630495	A		6/2005
CN	1728976	A		2/2006
CN	1729483	A		2/2006
CN	1729484	A		2/2006
CN	1913844	A		2/2007
CN	101111197	A		1/2008
DE	337437			5/1921
DE	2830566	A1		1/1980
DE	3339259	C1		3/1985
DE	3447365	A1		7/1986
DE	3925488	A1		2/1990
DE	3902249	A1		8/1990
DE	4016704	C1		9/1991
DE	04219939	A1		12/1993
DE	3717871	C3		5/1995
DE	4421153	A1		12/1995
EP	97001	A1		12/1983
EP	0114505	A1		8/1984
EP	0326768	A2		8/1989
EP	337901	A1		10/1989
EP	0579868	A2		1/1994
EP	0645984			4/1995
EP	0650706	A1		5/1995
EP	756735			2/1997
EP	0908836	A2		4/1999
EP	0916324	A2		5/1999
EP	1013231	A2		6/2000
EP	1020734	A2		7/2000
EP	1136041	A2		9/2001
EP	904158	B1		7/2002
EP	1321097	A2		6/2003
EP	1321107	A1		6/2003
EP	709061	B1		7/2003
EP	1348393	A1		10/2003
EP	1437102	A1		7/2004
EP	1486900	A1		12/2004
EP	1498851	A1		1/2005
EP	1 669 033	A1		6/2006
EP	1444957	B1		3/2007
EP	1669033	B1		2/2009
FR	1111677			3/1956
FR	2429582	A1		1/1980
FR	2659226	A1		9/1991
FR	2721195	A1		12/1995
FR	2768916	A1		4/1999
FR	2819168	A1		7/2002
GB	2094590	A		9/1982
GB	2197790	A		6/1988
GB	2426200	A		11/2006
GB	2437003	A		10/2007
GB	2442441	A		4/2008
JP	59157715	A		9/1984
JP	60231208	A		11/1985
JP	2002291706	A		10/2002
KR	20050072500	A		7/2005
KR	20050084024	A		8/2005
RU	2083179	C1		7/1997
RU	2113182	C1		6/1998
RU	2125835	C1		2/1999
RU	2138223	C1		9/1999
RU	2175534	C2		11/2001
RU	2187975	C1		8/2002
TW	I231755			5/2005
WO	8807840	A1		10/1988
WO	PCT/US89/02218		*	9/1989
WO	8909028	A1		10/1989
WO	1989011257	A1		11/1989
WO	9107139	A1		5/1991
WO	93/25157	A1		12/1993
WO	9325157	A1		12/1993
WO	1993025157	A1		12/1993
WO	9413218	A1		6/1994
WO	95/28688	A1		10/1995
WO	9528688	A1		10/1995
WO	1995028688			10/1995
WO	9607361			3/1996
WO	9729703			8/1997
WO	9732671	A1		9/1997
WO	9800072	A1		1/1998
WO	1998032384	A1		7/1998
WO	9901073	A1		1/1999
WO	1999032045	A1		7/1999
WO	9952473	A1		10/1999
WO	9959106	A1		11/1999
WO	0170142	A1		9/2001
WO	0184479	A1		11/2001
WO	0218019			3/2002
WO	2002026145	A2		4/2002
WO	0236024	A1		5/2002
WO	0237935			5/2002
WO	2067783			9/2002
WO	02096268	A2		12/2002
WO	03042968			5/2003
WO	03051210	A2		6/2003
WO	03051211	A1		6/2003
WO	03077101			9/2003
WO	2004000139	A1		12/2003
WO	2004032806	A1		4/2004
WO	2004017842	A2		6/2004
WO	2004049981	A2		6/2004
WO	2004051301	A2		6/2004
WO	2004061744	A2		7/2004
WO	2004069041	A2		8/2004
WO	2004070580	A2		8/2004
WO	2004075771	A1		9/2004
WO	2004078069	A2		9/2004
WO	2004084725	A1		10/2004
WO	2005027755	A1		3/2005
WO	2005051239	A1		6/2005
WO	2005051240	A1		6/2005
WO	2005053564	A2		6/2005
WO	2005077039	A2		8/2005
WO	2005/084558			9/2005
WO	2005/084558	A1		9/2005
WO	2005099636	A1		10/2005
WO	2005119505	A2		12/2005
WO	06058057	A2		6/2006
WO	06060795	A1		6/2006
WO	2006058057	A2		6/2006
WO	2006060795	A1		6/2006
WO	2006092600	A1		9/2006
WO	2006127486	A2		11/2006
WO	2006134345	A1		12/2006
WO	07041375	A2		4/2007
WO	2007053572	A2		5/2007
WO	2007062079	A2		5/2007
WO	2007/097854			8/2007
WO	2007/097854	A2		8/2007
WO	2007092841	A2		8/2007
WO	2007097853	A2		8/2007
WO	2007137327	A1		12/2007
WO	2007145937	A2		12/2007
WO	2008014618	A1		2/2008
WO	2008021494	A2		2/2008
WO	2008040961	A1		4/2008
WO	2008044055	A1		4/2008
WO	2008101090	A2		8/2008
WO	2008112996	A1		9/2008
WO	2008117028	A1		10/2008
WO	2008140748	A1		11/2008

(56) **References Cited**

FOREIGN PATENT DOCUMENTS

WO	2009001083	A1	12/2008
WO	2009025783	A1	2/2009
WO	2009045960	A1	4/2009
WO	2009111512	A2	9/2009
WO	2009129063	A1	10/2009
WO	2009129067	A1	10/2009
WO	2010033431	A1	3/2010

OTHER PUBLICATIONS

Radermacher er at., "Computer Assisted Orthopaedic Surgery with Image Based Individual Templates", Clin Orthopaedics and Related Research 354, 28-38, 1998 (11 pages).
Hafez et al., "Computer-assisted Total Kneed Arthroplasty Using Patient-specific Templating", Clin Orthopaedics and Related Research, 444, 184-192, 2006 (9 pages).
SurgiTAIX AG, "OrthoTAIX for Orthopaedic Surgery." Available at http://www.surgitaix.com/Products/OrthoTAIX/OrthoTAIX.pdf.
Accuracy of CT-Based Patient Specific Total Knee Arthroplasty Instruments; AAHKS 20th Annual Meeting, Submission Record, Submission ID # 4177, Apr. 14, 2010.
"Personalised image-based templates for intra-operative guidance," Proceddings of the Institution of Mechanical Engineers, Part H: Journal of Engineering in Medicine, 111-118.
"A home-based pedometer-driven walking program to increase physical actifvity in order adults with osteoarthritis of the knee: a preliminary study," Journal of the American Geriatrics Society, vol. 51, No. 3, 6 pages.
"Measuring functional abilities of patients with knee problems; rationale and construction of the DynaPort knee test," Knee Surgery, Sports Traumatology, Arthroscopy, vol. 10, pp. 204-212.
"Automated physical activity monitoring: validation and comparison with physiological and self-report measures," Psychophysiology, vol. 30, pp. 296-305.
"Xbus Master: Portable multi-sensor system." [Online] <http://www.xsens.com/index.php?mainmenu=products&submenu=human_motion&subsubmenu=Xbus_Master>, 2 pages.
"MTx: 3DOF Orientation Tracker." [Online] <http://www.xsens.com/index.php?mainmenu=products&submenu=human_motion&subsubmenu=MTx>, 2 pages.
"Moven—inertial motion capturing." [Online] <http://www.xsens.com/index.php?mainmenu=products&submenu=human_motion&subsubmenu=Moven>, 4 pages.
European Search Report for European Patent Application No. 10150487.6-2310, dated May 12, 2010, 6 pages.
European Search Report for European Patent Application No. 0917188.7-2310, dated Sep. 24, 2010, 7 pages.
Chinese First Office Action, Chinese Patent Application No. 200880118434.4, dated Sep. 7, 2011, 12 pages.
PCT Search Report for Application PCT/US2008/078143 (17 pages).
"The Vision and Reality of Wearable Computing", XP-002399700, Apr. 1, 2004, 3 pages.
Hube et al.; Orthopaedic Surgery the Essentials, Chaper 36 Knee Reconstruction; 1999; 12 pages.
Corin Medical Limited; The Corin X-ActTM Instrumentation and Operative Technique; Nov. 1998; 9 pages.
Kraus et al.; A Comparative Assessment of Alignment Angle of the Knee by Radiographic and Physical Examination Methods; Jun. 6, 2005; 6 pages.
Depuy; LCS Total Knee System—Surgical Procedure; 1989; 36 pages.
Engh et al.; Legent II Surgical Technique; The Concept of Personalization—Total Knee Replacement Using the AMK—Legend II; 1992; 31 pages.
Lotke; Knee Arthroplasty; Primary Total Knees—Standard Principles and Techniques; Raven Press, Ltd.; 5 pages; 1995.
Mills et al.; Use of Computer Tomographic Reconstruction in Planning Osteotomies of the Hip; Jan. 1992; 6 pages.
Radermacher et al.; Image Guided Orthopedic Surgery Using Individual Templates; 1997; 10 pages.
Radermacher et al.; Computer Assisted Matching of Planning and Execution in Orthopedic Surgery; 1993; 2 pages.
Radermacher et al.; Technique for Better Execution of CT Scan Planned Orthopedic Surgery on Bone Structures; 1995; 9 pages.
Radermacher et al.; Computer Assisted Orthopaedic Surgery with Image Based Individual Templates; No. 354, pp. 28-38; 1998; 11 pages.
Sharma et al.; The Role of Knee Alignment in Disease Progression and Functional Decline in Knee Osteoarthritis; Jul. 11, 2001; American Medical Association; 10 pages.
Berry, Seedhom, et al., "Personalised image-based templates for intra-operative guidance," Proceedings of the Institution of Mechanical Engineers, Part H: Journal of Engineering in Medicine, 111-118, 2005.
SurgiTAIX AG, "OrthoTAIX for Orthopaedic Surgery." Available at http://www.surgitaix.com/Products/OrthoTAIX/OrthoTAIX.pdf; 2 pages.
Radermacher et al., "Computer-Integrated Orthopaedic Surgery: Connection of Planning and Execution in Surgical Intervention," Computer Integrated Surgery, 451-463, 1995.
Radermacher et al., "CT Image-Based Planning and Execution of Interventions in Orthopedic Surgery Using Individual Templates—Experimental Results and Aspects of Clinical Applications," Computer Assisted Orthopaedic Surgery, L.P Nolte and R. Ganz, eds, 42-52, Hogrefe & Huber Publishing 1999.
Portheine et al.; Development of a clinical demonstrator fro computer assisted orthopedic surgery with CT-image based individual templates; 1997; 6 pages.

* cited by examiner

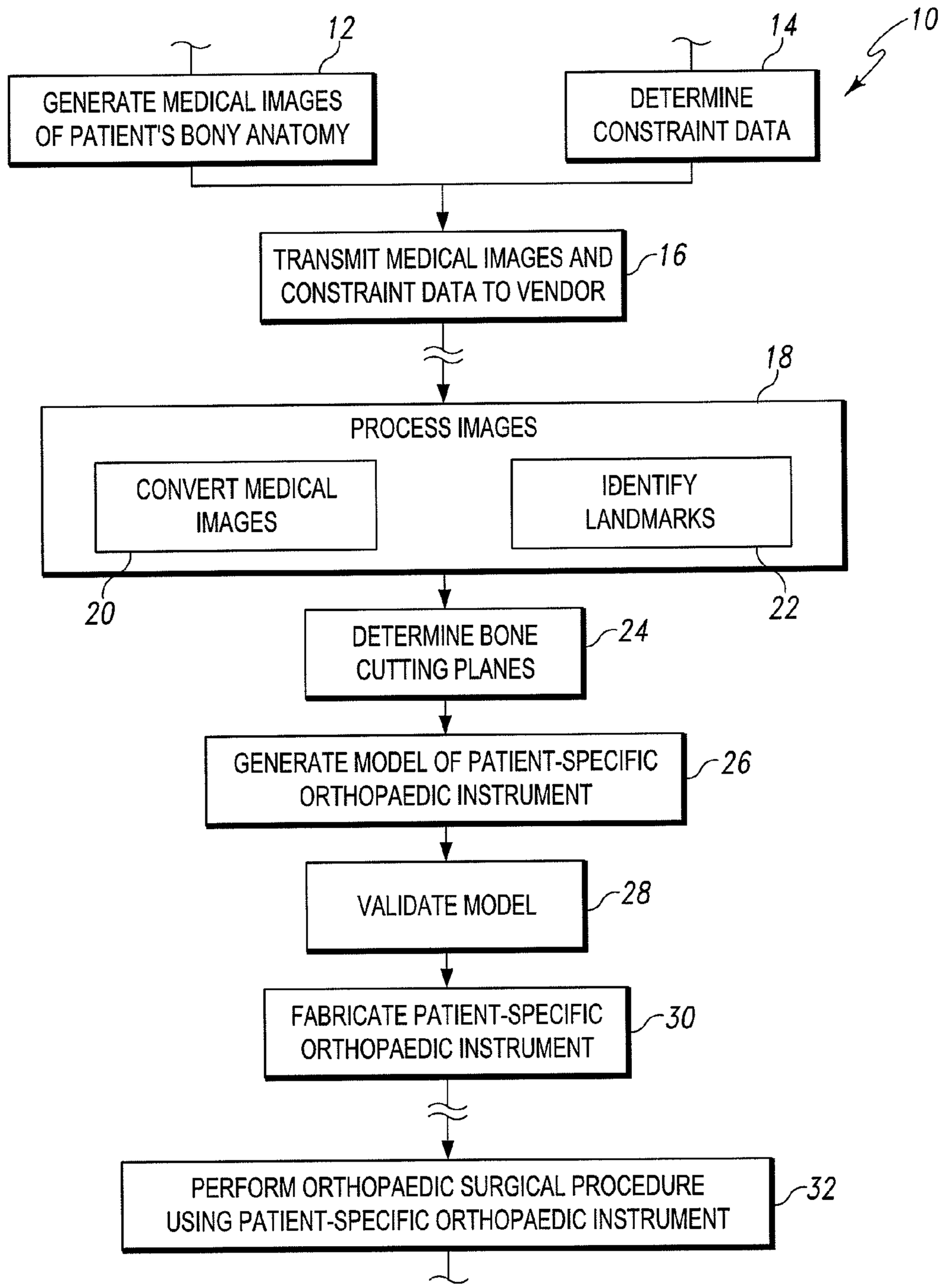
10
12
GENERATE MEDICAL IMAGES OF PATIENT'S BONY ANATOMY
14
DETERMINE CONSTRAINT DATA
TRANSMIT MEDICAL IMAGES AND CONSTRAINT DATA TO VENDOR
16
18
PROCESS IMAGES
CONVERT MEDICAL IMAGES
IDENTIFY LANDMARKS
20
22
DETERMINE BONE CUTTING PLANES
24
GENERATE MODEL OF PATIENT-SPECIFIC ORTHOPAEDIC INSTRUMENT
26
VALIDATE MODEL
28
FABRICATE PATIENT-SPECIFIC ORTHOPAEDIC INSTRUMENT
30
PERFORM ORTHOPAEDIC SURGICAL PROCEDURE USING PATIENT-SPECIFIC ORTHOPAEDIC INSTRUMENT
32

Fig. 1

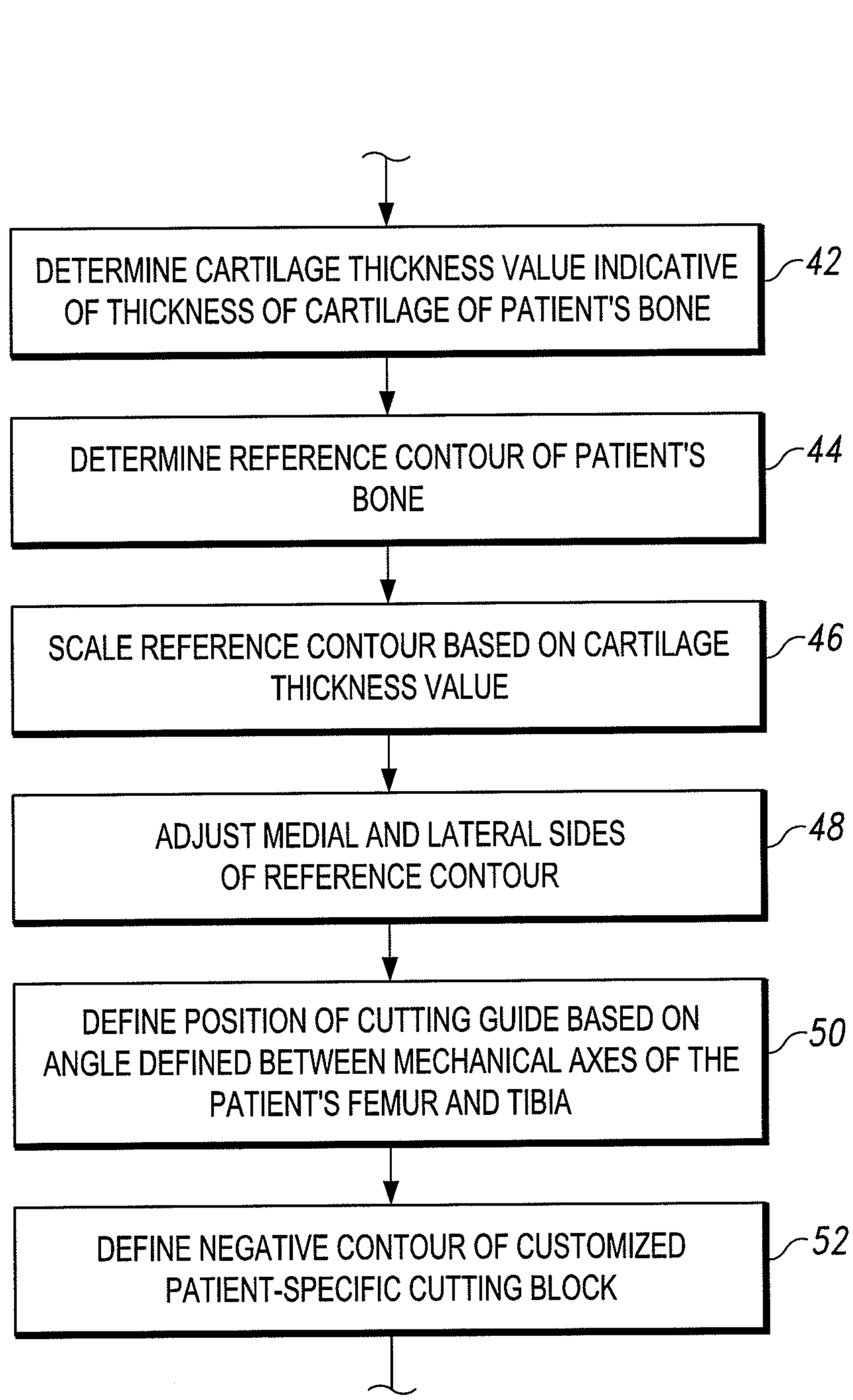
40
DETERMINE CARTILAGE THICKNESS VALUE INDICATIVE OF THICKNESS OF CARTILAGE OF PATIENT'S BONE
42
DETERMINE REFERENCE CONTOUR OF PATIENT'S BONE
44
SCALE REFERENCE CONTOUR BASED ON CARTILAGE THICKNESS VALUE
46
ADJUST MEDIAL AND LATERAL SIDES OF REFERENCE CONTOUR
48
DEFINE POSITION OF CUTTING GUIDE BASED ON ANGLE DEFINED BETWEEN MECHANICAL AXES OF THE PATIENT'S FEMUR AND TIBIA
50
DEFINE NEGATIVE CONTOUR OF CUSTOMIZED PATIENT-SPECIFIC CUTTING BLOCK
52

Fig. 2

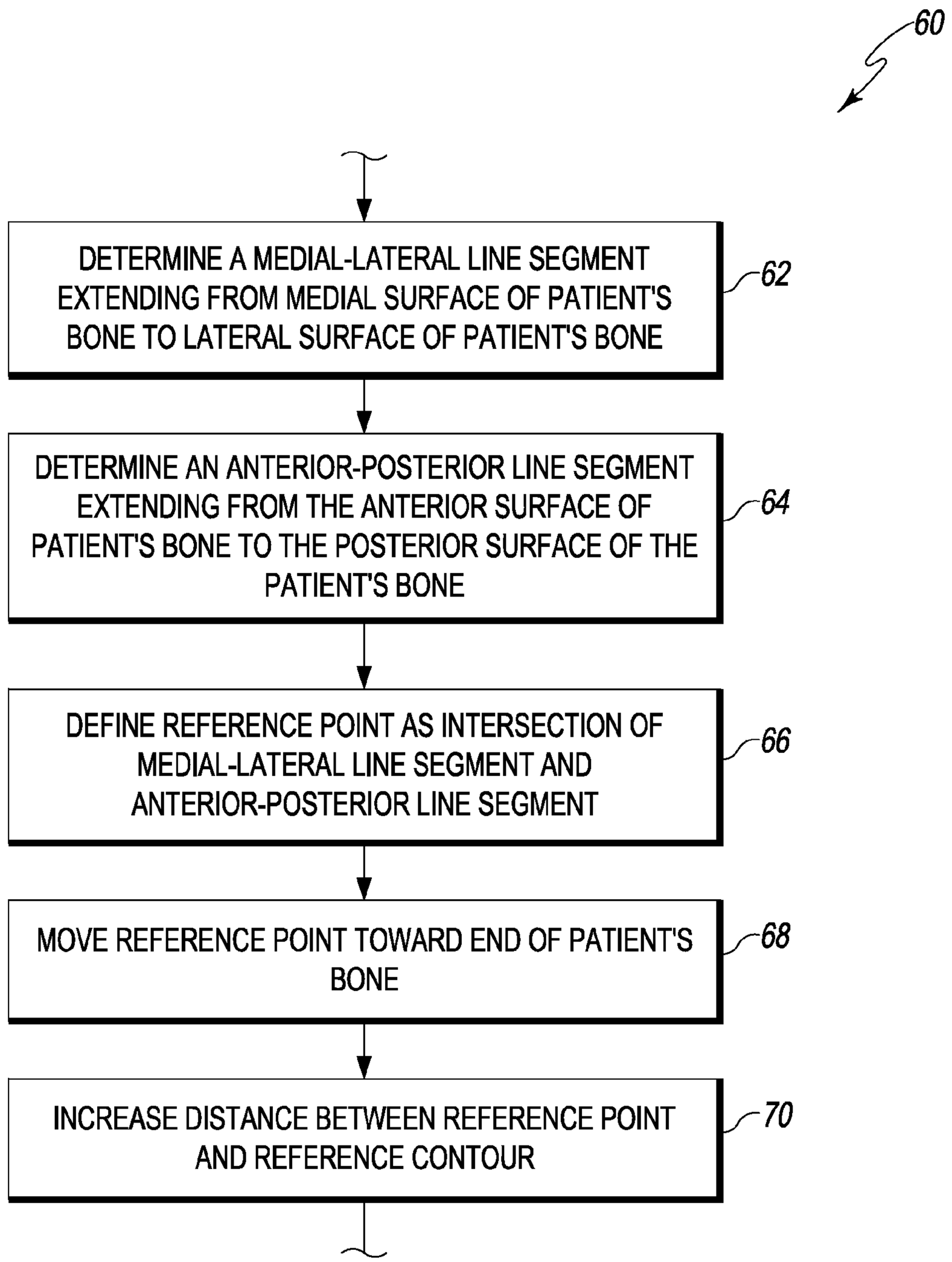
60
DETERMINE A MEDIAL-LATERAL LINE SEGMENT EXTENDING FROM MEDIAL SURFACE OF PATIENT'S BONE TO LATERAL SURFACE OF PATIENT'S BONE
62
DETERMINE AN ANTERIOR-POSTERIOR LINE SEGMENT EXTENDING FROM THE ANTERIOR SURFACE OF PATIENT'S BONE TO THE POSTERIOR SURFACE OF THE PATIENT'S BONE
64
DEFINE REFERENCE POINT AS INTERSECTION OF MEDIAL-LATERAL LINE SEGMENT AND ANTERIOR-POSTERIOR LINE SEGMENT
66
MOVE REFERENCE POINT TOWARD END OF PATIENT'S BONE
68
INCREASE DISTANCE BETWEEN REFERENCE POINT AND REFERENCE CONTOUR
70

Fig. 3

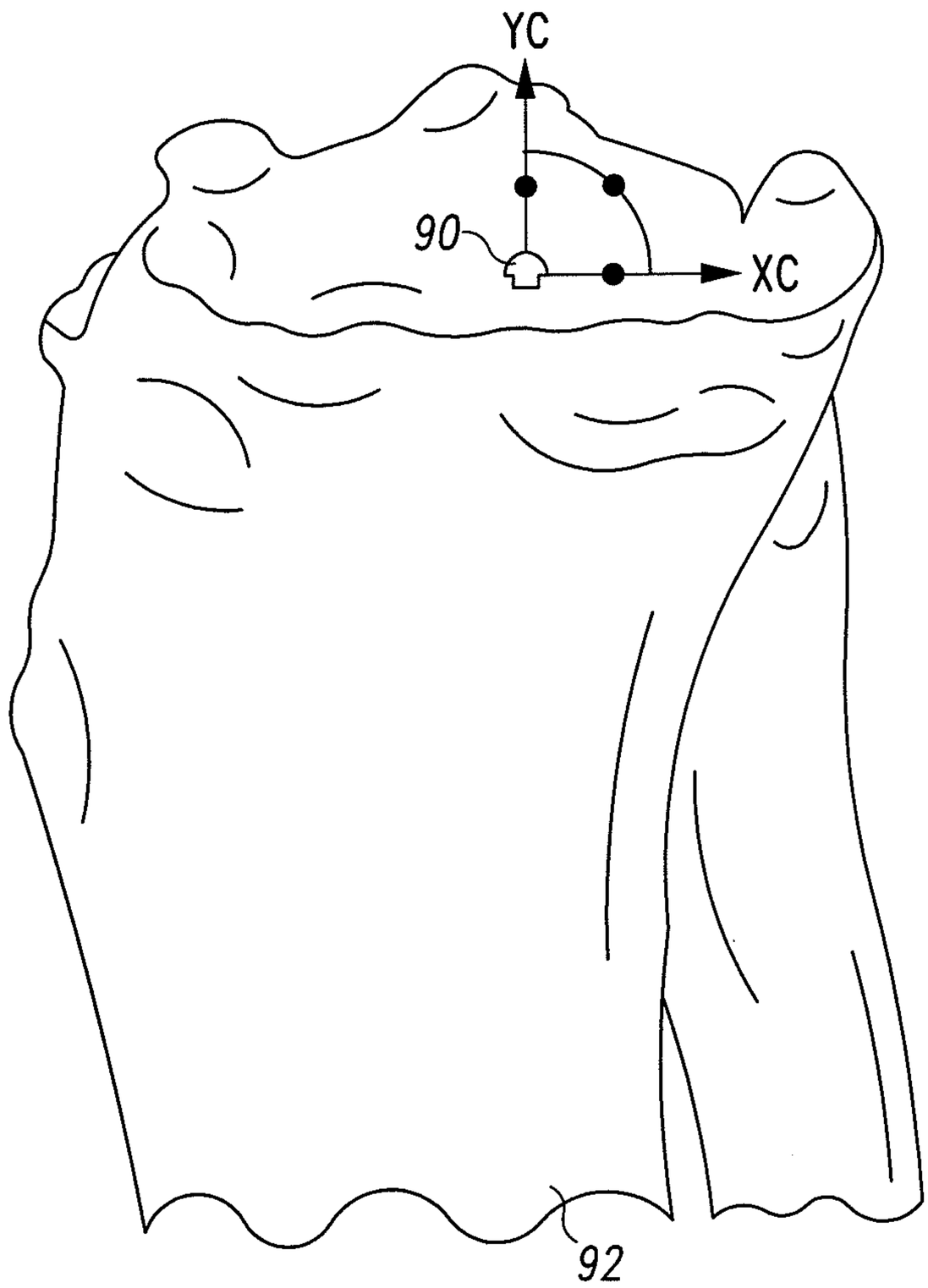

Fig. 4

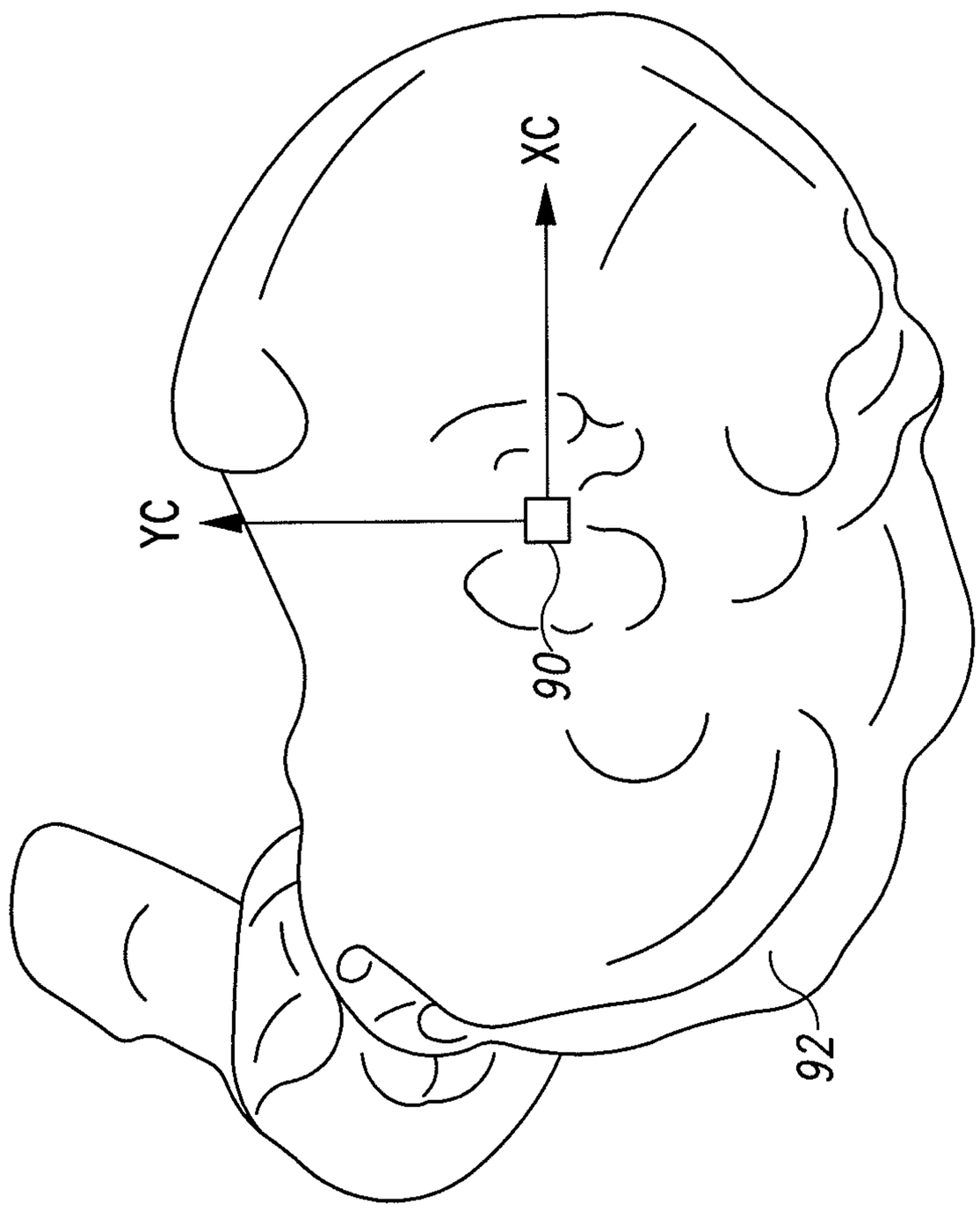

Fig. 5

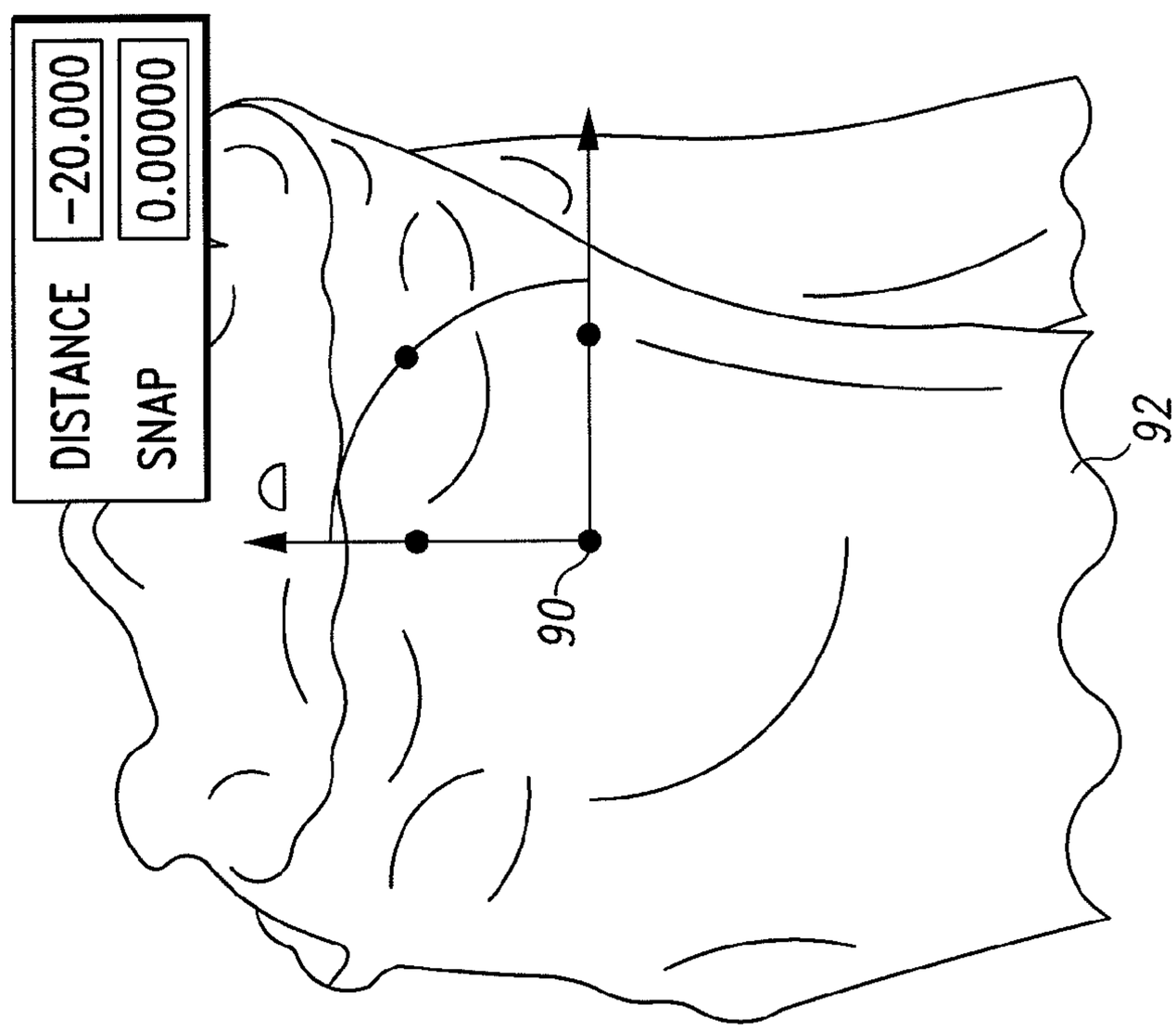

Fig. 6

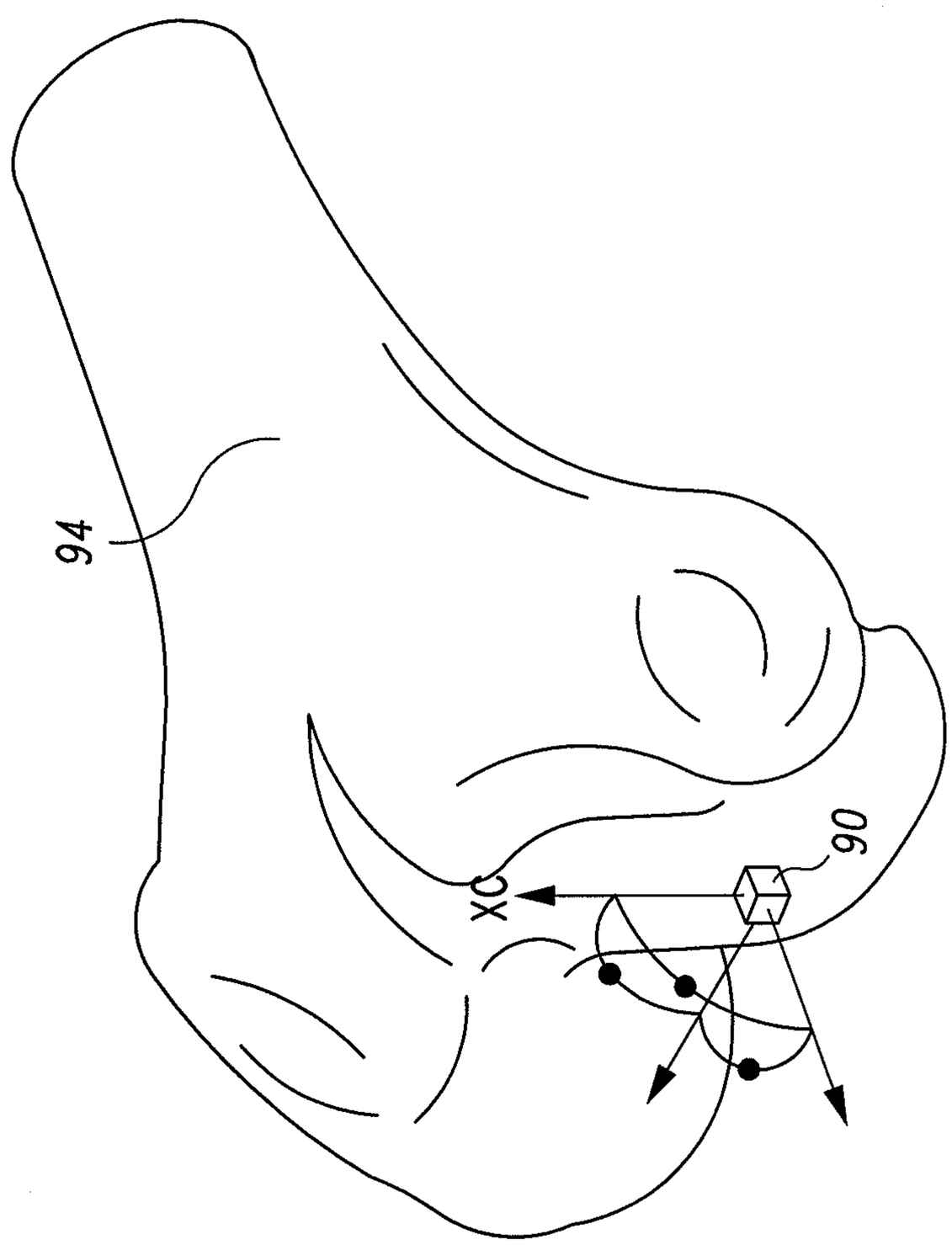

Fig. 7

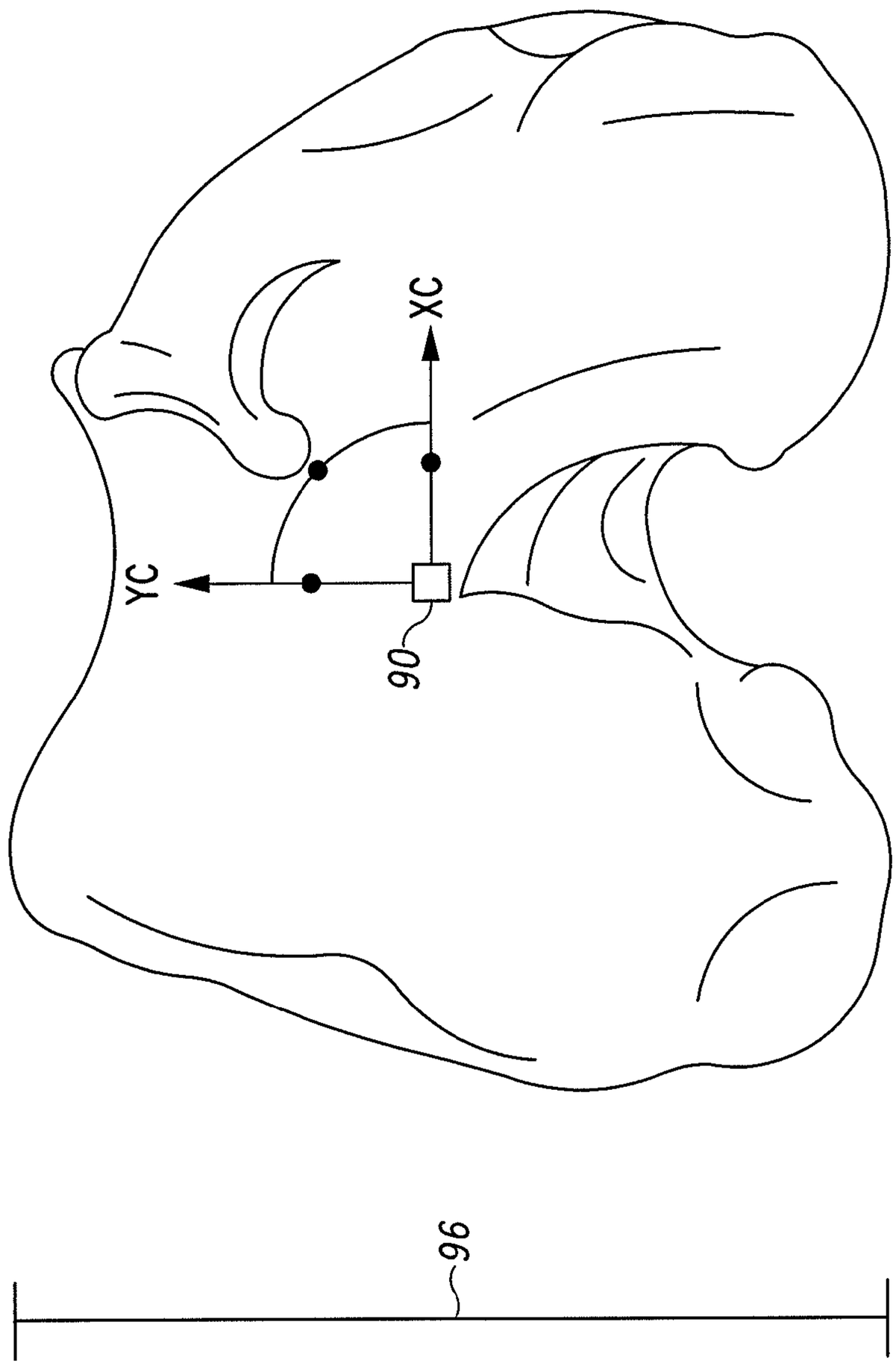

Fig. 8

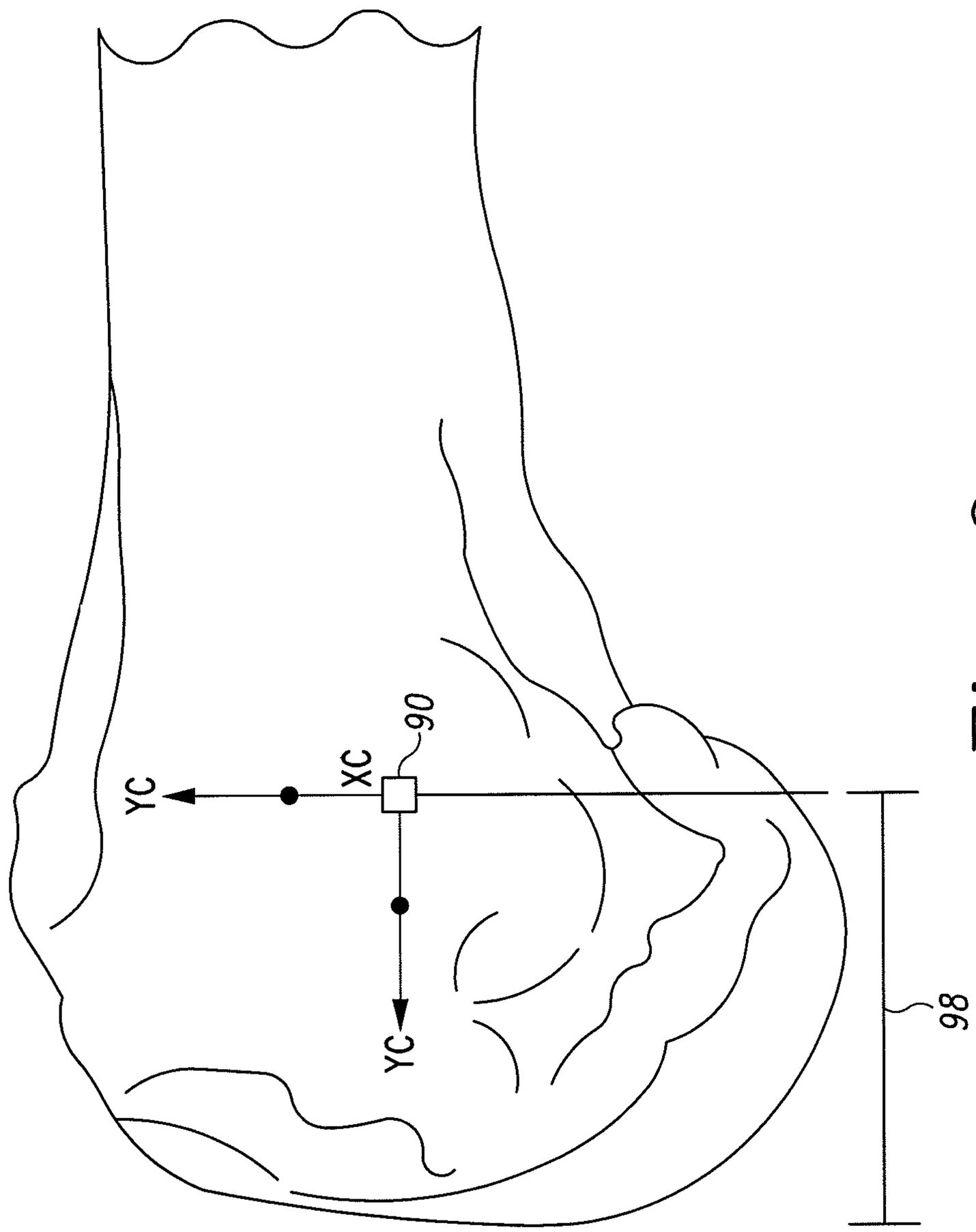

Fig. 9

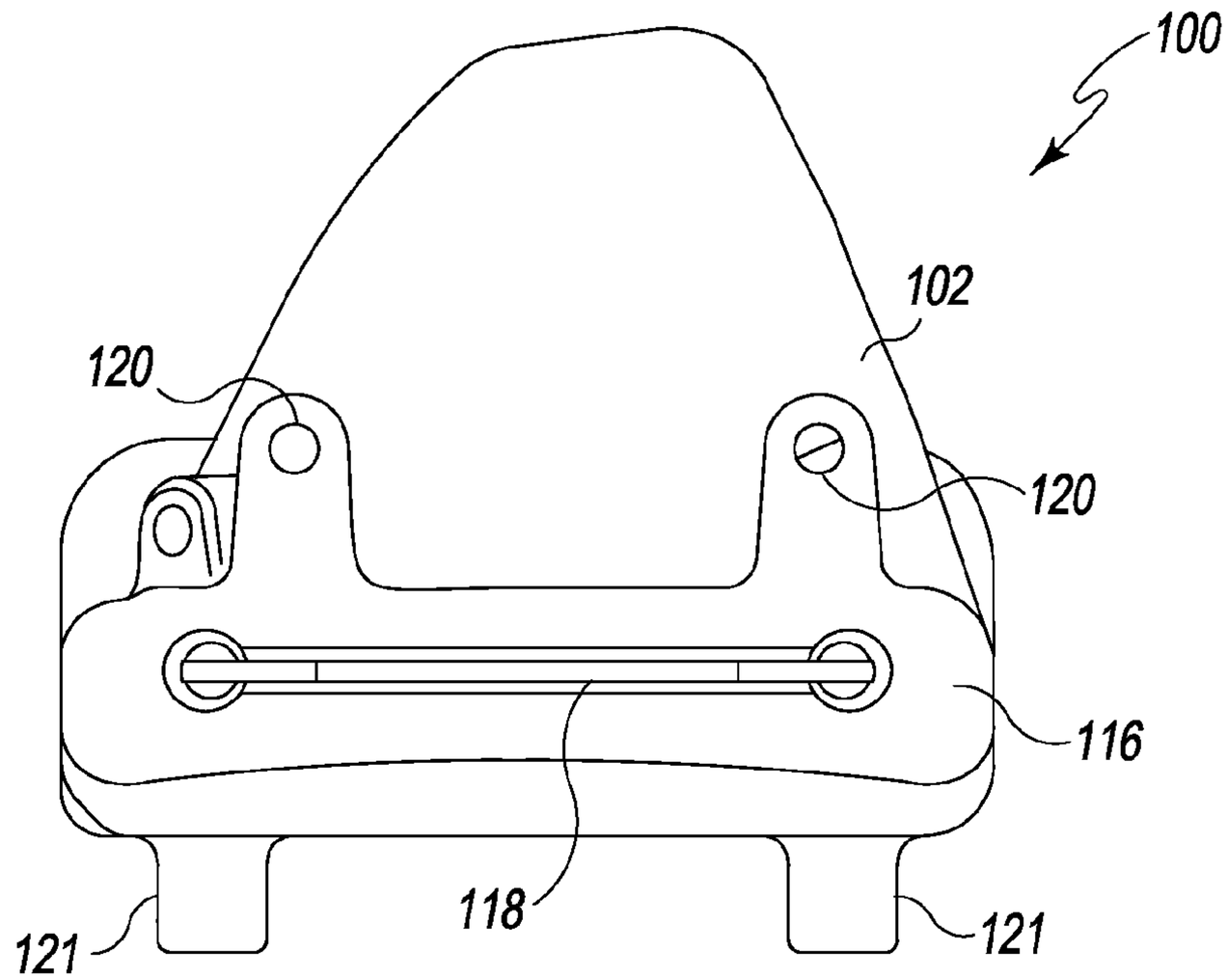
100
102
120
120
116
118
121
121

Fig. 10

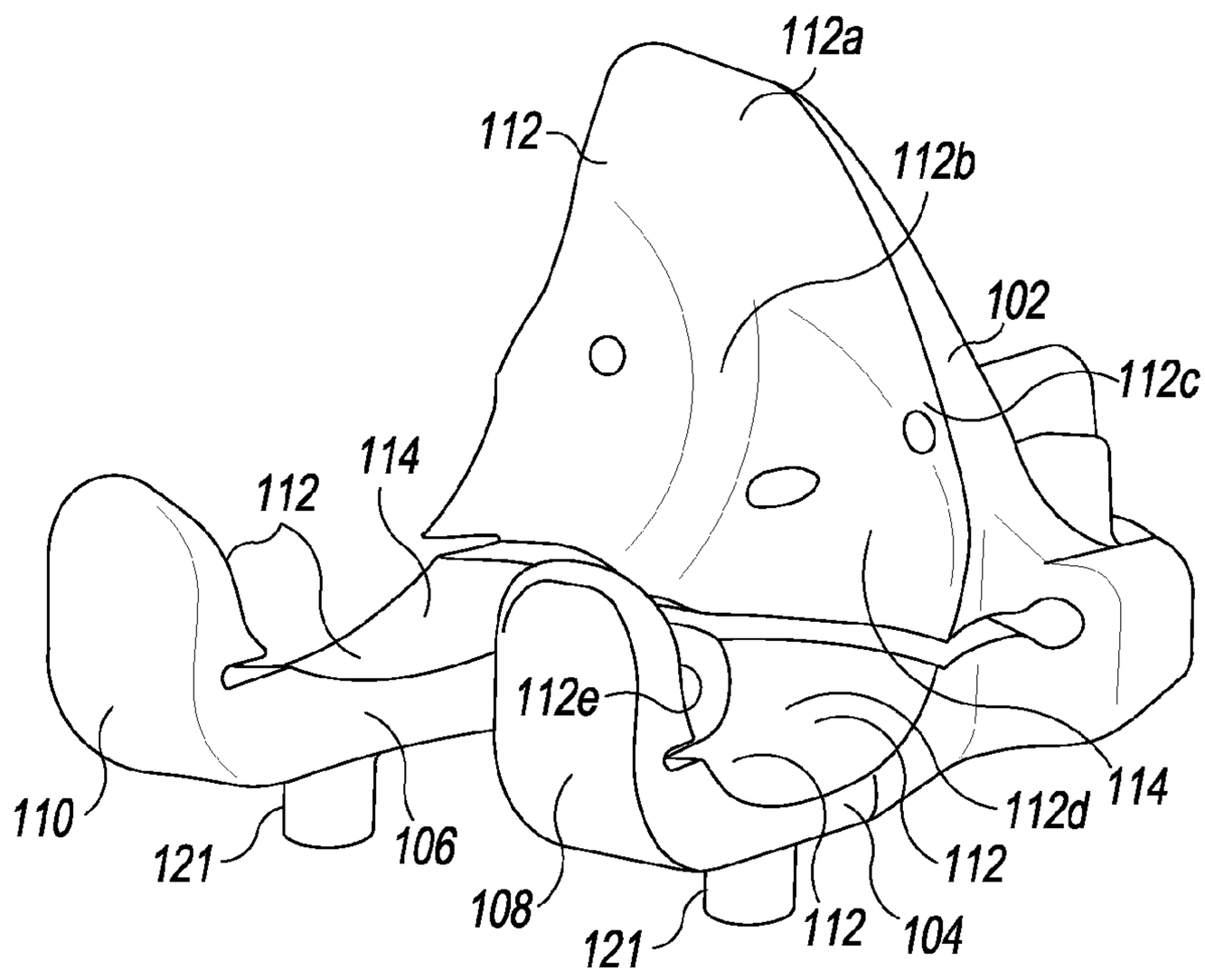
112a
112
112b
102
112c
114
112
112e
110
121
106
108
121
112
104
112
112d
114

Fig. 11

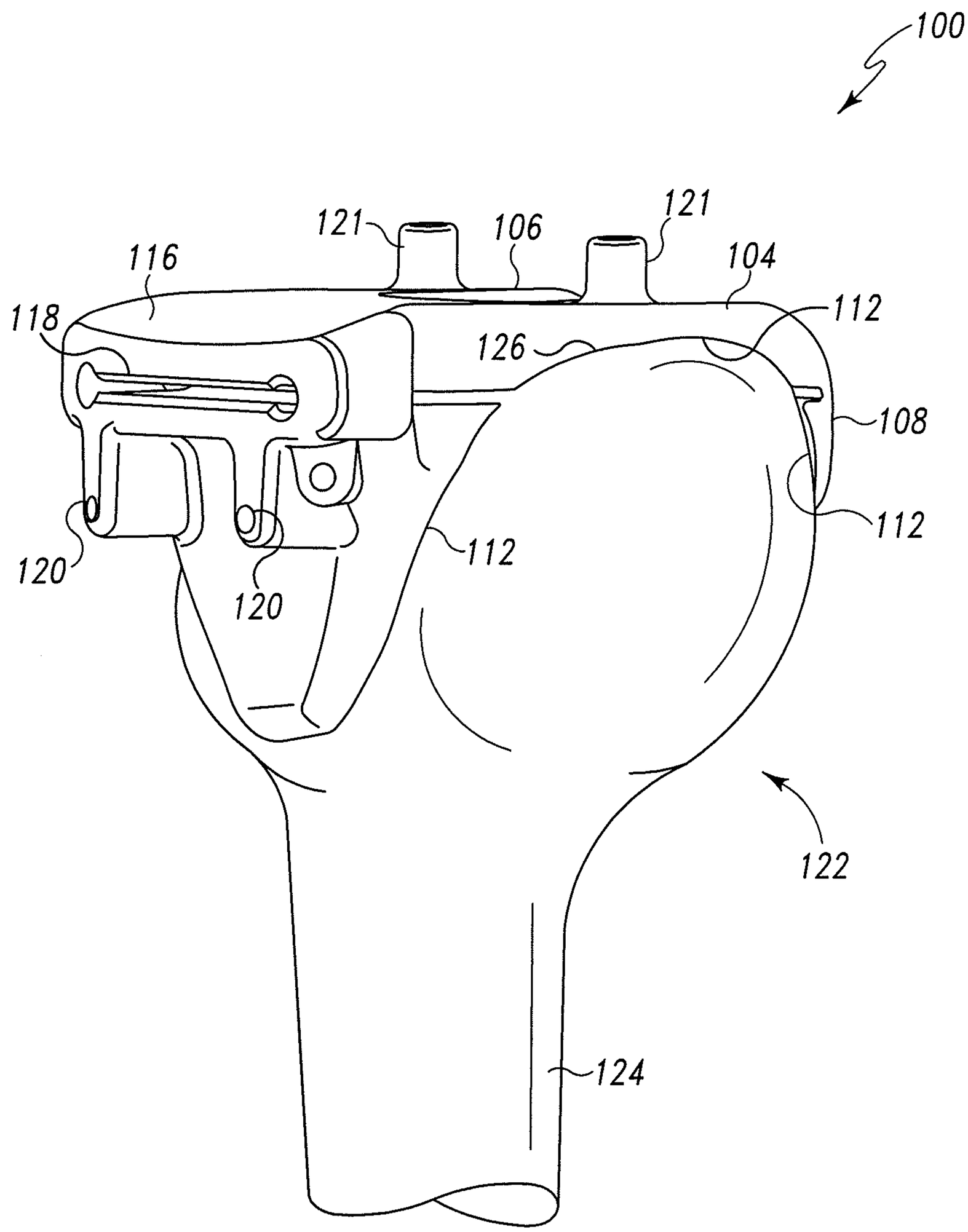

Fig. 12

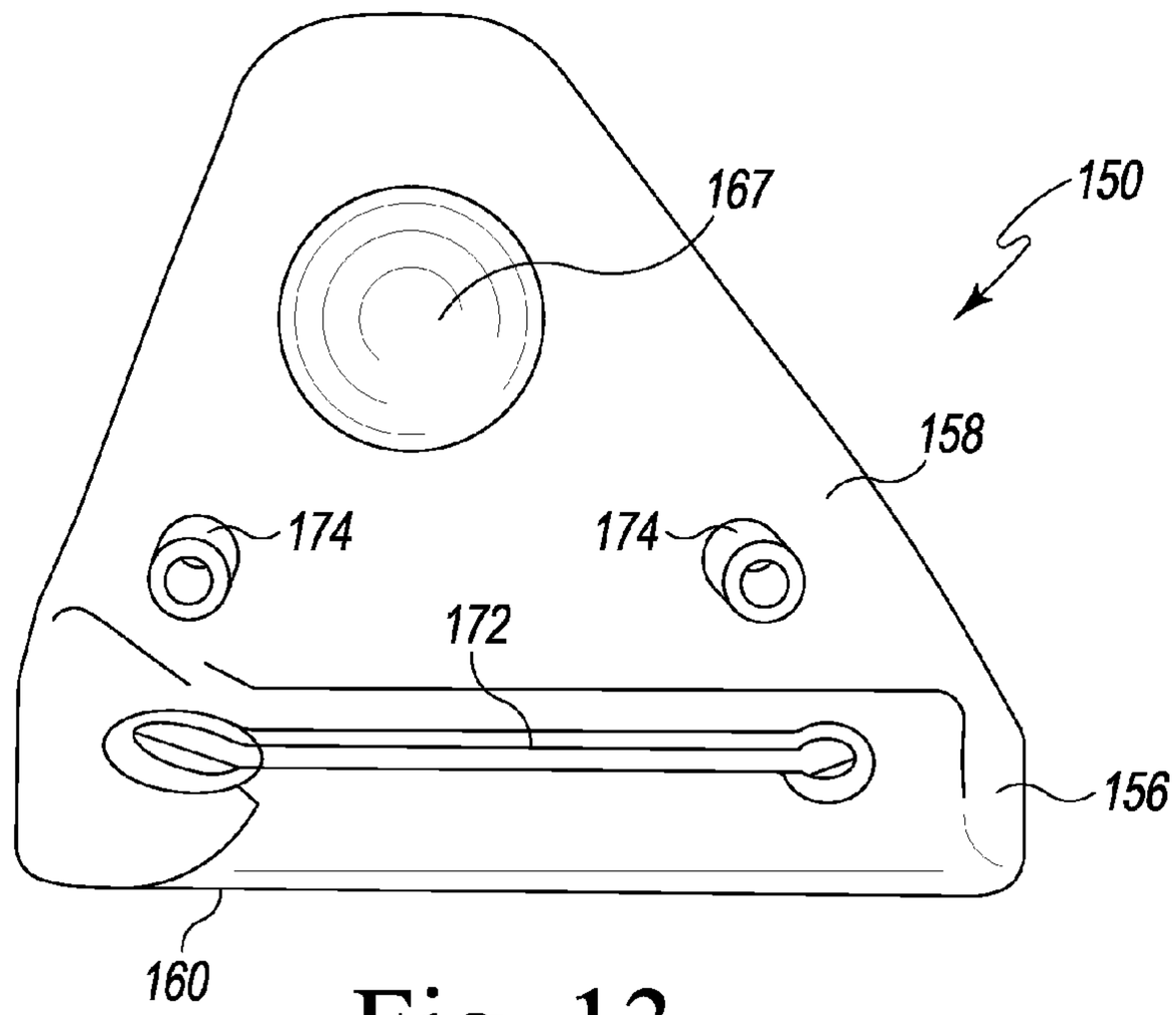
167
150
158
174
174
172
156
160

Fig. 13

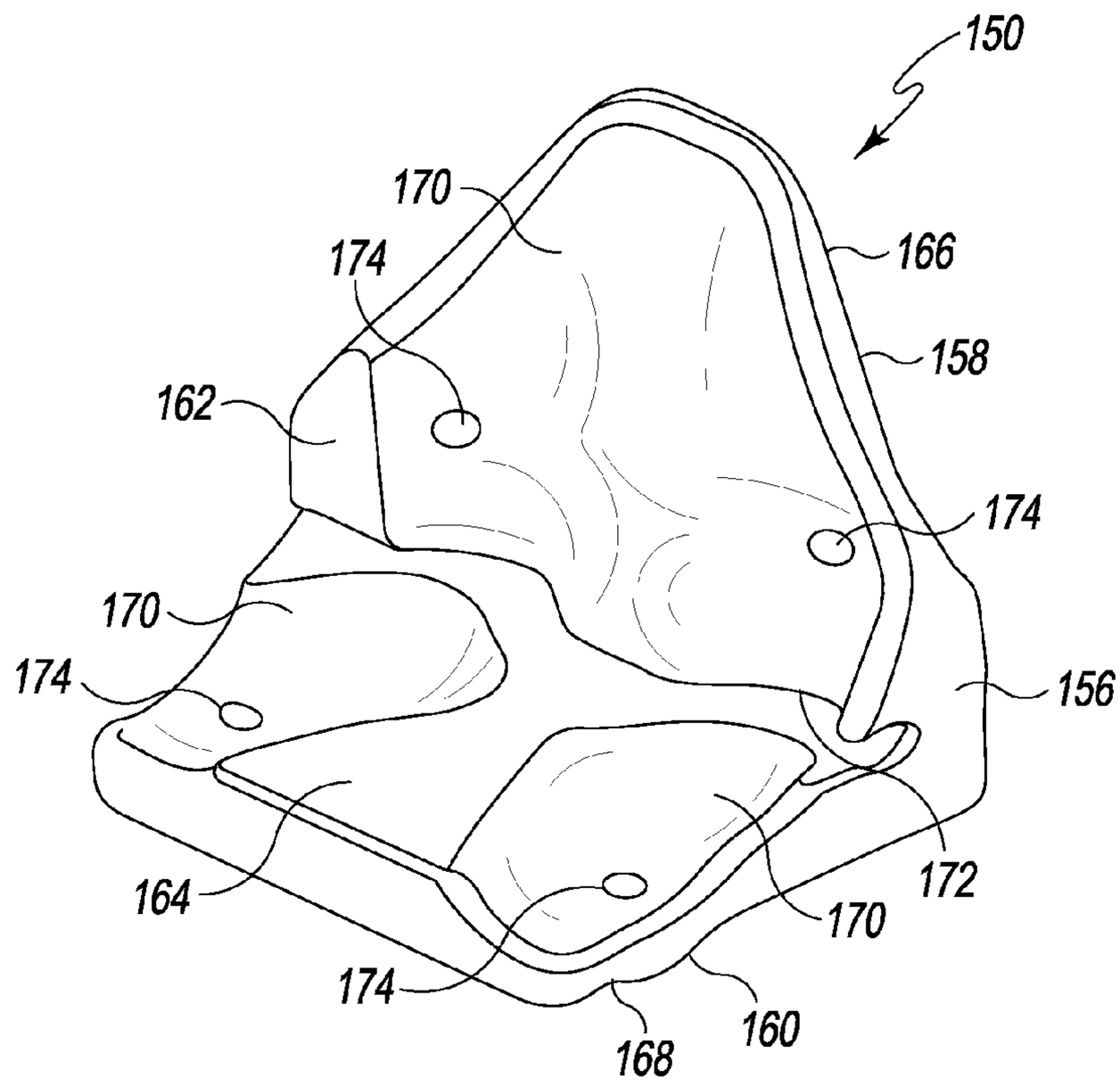
150
170
166
174
158
162
174
170
174
156
164
172
170
174
168
160

Fig. 14

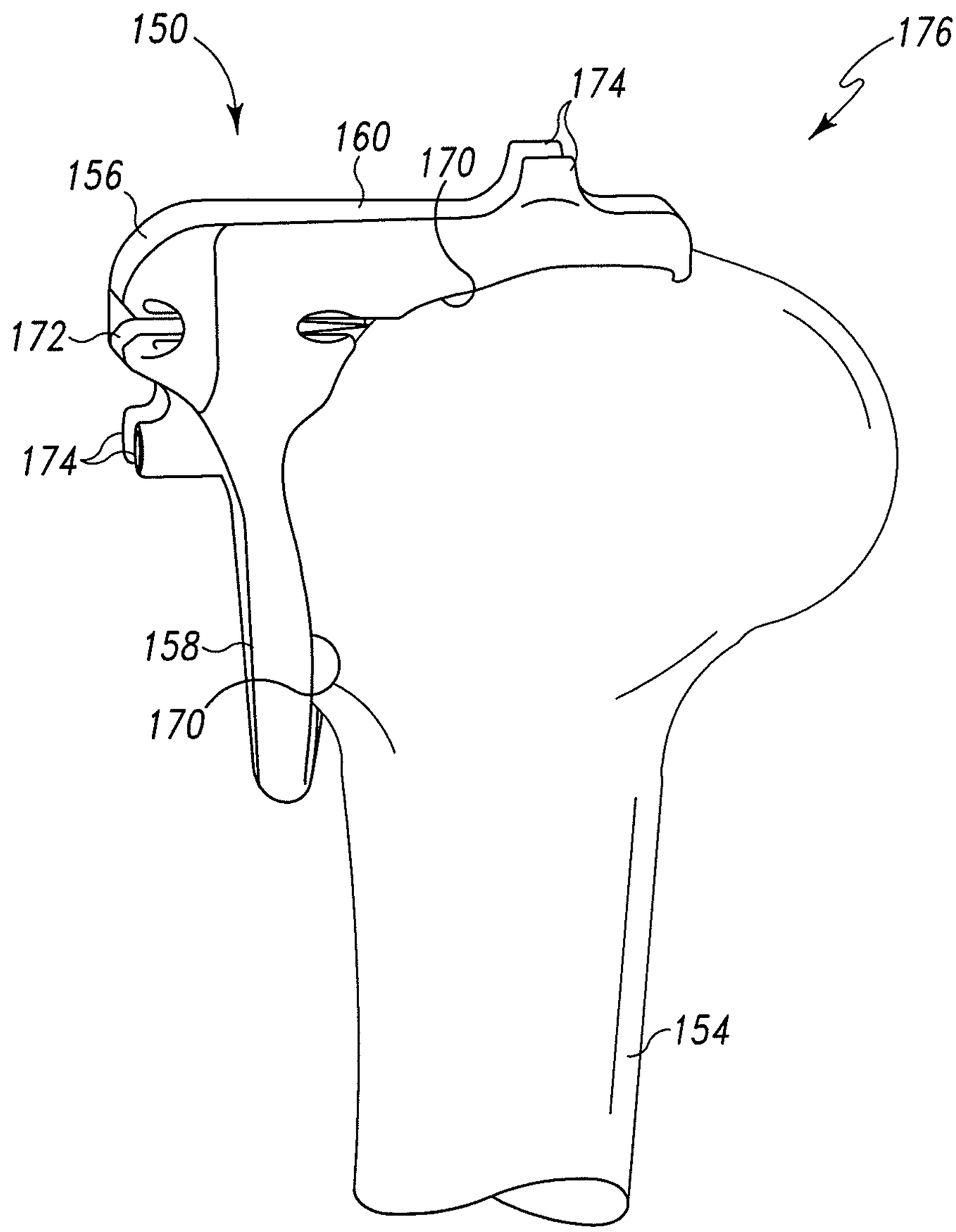

Fig. 15

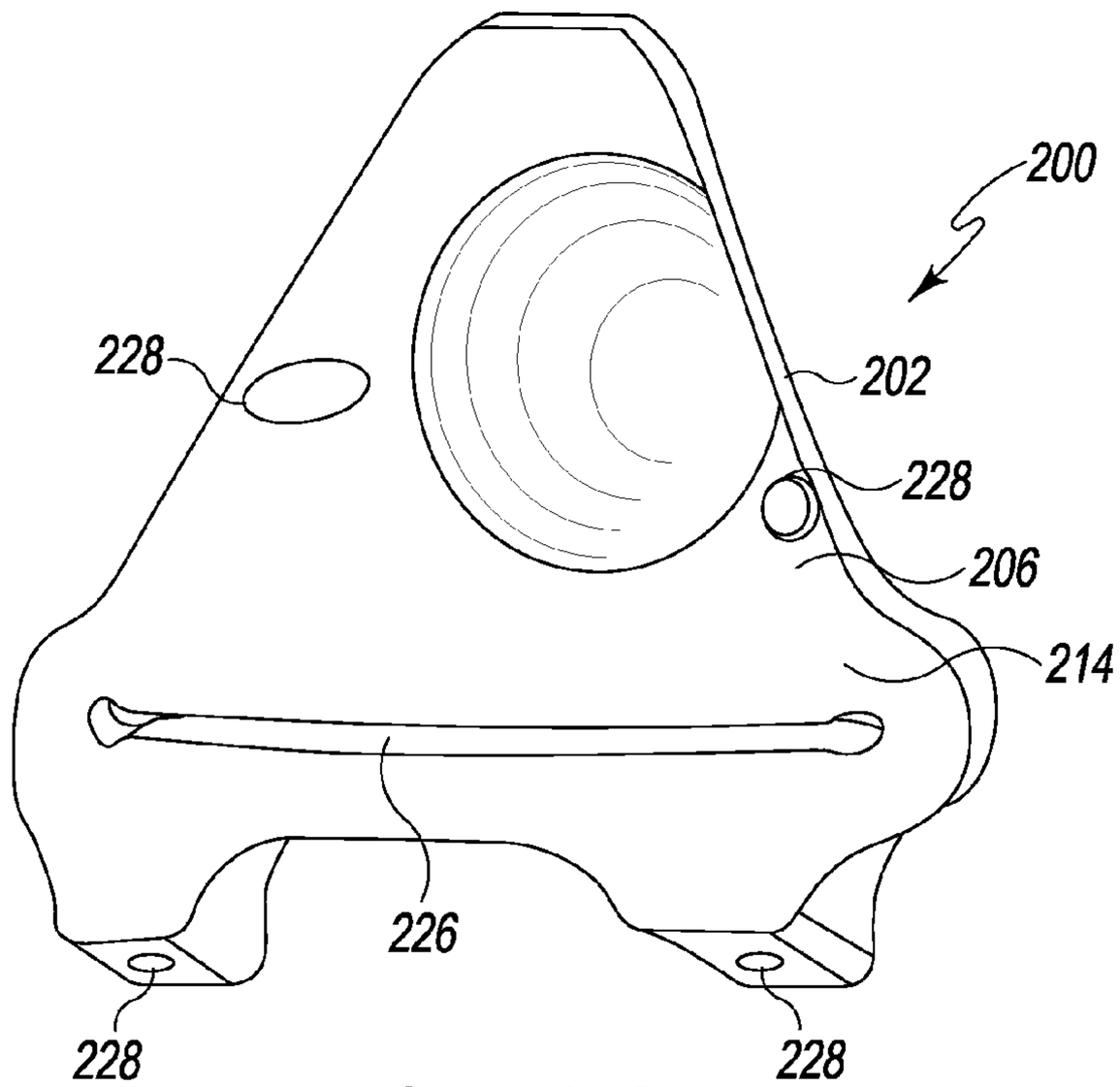
200
228
202
228
206
214
226
228
228

Fig. 16

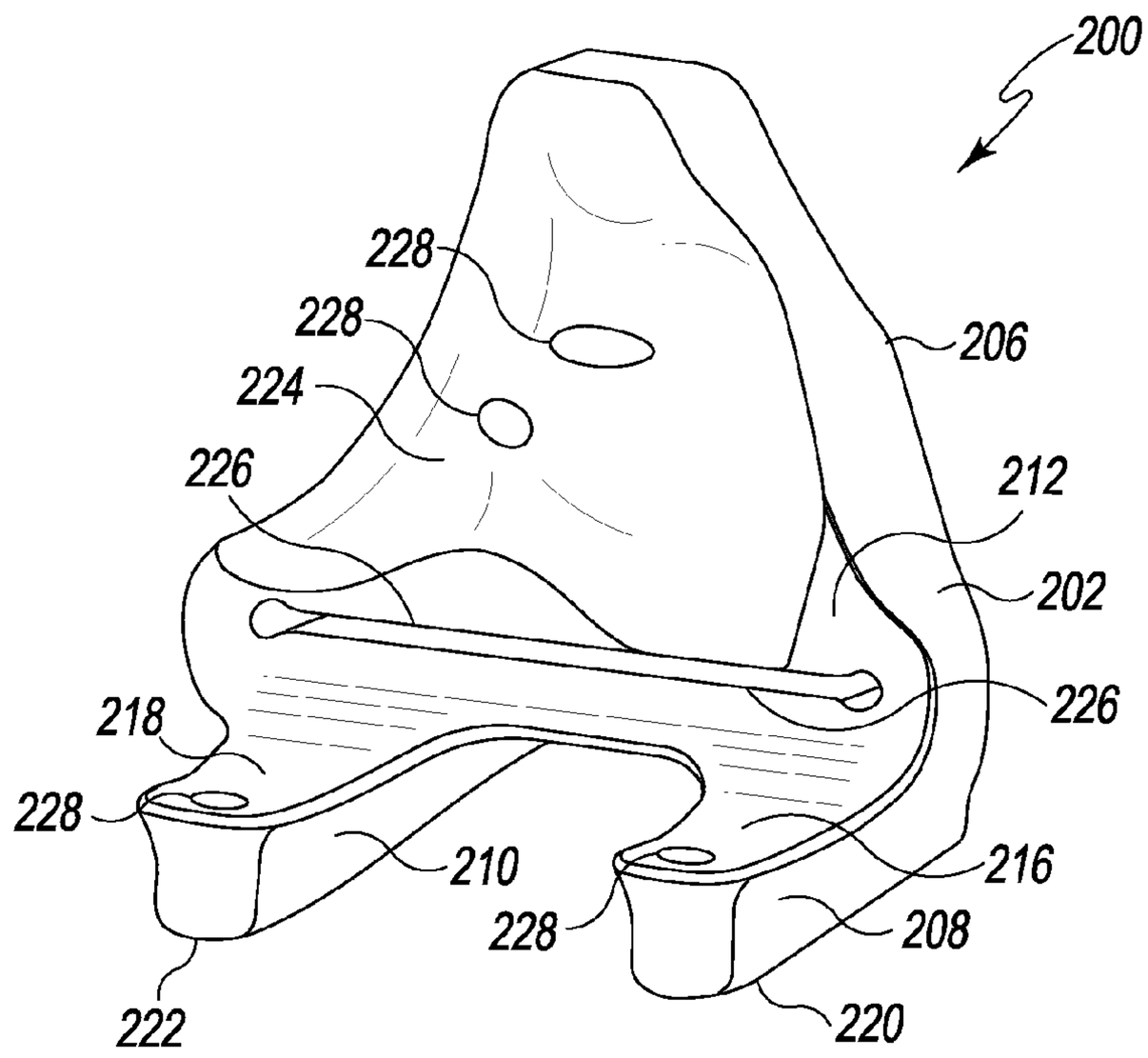
200
228
228
224
226
206
212
202
226
218
228
210
216
228
208
222
220

Fig. 17

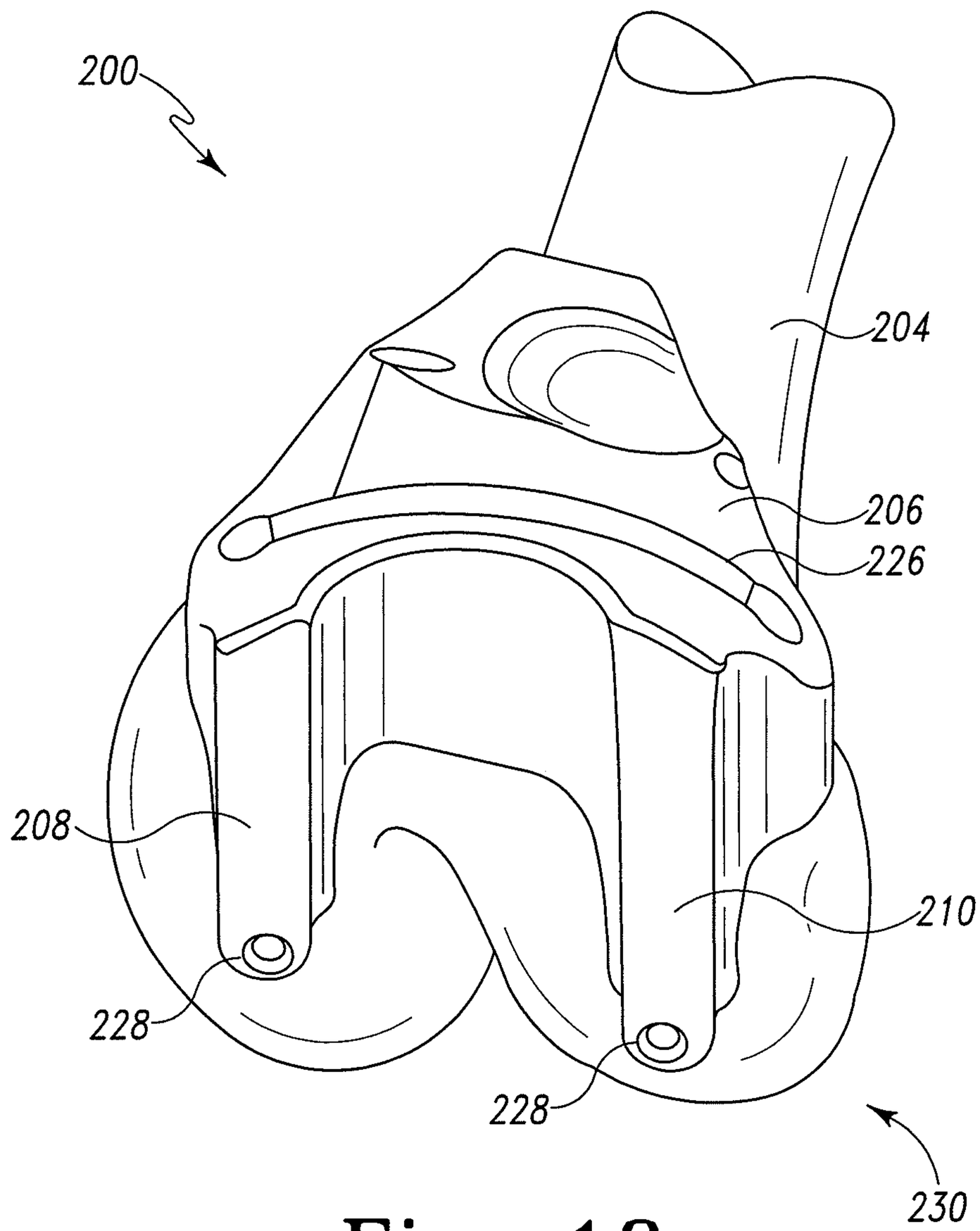

Fig. 18

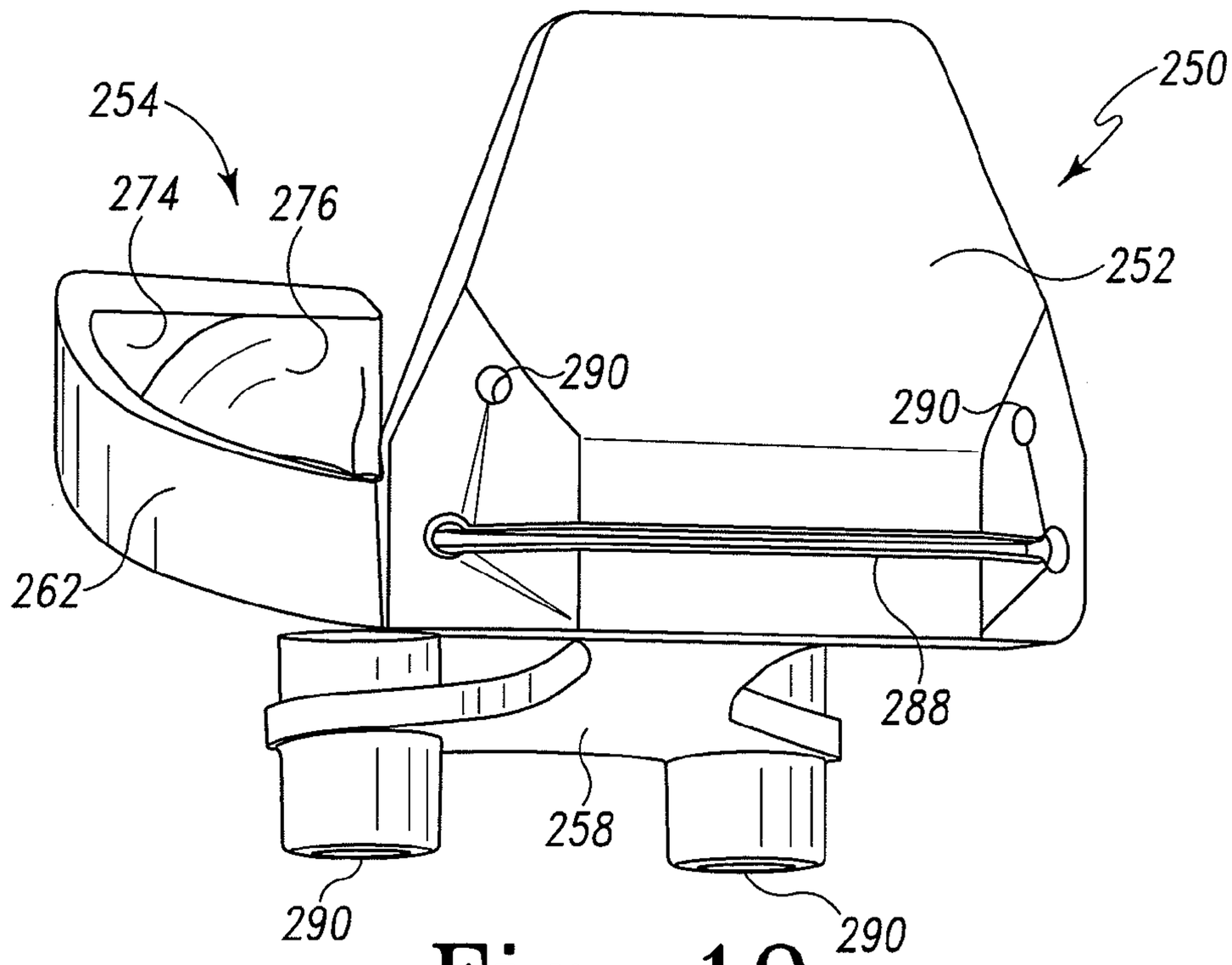
254
274
276
250
252
290
290
262
288
258
290
290

Fig. 19

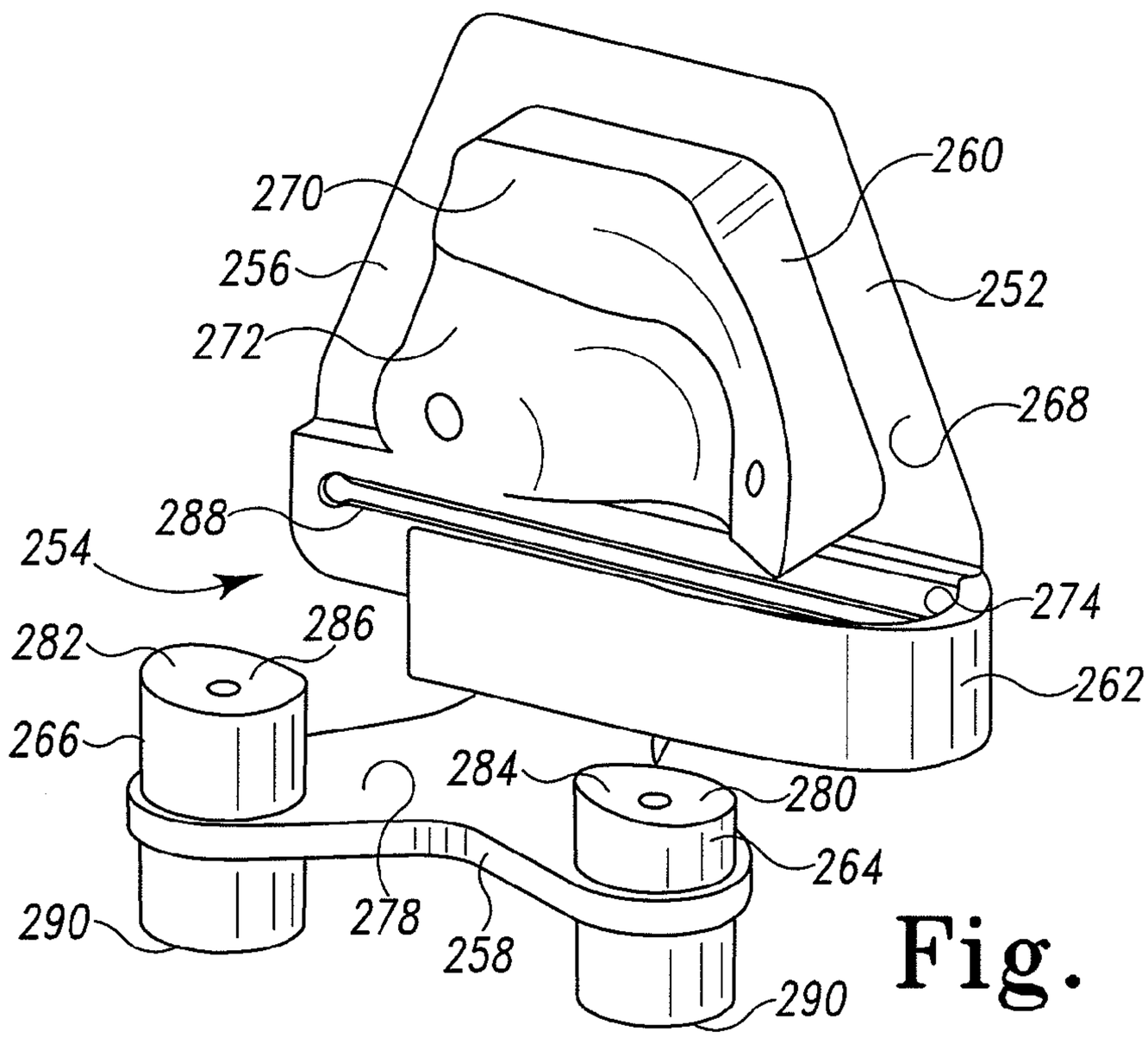
270
260
256
252
272
268
288
254
274
282
286
262
266
284
280
264
290
278
258
290

Fig. 20

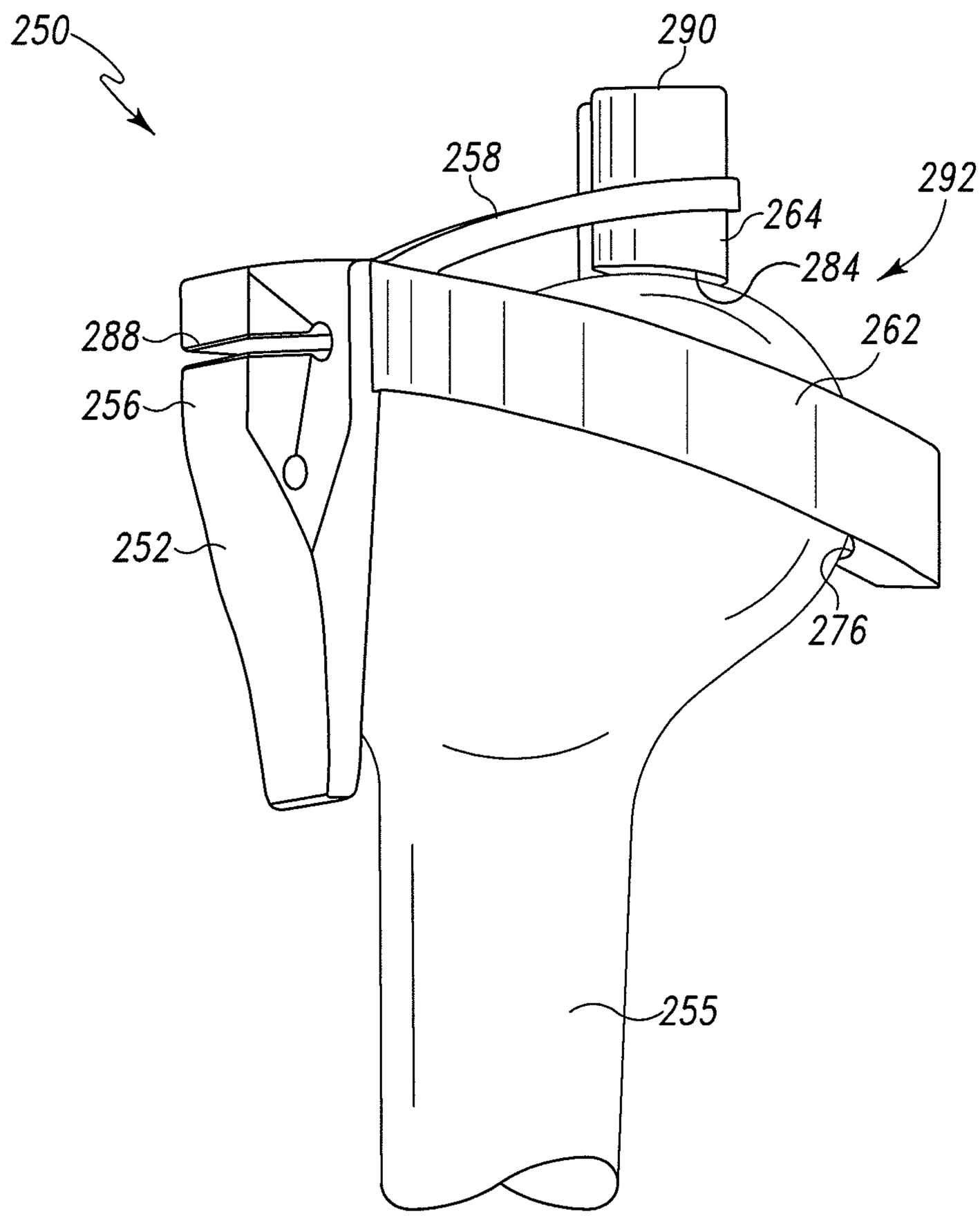

Fig. 21

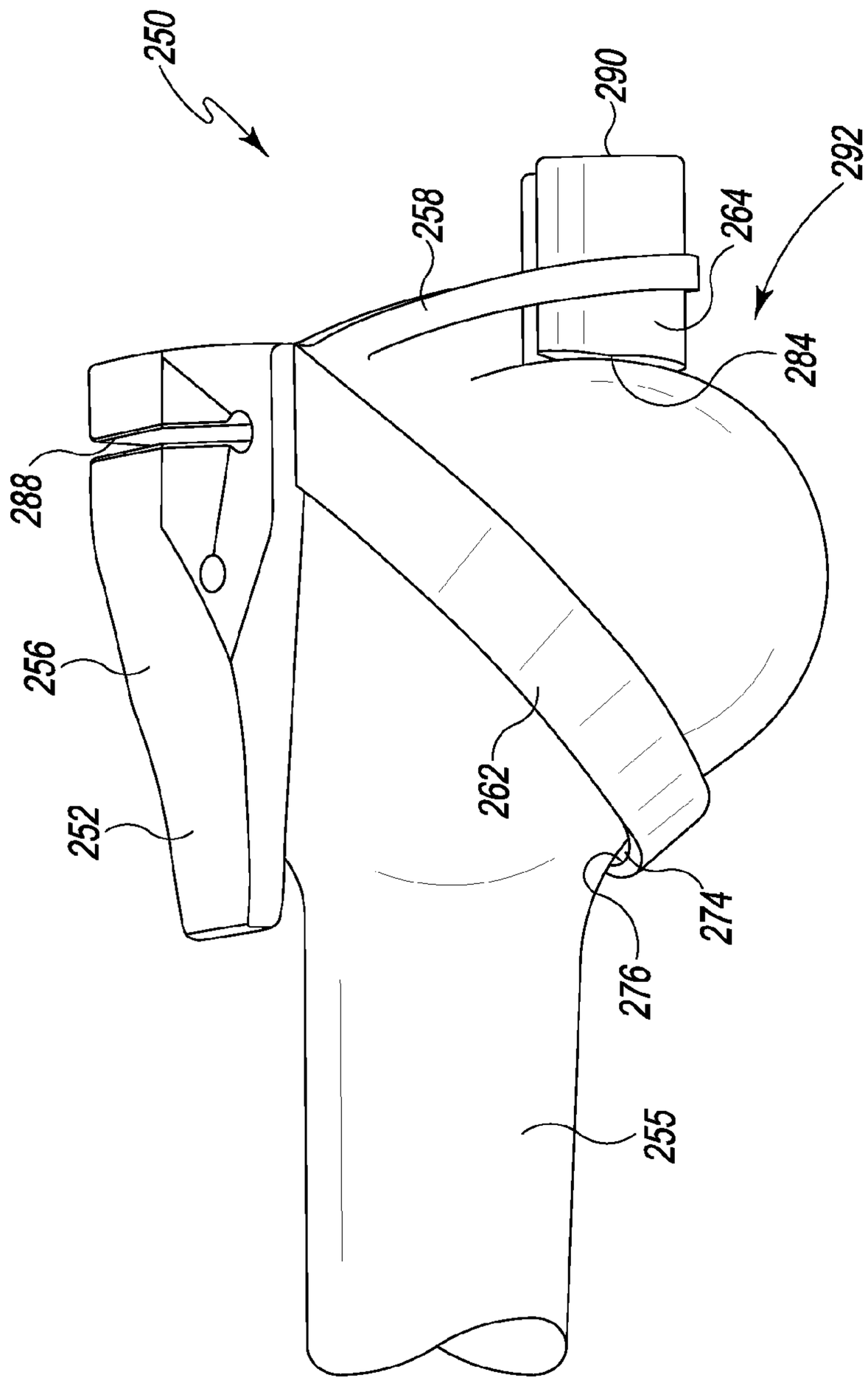

Fig. 22

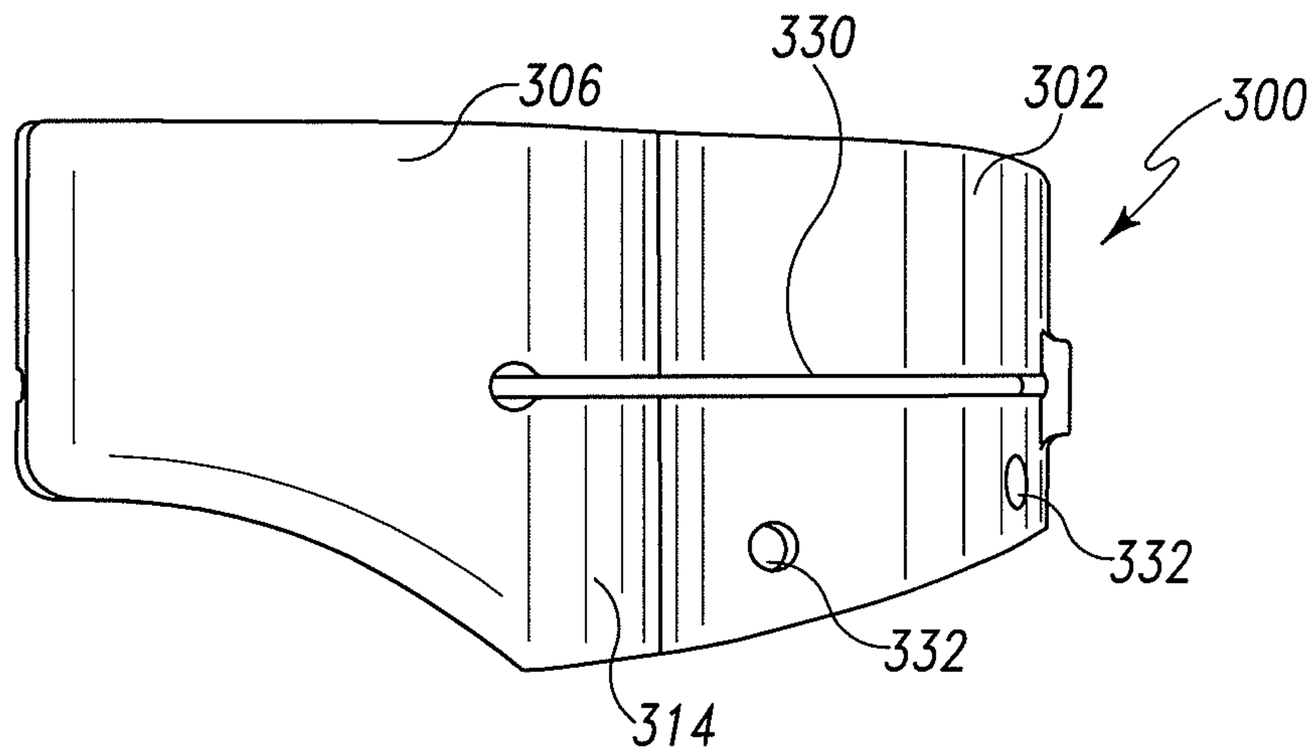
330
306
302
300
332
332
314

Fig. 23

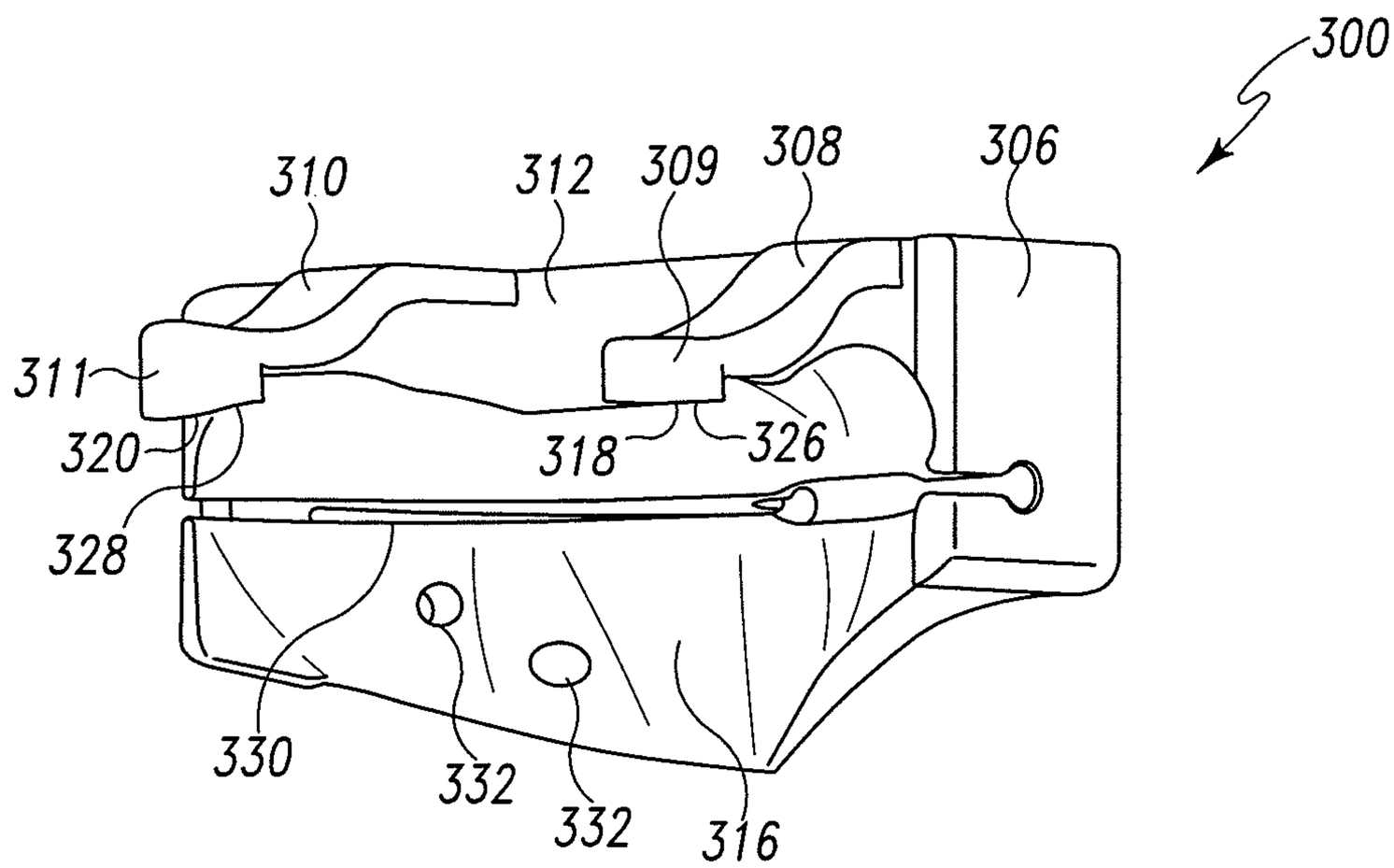
300
310
312
309
308
306
311
320
318
326
328
330
332
332
316

Fig. 24

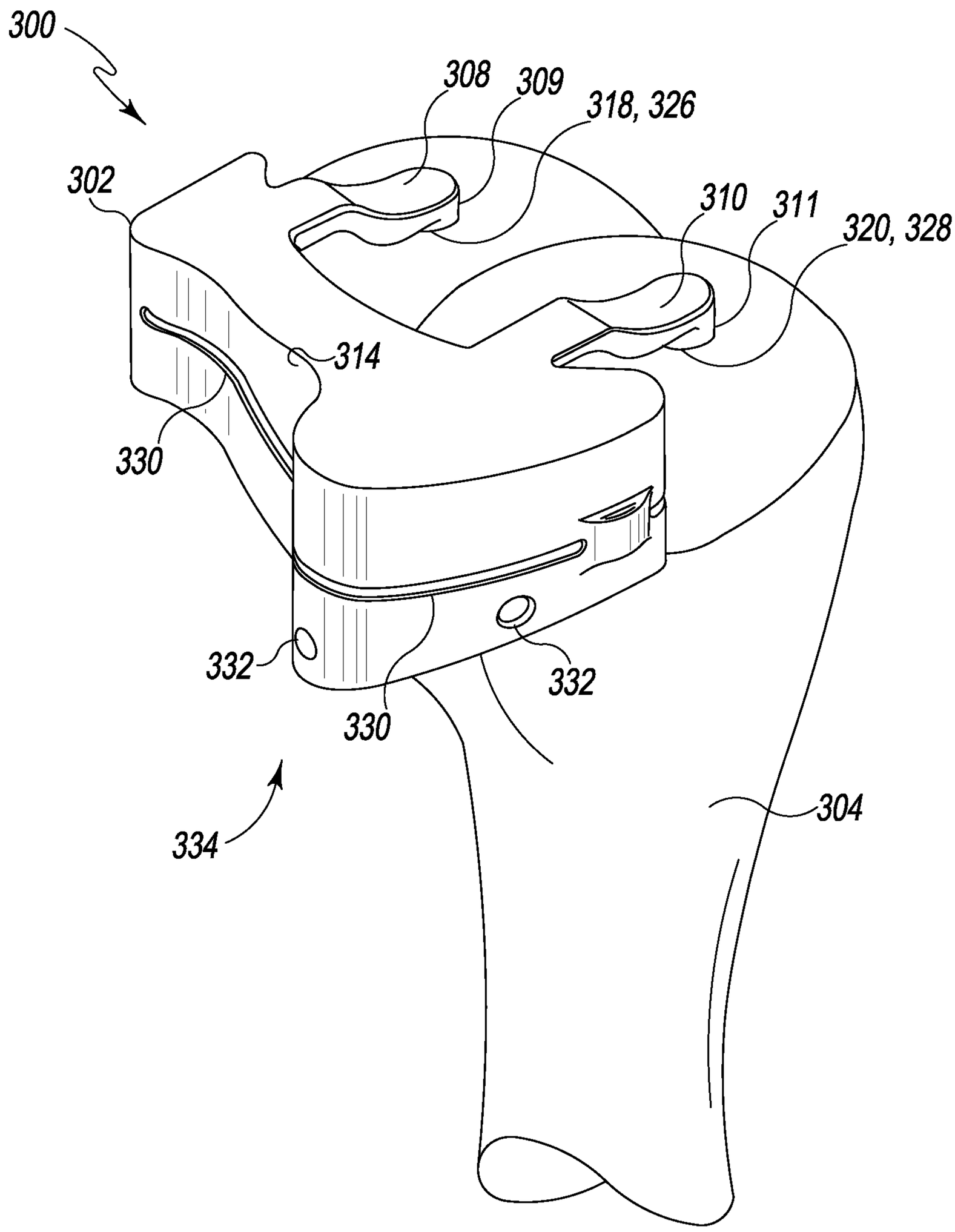
300
308
309
318, 326
302
310
311
320, 328
314
330
332
332
330
334
304

Fig. 25

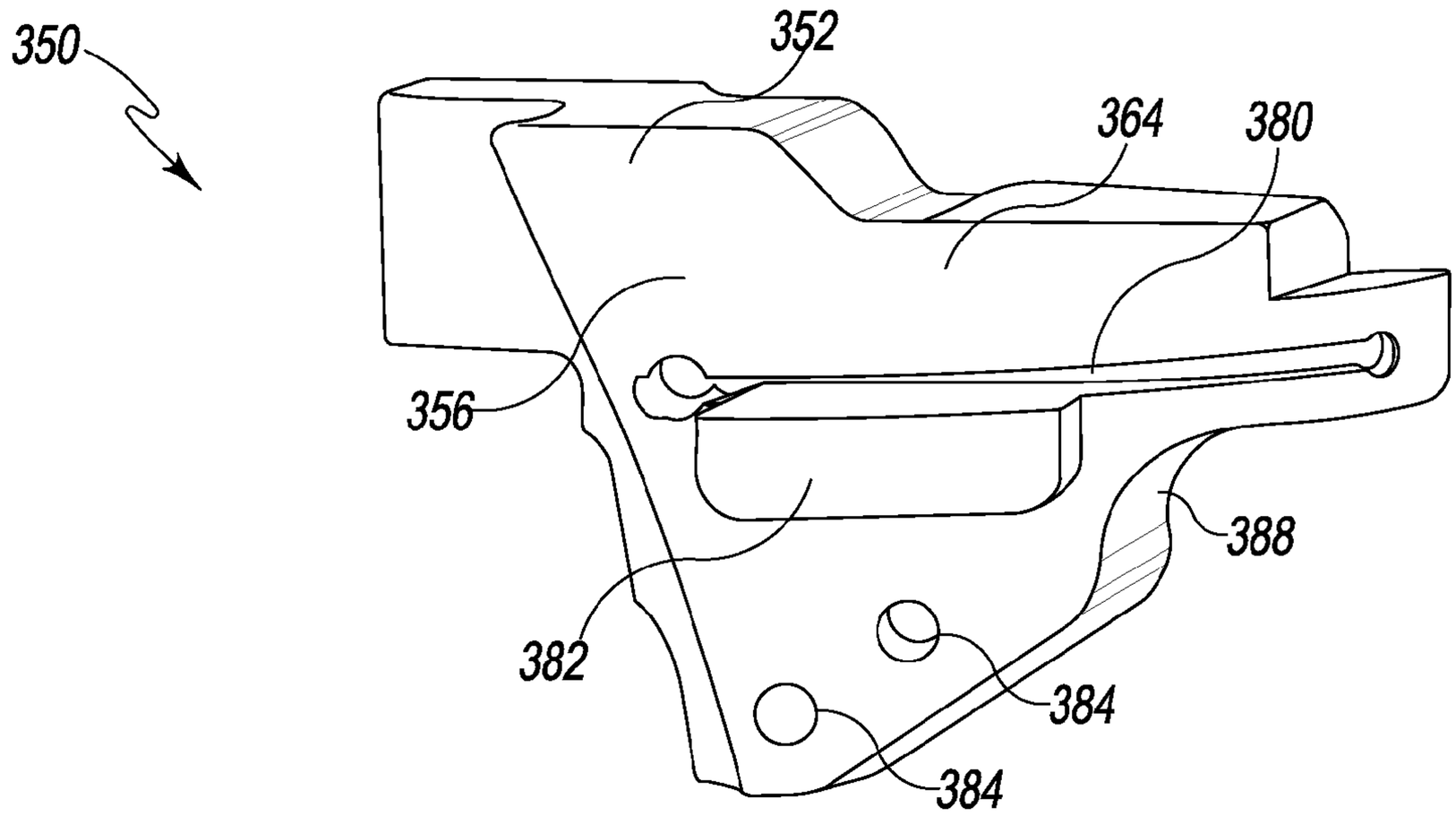
350
352
364
380
356
388
382
384
384

Fig. 26

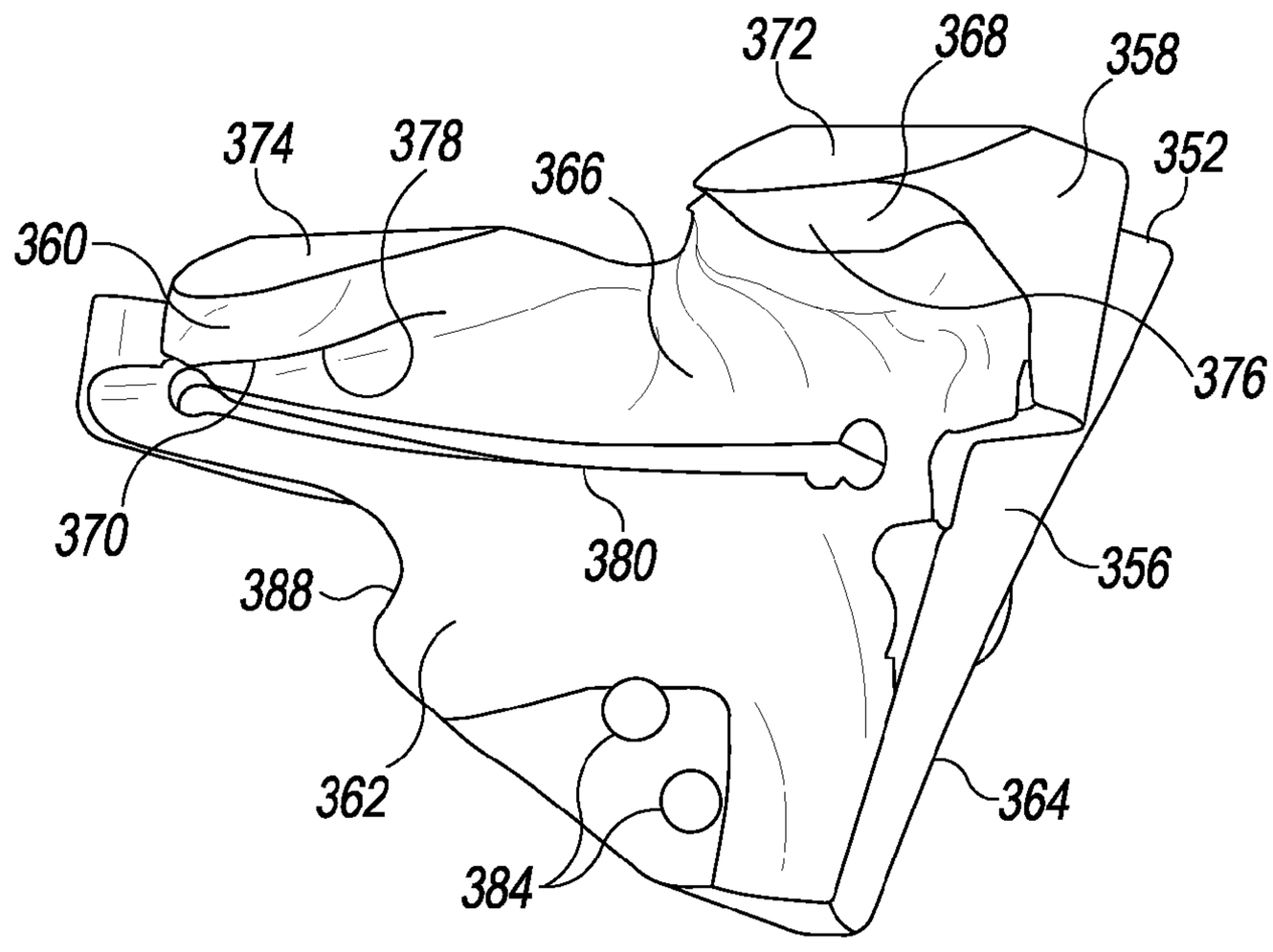
372
368
358
374
378
366
352
360
376
370
380
356
388
362
364
384

Fig. 27

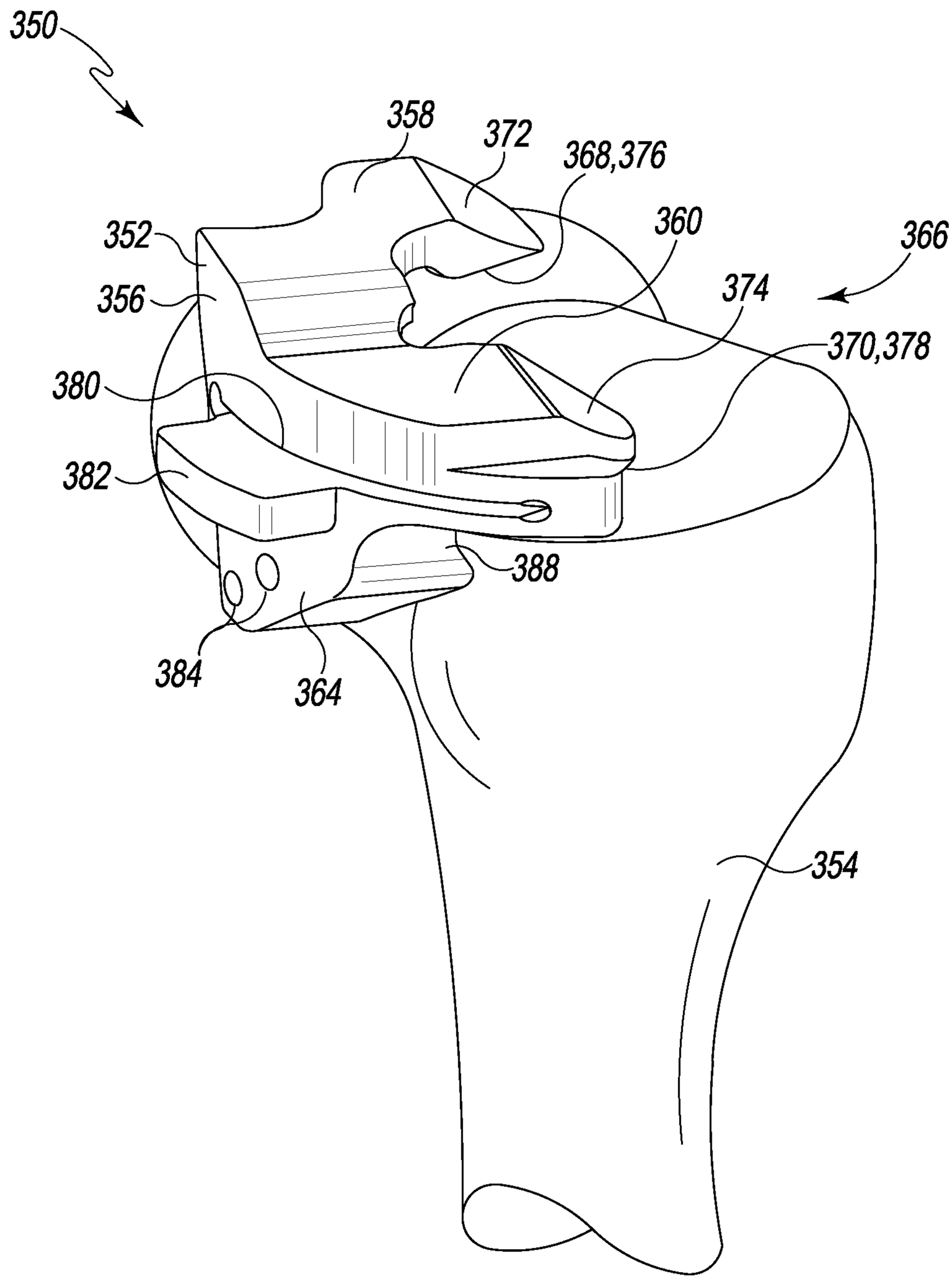
350
358
372
368,376
360
366
352
356
374
370,378
380
382
388
384
364
354

Fig. 28

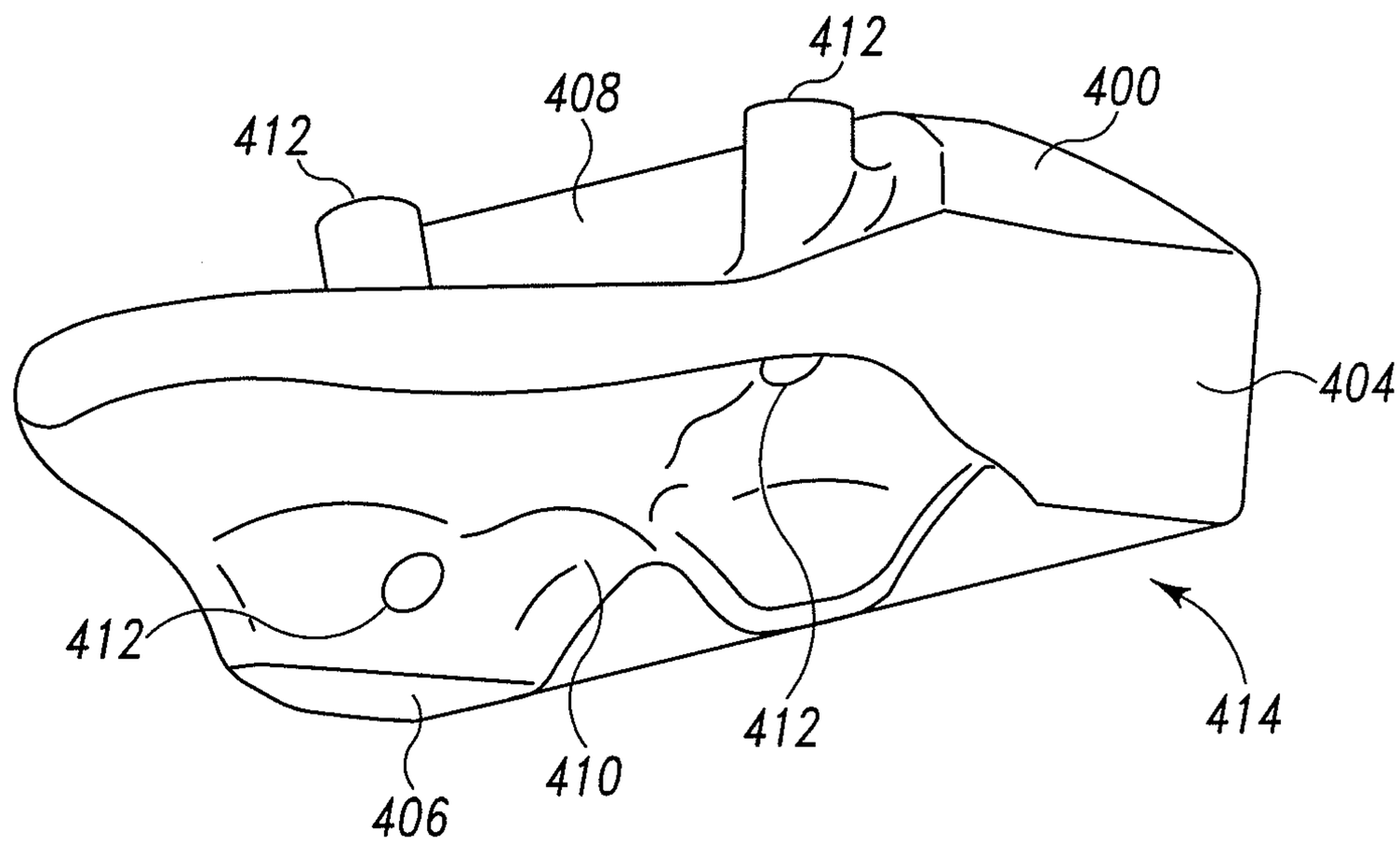

Fig. 29

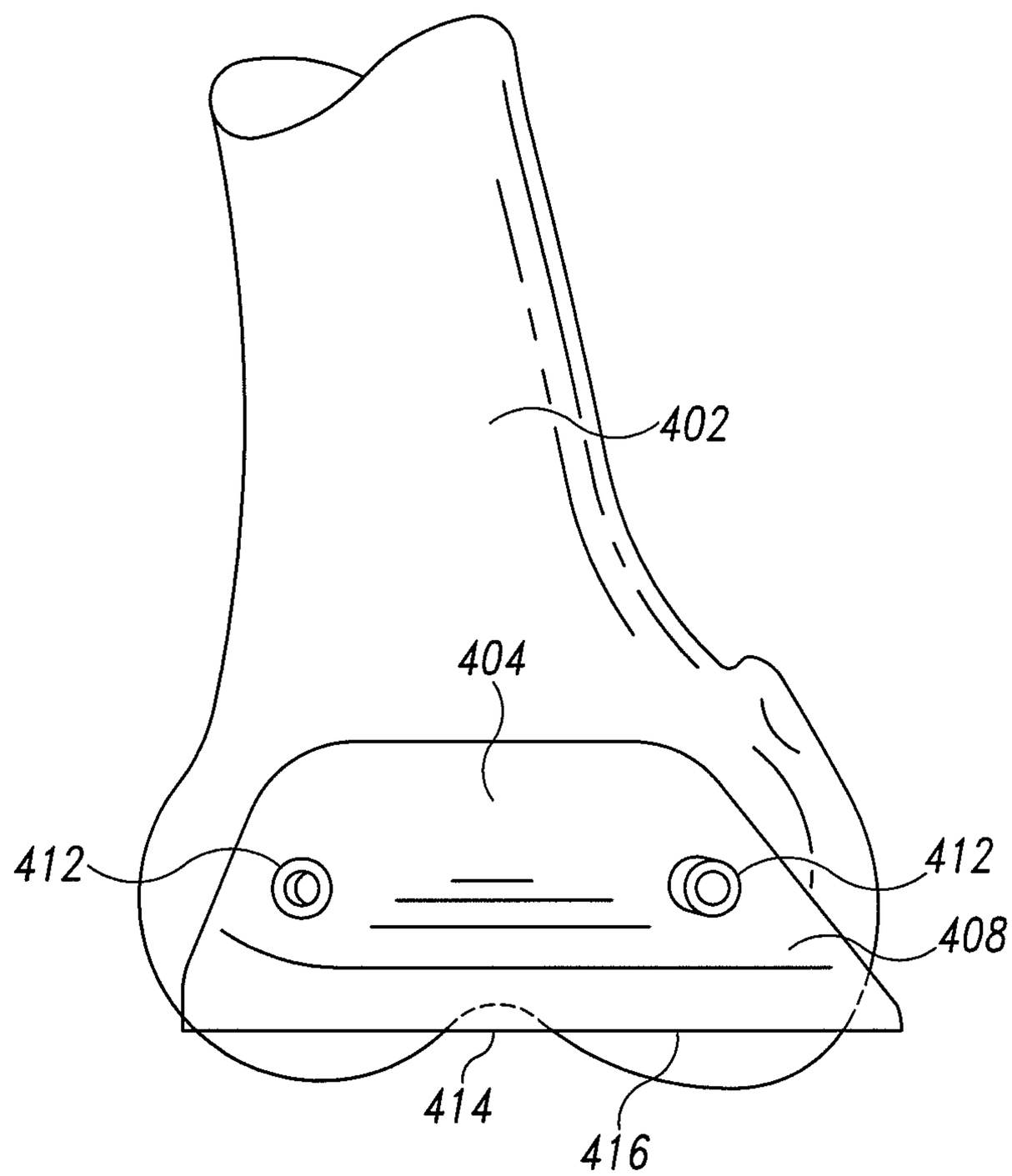

Fig. 30

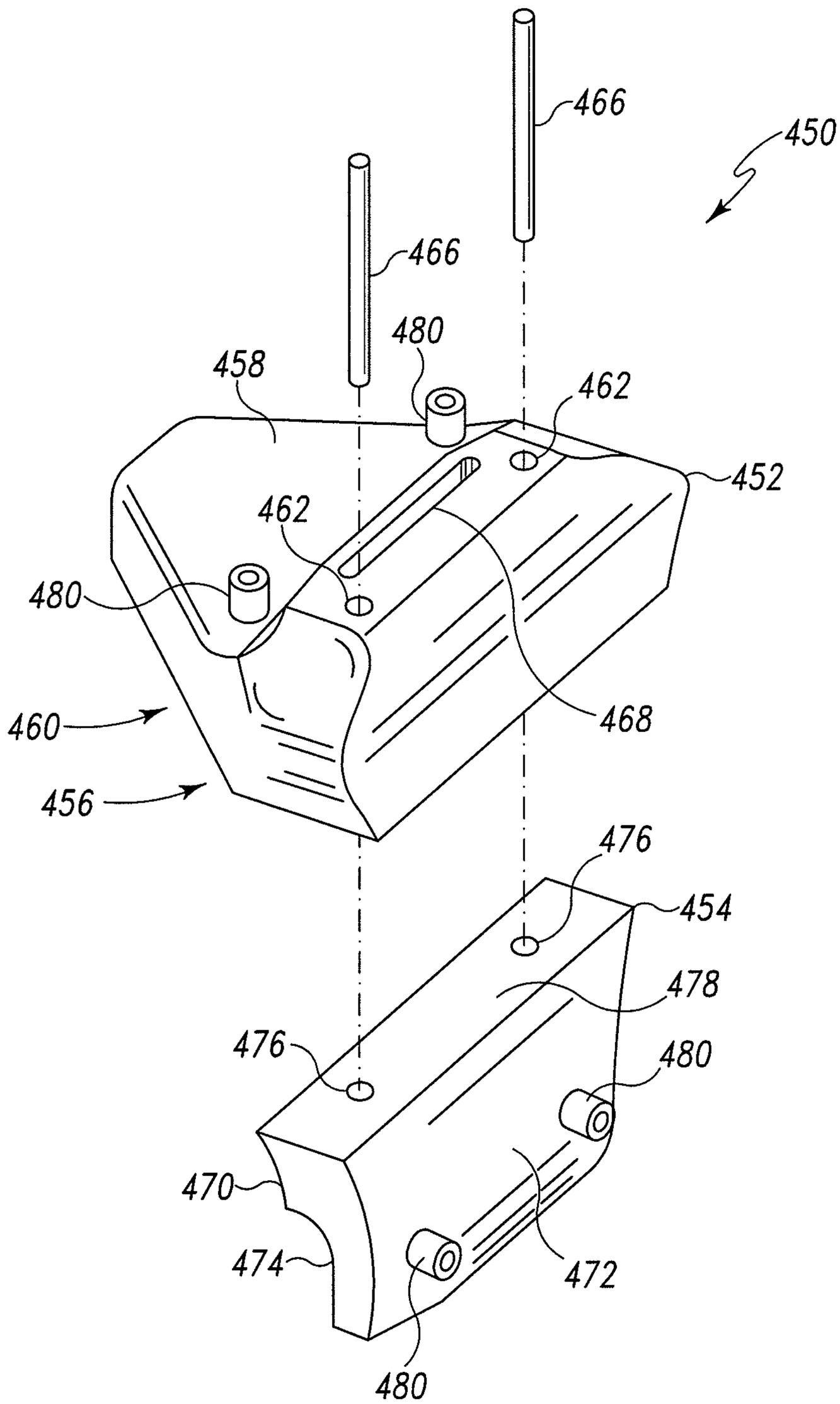
466
450
466
480
458
462
452
462
480
468
460
456
476
454
478
476
480
470
474
472
480

Fig. 31

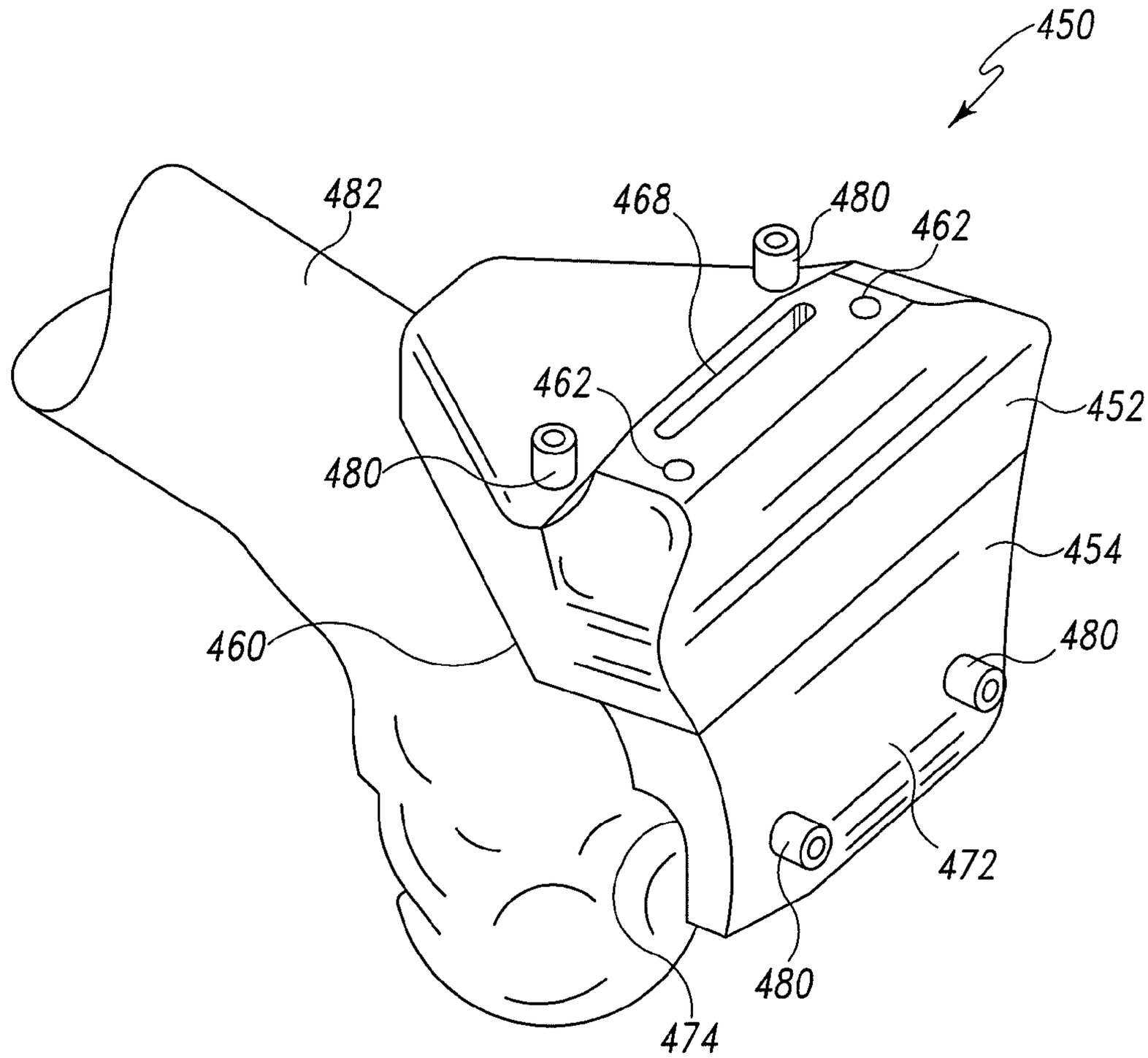

Fig. 32

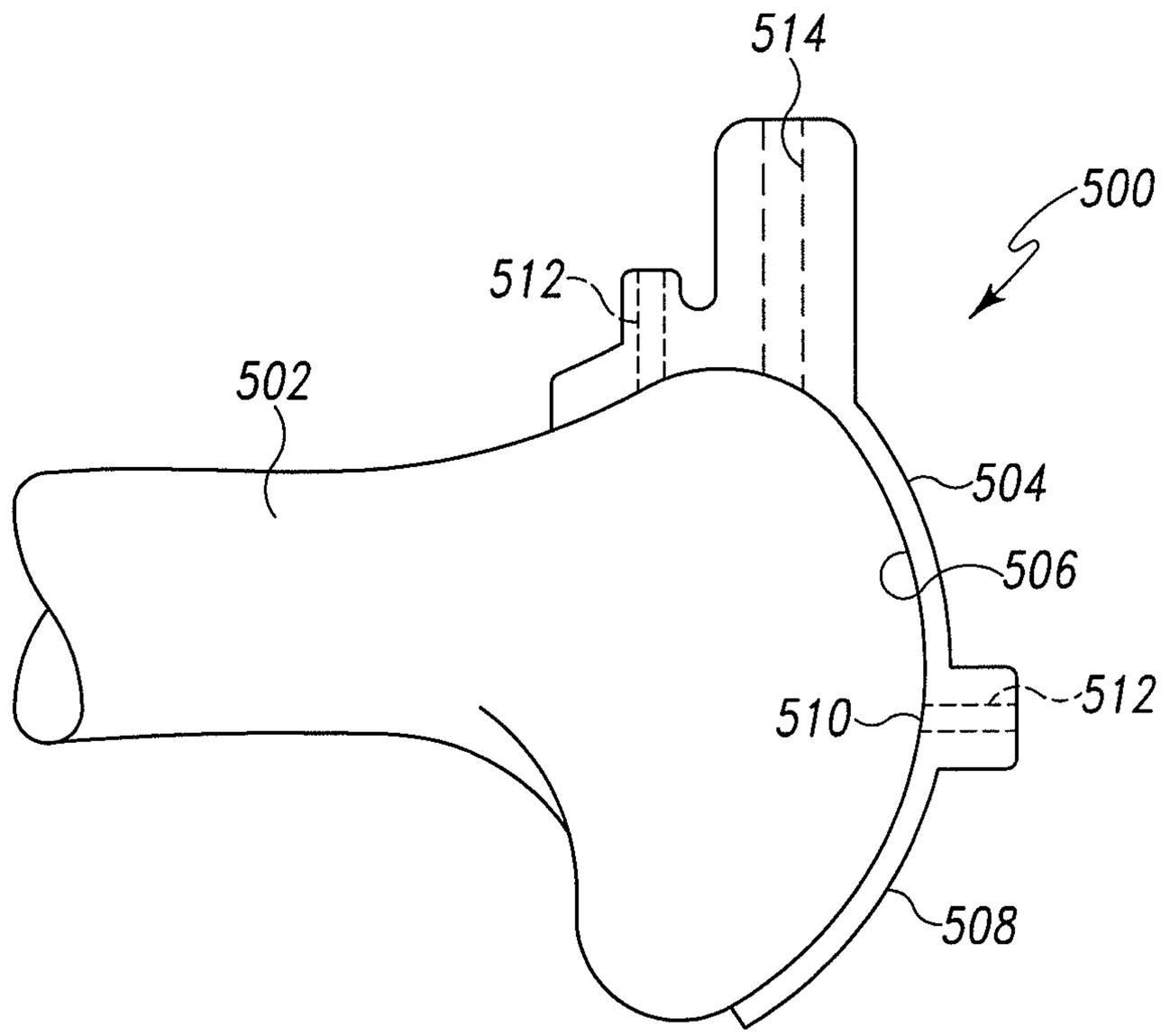

Fig. 33

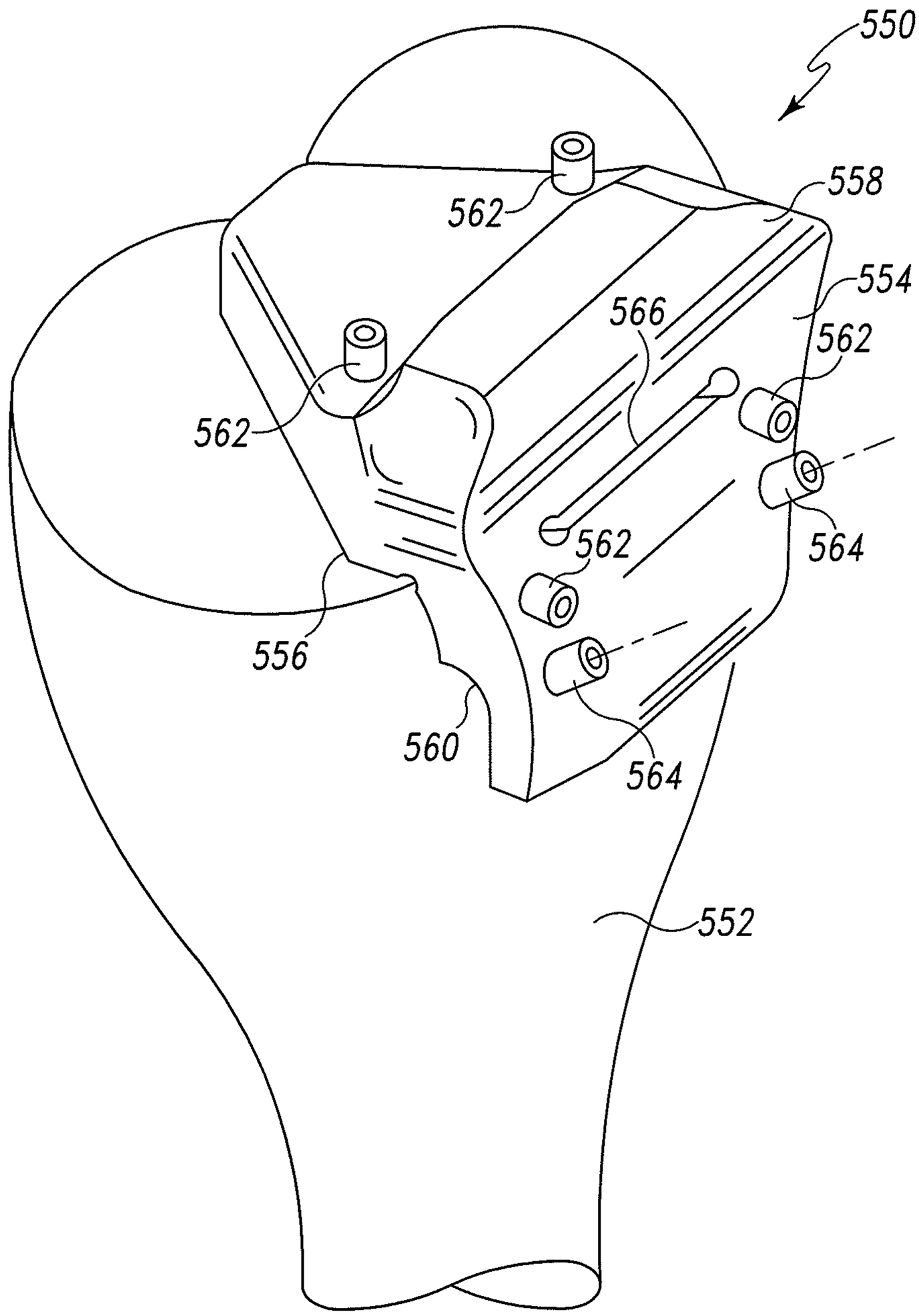

Fig. 34

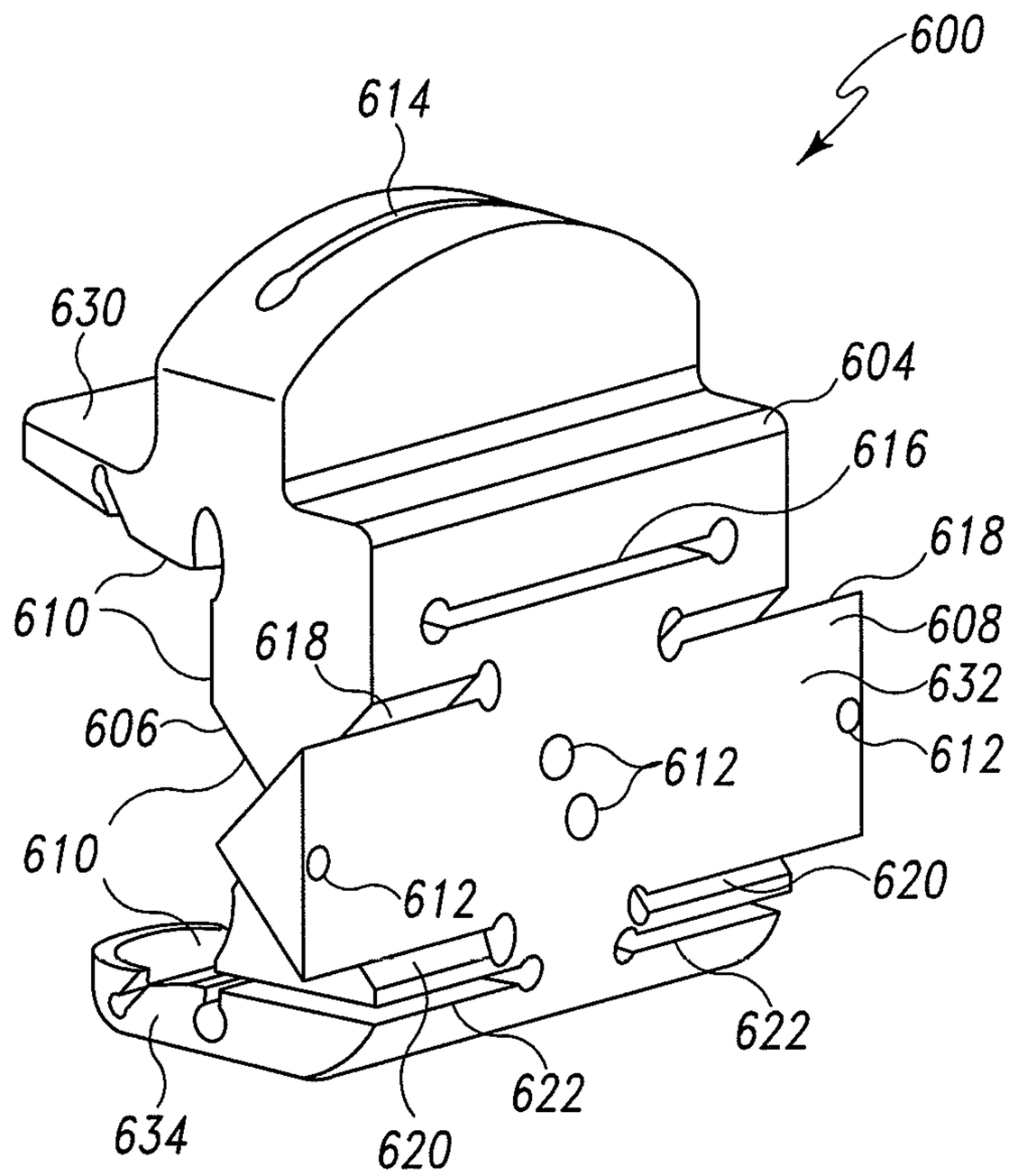
600
614
630
604
616
618
610
618
608
632
606
612
612
610
612
620
622
634
620
622

Fig. 35

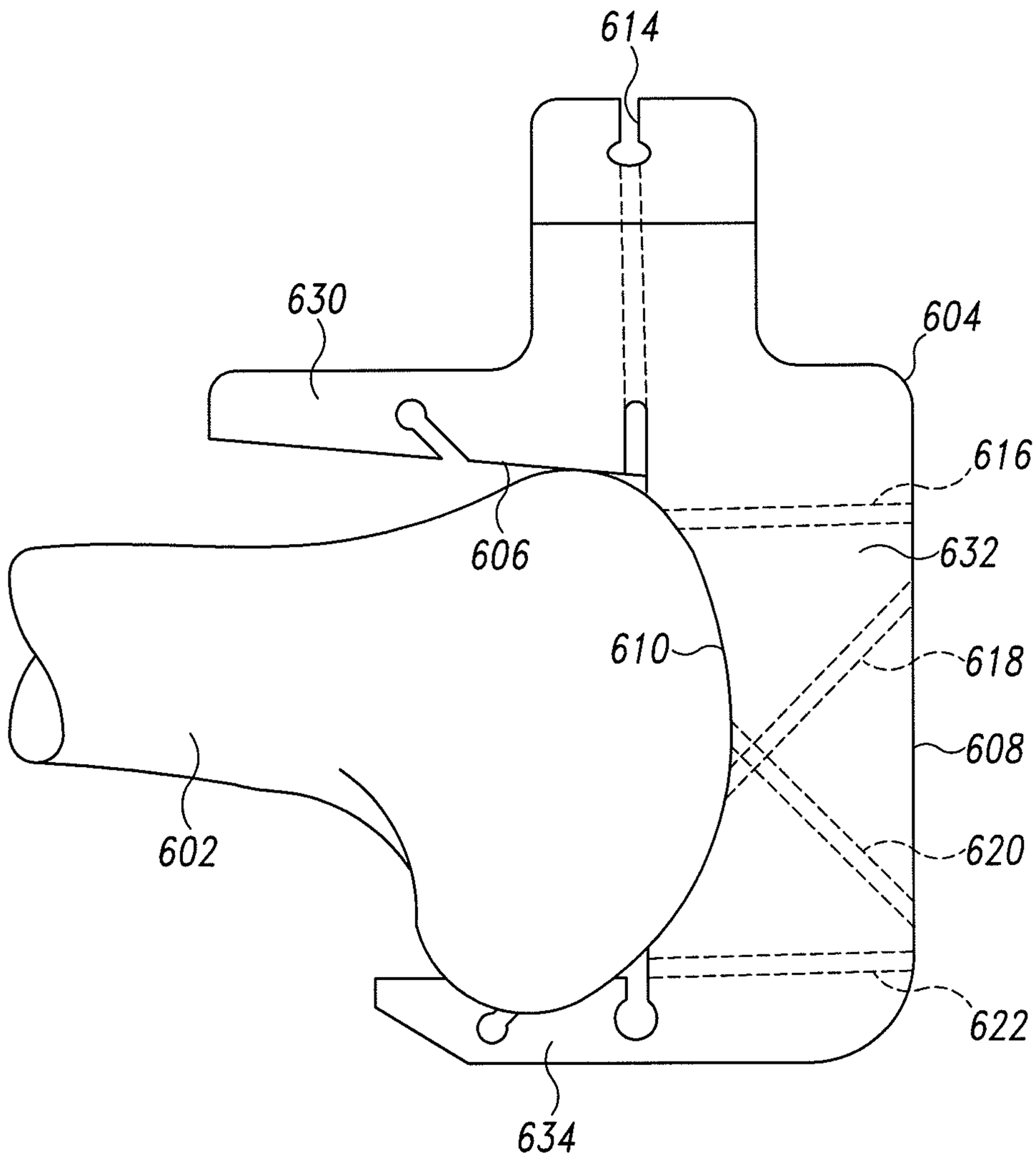

Fig. 36

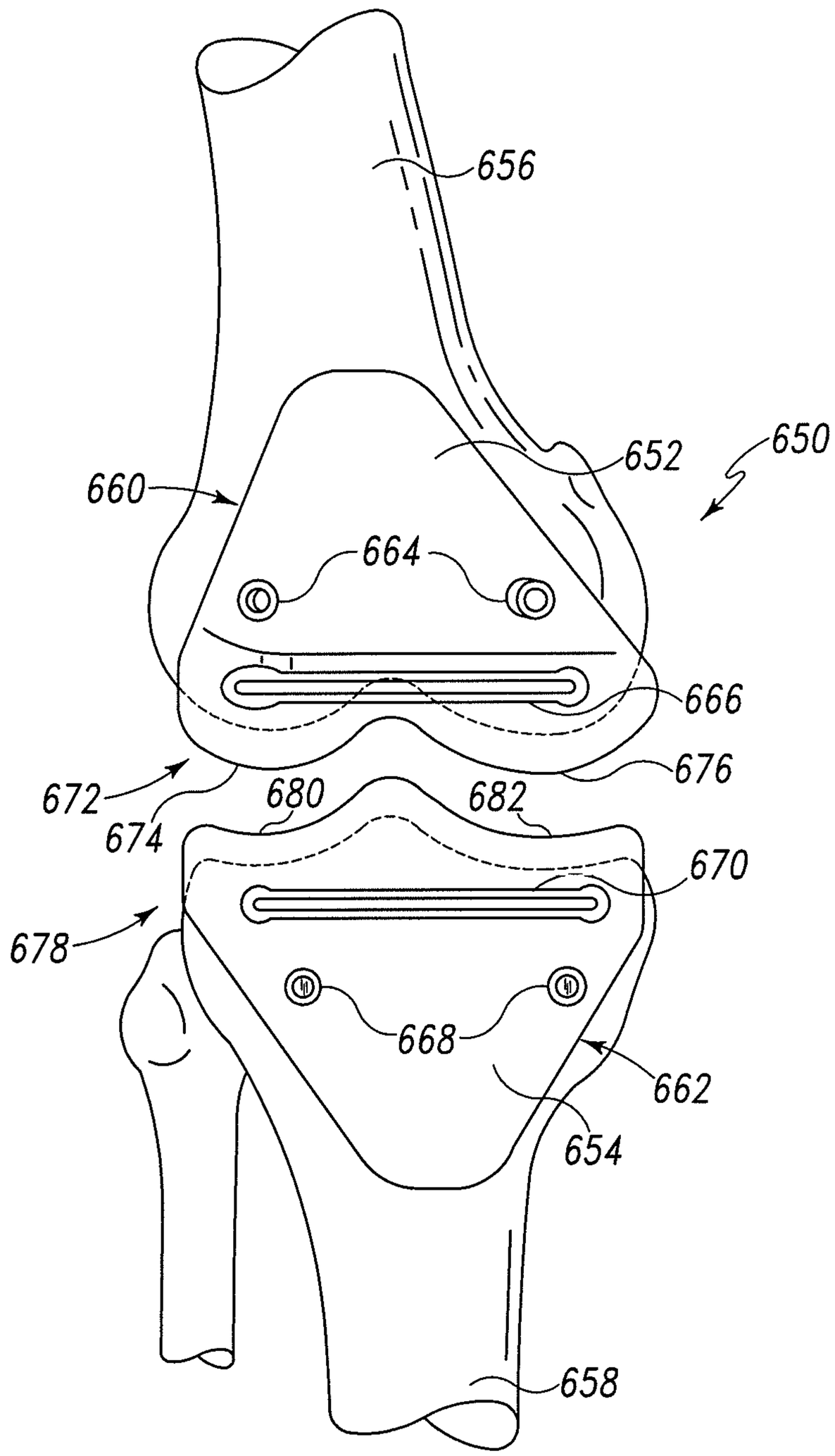
656
652
650
660
664
666
676
672
674
680
682
670
678
668
662
654
658

Fig. 37

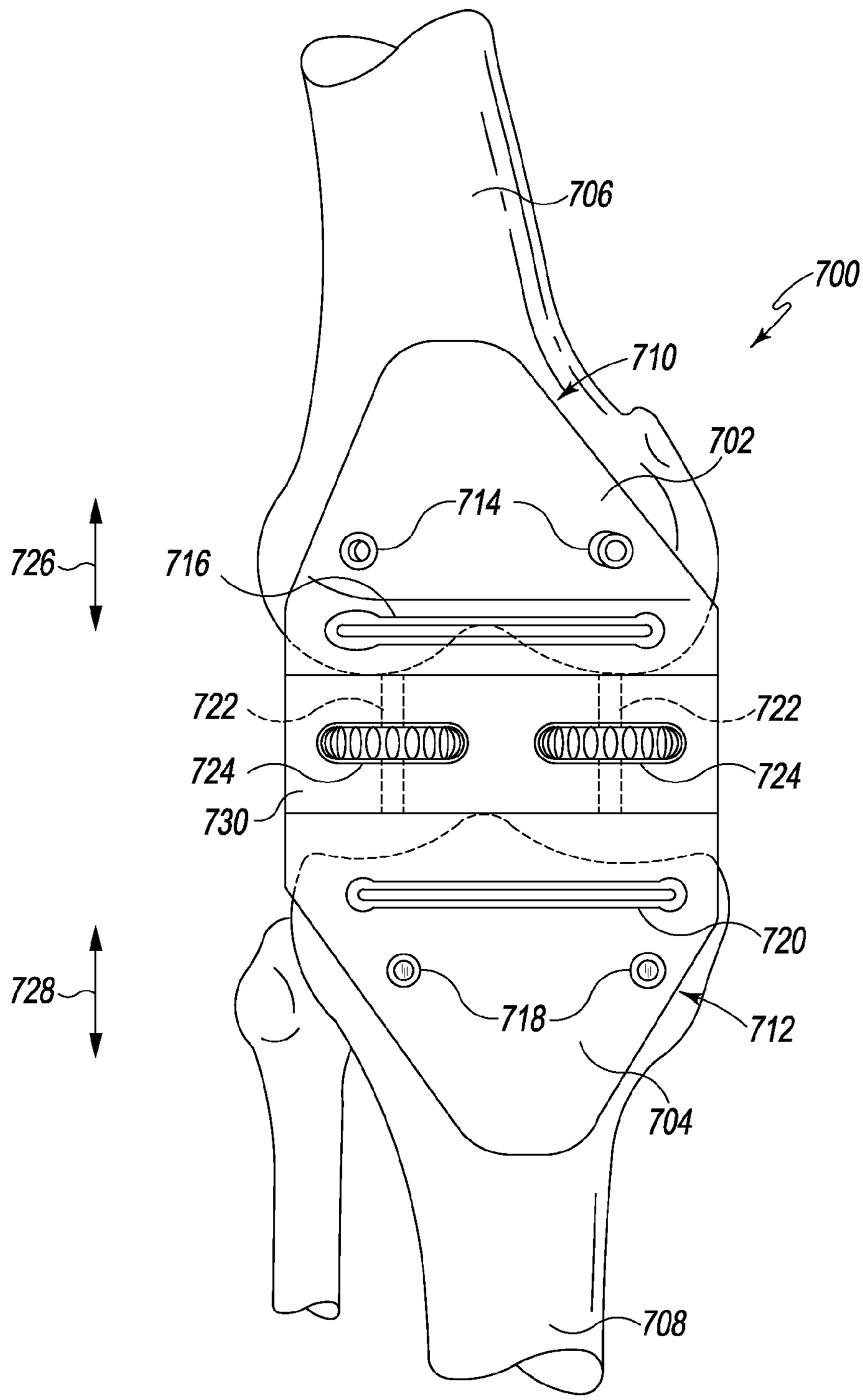
706
700
710
702
714
726
716
722
722
724
724
730
720
728
718
712
704
708

Fig. 38

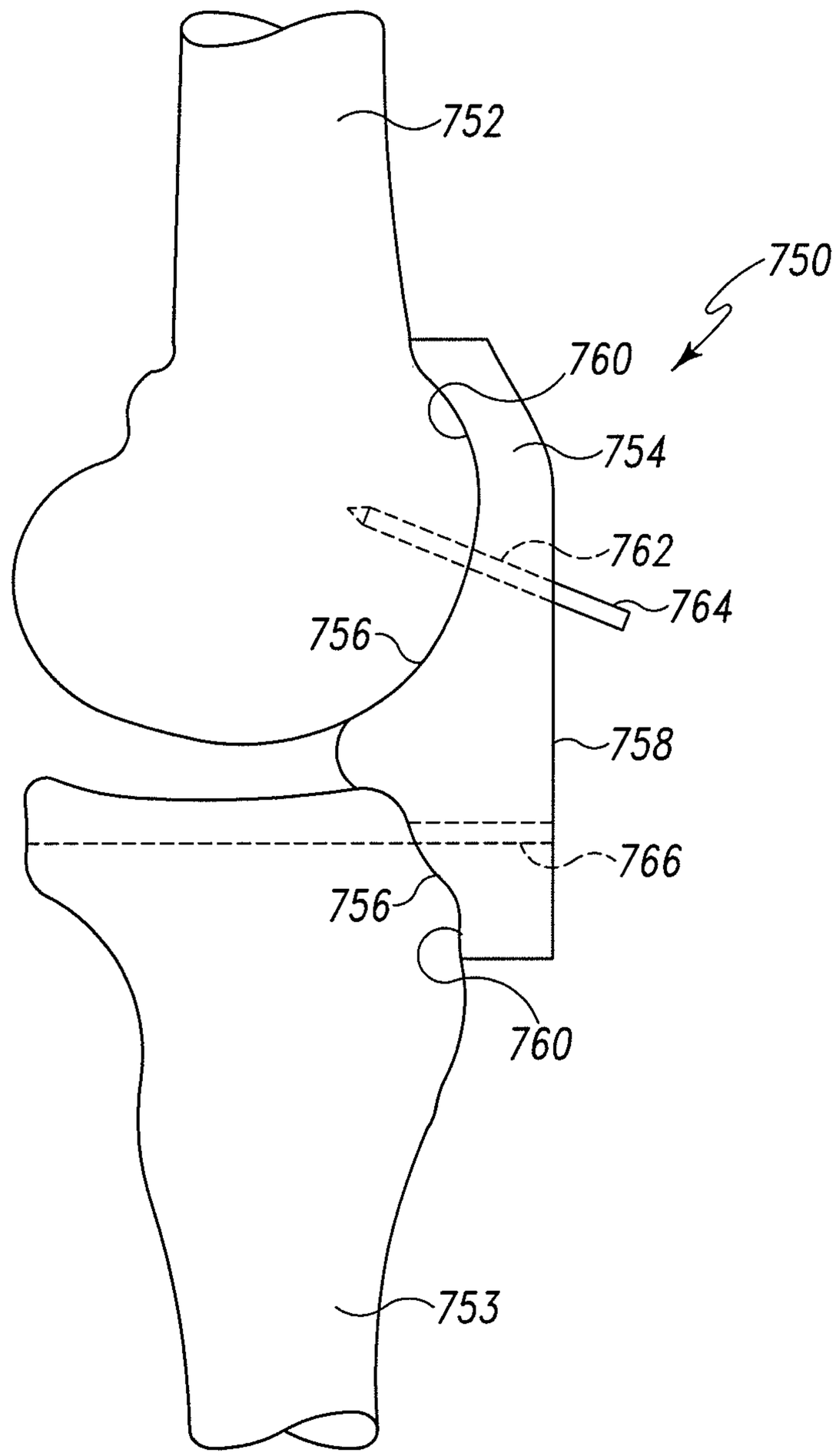

Fig. 39

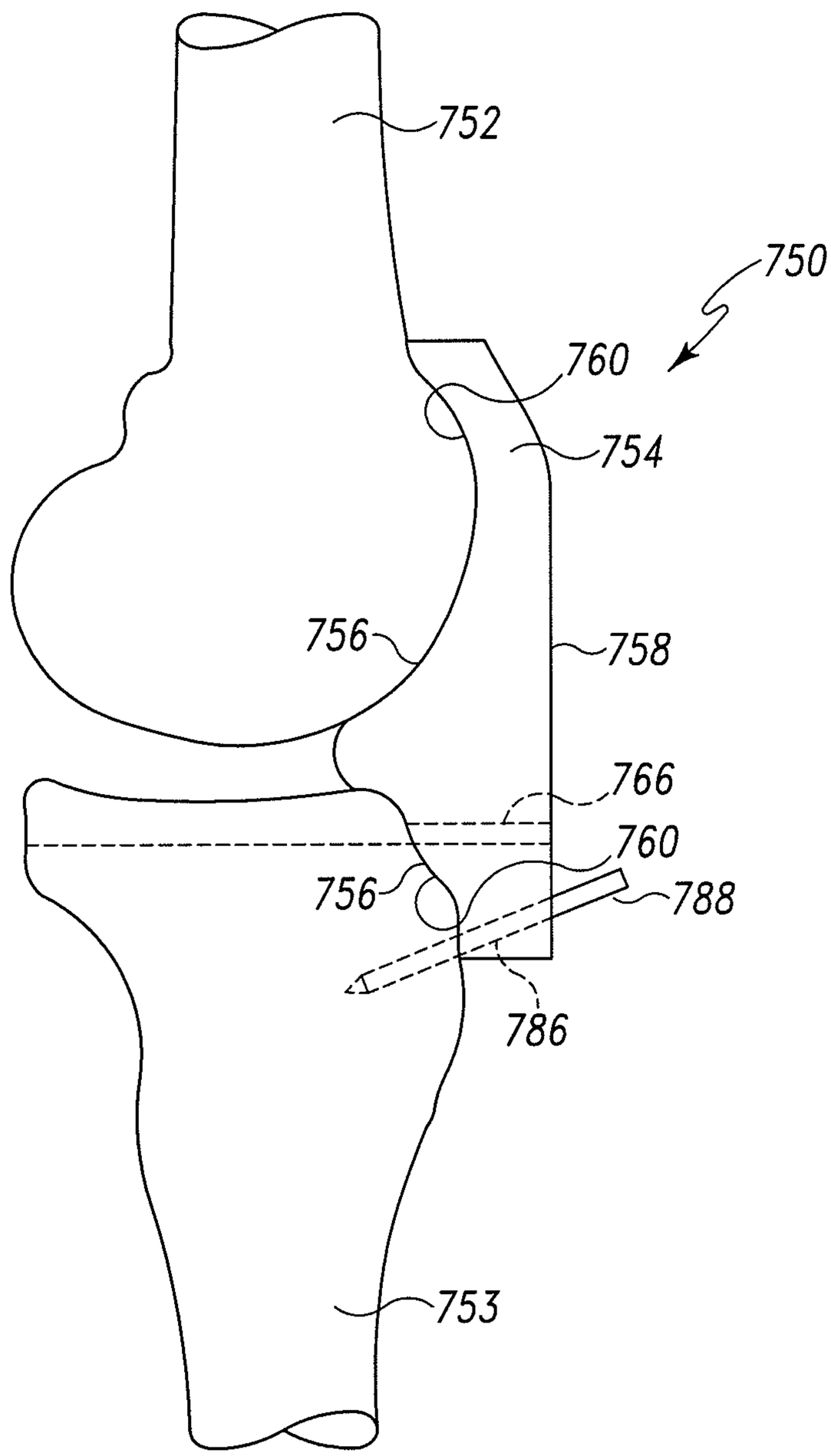

Fig. 40

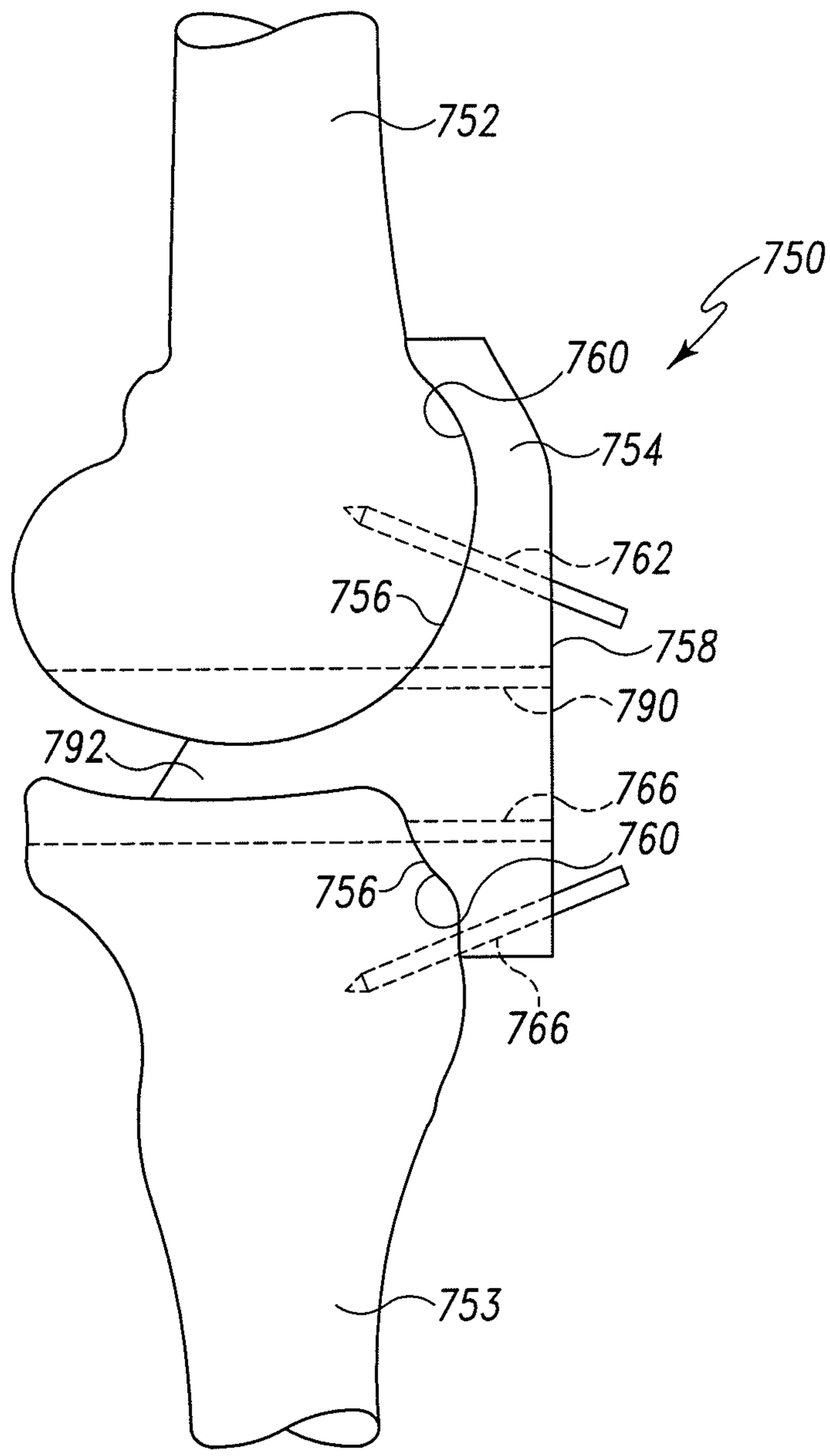

Fig. 41

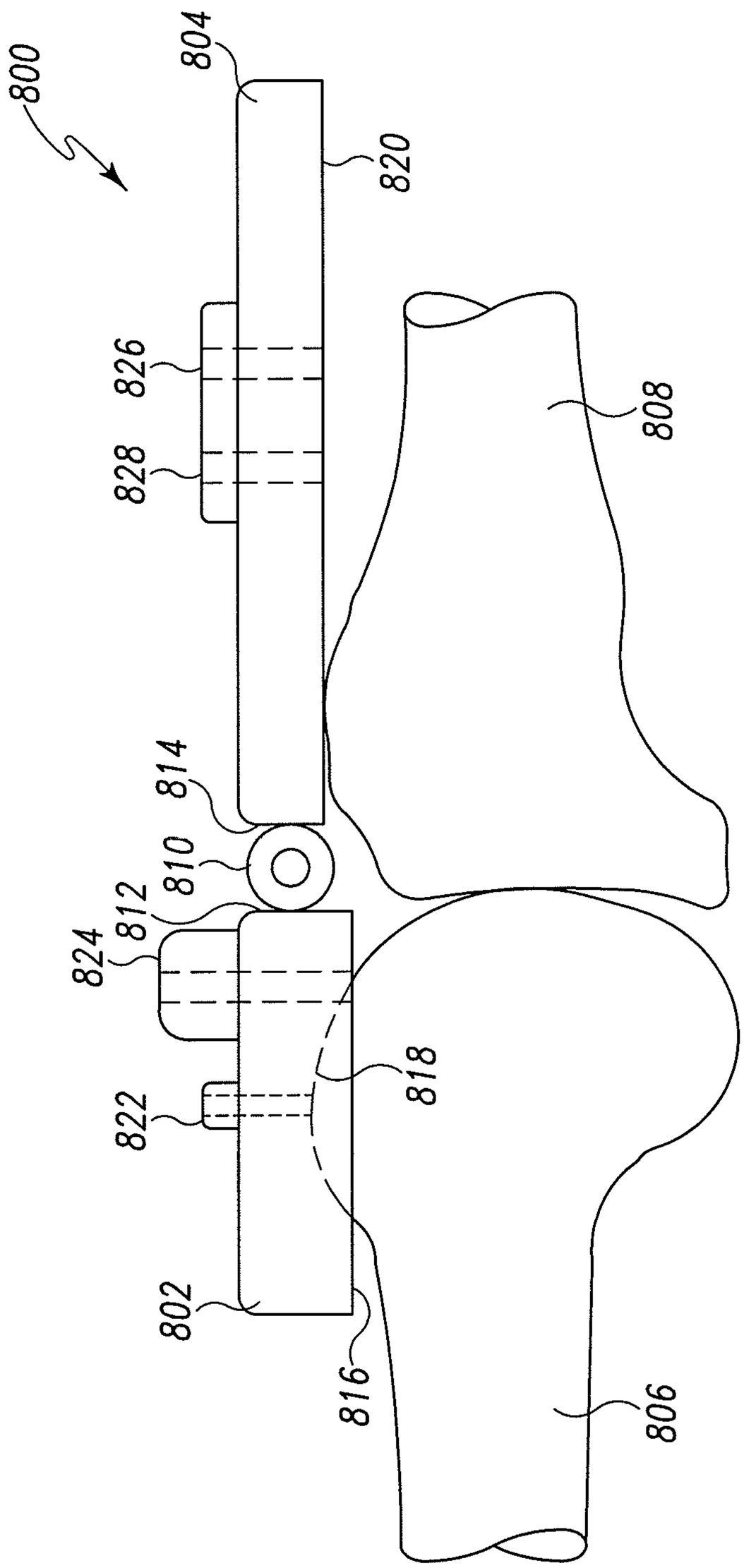

Fig. 42

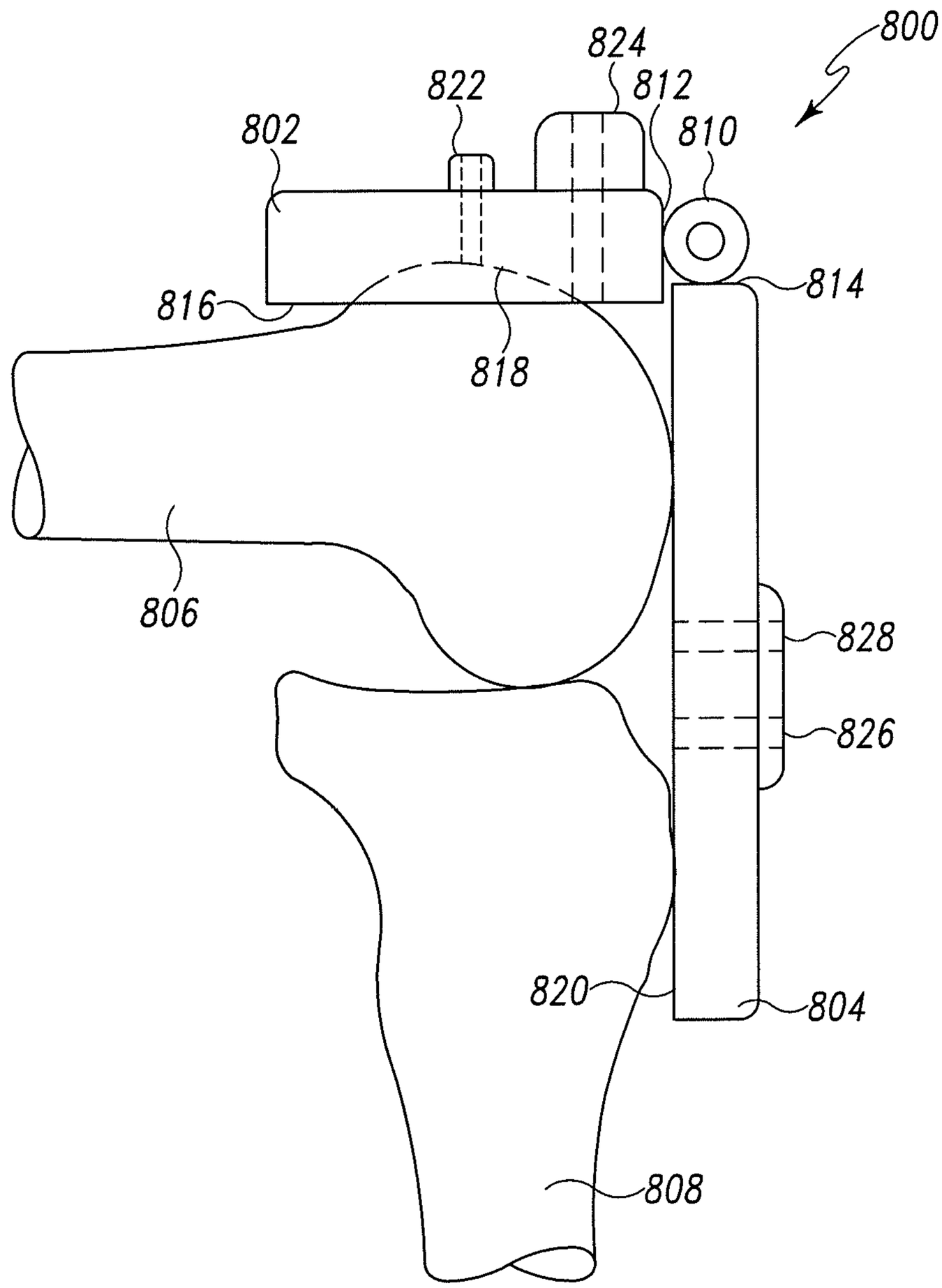

Fig. 43

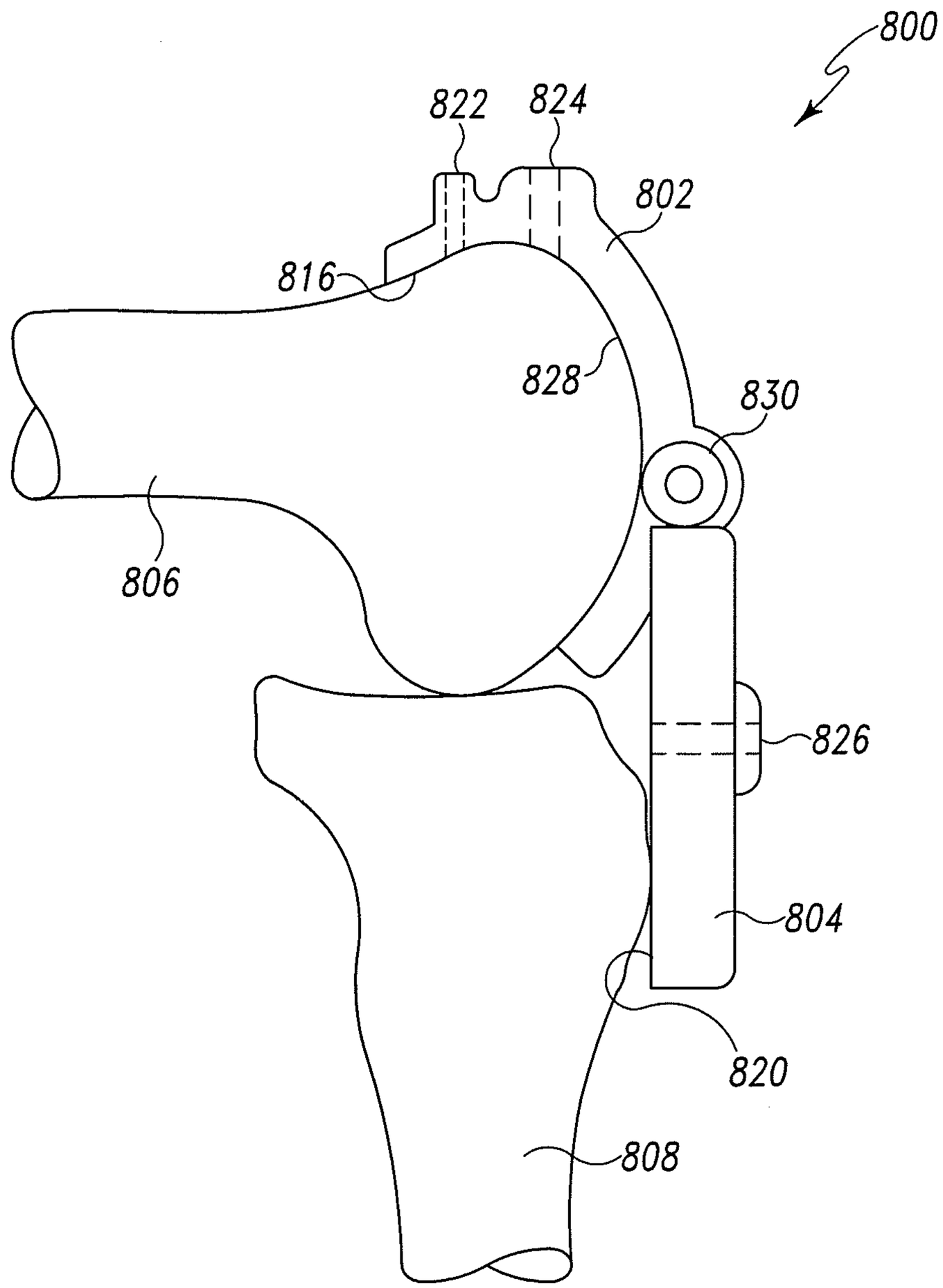

Fig. 44

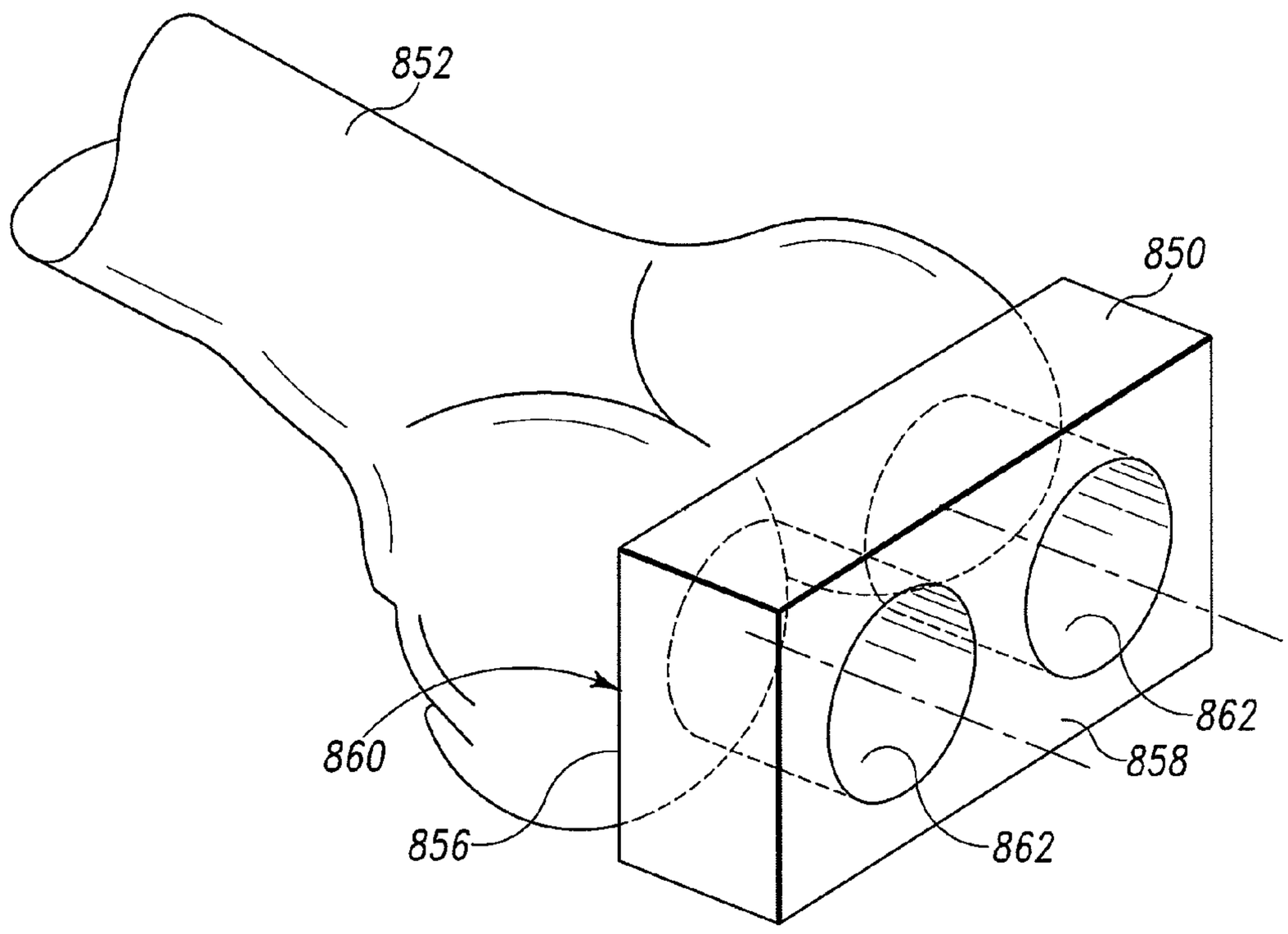

Fig. 45

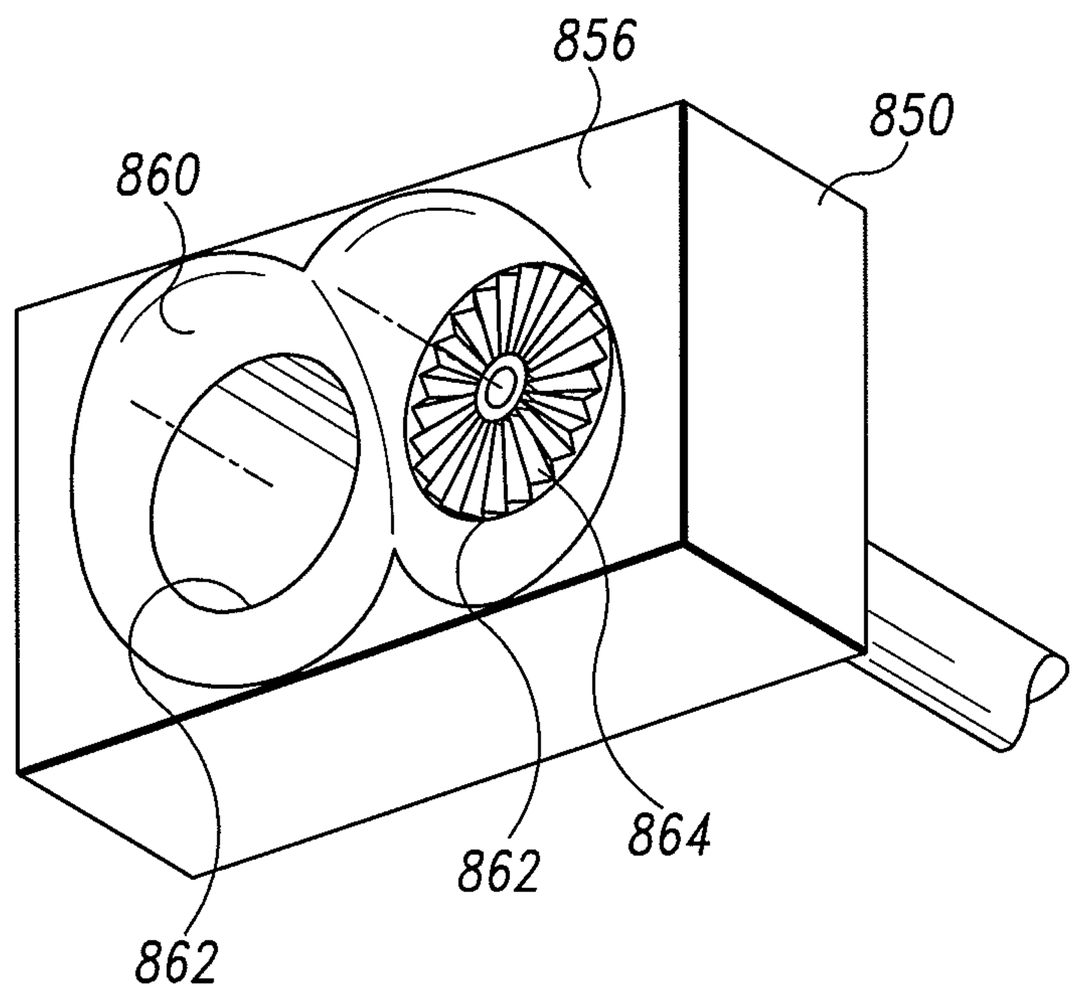

Fig. 46

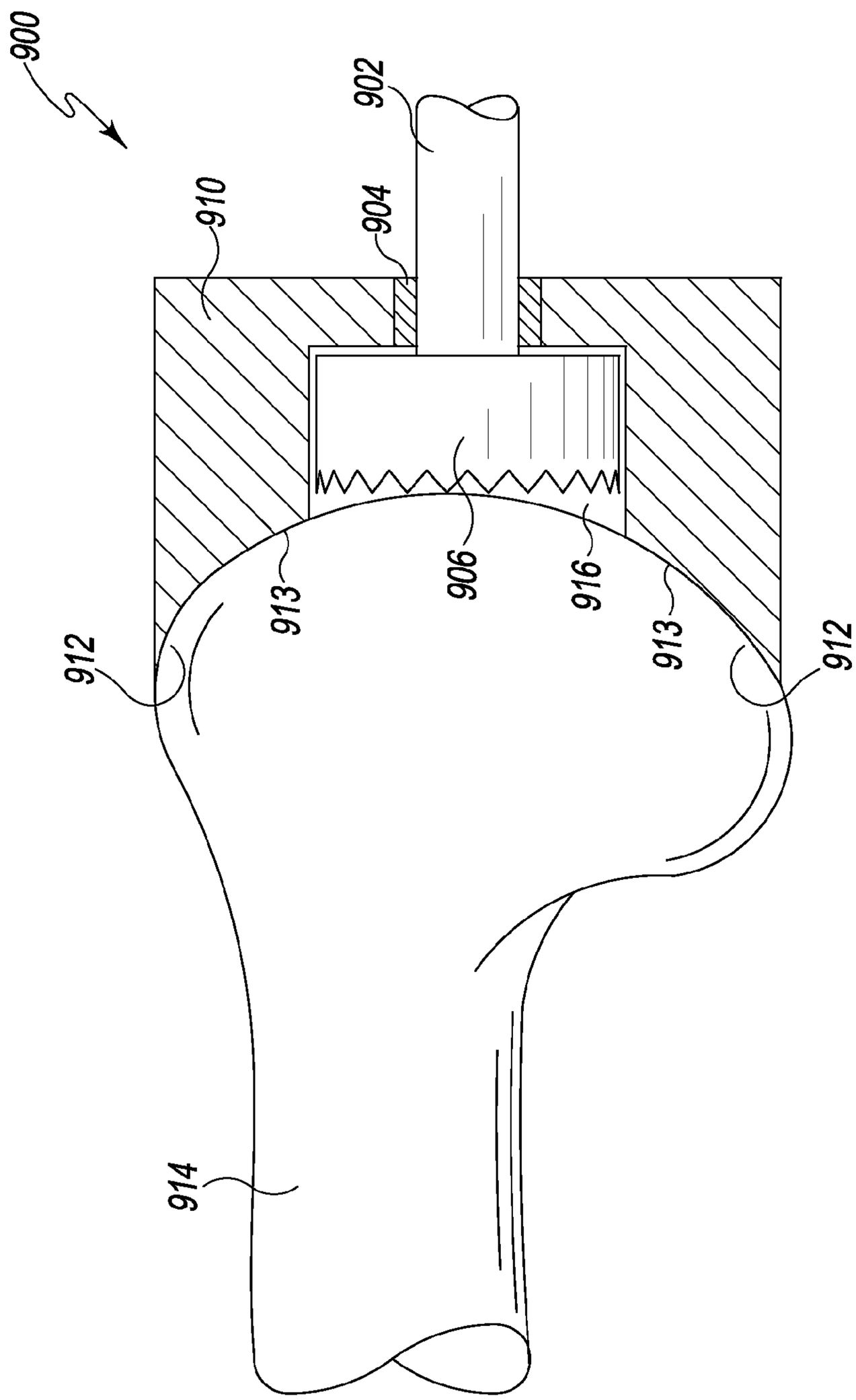

Fig. 47

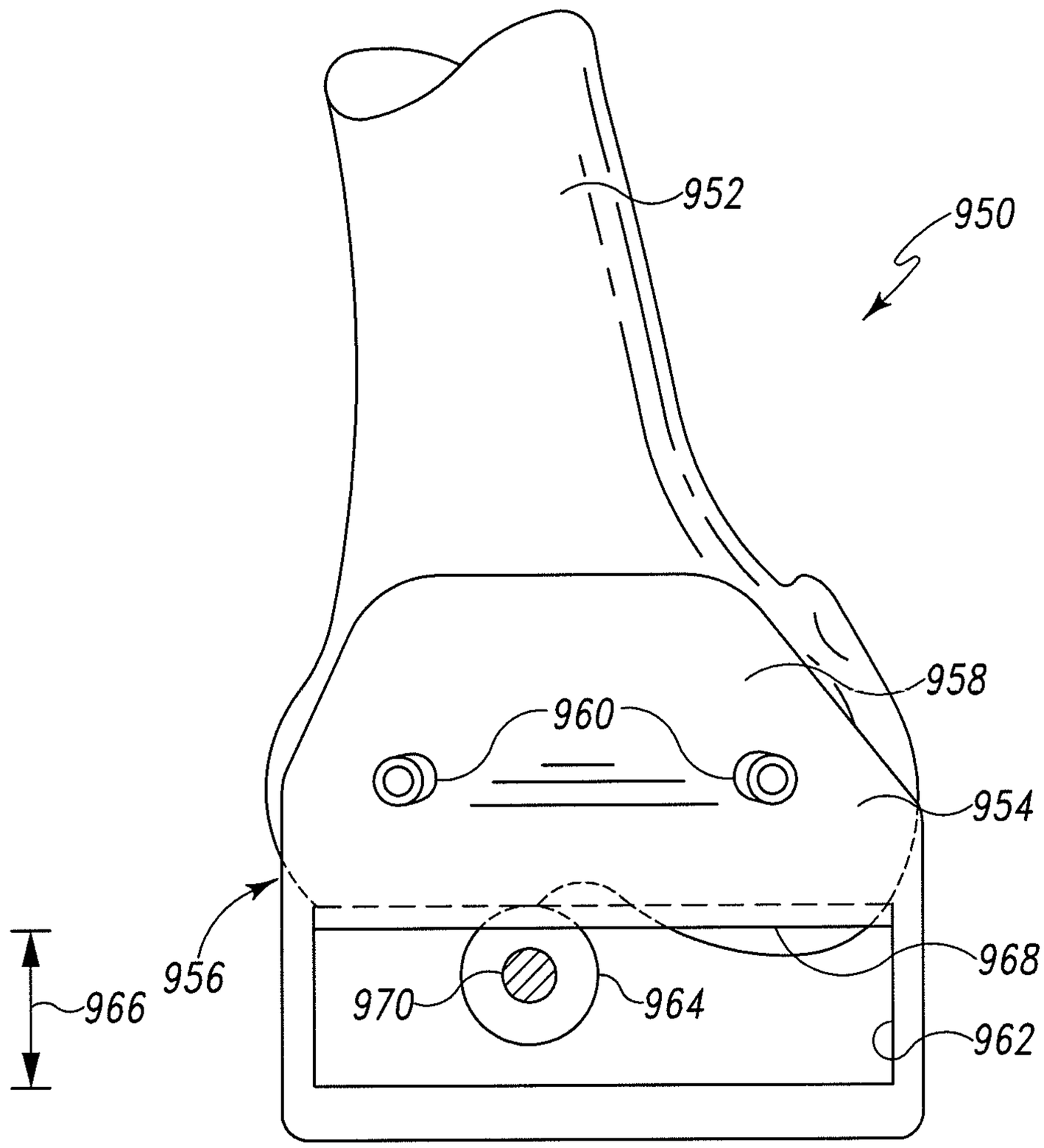

Fig. 48

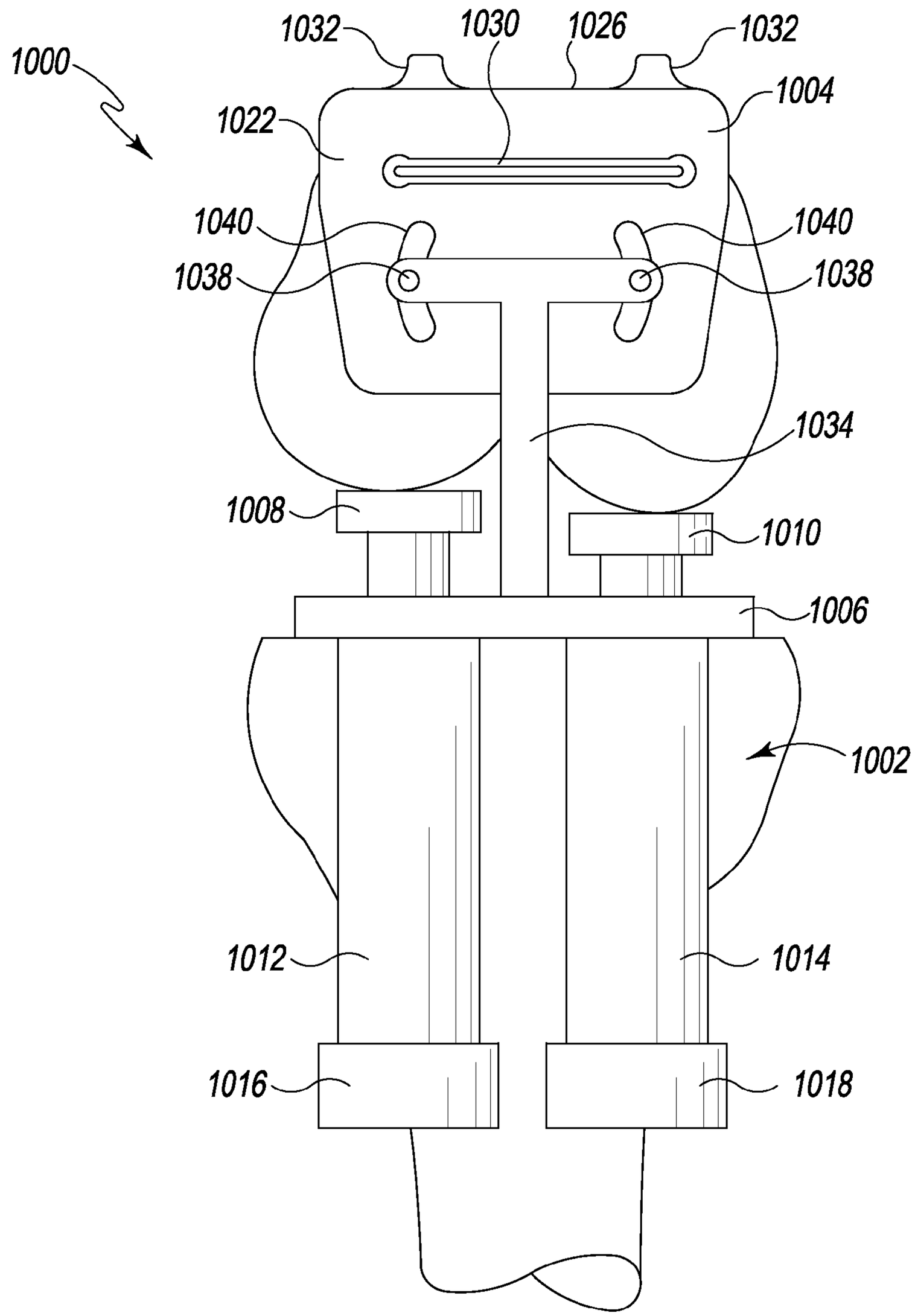
1000
1032
1030
1026
1032
1004
1022
1040
1040
1038
1038
1034
1008
1010
1006
1002
1012
1014
1016
1018

Fig. 49

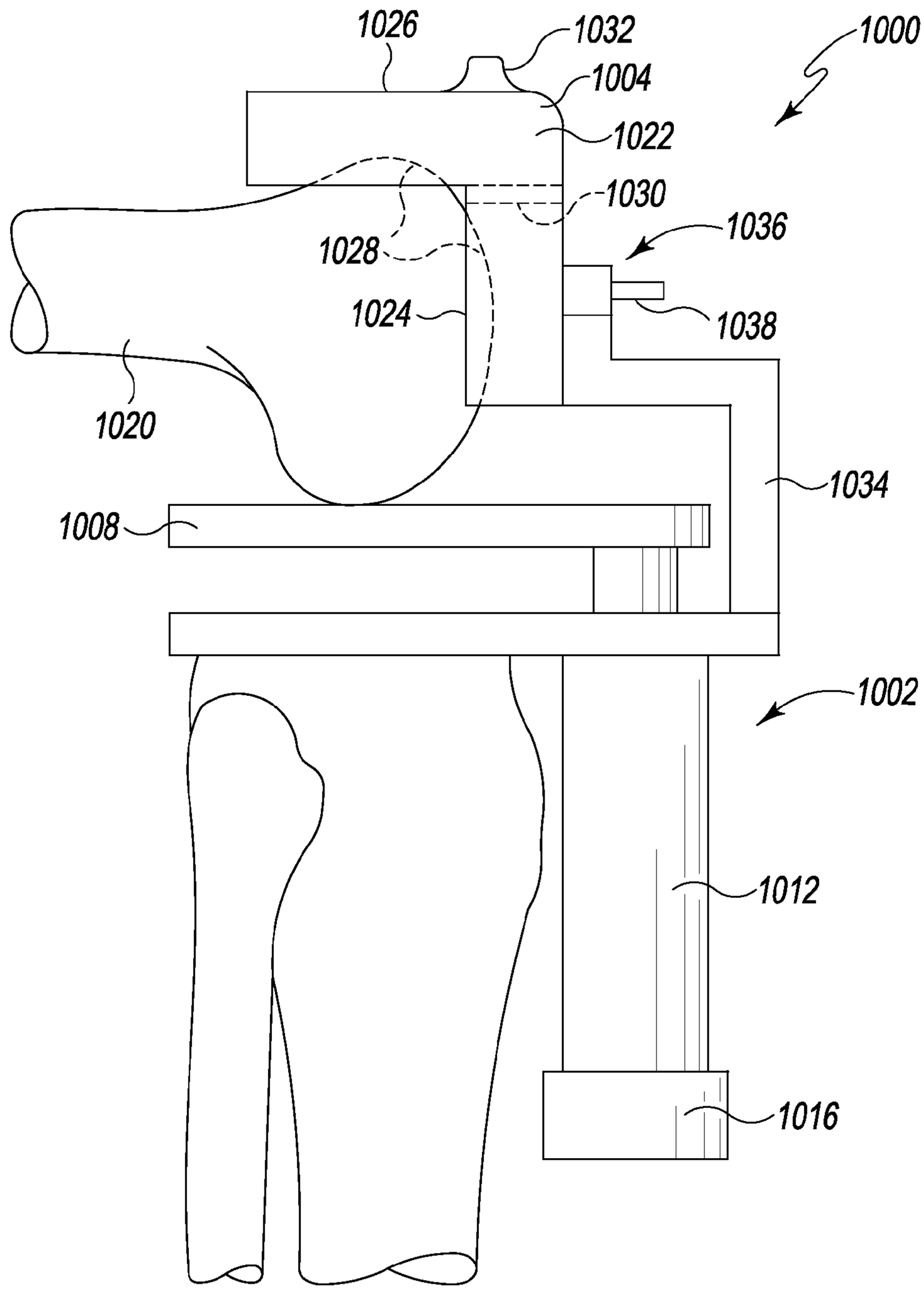
1026
1032
1000
1004
1022
1030
1036
1028
1024
1038
1020
1034
1008
1002
1012
1016

Fig. 50

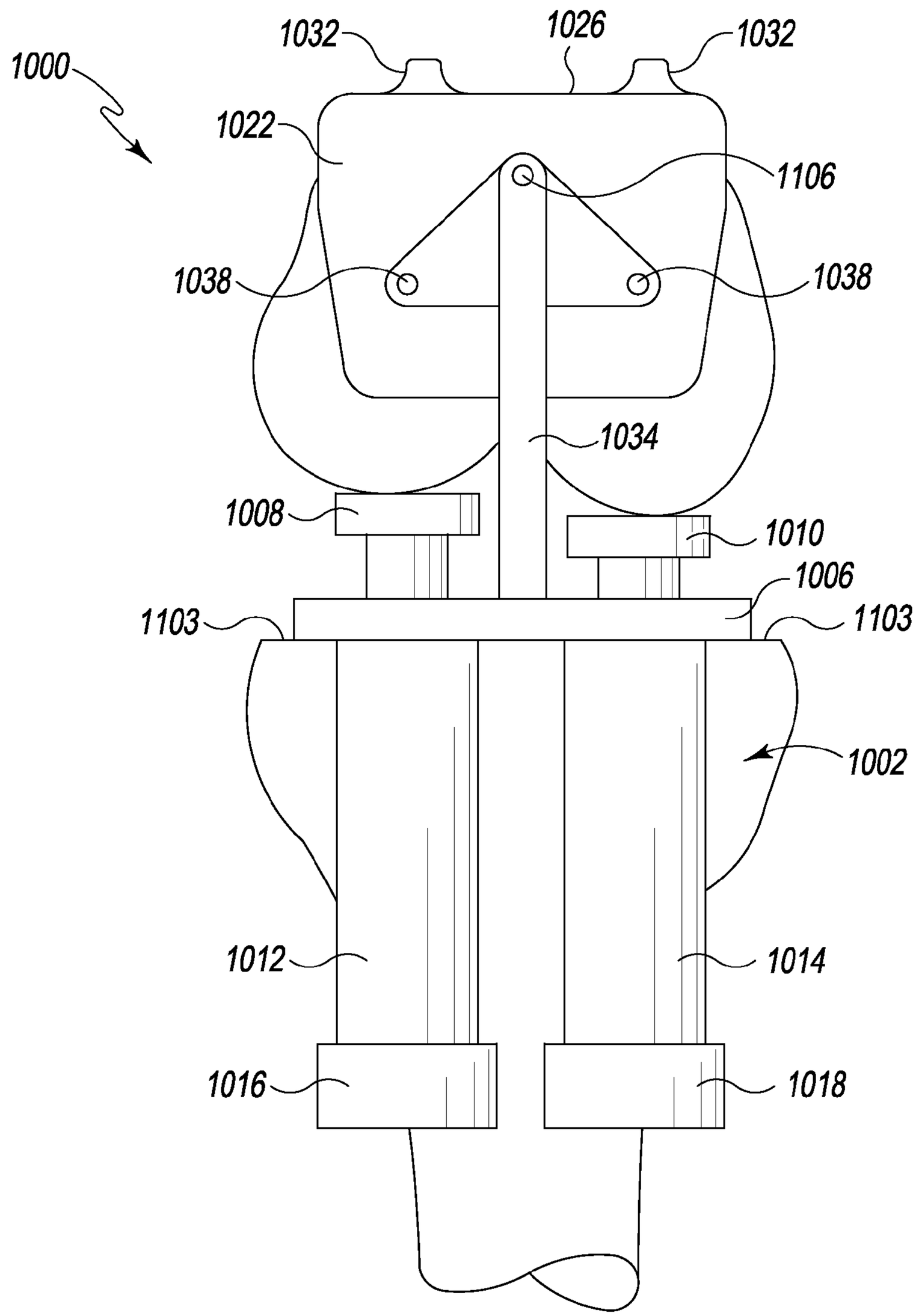
1000
1032
1026
1032
1022
1106
1038
1038
1034
1008
1010
1006
1103
1103
1002
1012
1014
1016
1018

Fig. 51

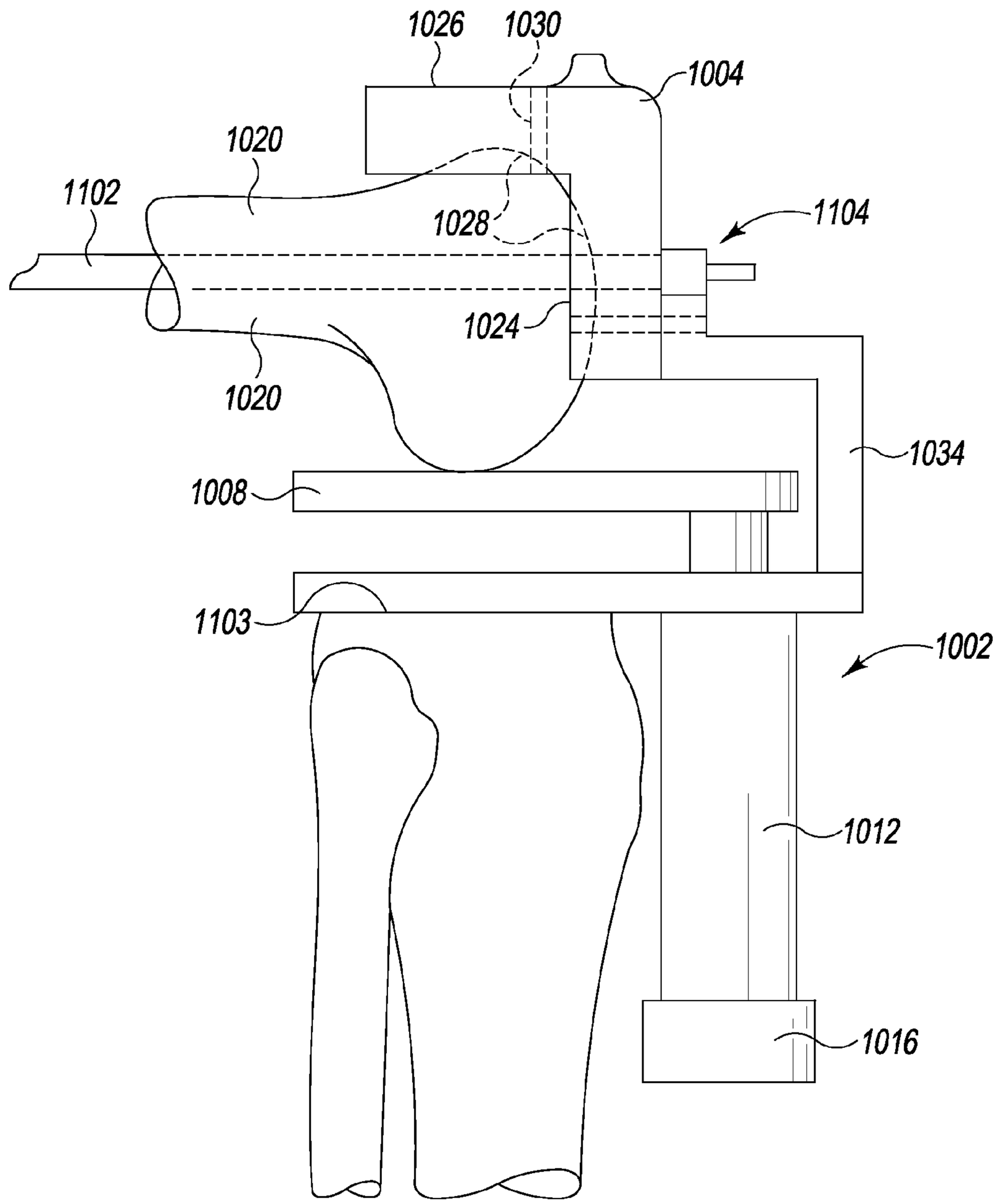
1026
1030
1004
1020
1102
1028
1104
1024
1020
1034
1008
1103
1002
1012
1016

Fig. 52

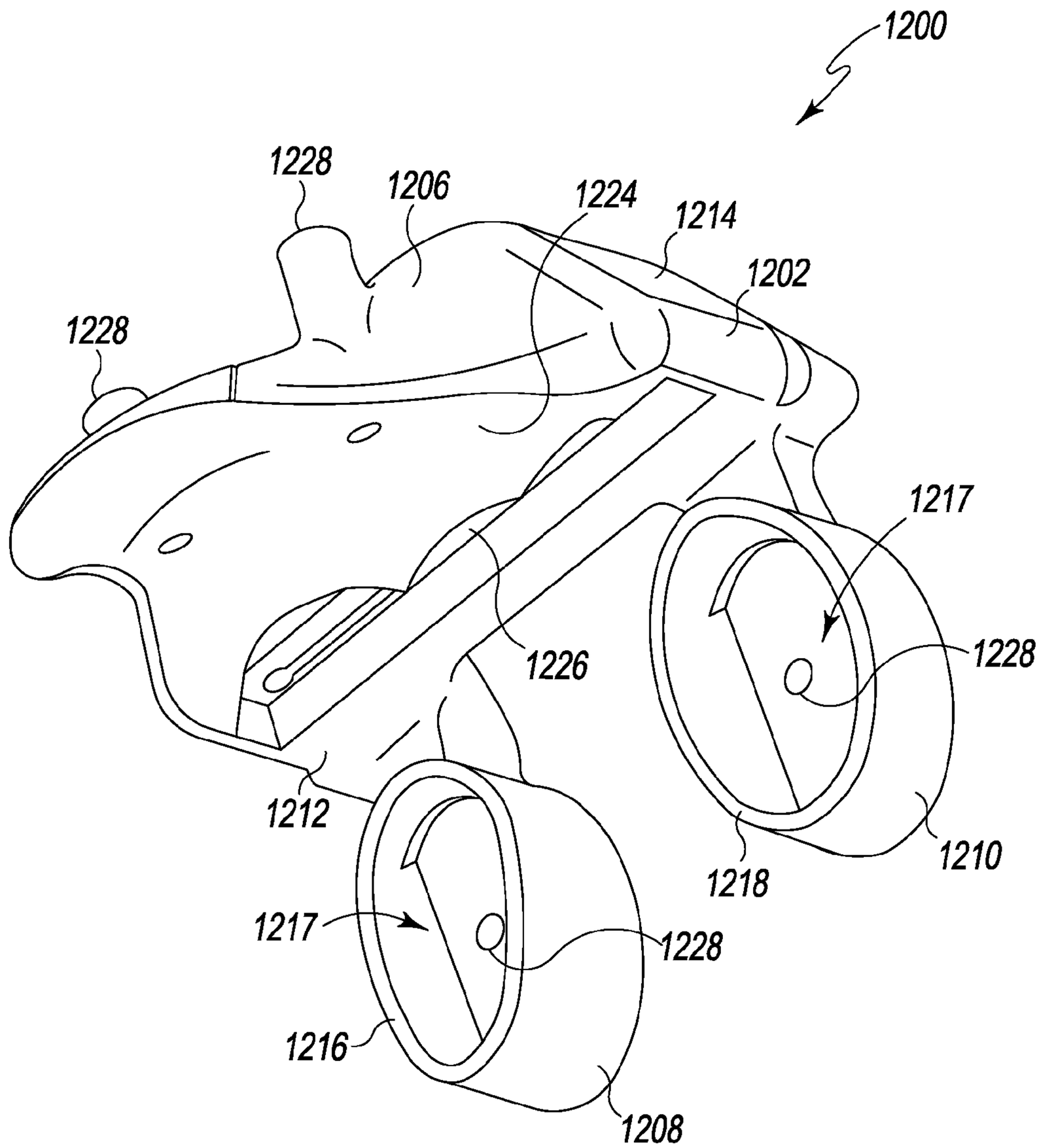
1200
1228
1206
1224
1214
1202
1228
1217
1226
1228
1212
1218
1210
1217
1228
1216
1208

Fig. 53

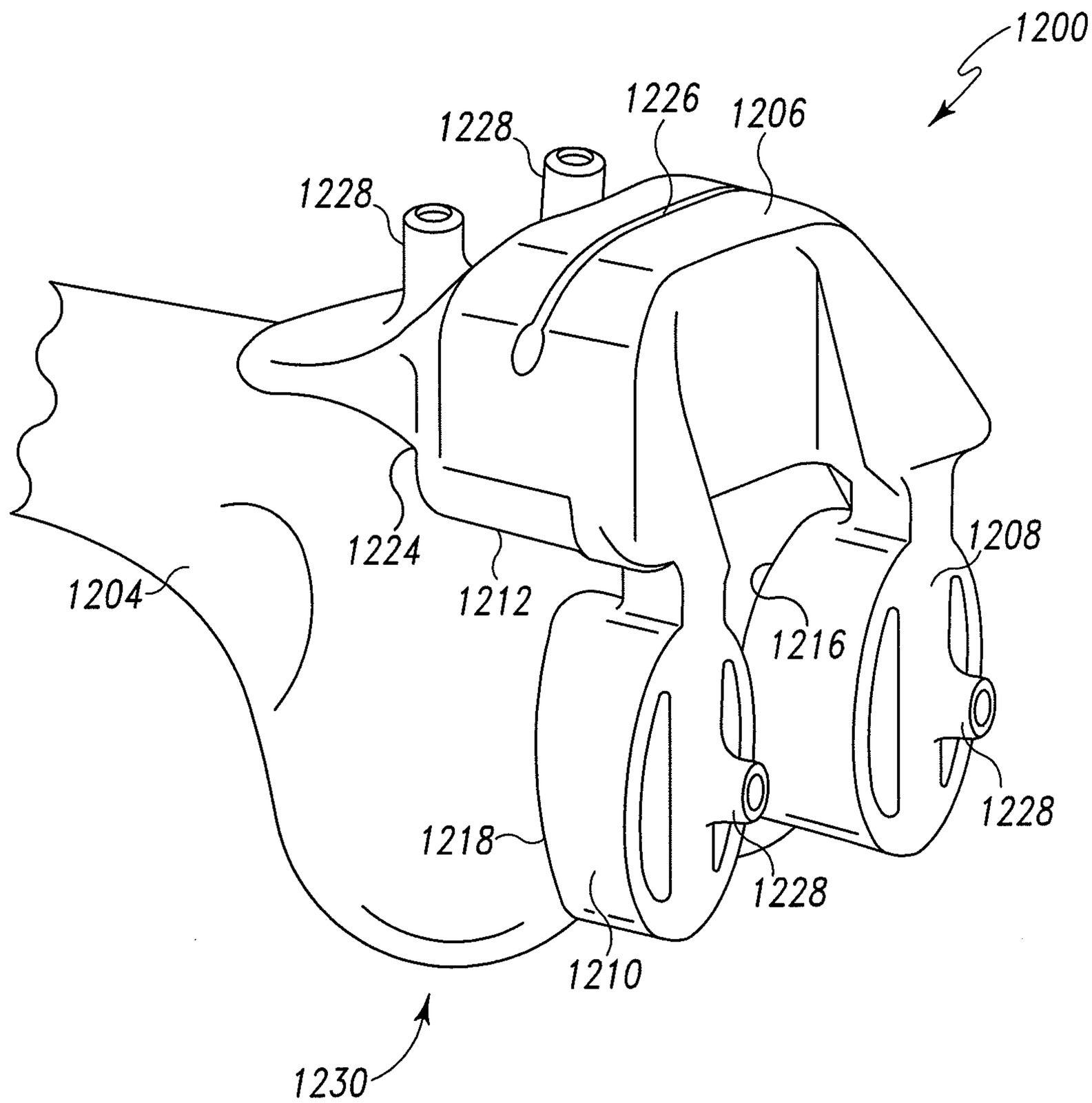
1200
1226
1206
1228
1228
1224
1212
1204
1208
1216
1228
1218
1228
1210
1230

Fig. 54

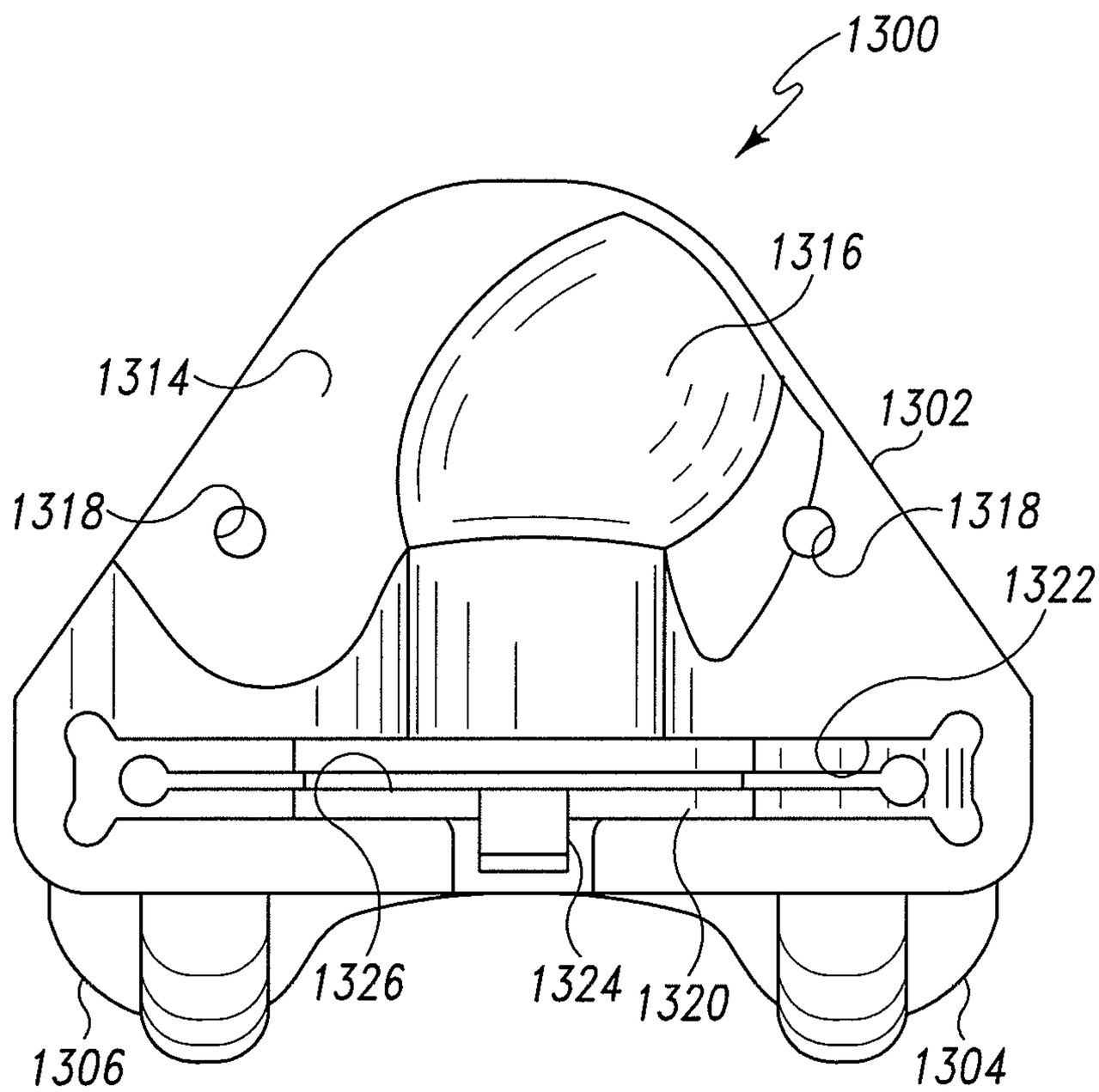

Fig. 55

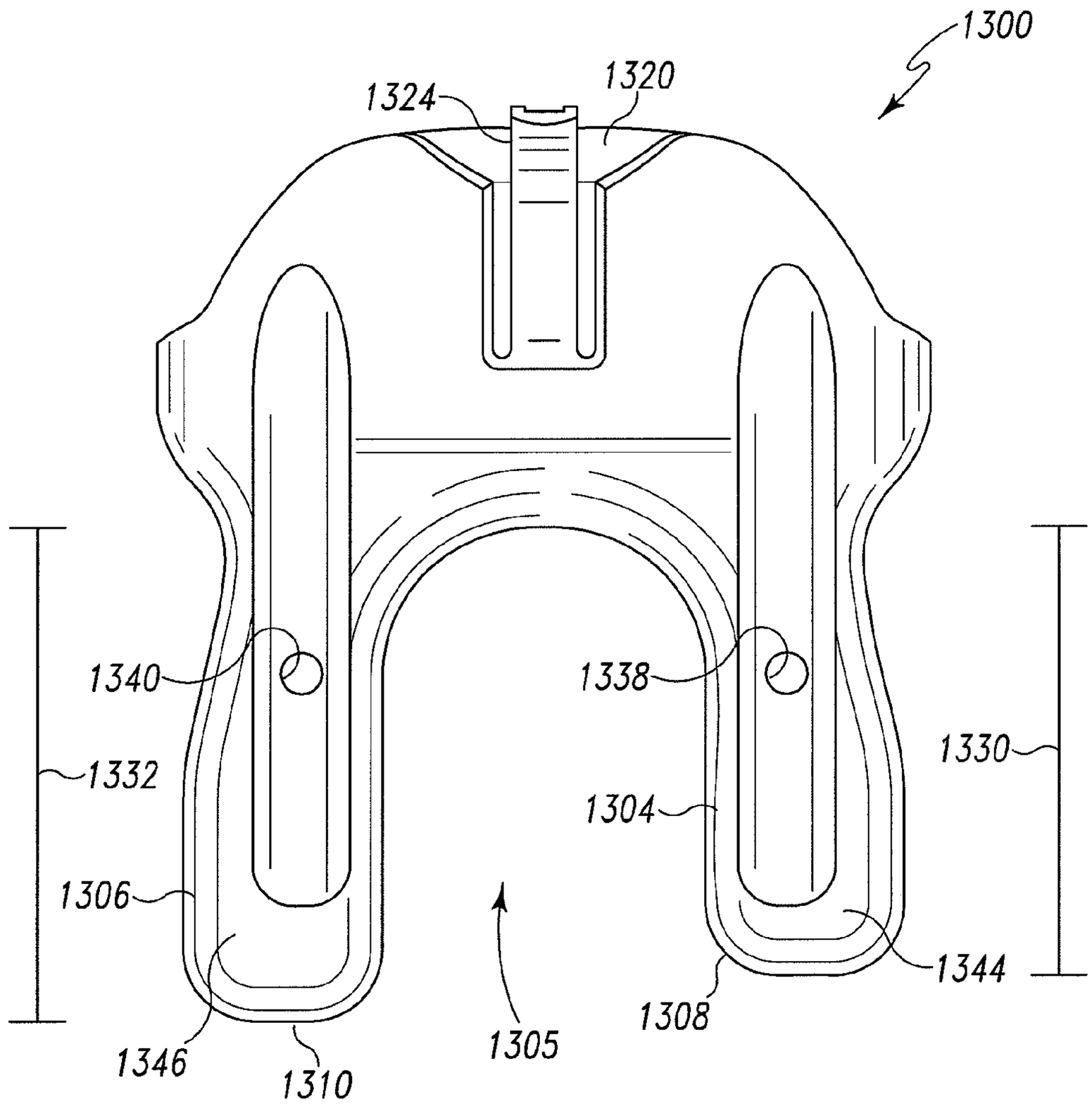
1300
1324
1320
1340
1338
1332
1330
1304
1306
1344
1308
1346
1310
1305

Fig. 56

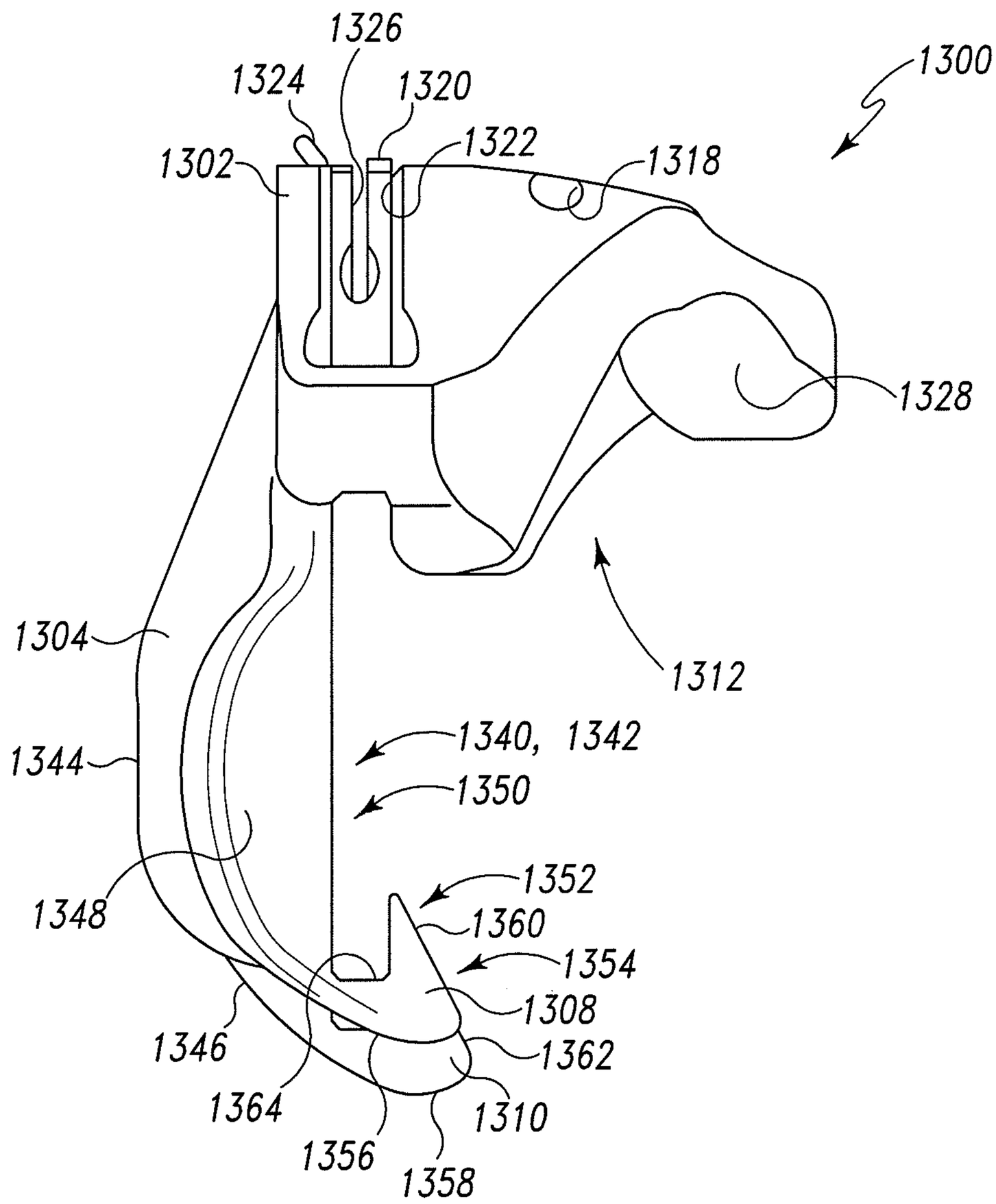
1326
1324
1320
1300
1322
1302
1318
1328
1304
1312
1340, 1342
1344
1350
1352
1348
1360
1354
1308
1346
1362
1364
1310
1356
1358

Fig. 57

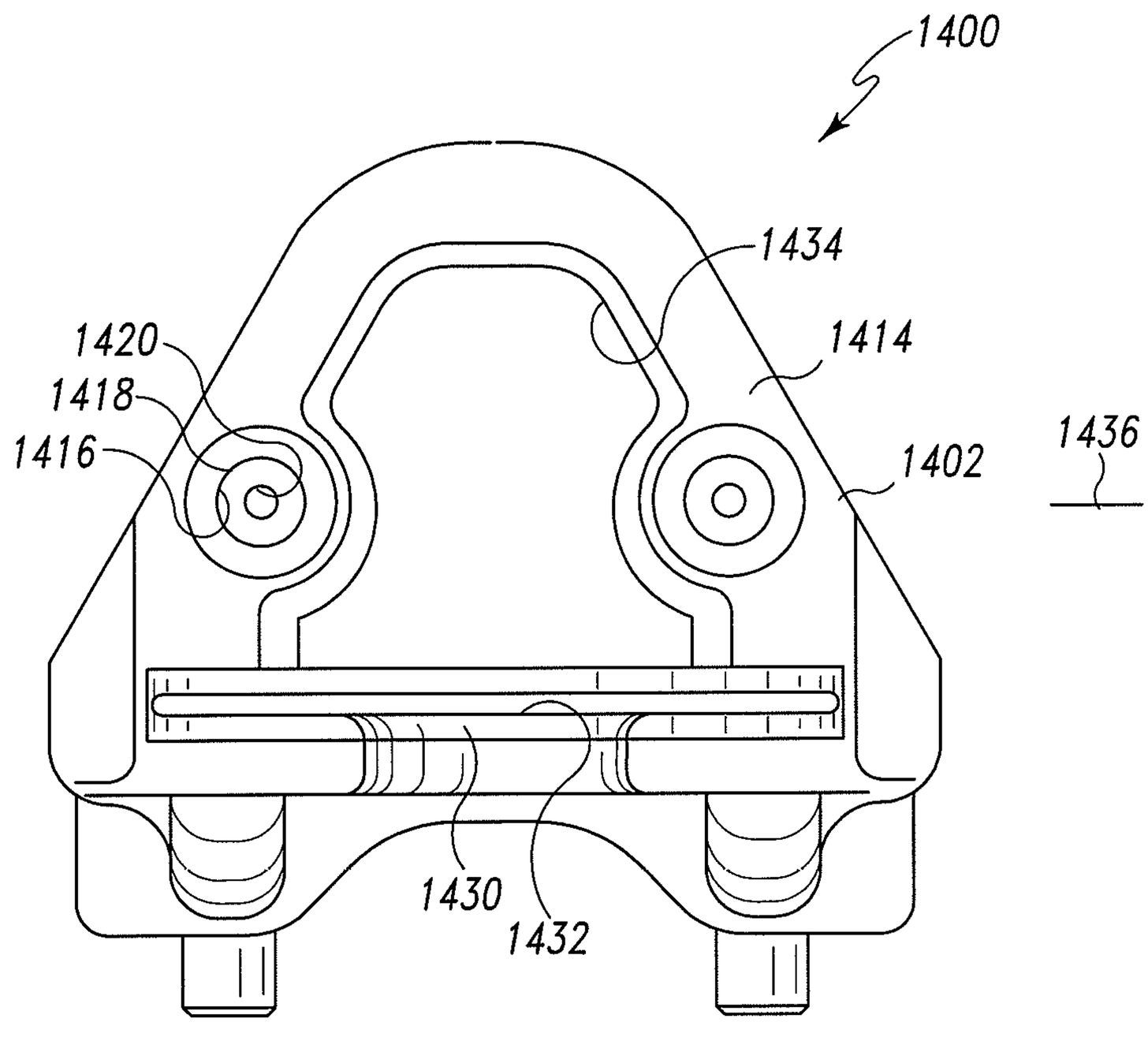

Fig. 58

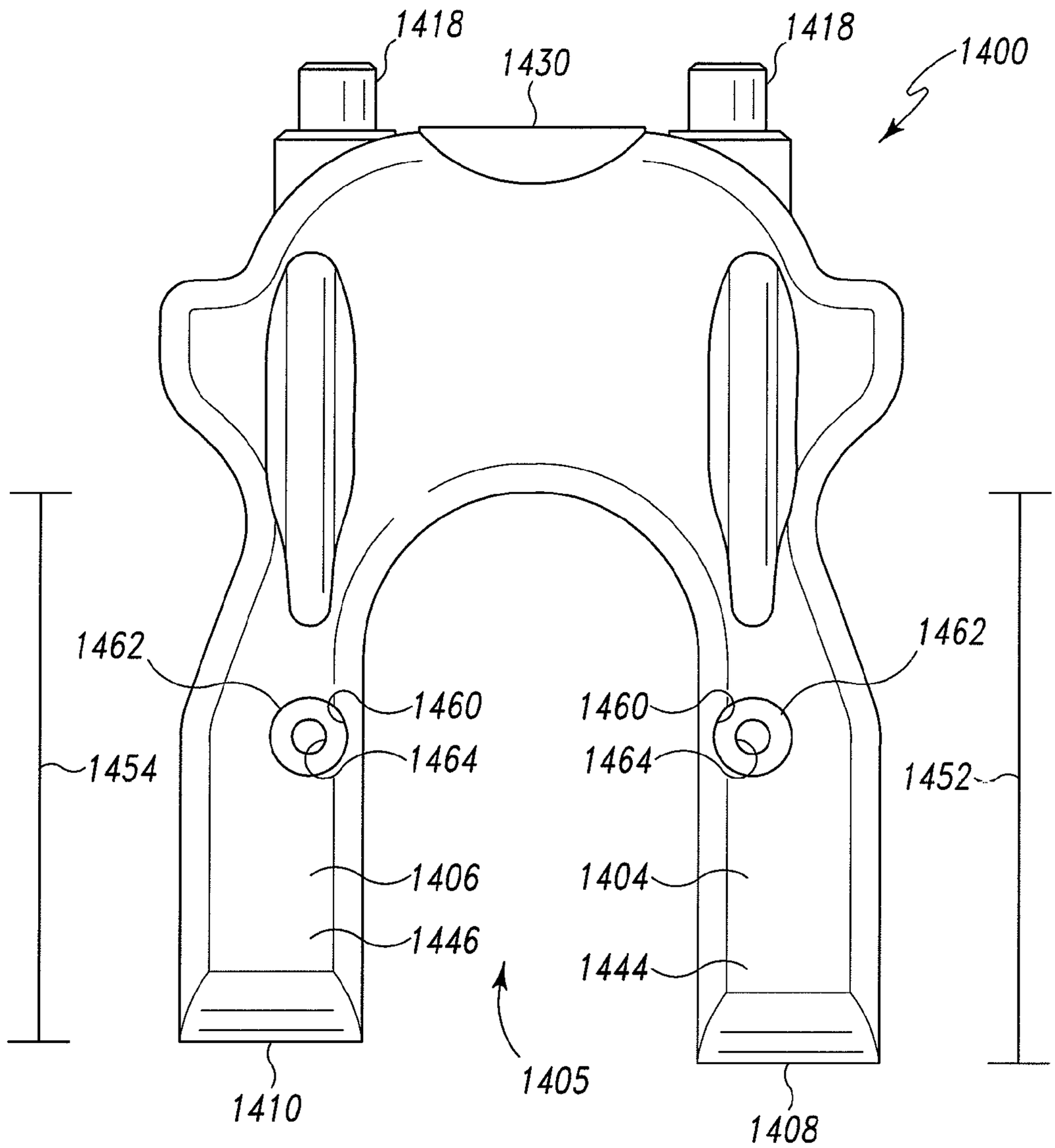
1418
1430
1418
1400
1462
1460
1460
1462
1454
1464
1464
1452
1406
1404
1446
1444
1405
1410
1408

Fig. 59

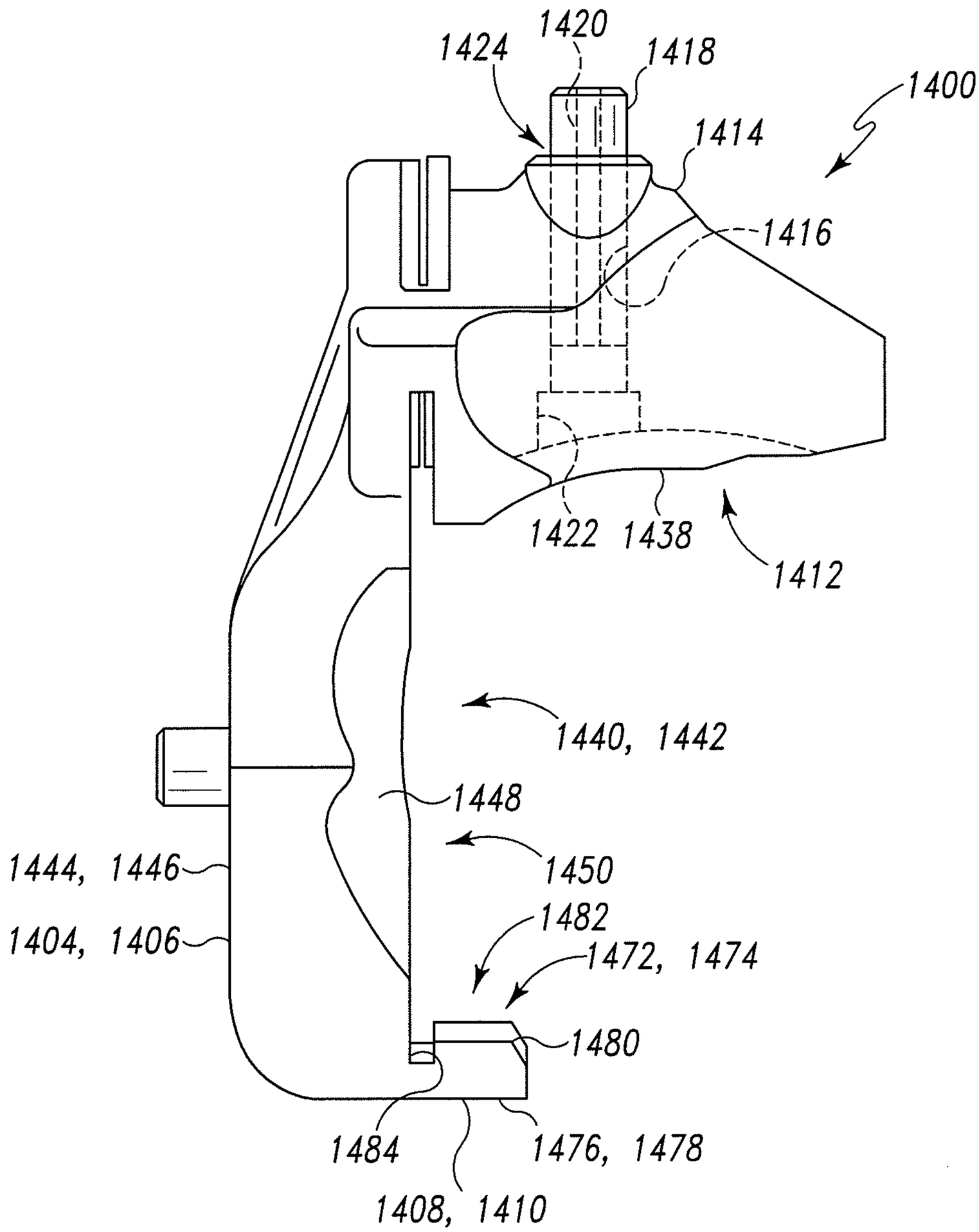
1424
1420
1418
1400
1414
1416
1422
1438
1412
1440, 1442
1448
1444, 1446
1450
1404, 1406
1482
1472, 1474
1480
1484
1476, 1478
1408, 1410

Fig. 60

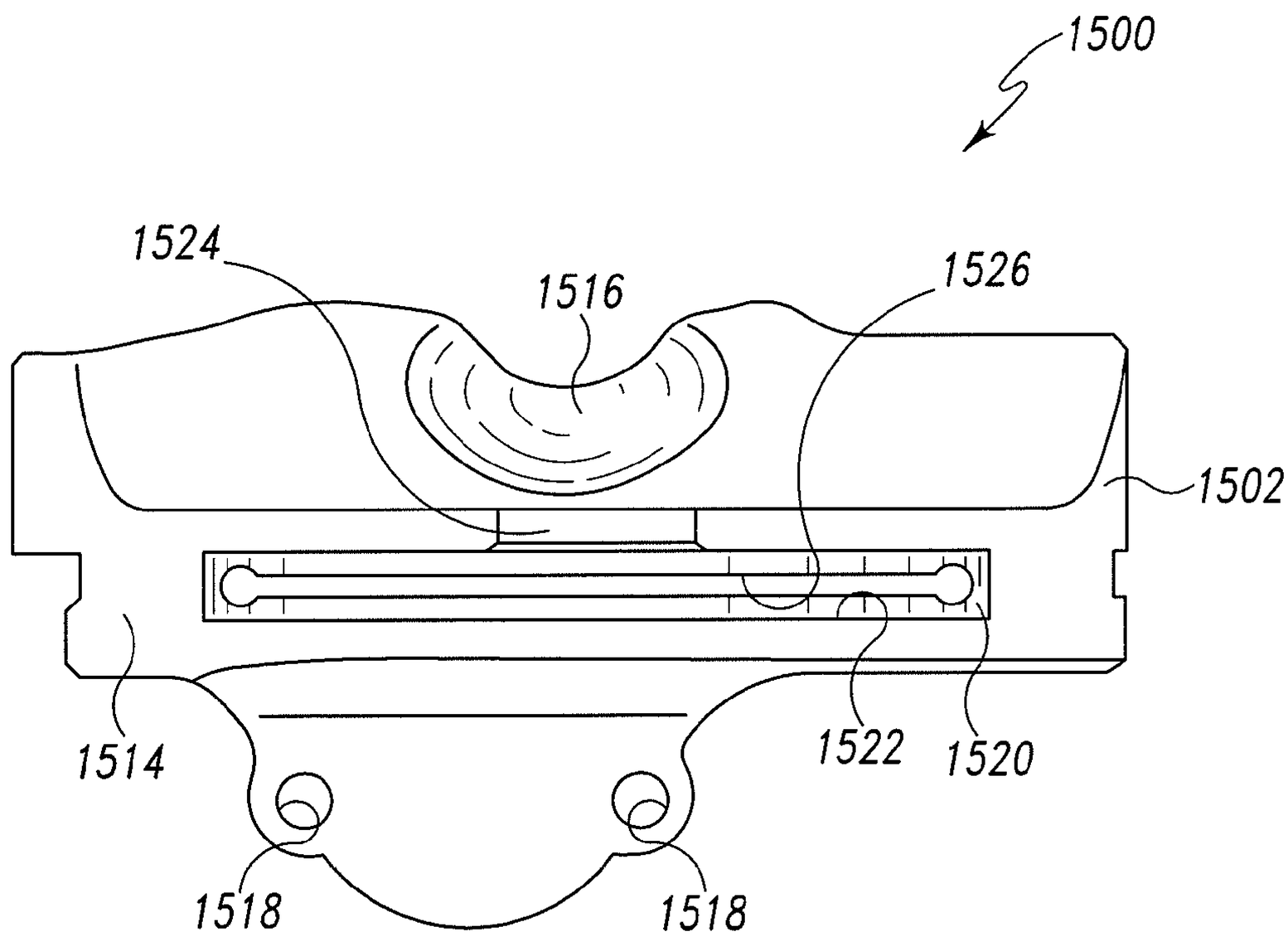

Fig. 61

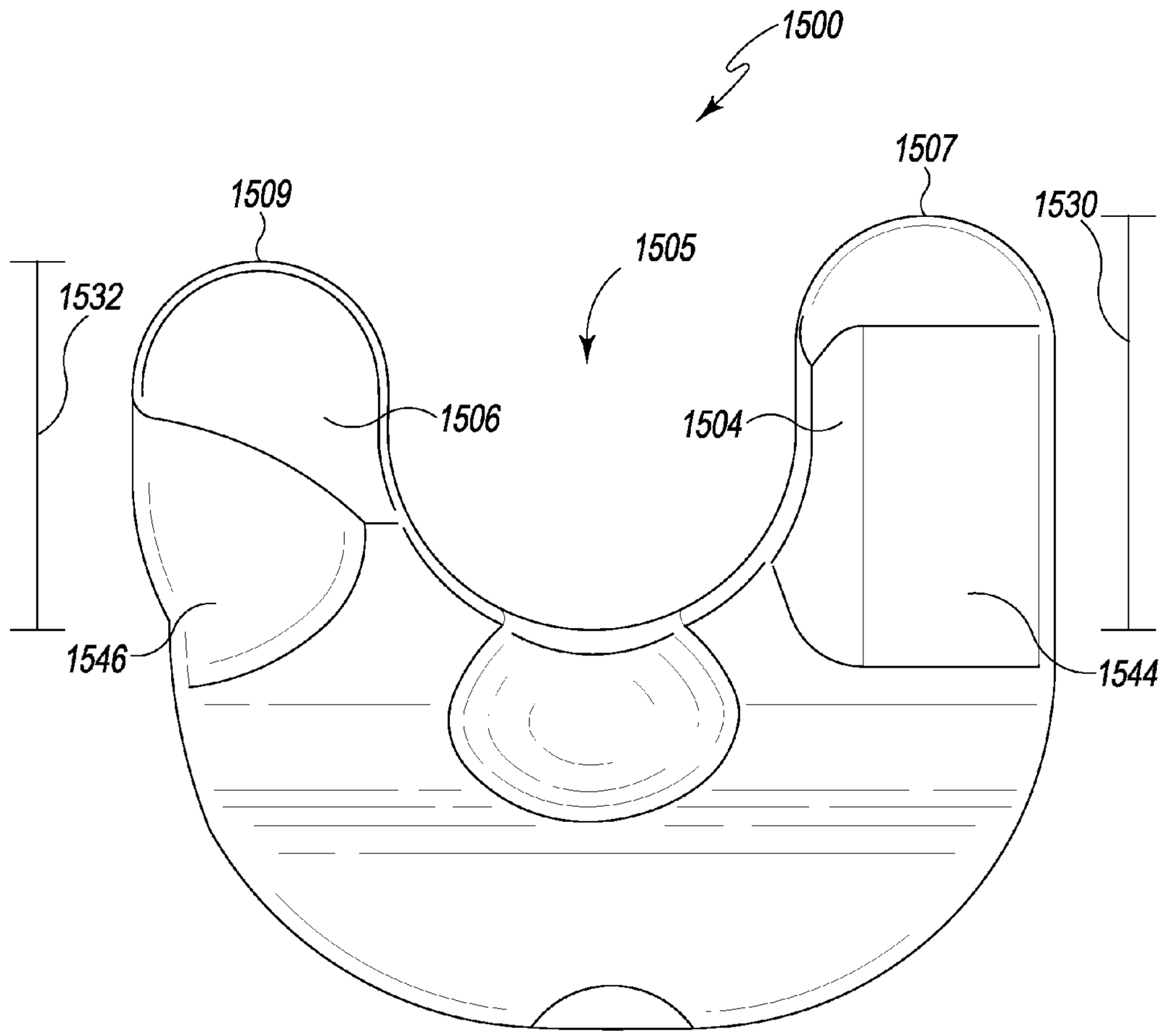

Fig. 62

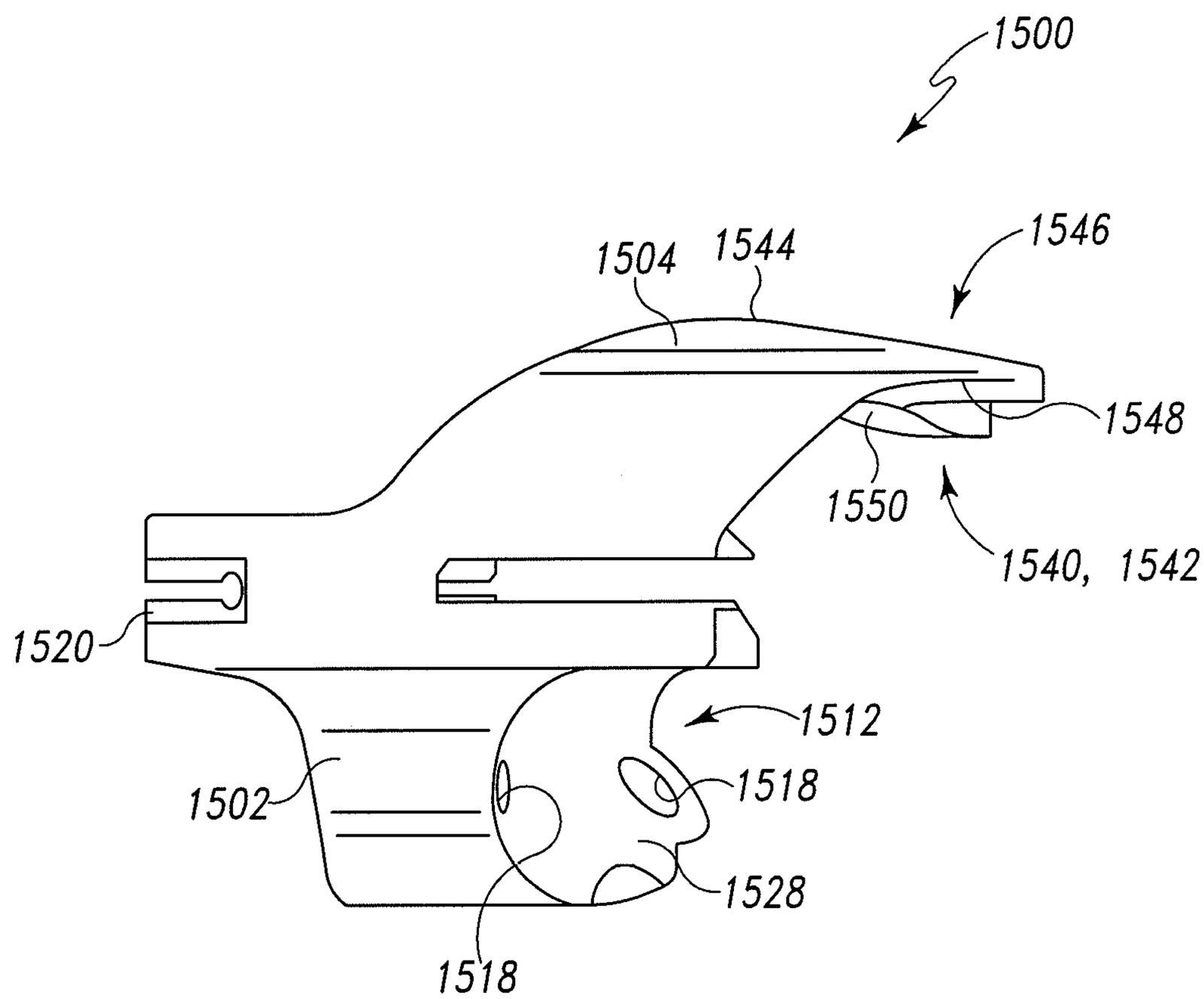
1500
1546
1504
1544
1548
1550
1540, 1542
1520
1512
1502
1518
1528
1518

Fig. 63

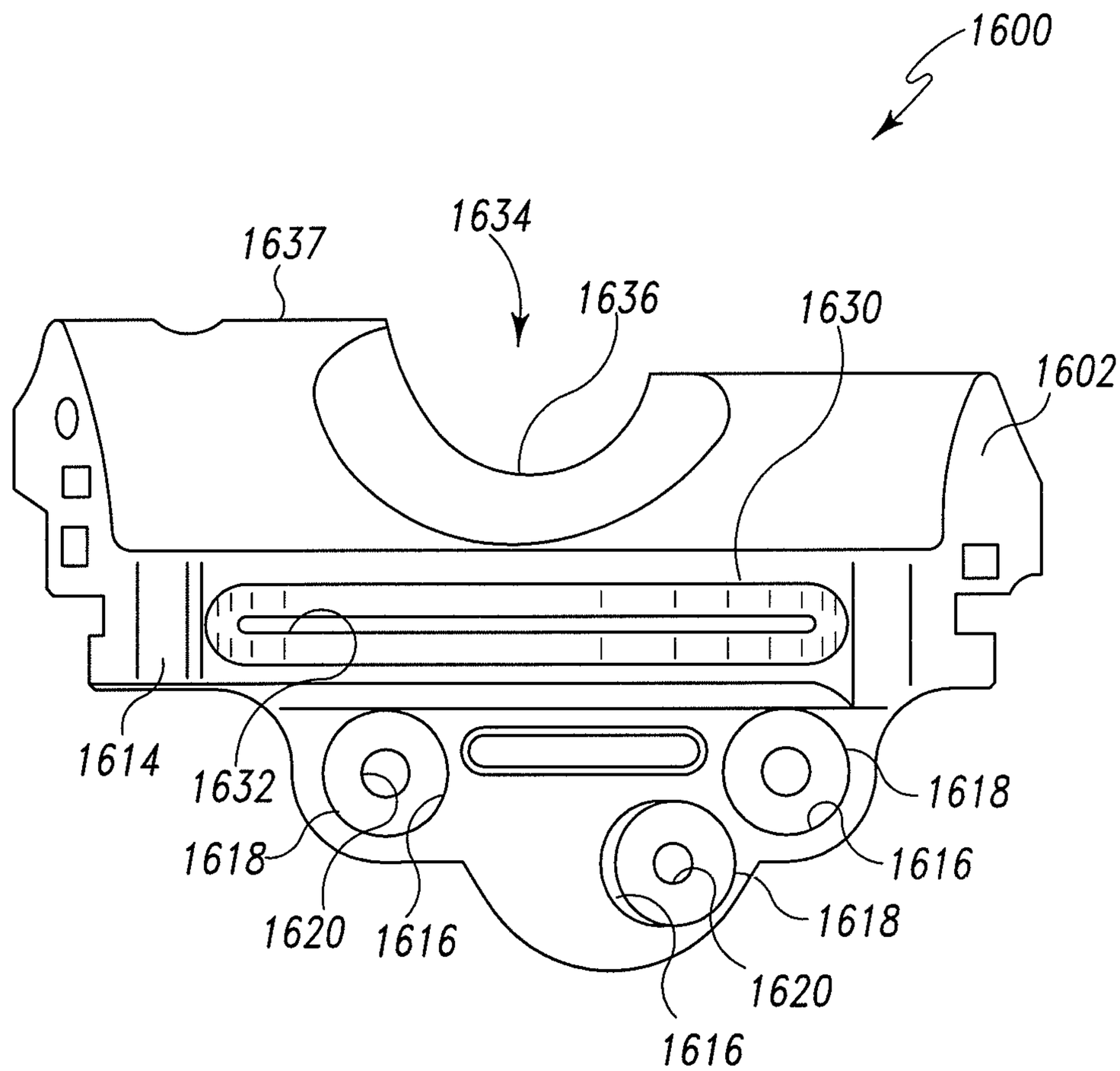
1600
1634
1637
1636
1630
1602
1614
1632
1618
1618
1616
1620
1616
1618
1620
1616

Fig. 64

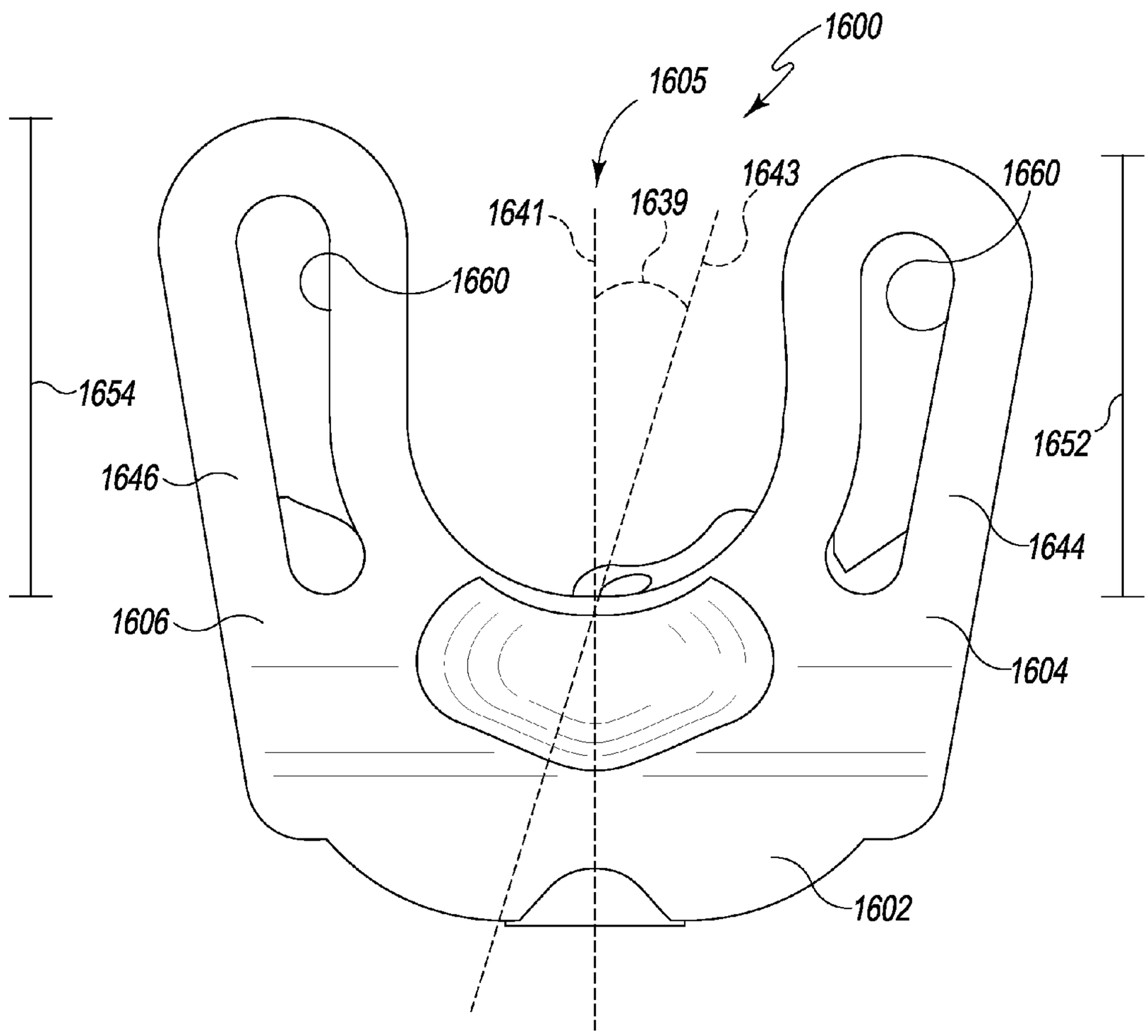
1600
1605
1641
1639
1643
1660
1660
1654
1652
1646
1644
1606
1604
1602

Fig. 65

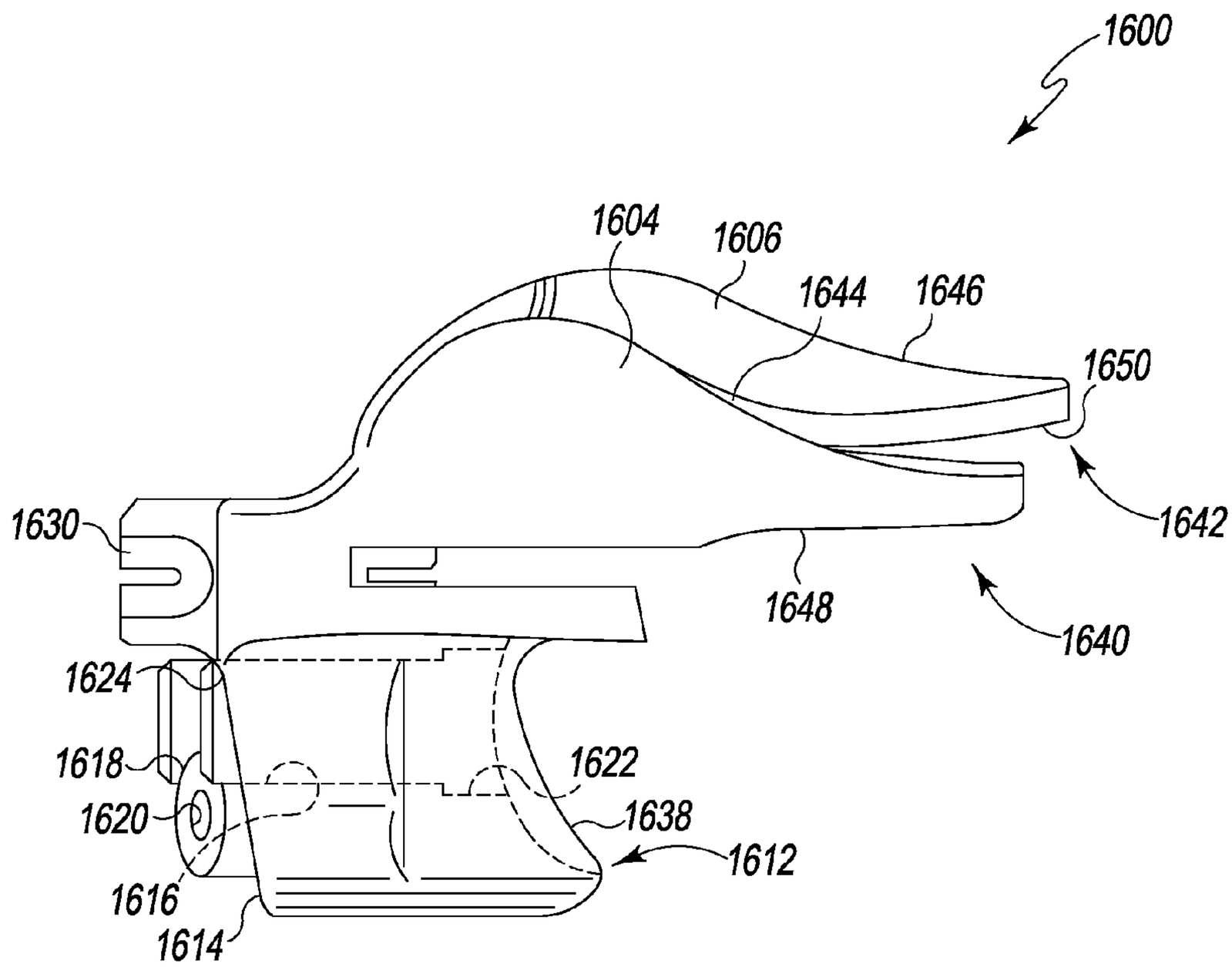
1600
1604
1606
1644
1646
1650
1642
1630
1648
1640
1624
1618
1622
1620
1638
1612
1616
1614

Fig. 66

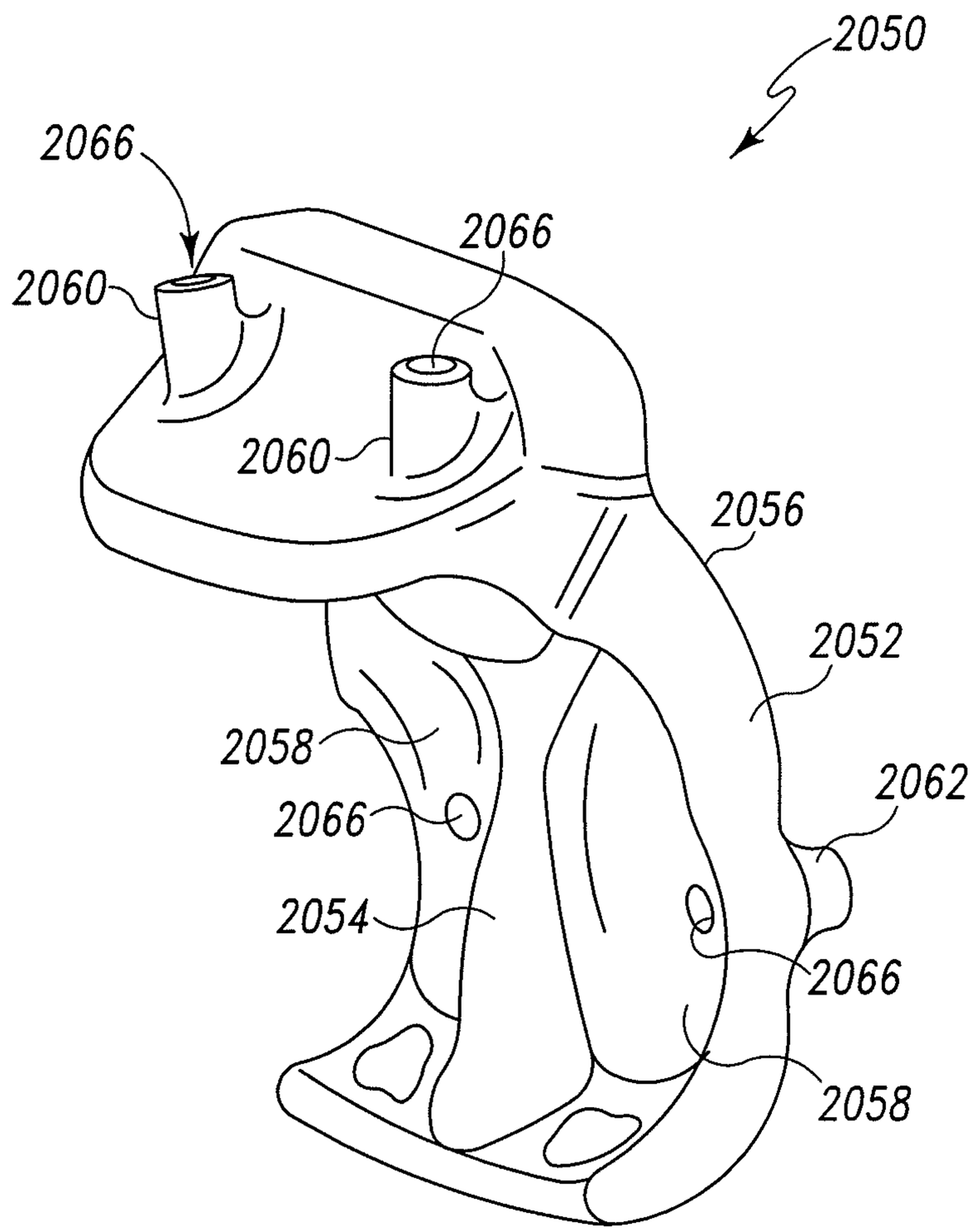
2050
2066
2066
2060
2060
2056
2052
2058
2062
2066
2054
2066
2058

Fig. 67

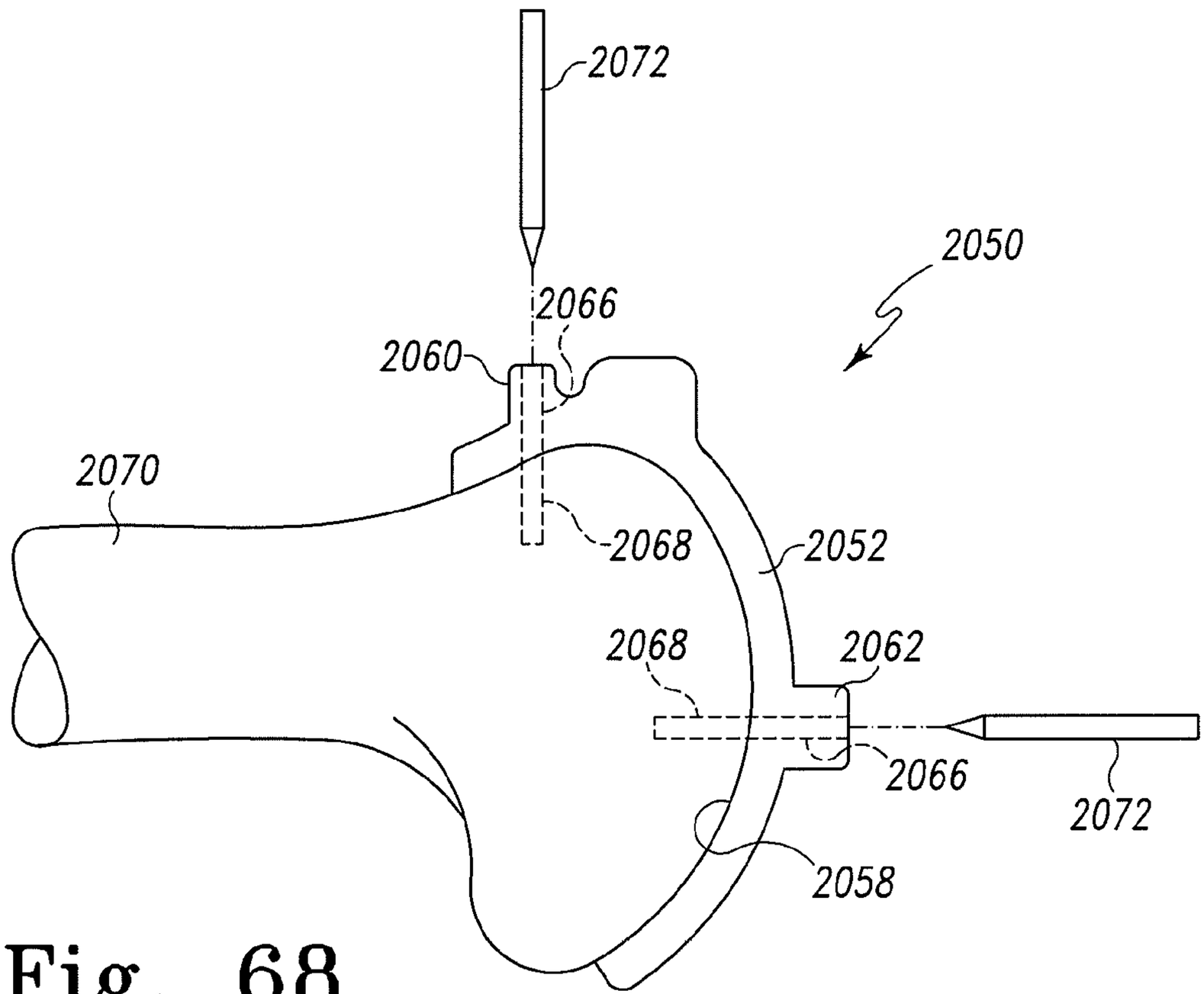
2072
2050
2066
2060
2070
2068
2052
2068
2062
2066
2072
2058

Fig. 68

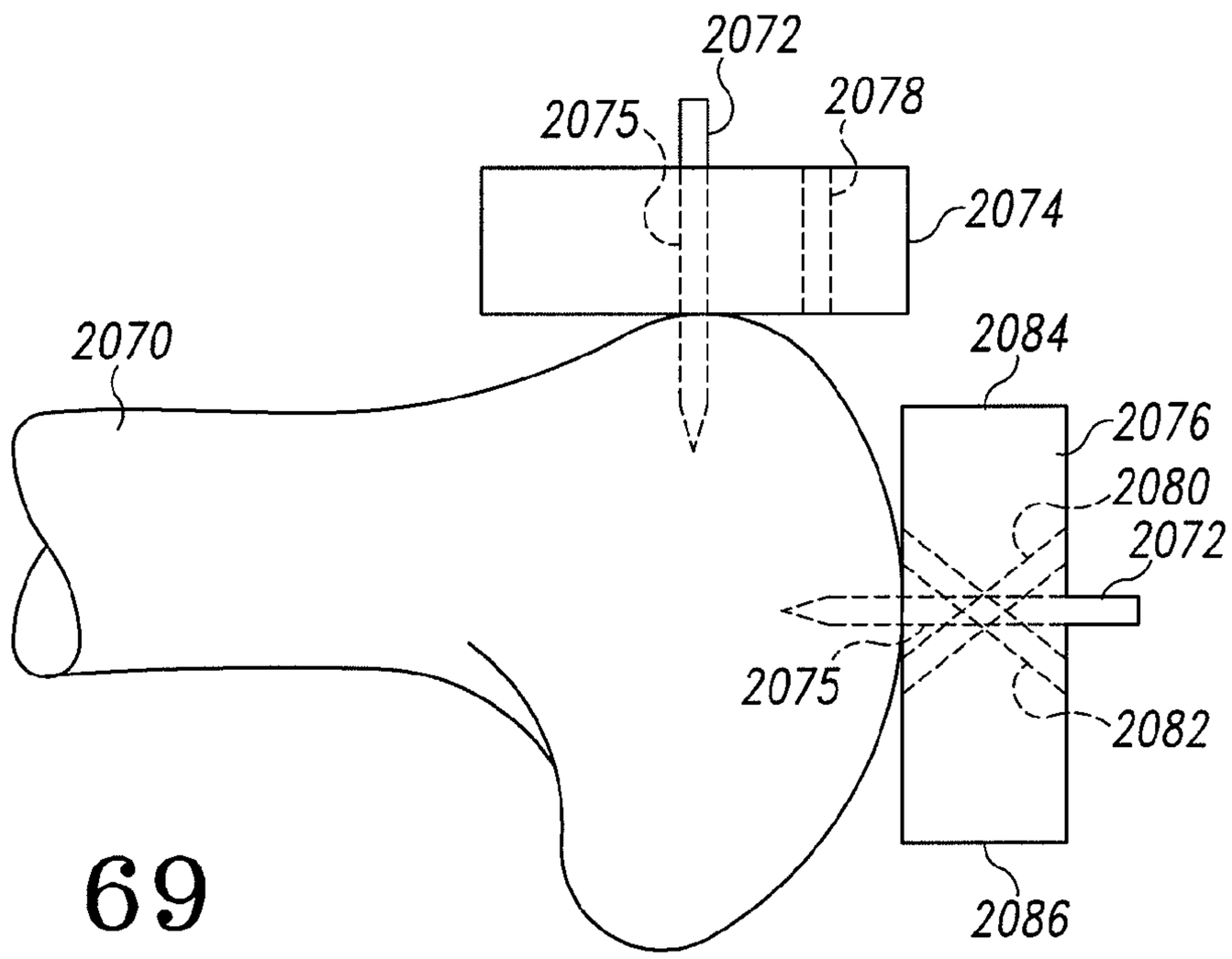
2072
2075
2078
2074
2070
2084
2076
2080
2072
2075
2082
2086

Fig. 69

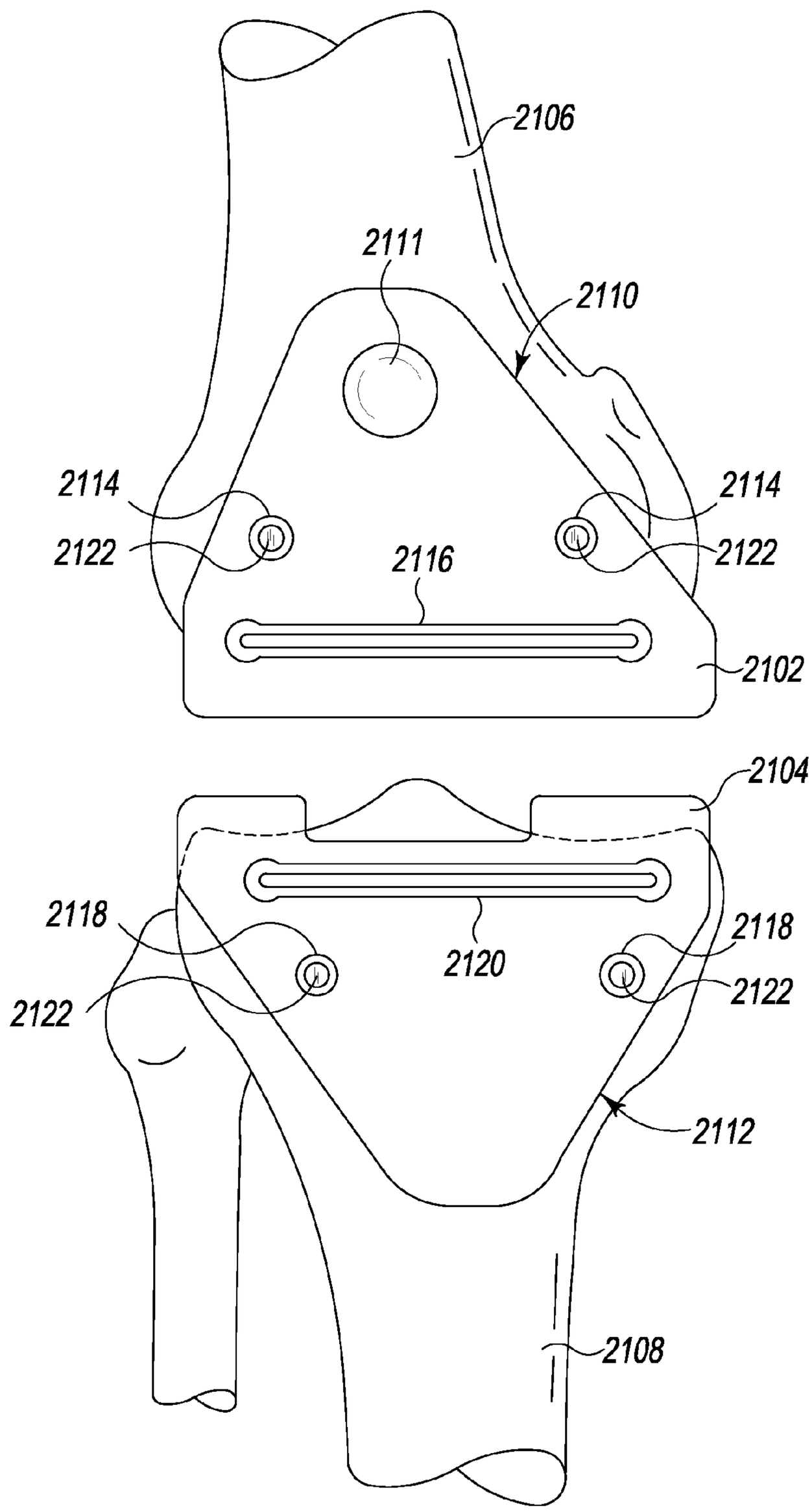
2106
2111
2110
2114
2114
2122
2122
2116
2102
2104
2118
2118
2120
2122
2122
2112
2108

Fig. 70

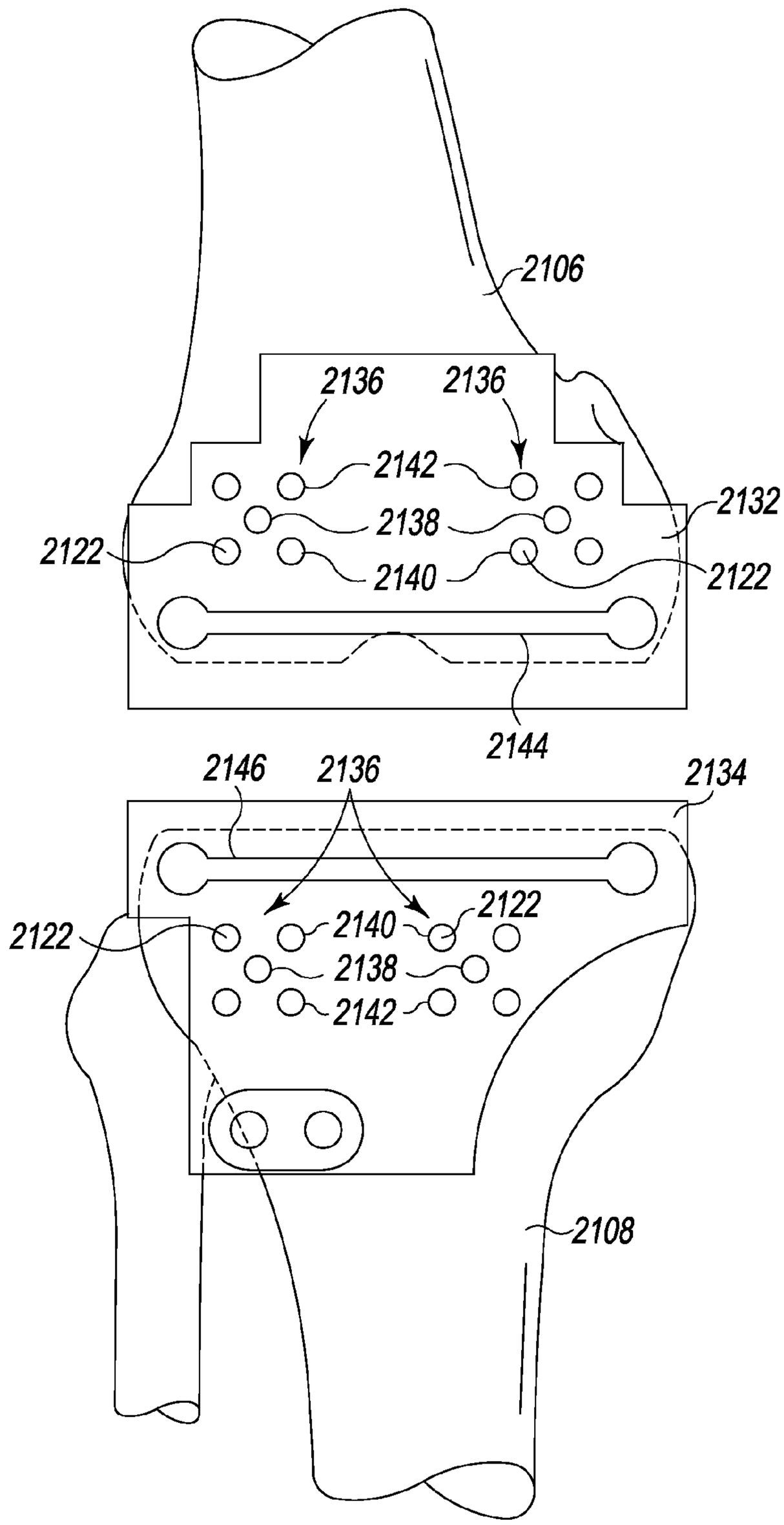
2106
2136
2136
2142
2138
2132
2122
2140
2122
2144
2146
2136
2134
2122
2140
2122
2138
2142
2108

Fig. 71

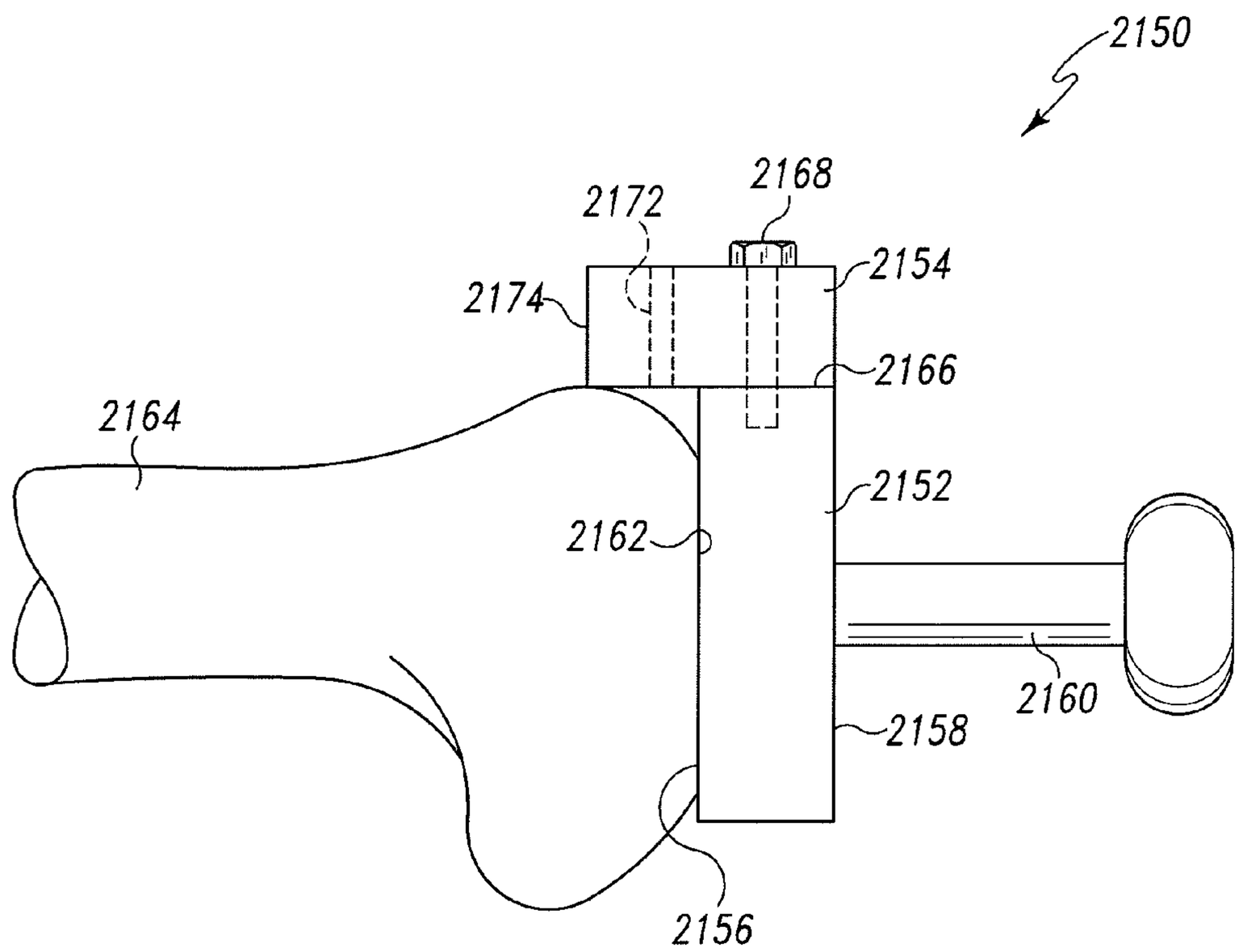

Fig. 72

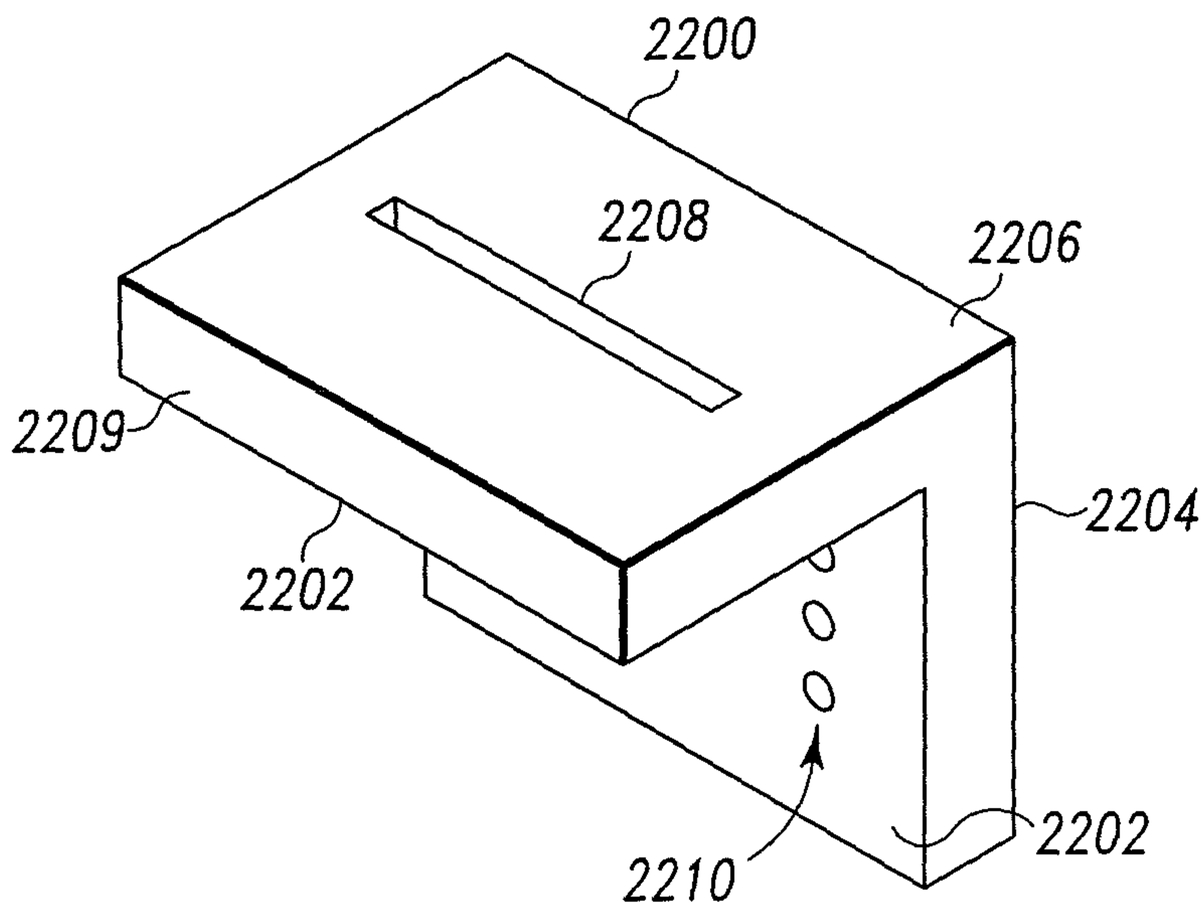
2200
2208
2206
2209
2204
2202
2210
2202

Fig. 73

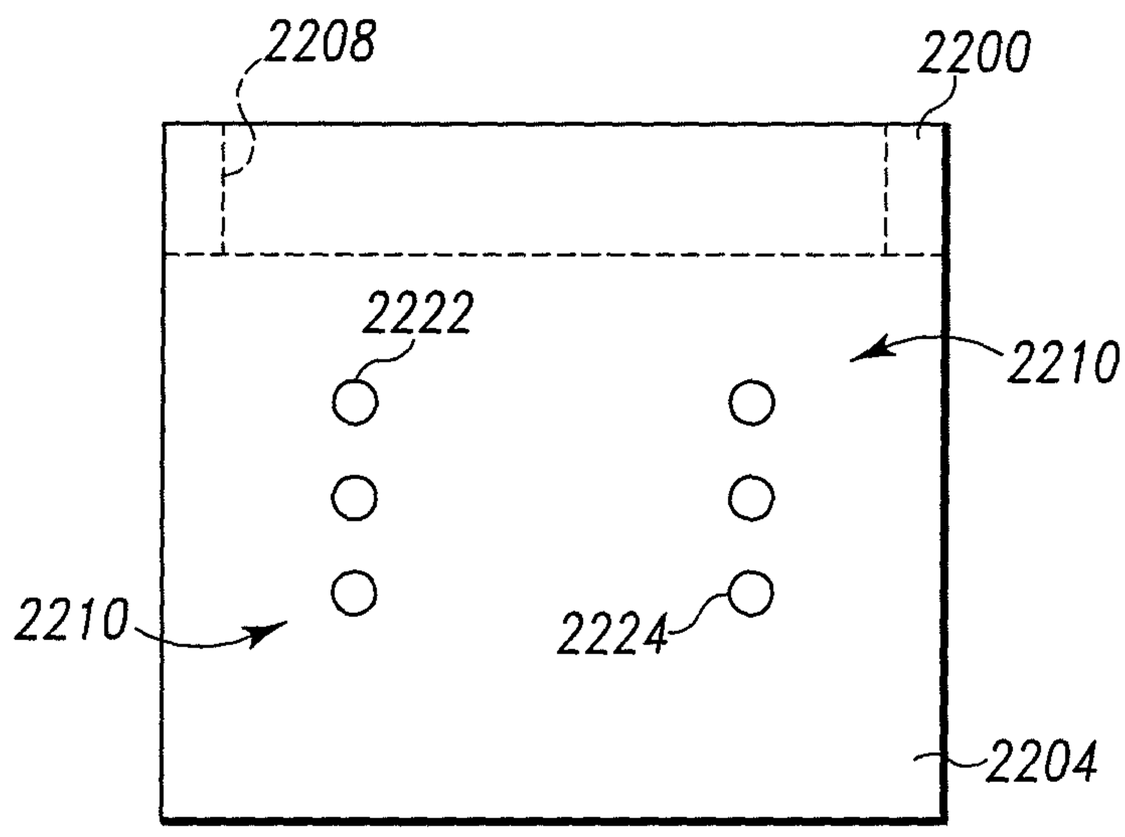
2208
2200
2222
2210
2210
2224
2204

Fig. 74

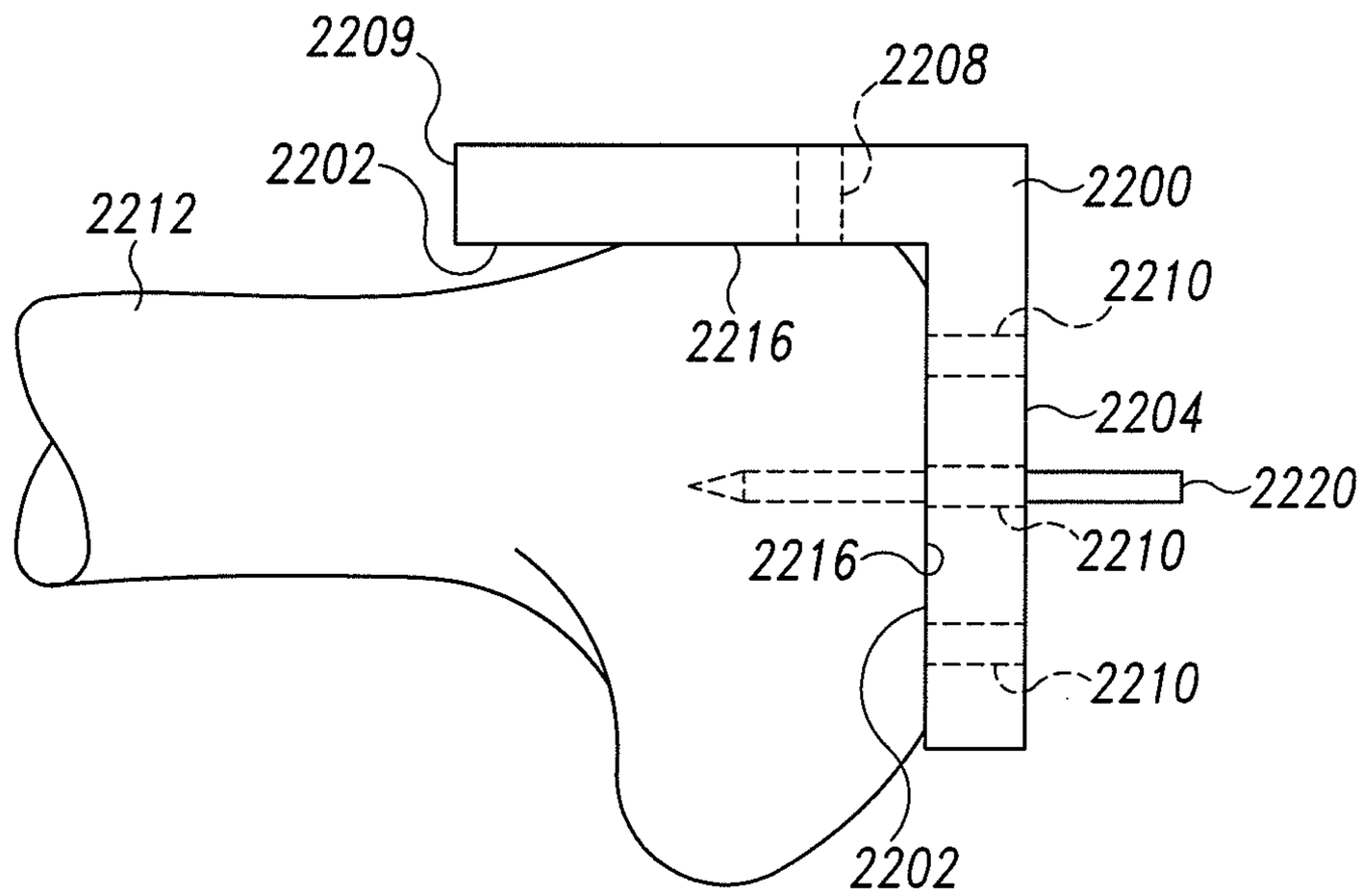
2209
2208
2202
2200
2212
2210
2216
2204
2220
2216
2210
2210
2202

Fig. 75

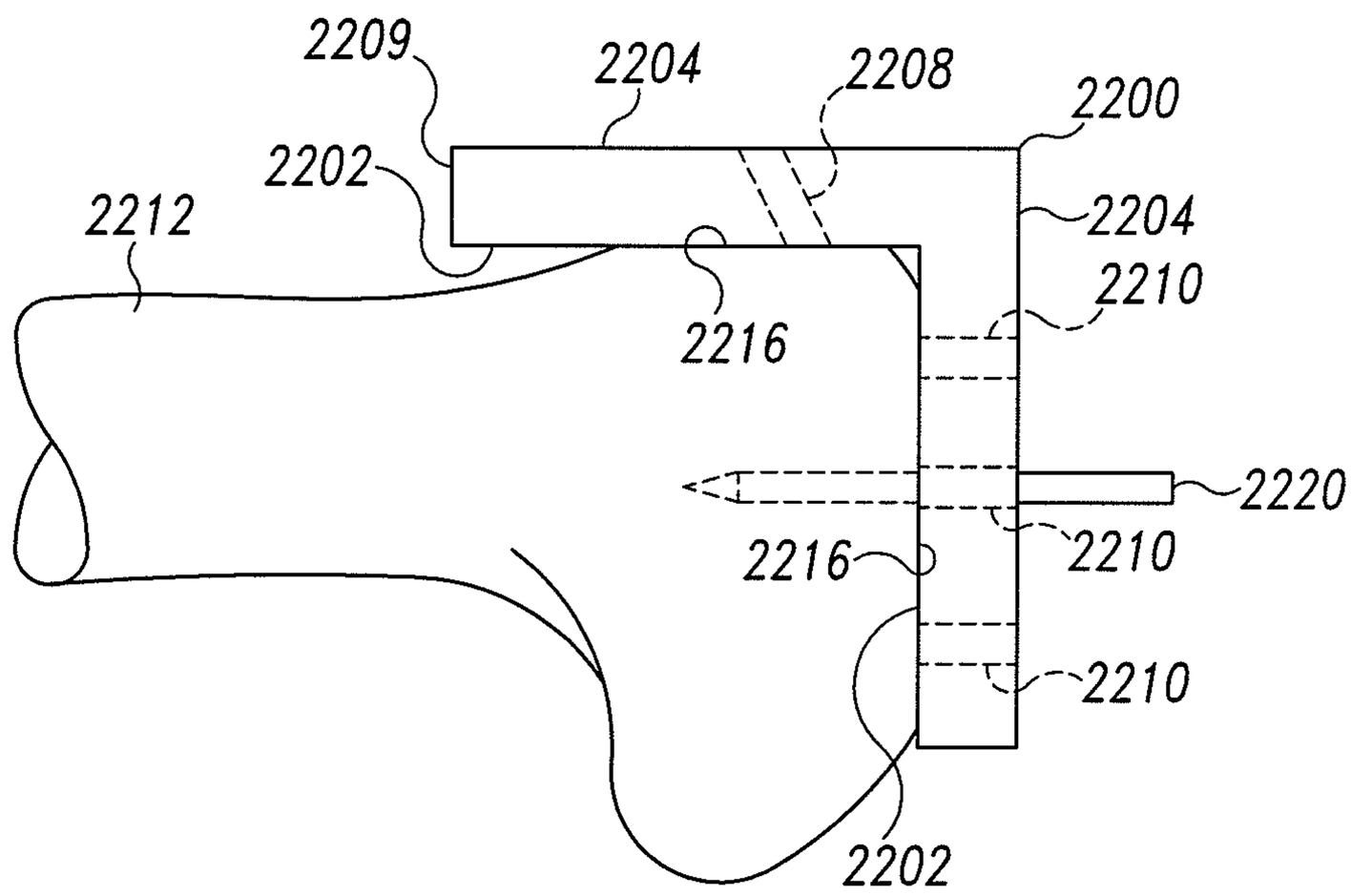
2209
2204
2208
2200
2202
2204
2212
2210
2216
2220
2216
2210
2210
2202

Fig. 76

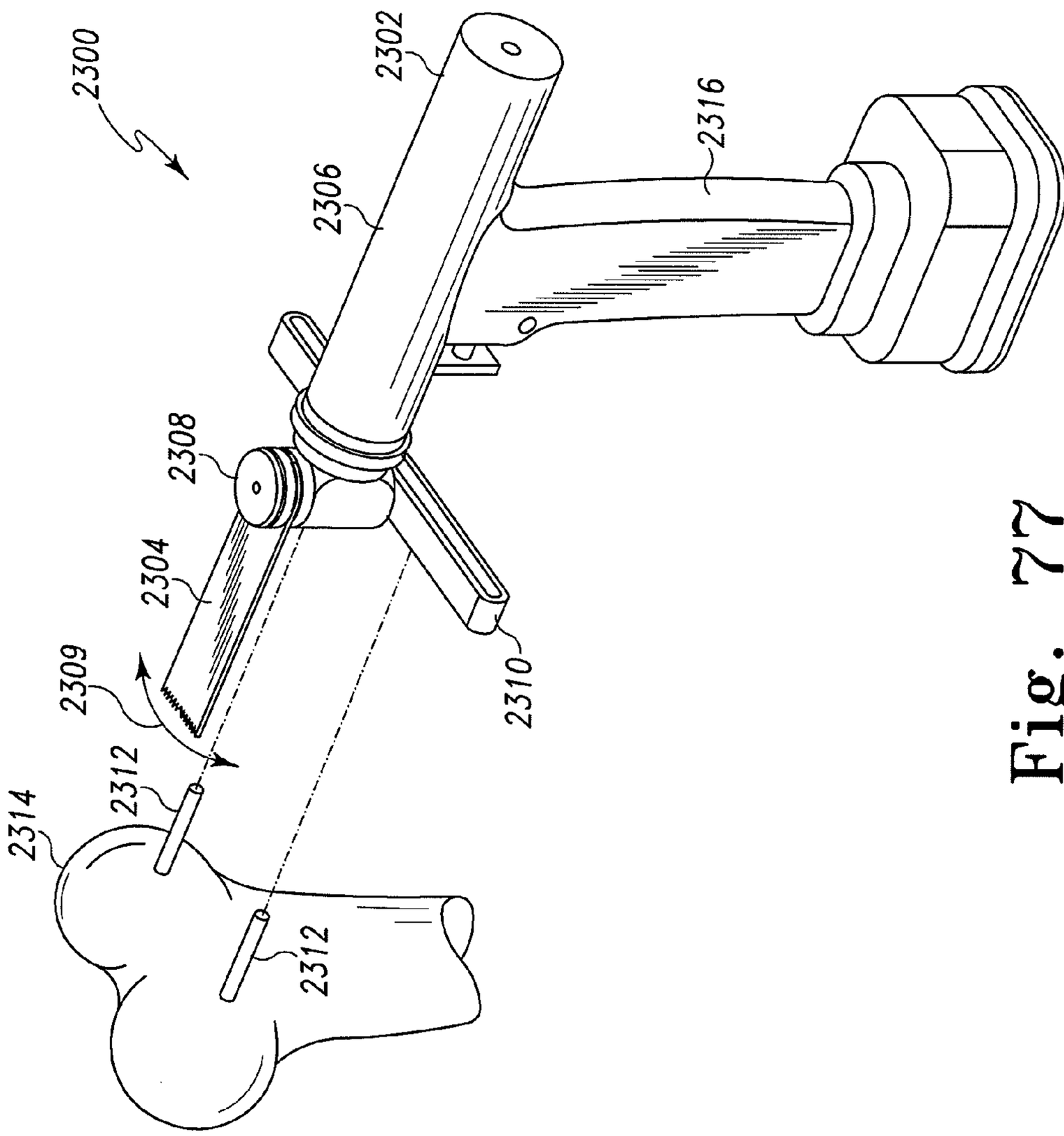

Fig. 77

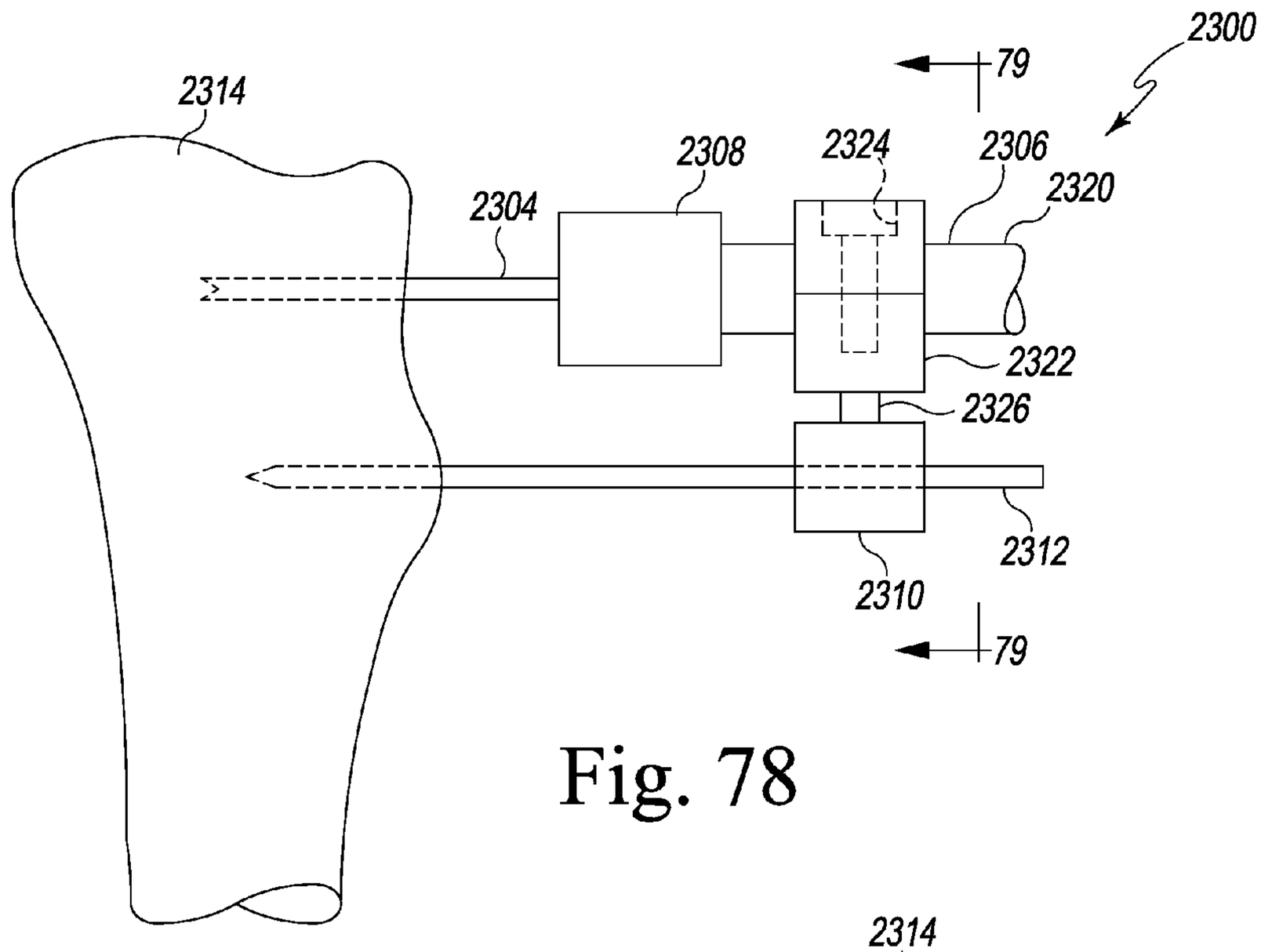
2300
79
2314
2308
2324
2306
2320
2304
2322
2326
2312
2310
79

Fig. 78

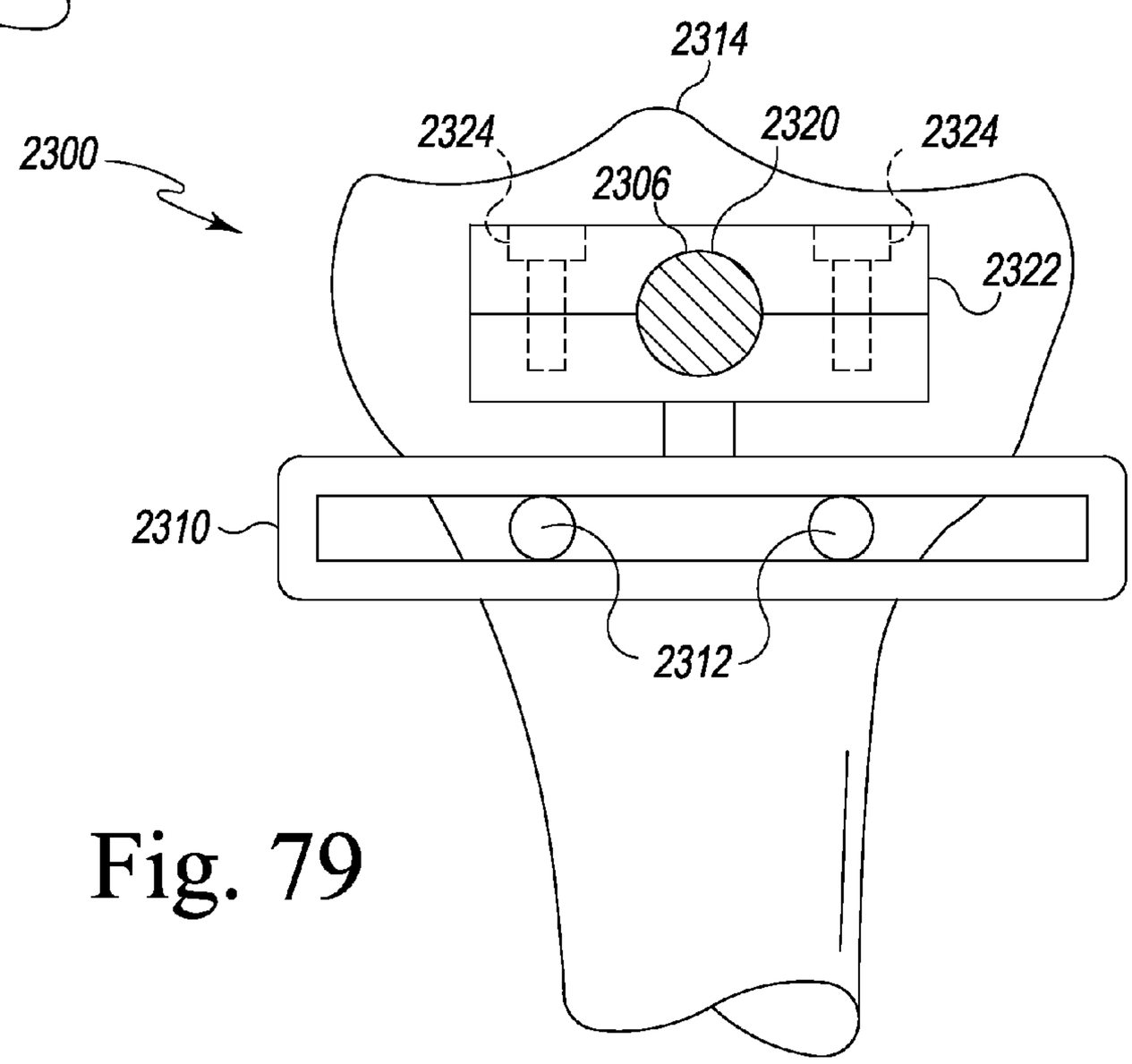
2314
2300
2324
2320
2324
2306
2322
2310
2312

Fig. 79

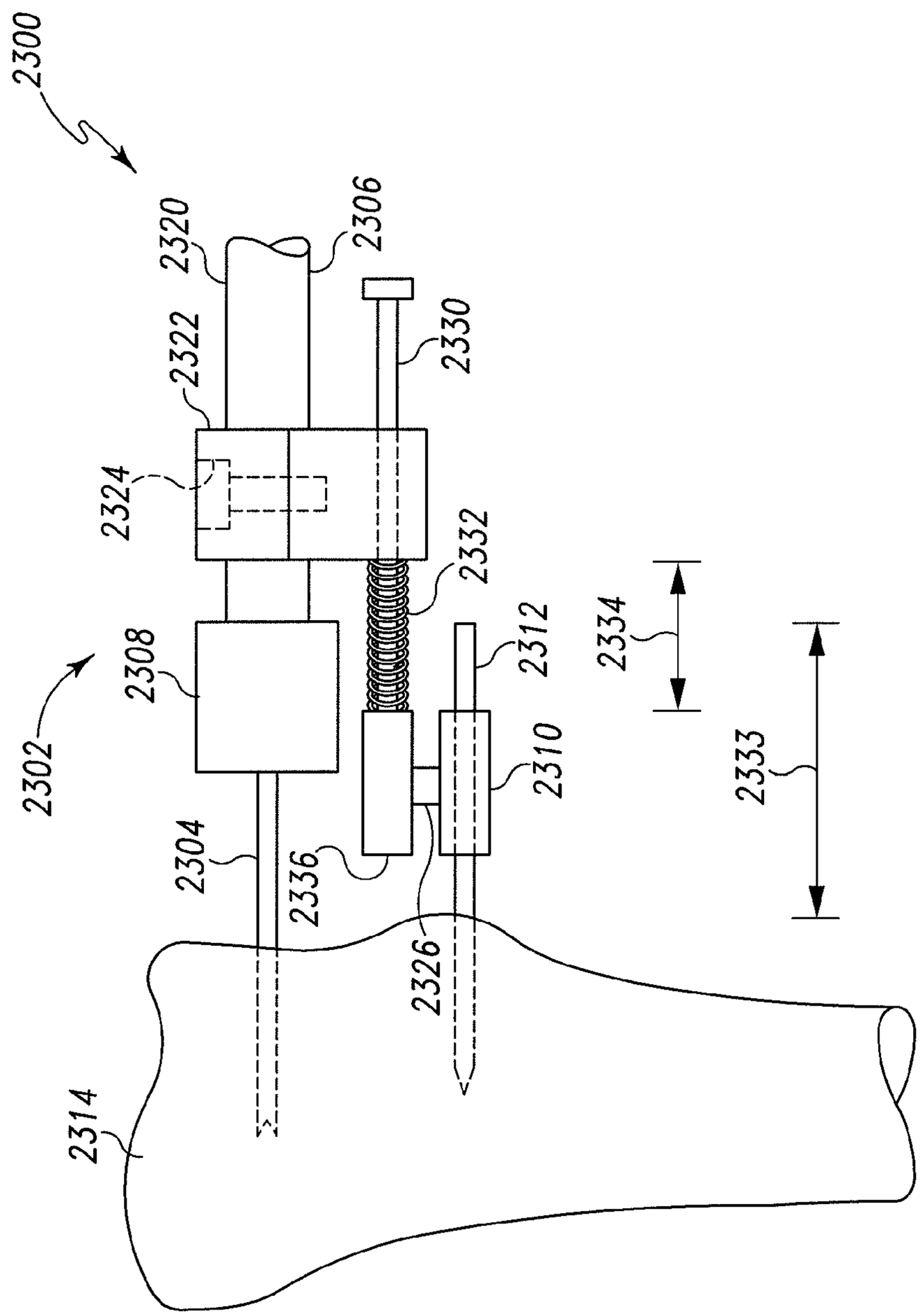
2300
2320
2306
2322
2330
2324
2332
2308
2312
2334
2302
2310
2333
2304
2336
2326
2314

Fig. 80

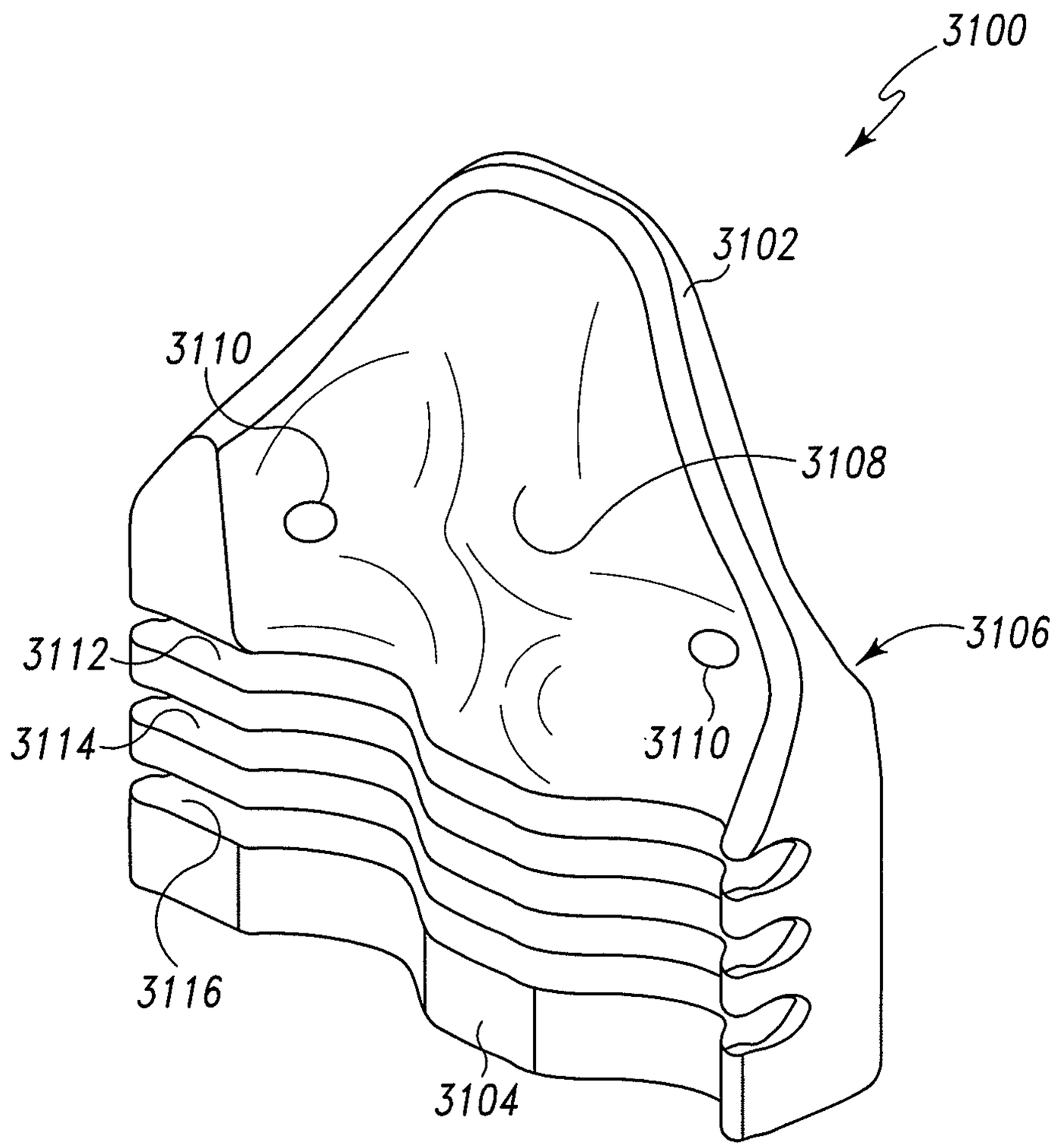

Fig. 81

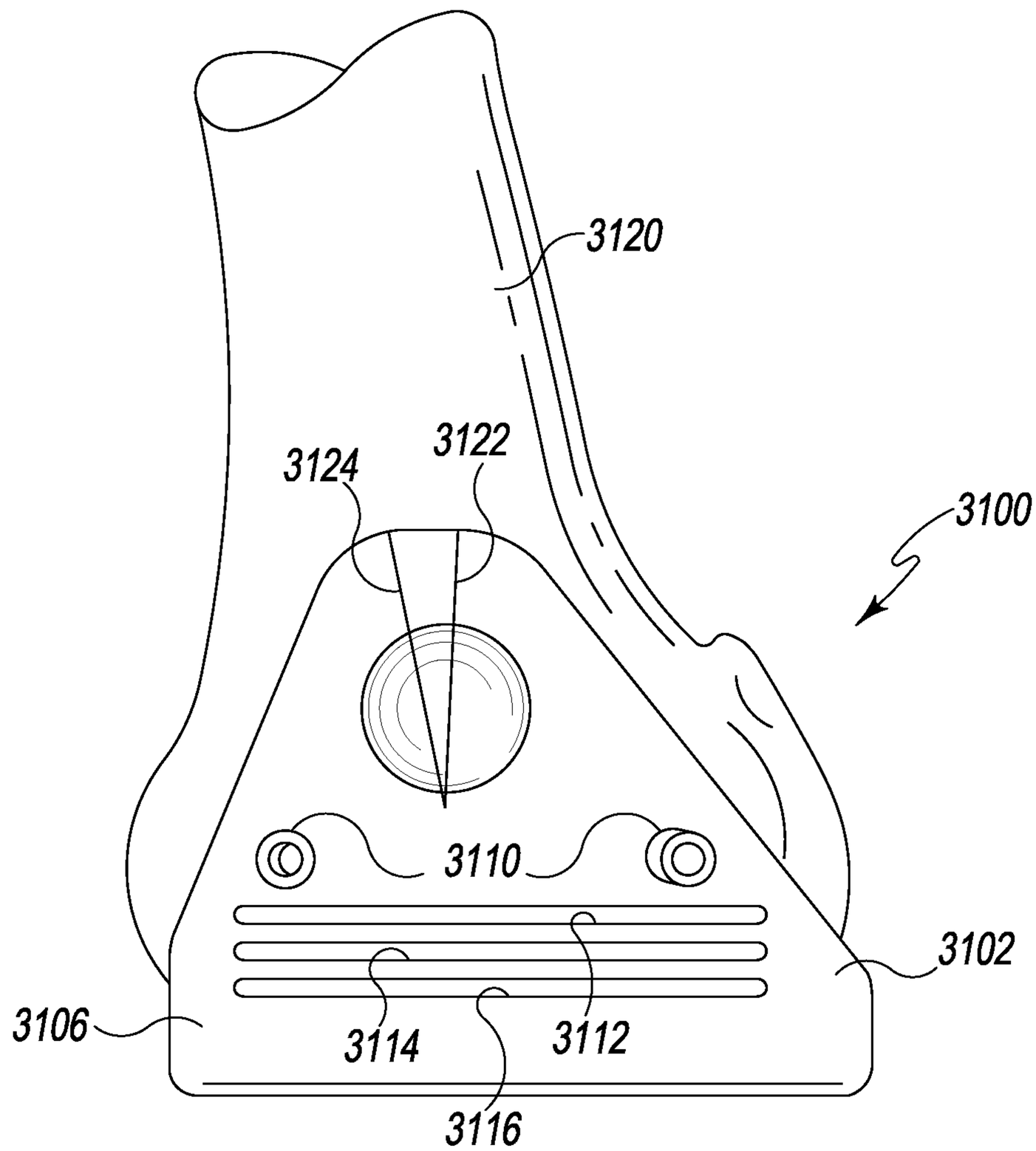

Fig. 82

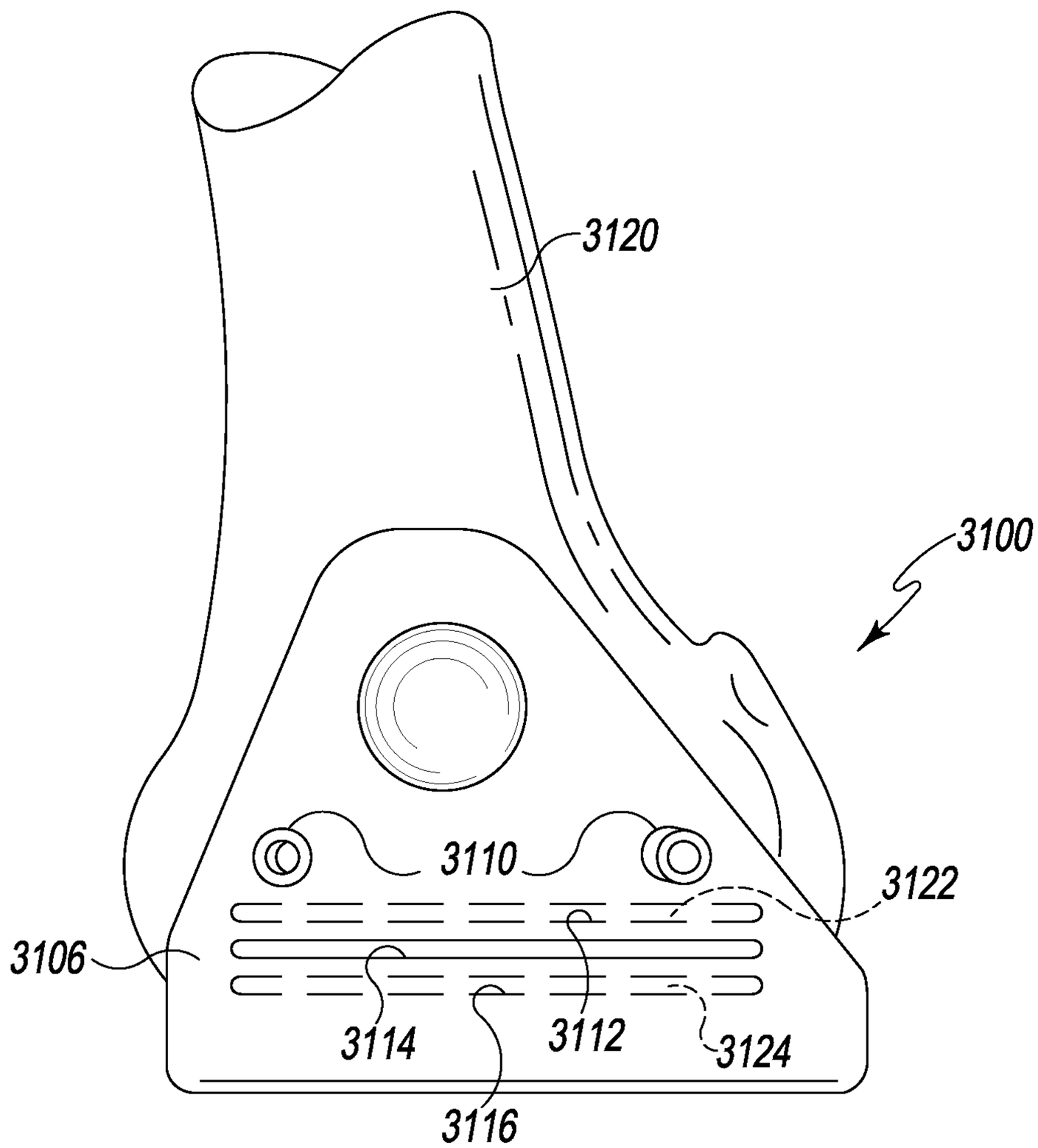

Fig. 83

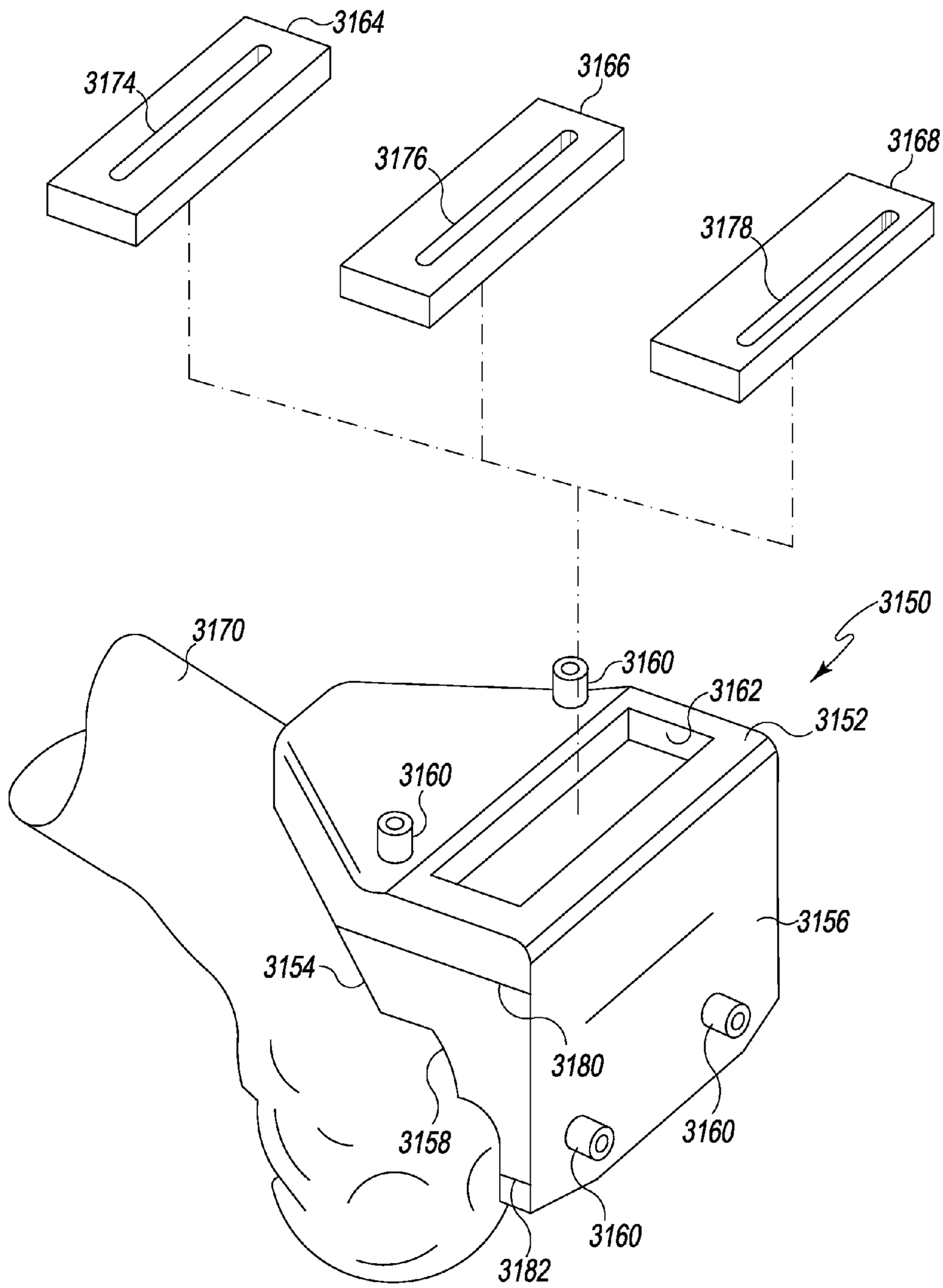
3164
3174
3166
3176
3168
3178
3150
3170
3160
3162
3152
3160
3156
3154
3180
3158
3160
3160
3182

Fig. 84

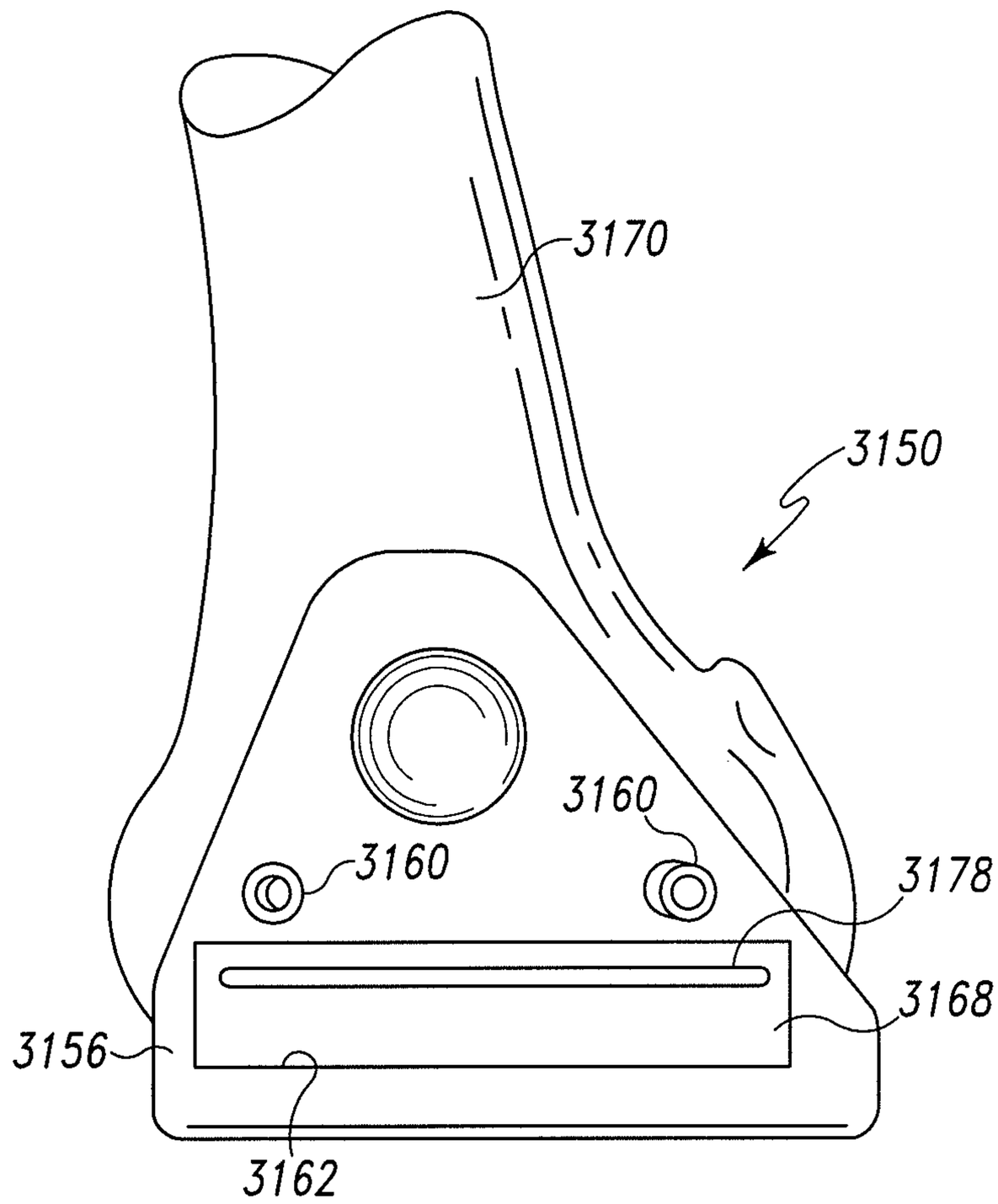

Fig. 85

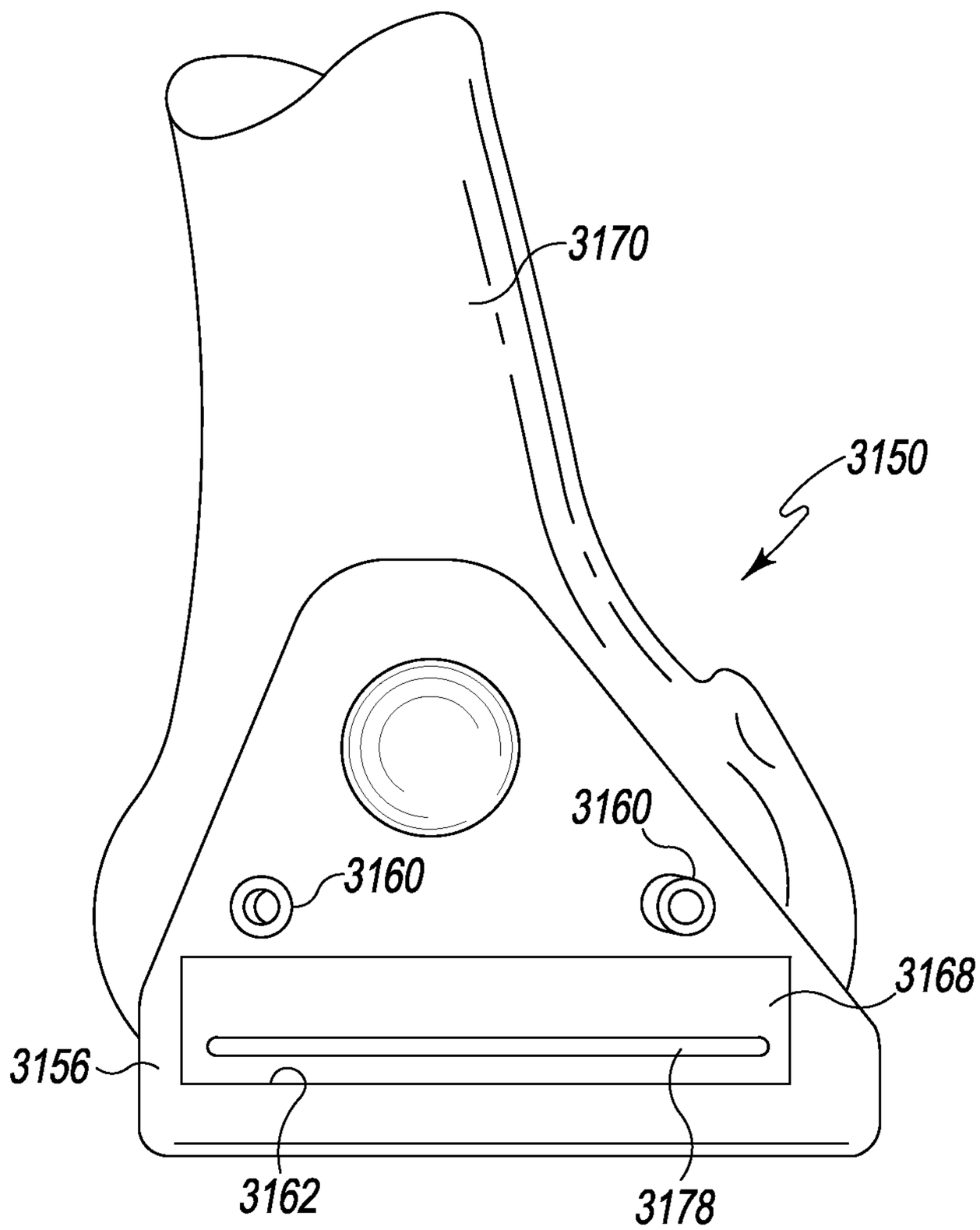

Fig. 86

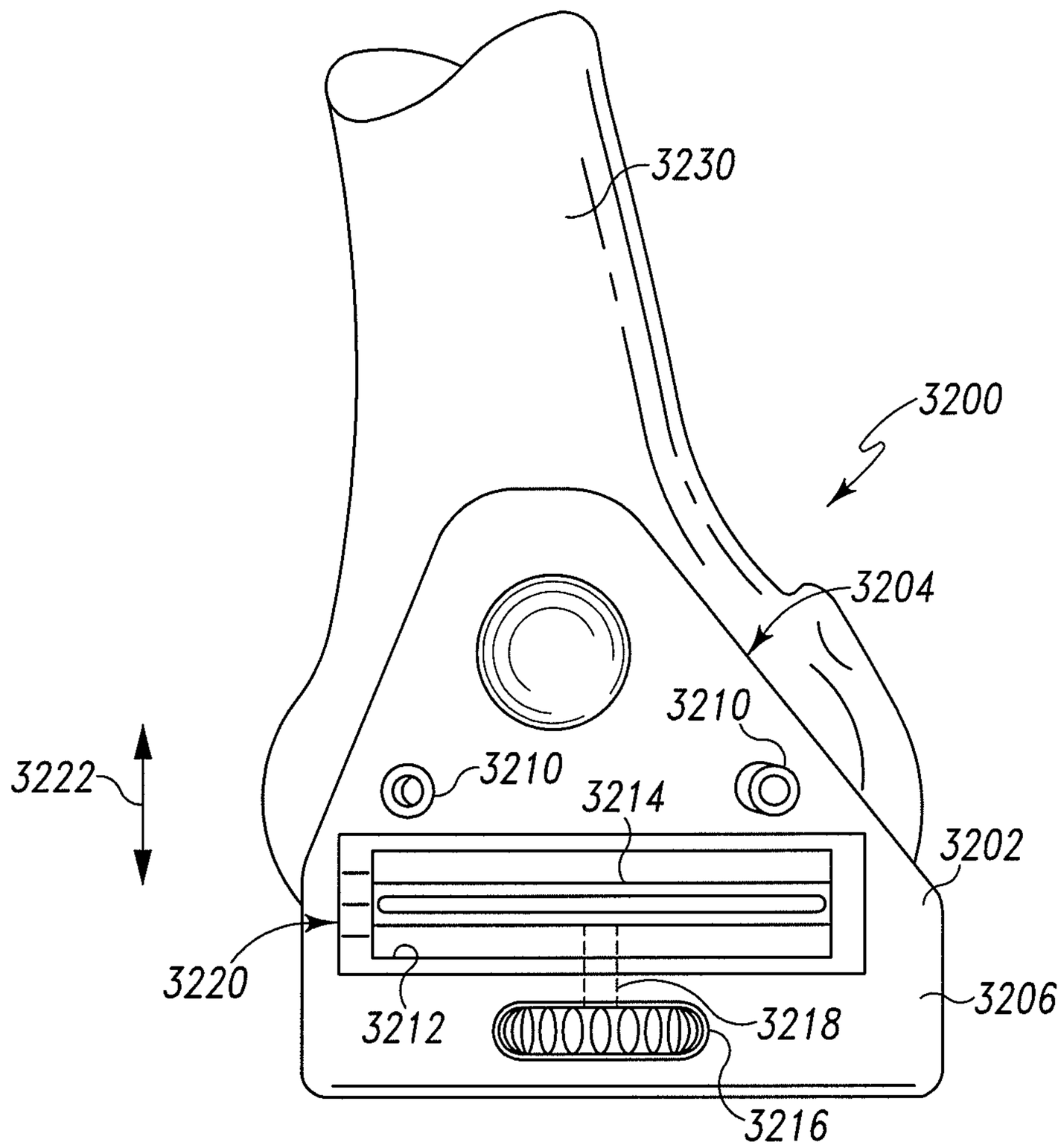
3230
3200
3204
3210
3210
3222
3214
3202
3220
3212
3218
3206
3216

Fig. 87

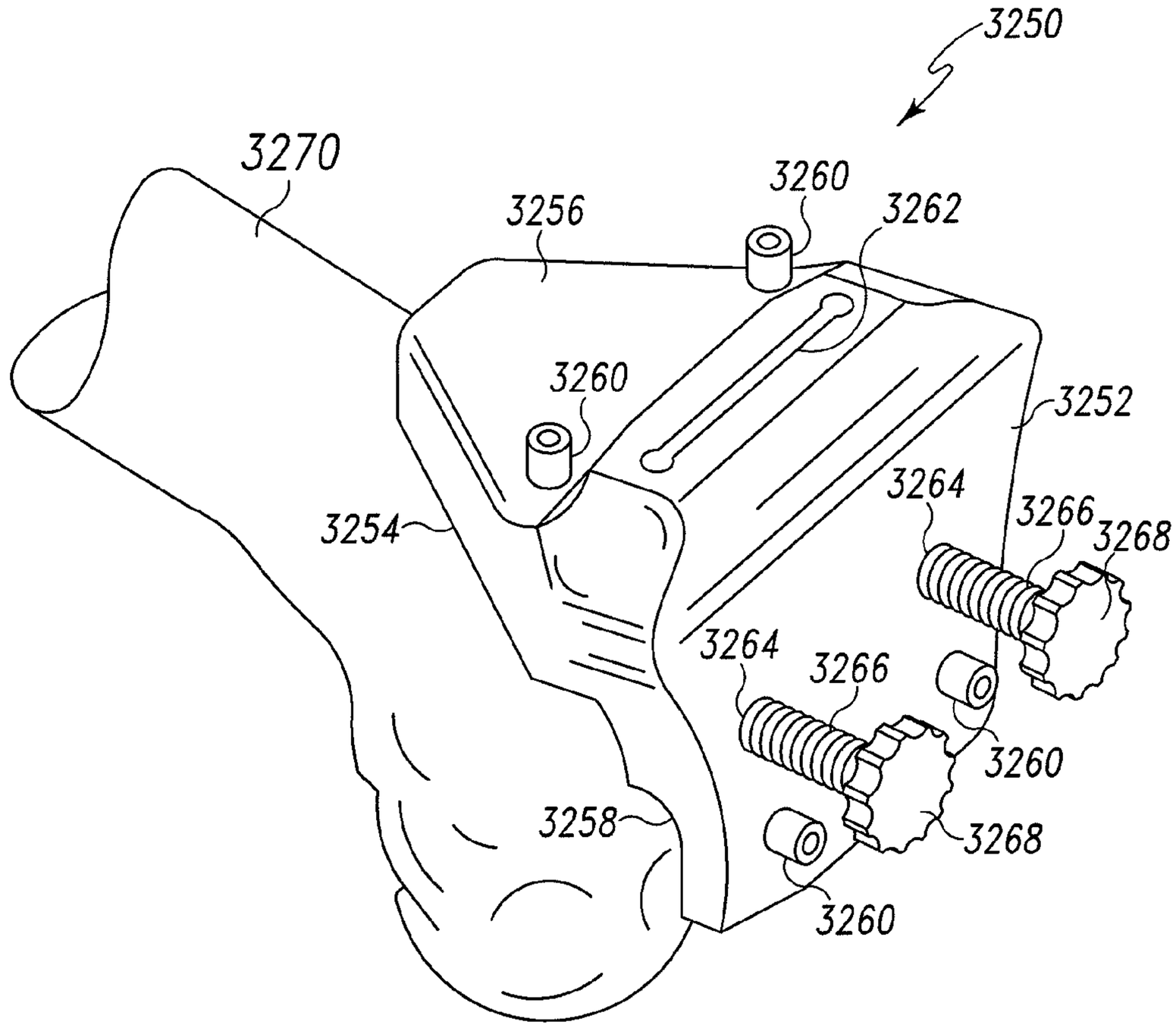
3250
3270
3256
3260
3262
3260
3252
3264
3266
3268
3254
3264
3266
3260
3258
3268
3260

Fig. 88

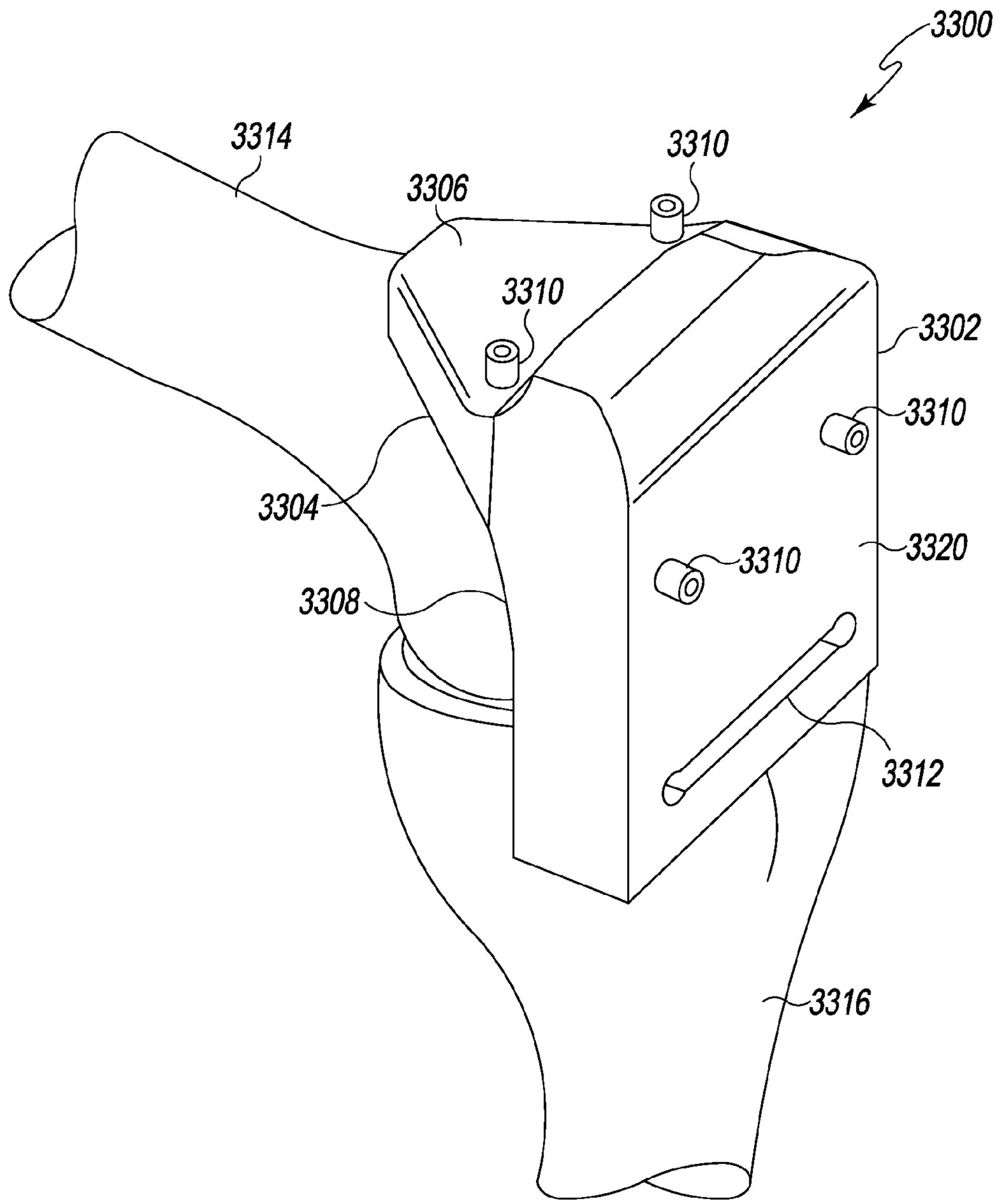
3300
3314
3310
3306
3310
3302
3310
3304
3320
3310
3308
3312
3316

Fig. 89

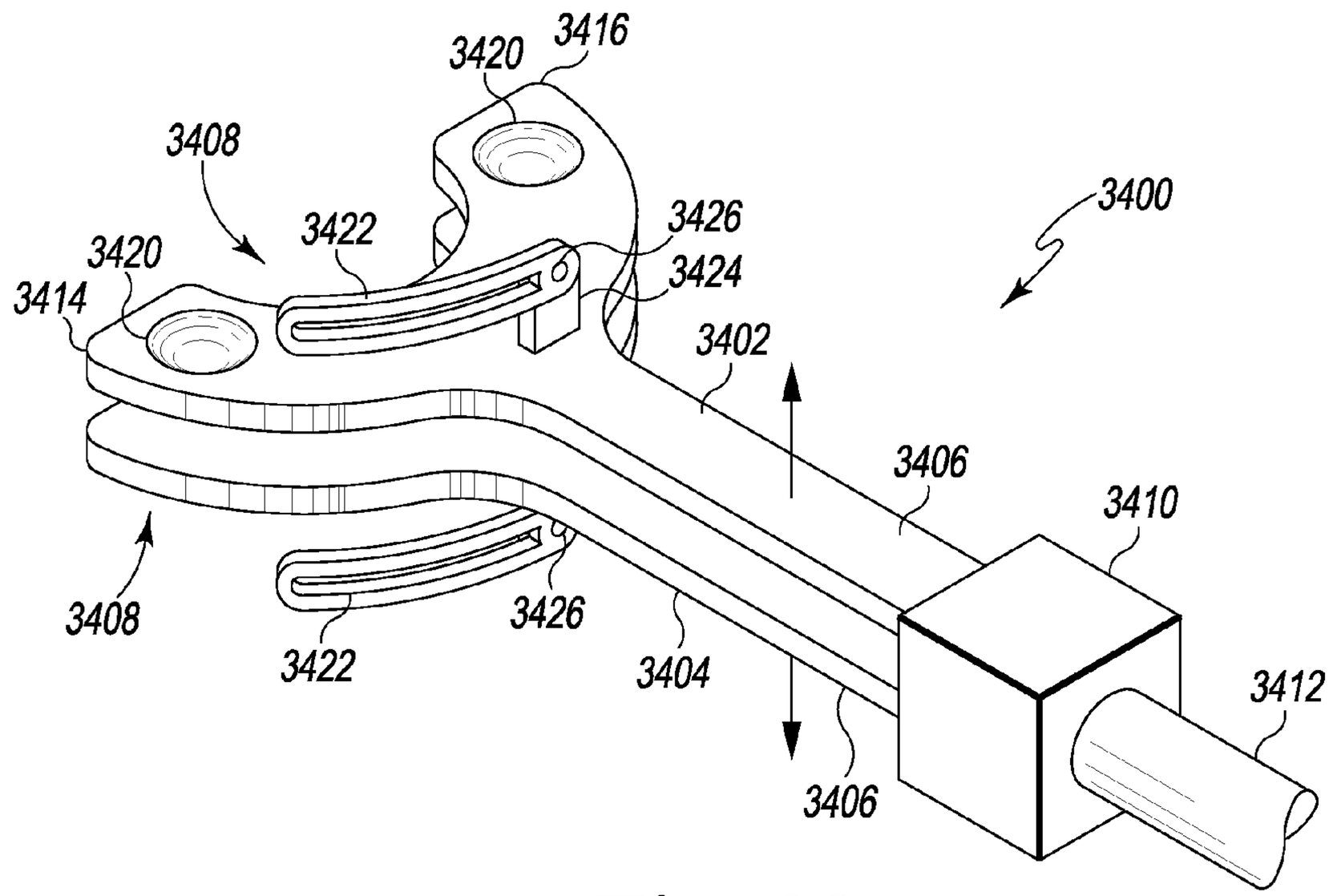
3420
3416
3408
3400
3422
3426
3420
3424
3414
3402
3406
3410
3408
3426
3422
3404
3412
3406

Fig. 90

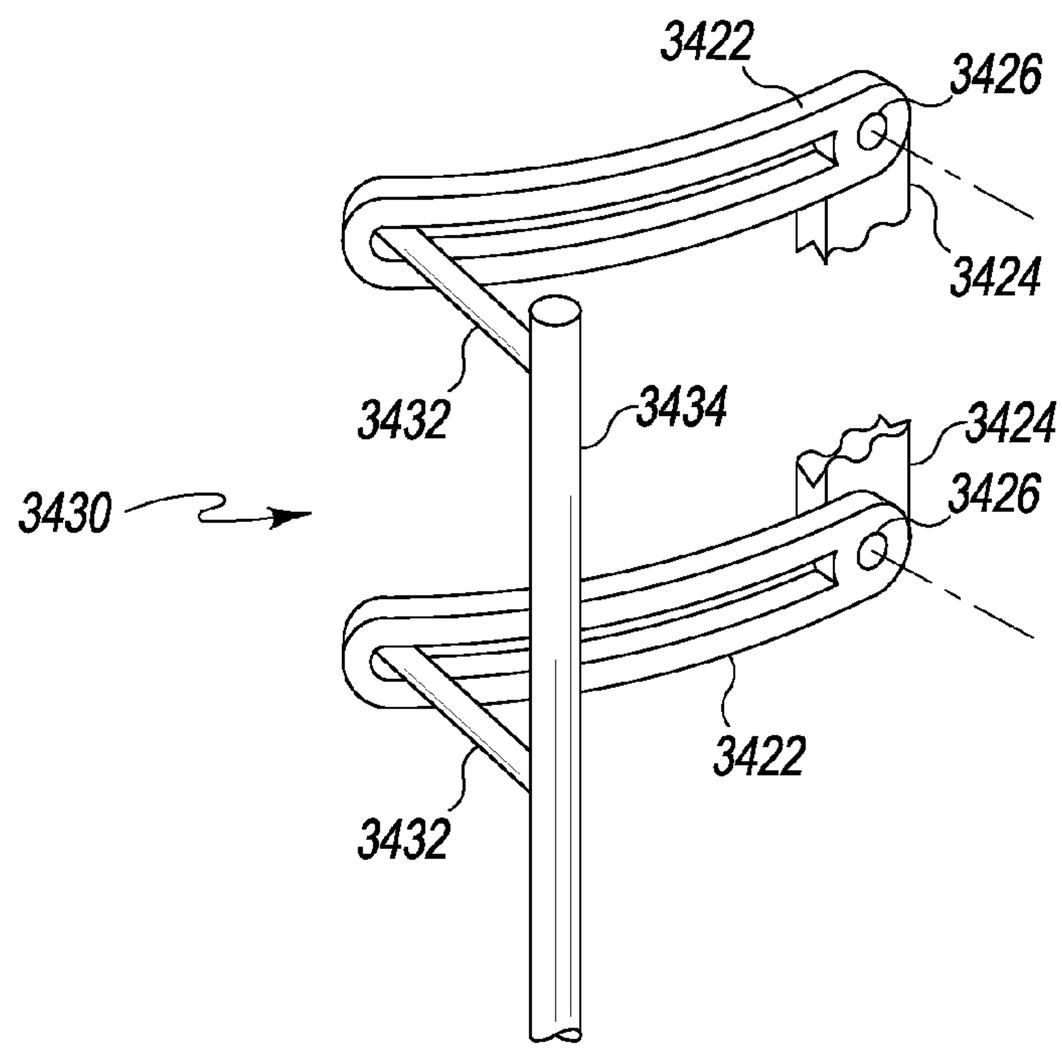
3422
3426
3424
3432
3434
3424
3430
3426
3422
3432

Fig. 91

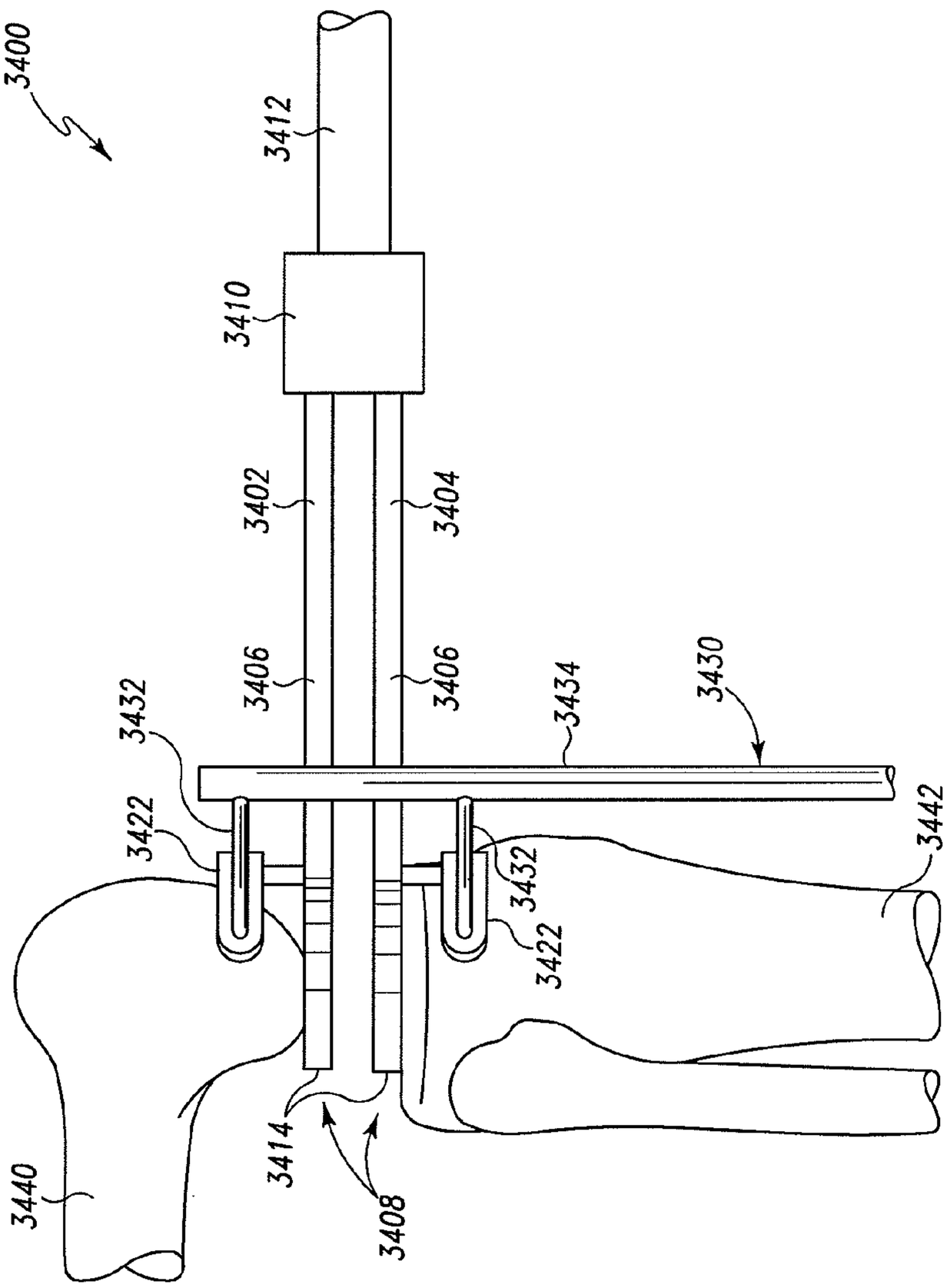
3400
3412
3410
3402
3404
3406
3406
3434
3430
3432
3422
3432
3422
3442
3414
3408
3440

Fig. 92

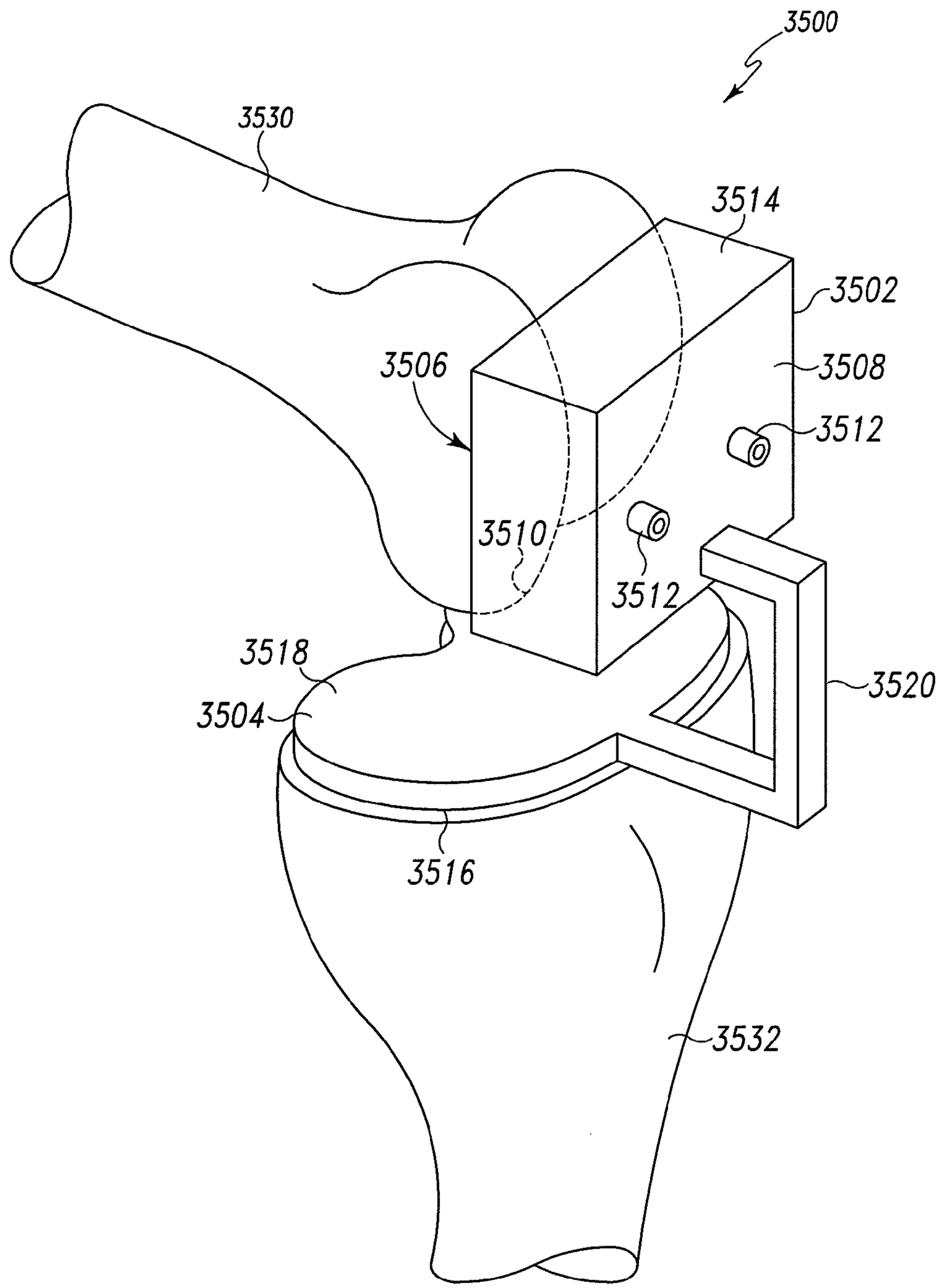
3500
3530
3514
3502
3506
3508
3512
3510
3512
3518
3520
3504
3516
3532

Fig. 93

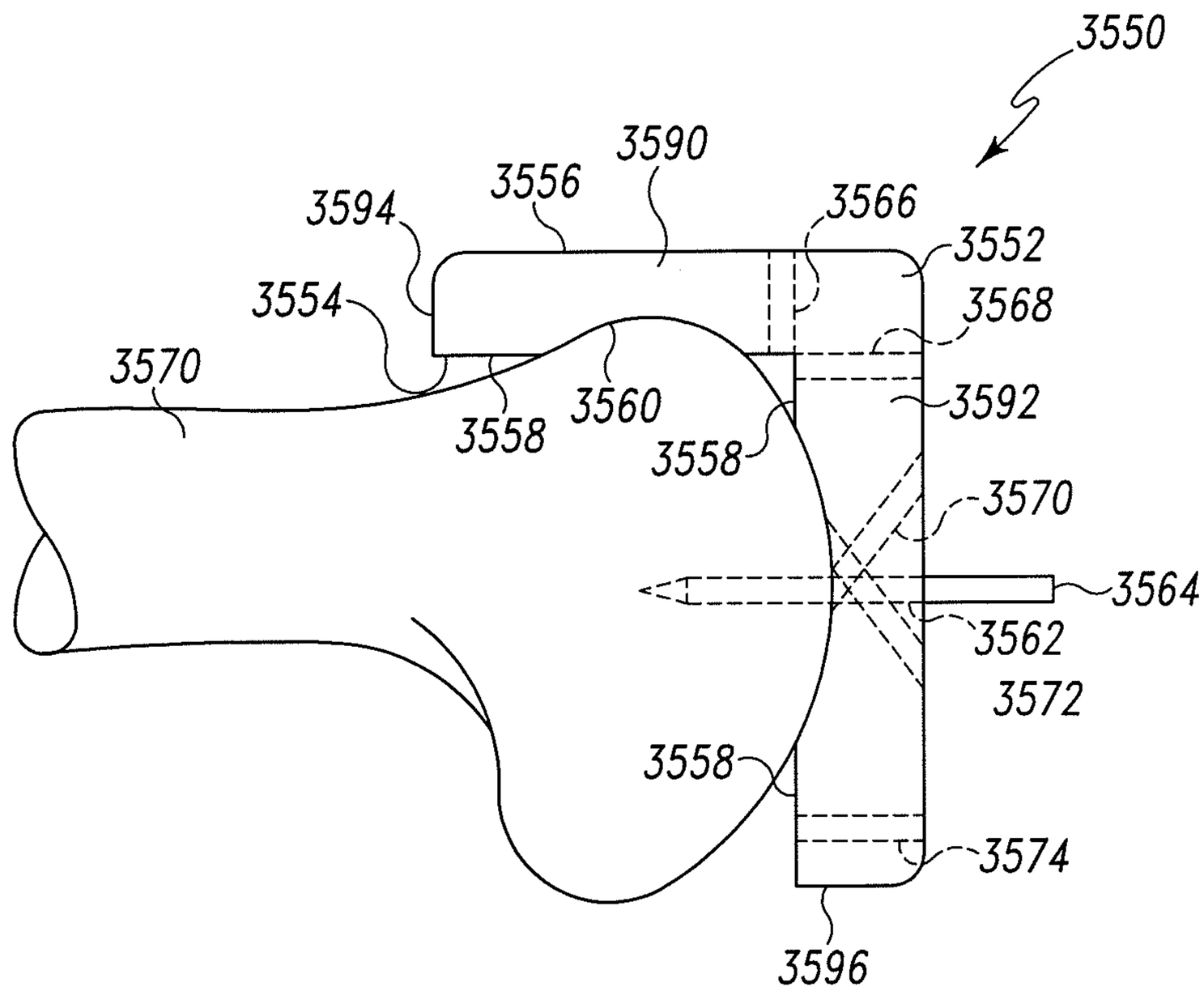
3550
3590
3556
3594
3566
3552
3568
3554
3570
3560
3558
3592
3558
3570
3564
3562
3572
3558
3574
3596

Fig. 94

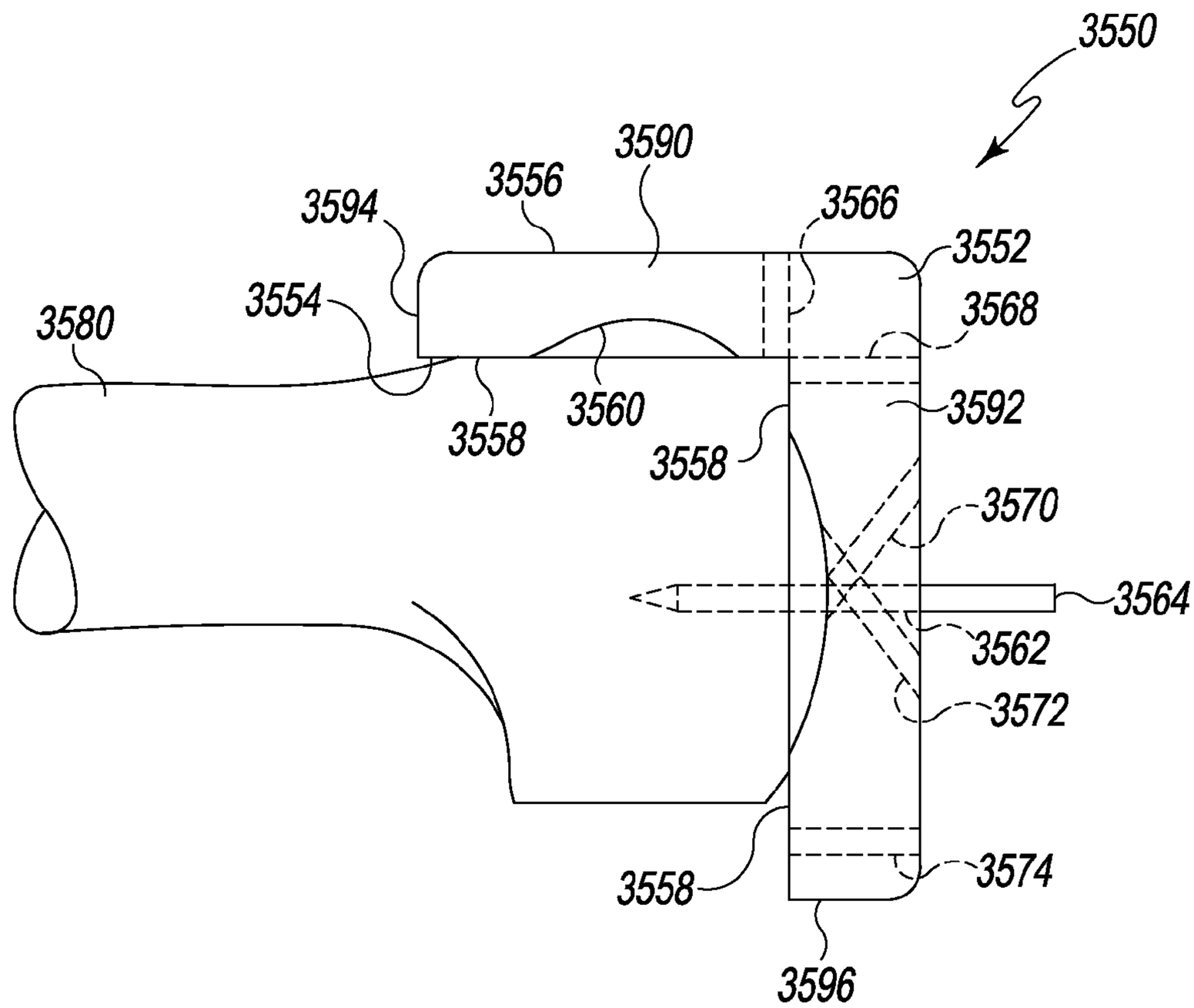
3550
3590
3556
3594
3566
3552
3554
3568
3580
3560
3592
3558
3558
3570
3564
3562
3572
3558
3574
3596

Fig. 95

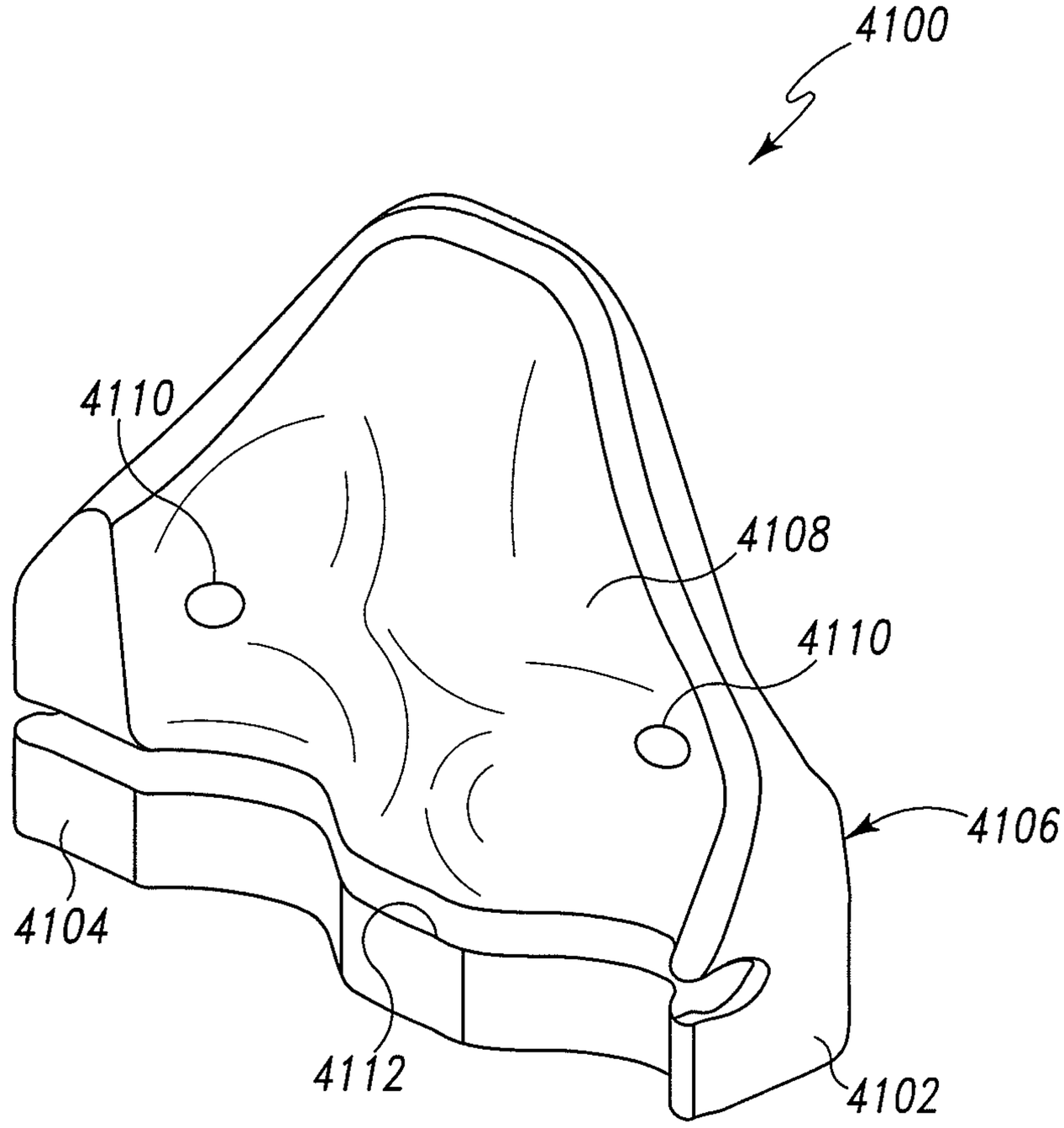

Fig. 96

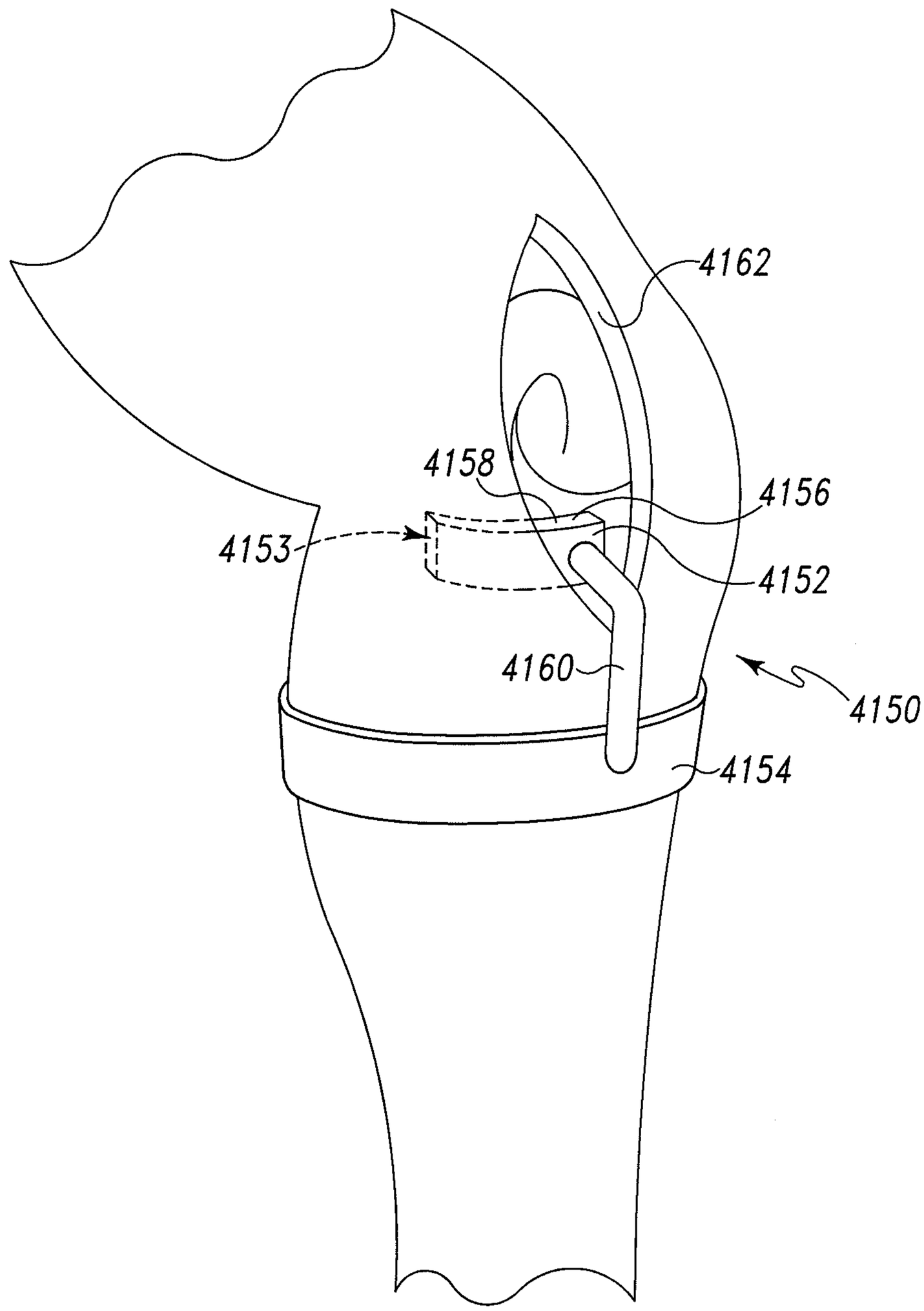

Fig. 97

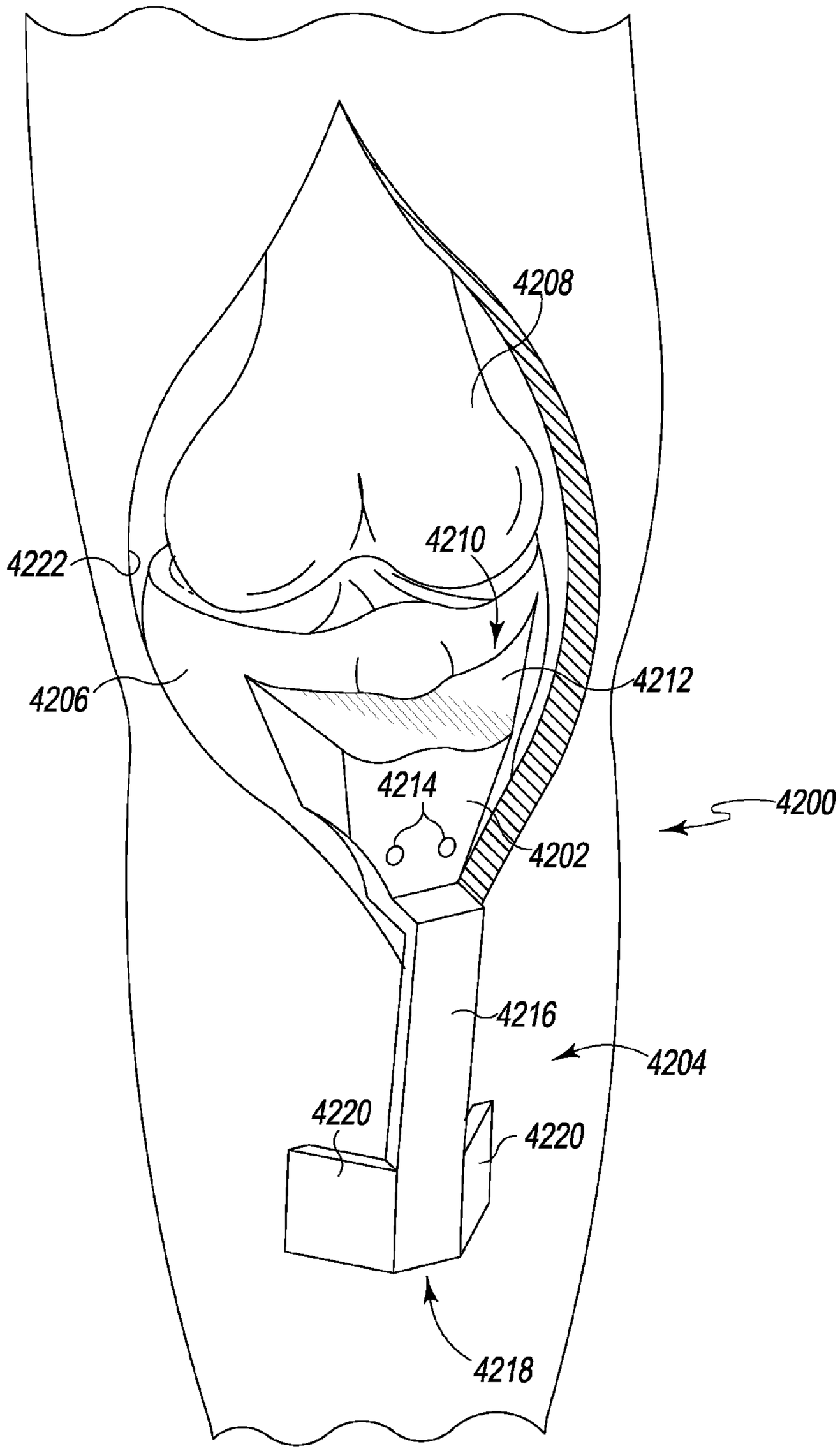
4208
4210
4222
4206
4212
4214
4200
4202
4216
4204
4220
4220
4218

Fig. 98

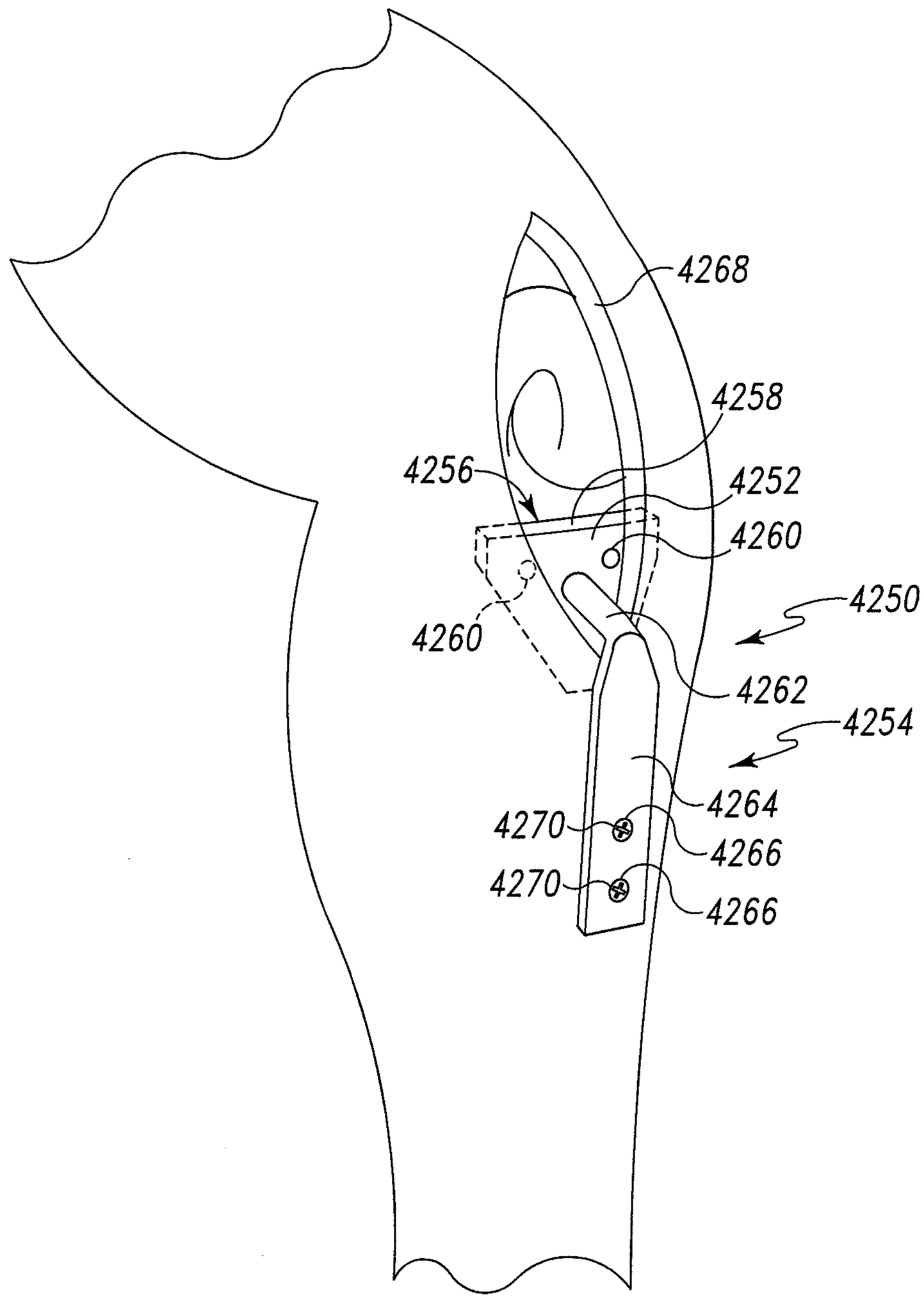
4268
4258
4256
4252
4260
4260
4250
4262
4254
4264
4270
4266
4270
4266

Fig. 99

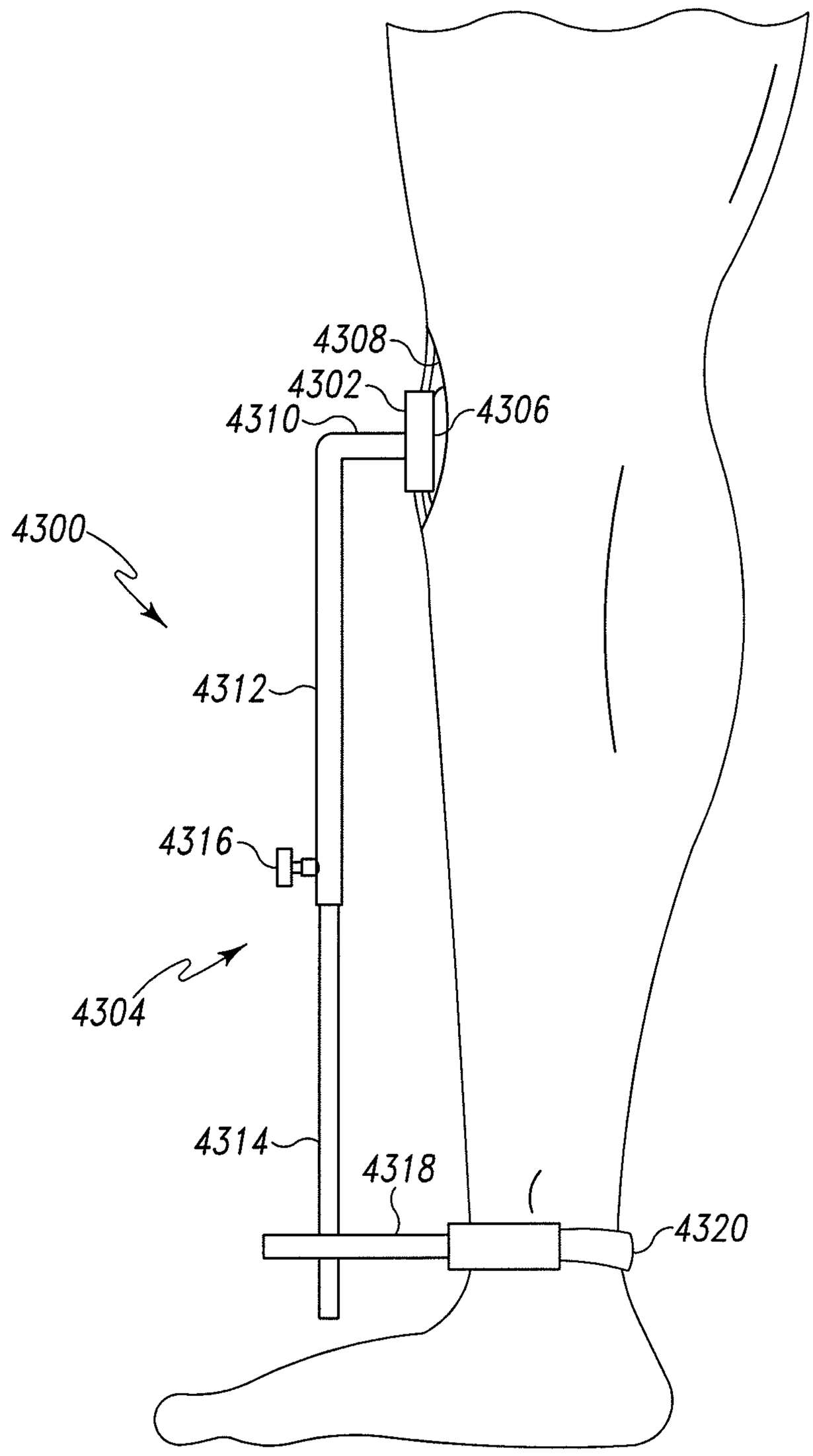

Fig. 100

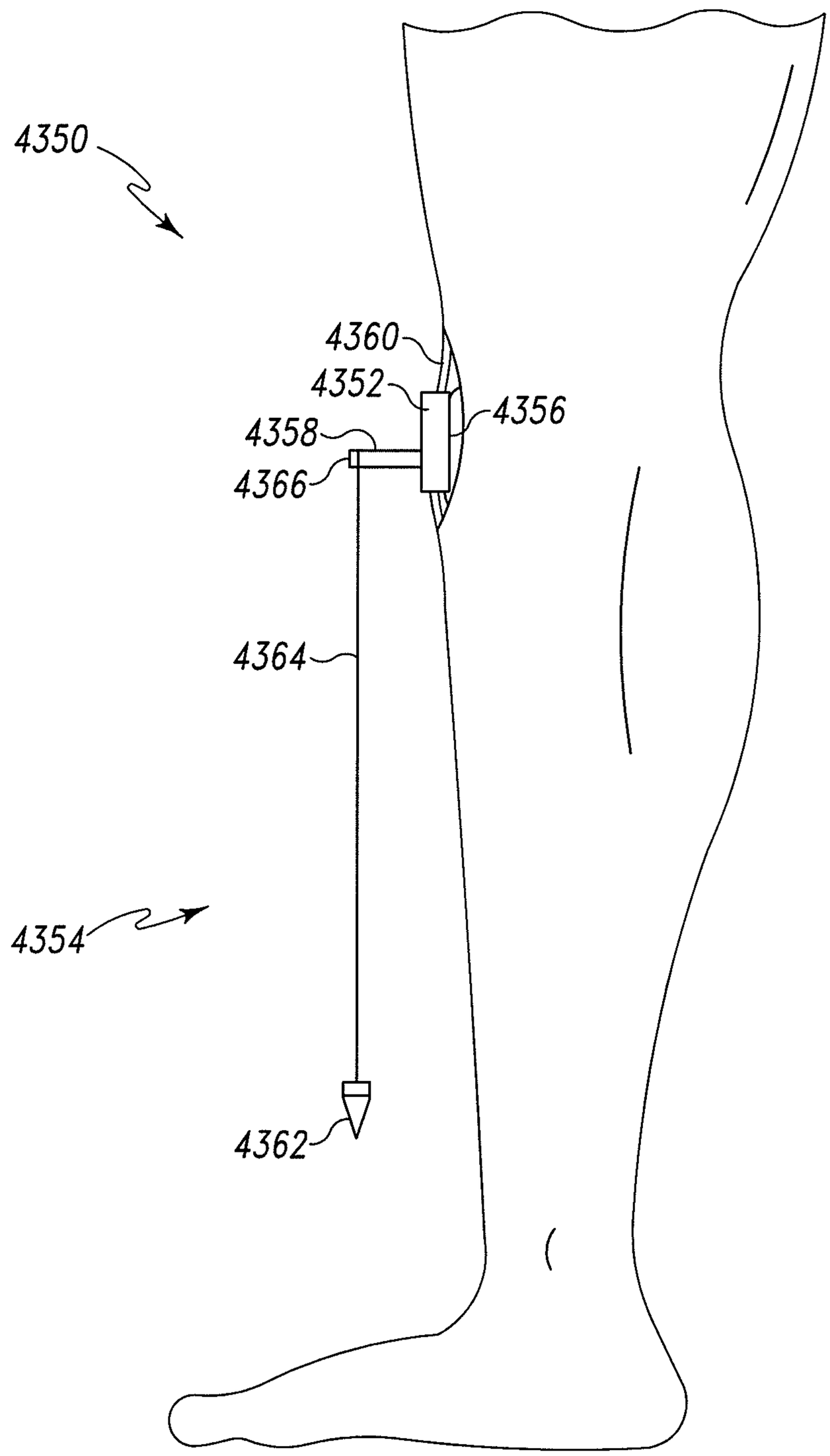

Fig. 101

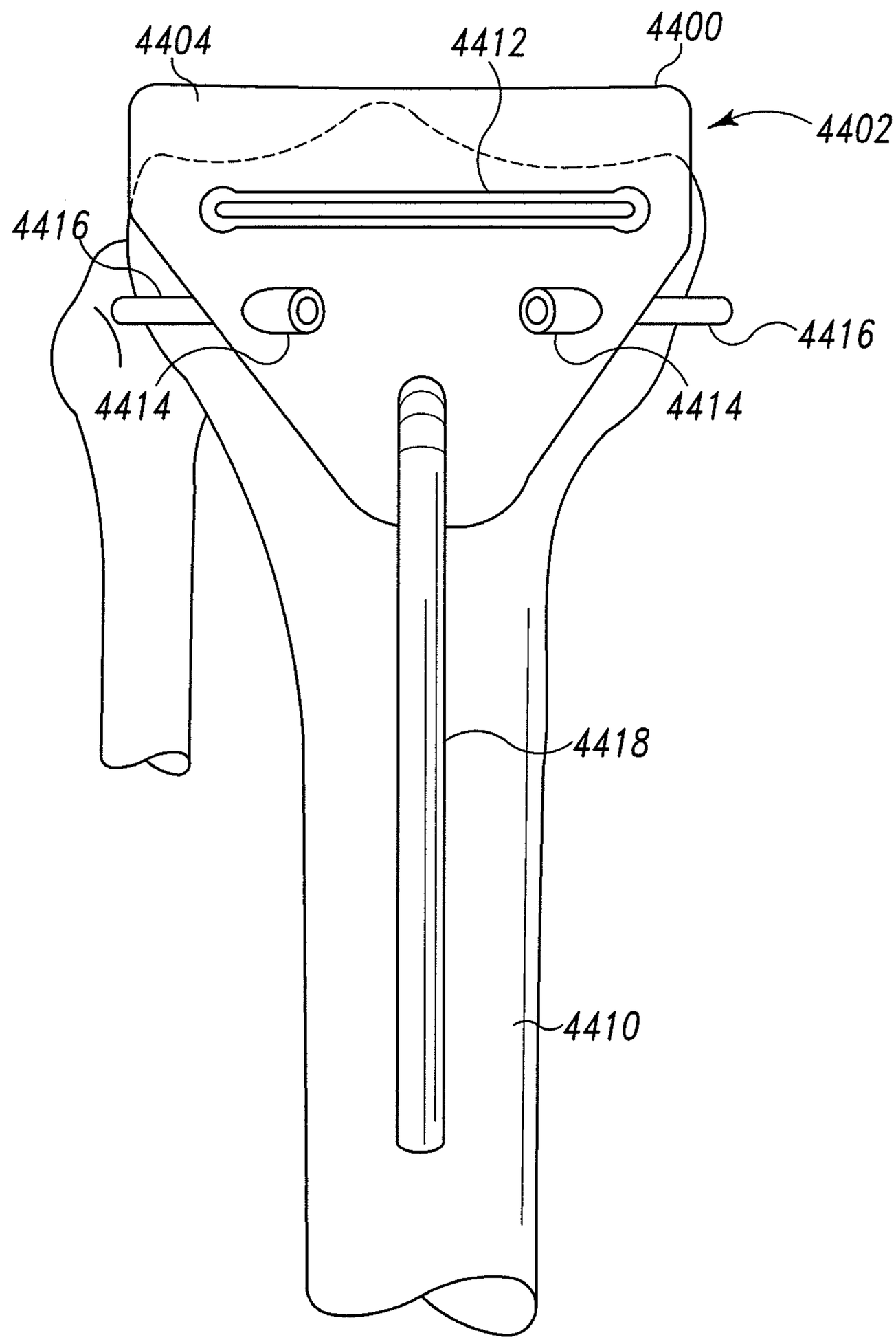

Fig. 102

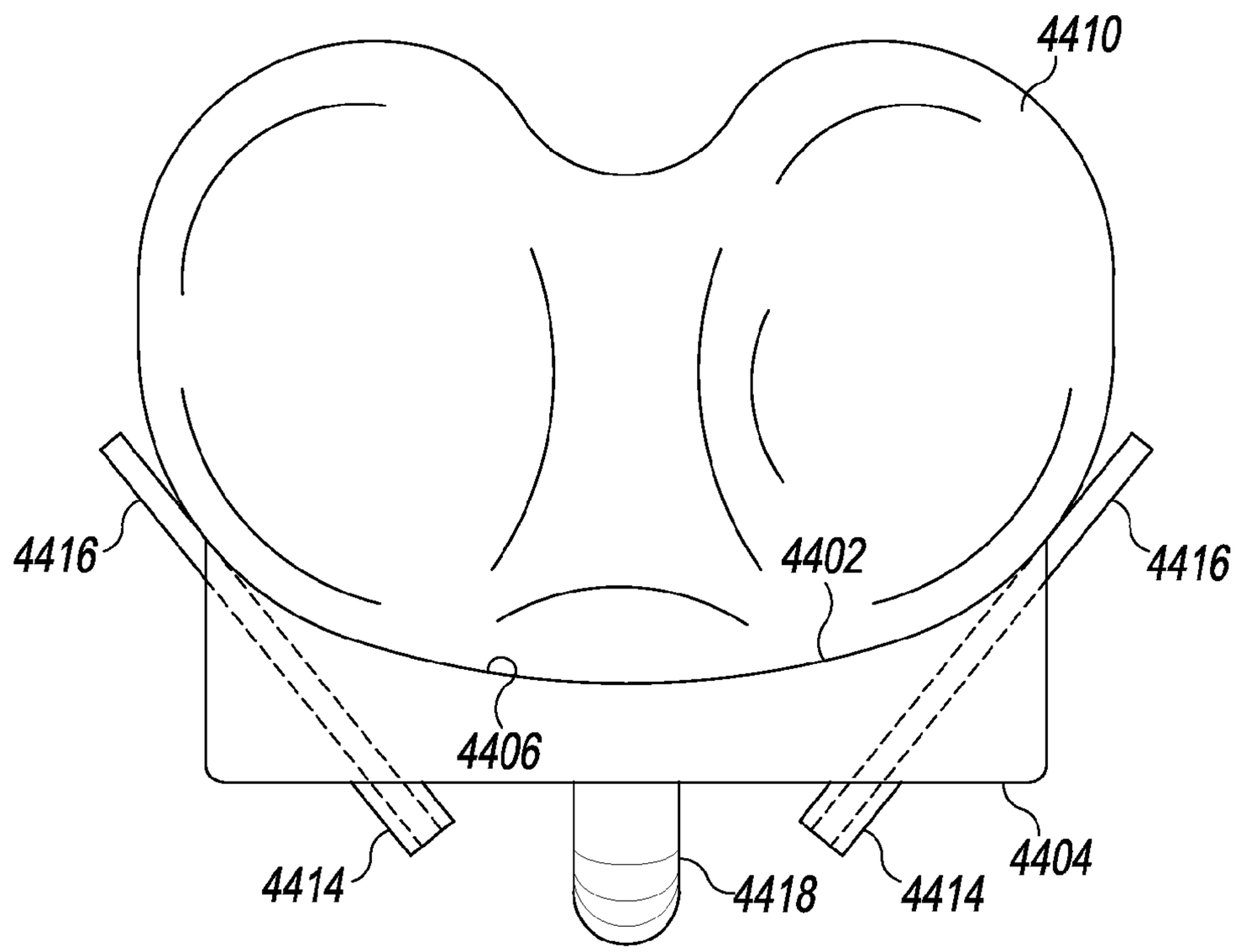

Fig. 103

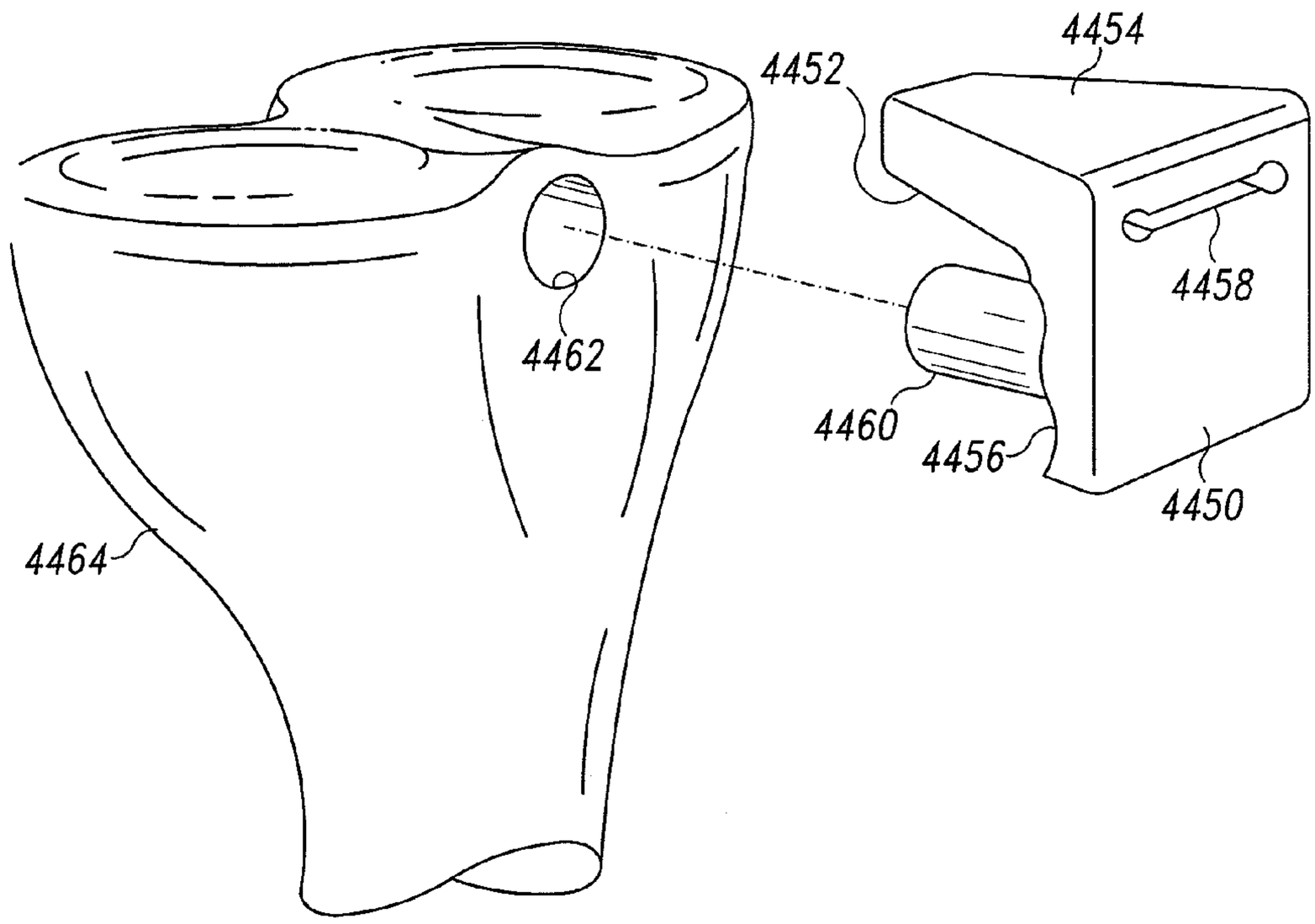

Fig. 104

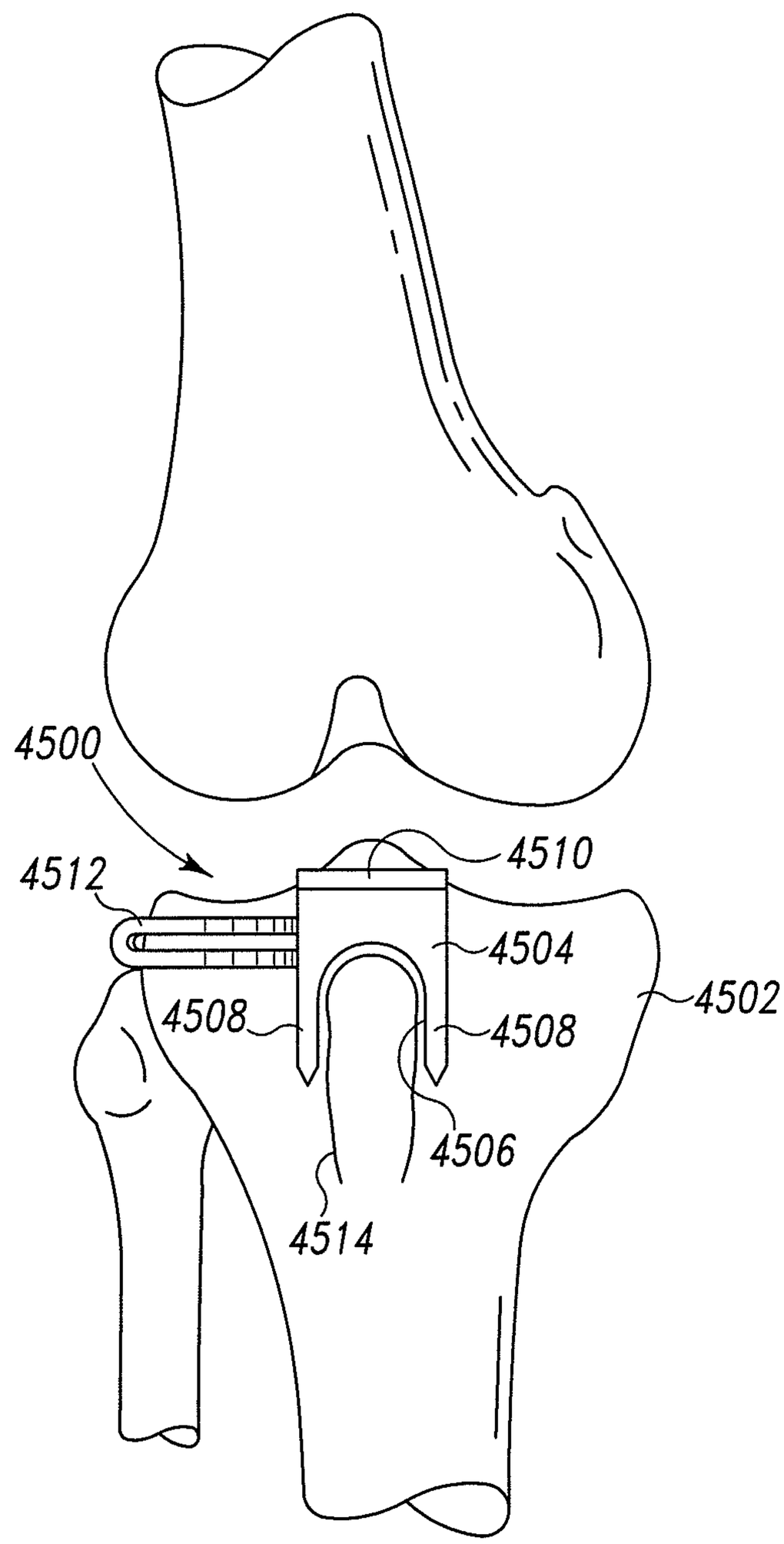

Fig. 105

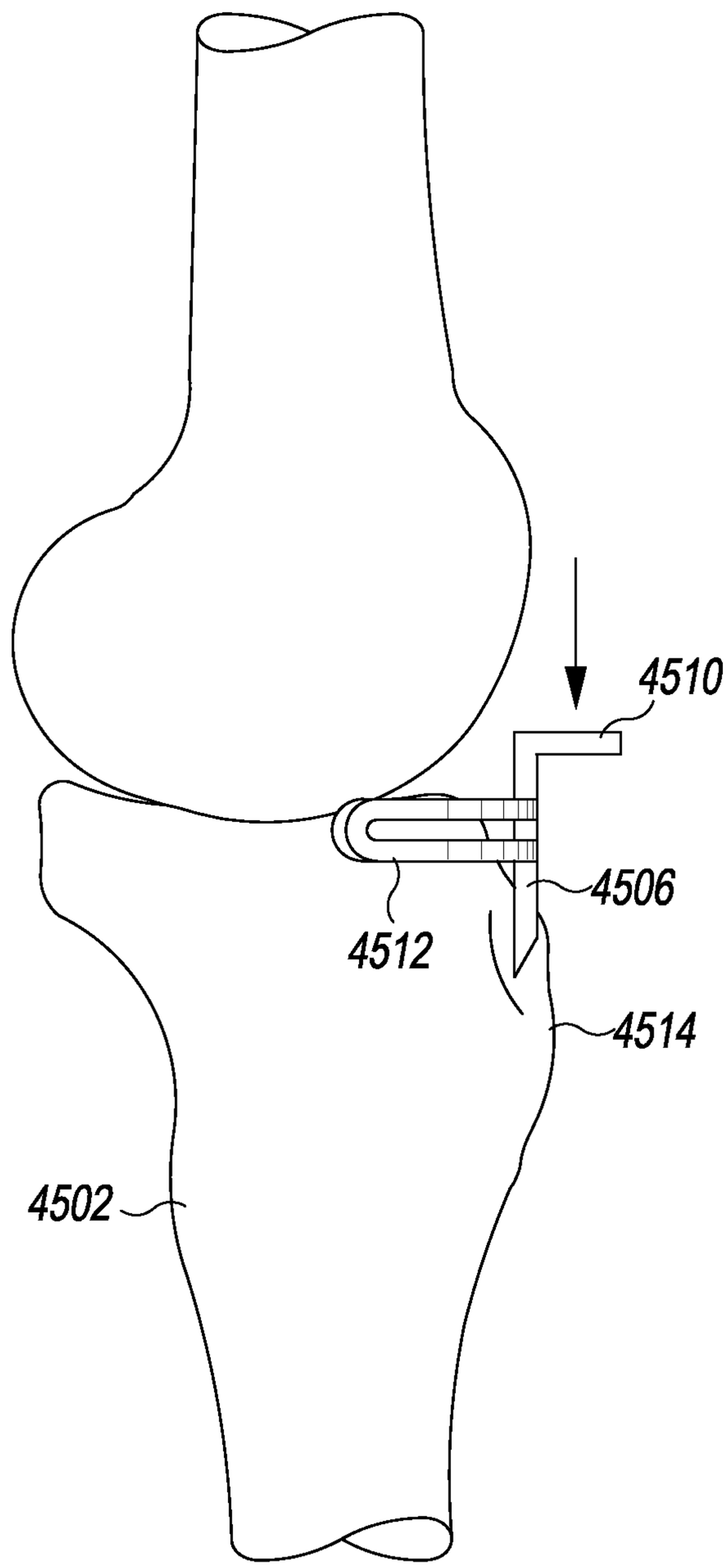

Fig. 106

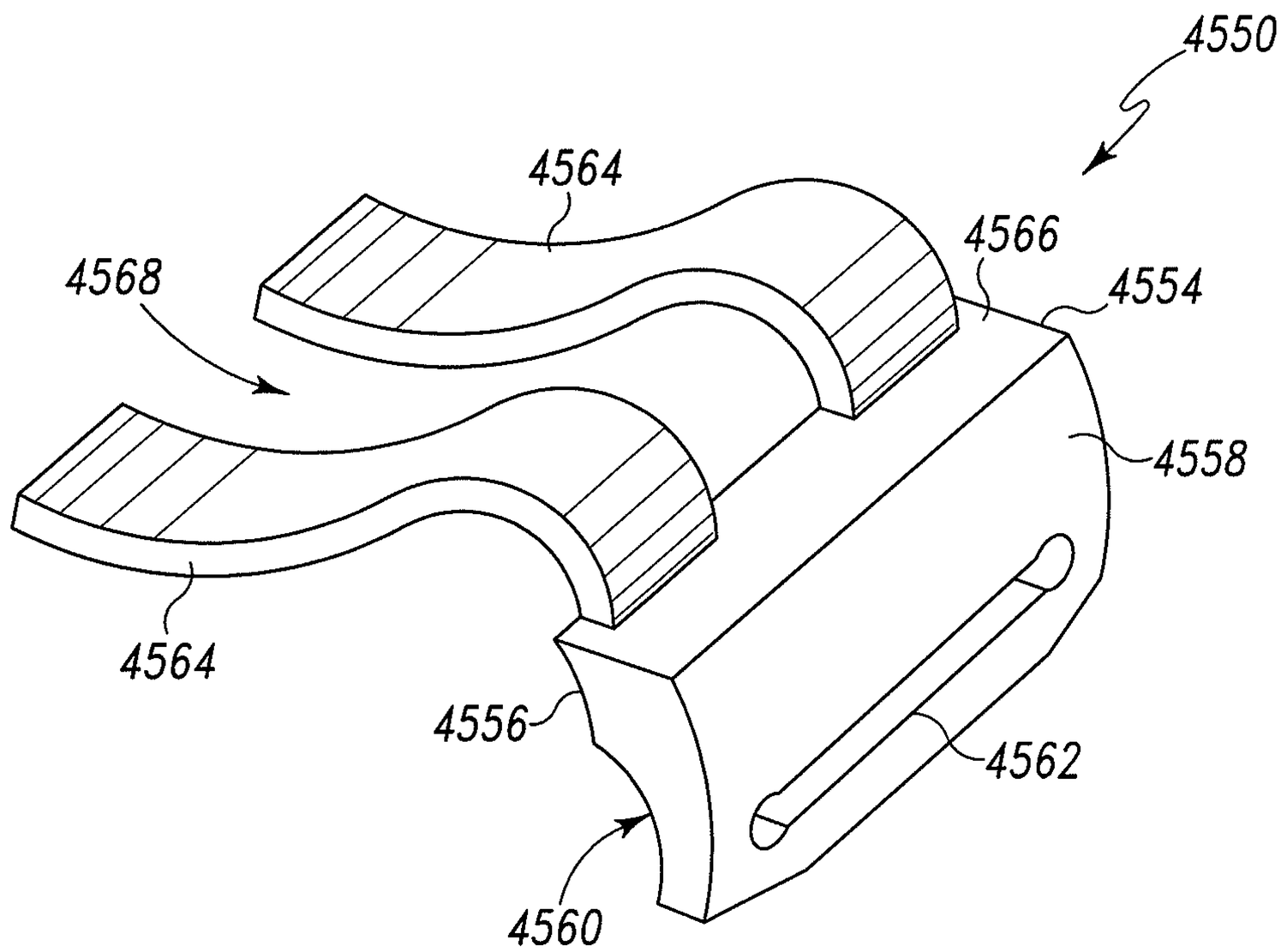

Fig. 107

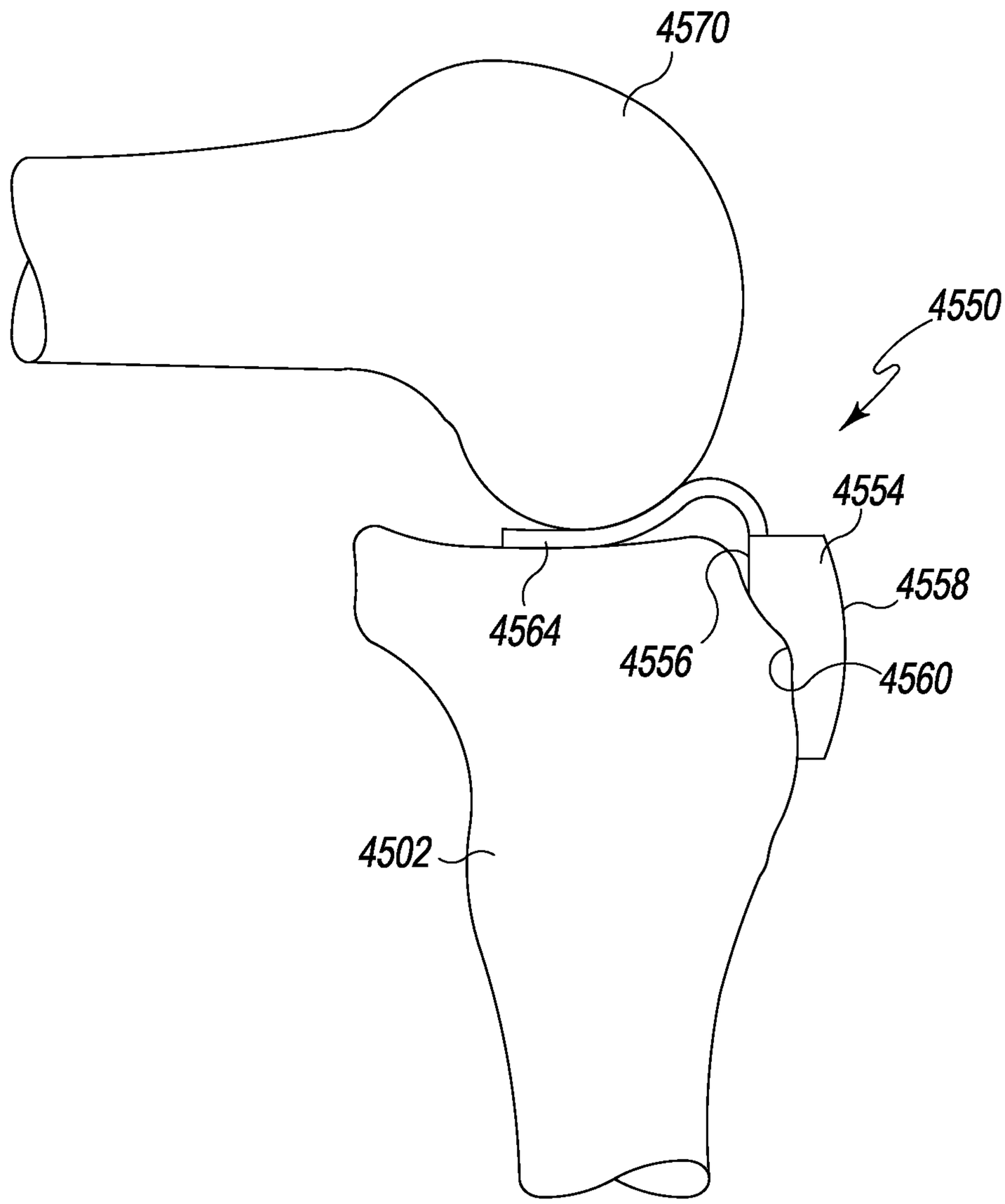

Fig. 108

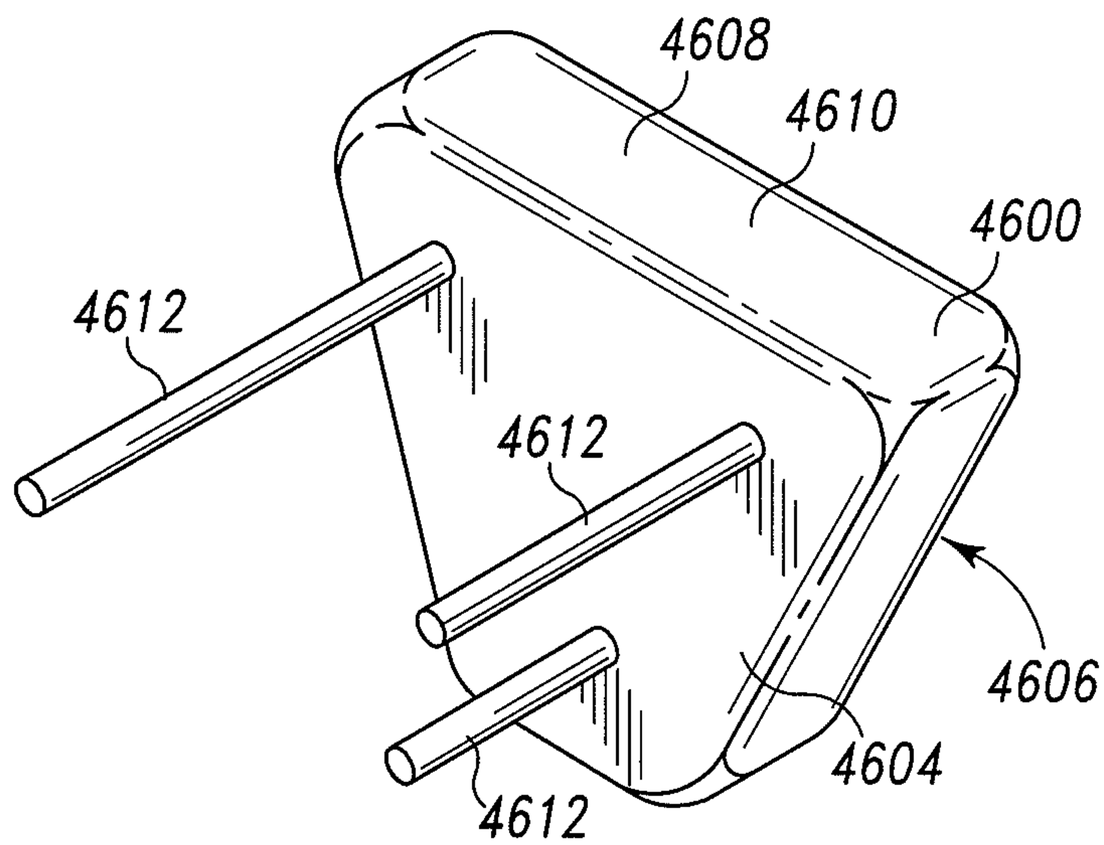

Fig. 109

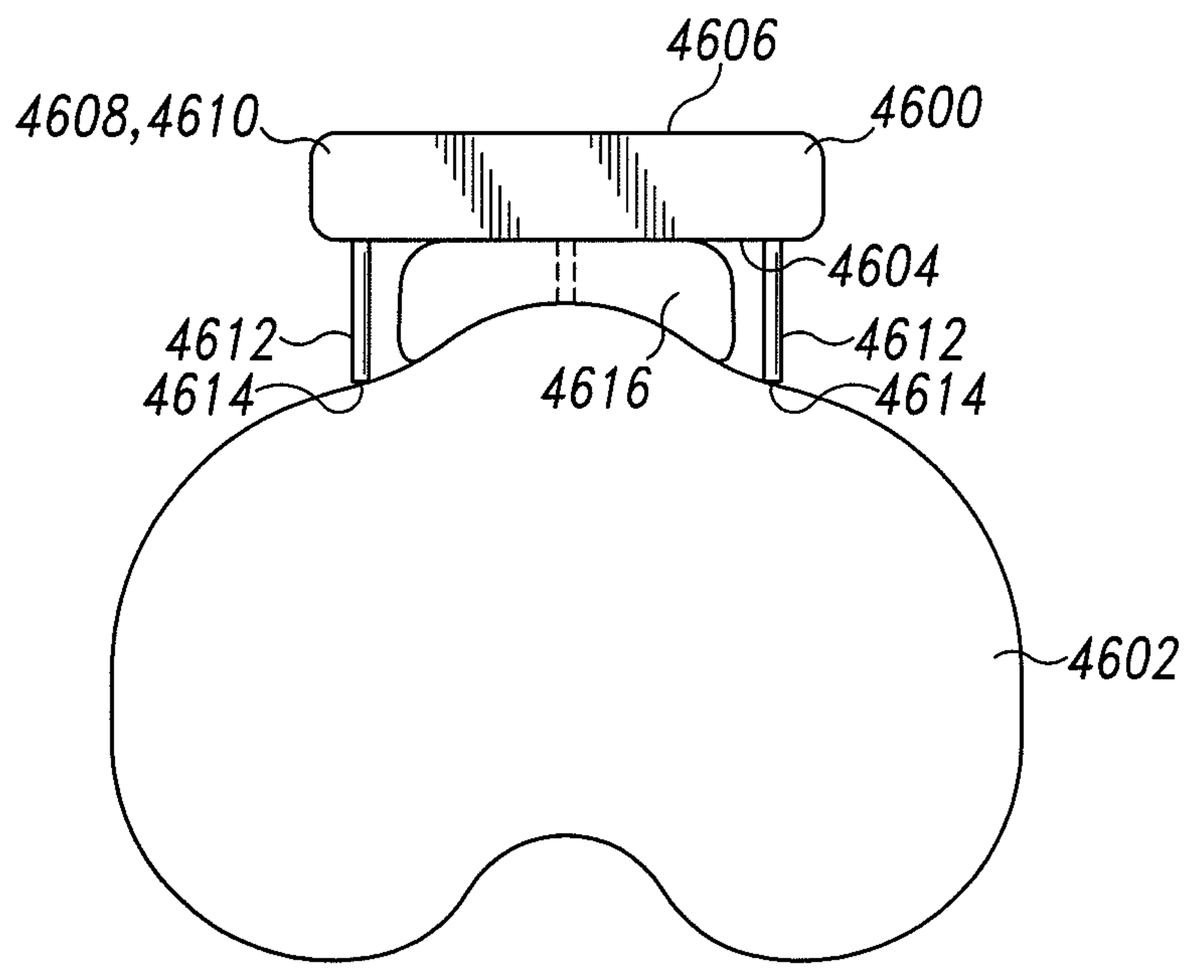

Fig. 110

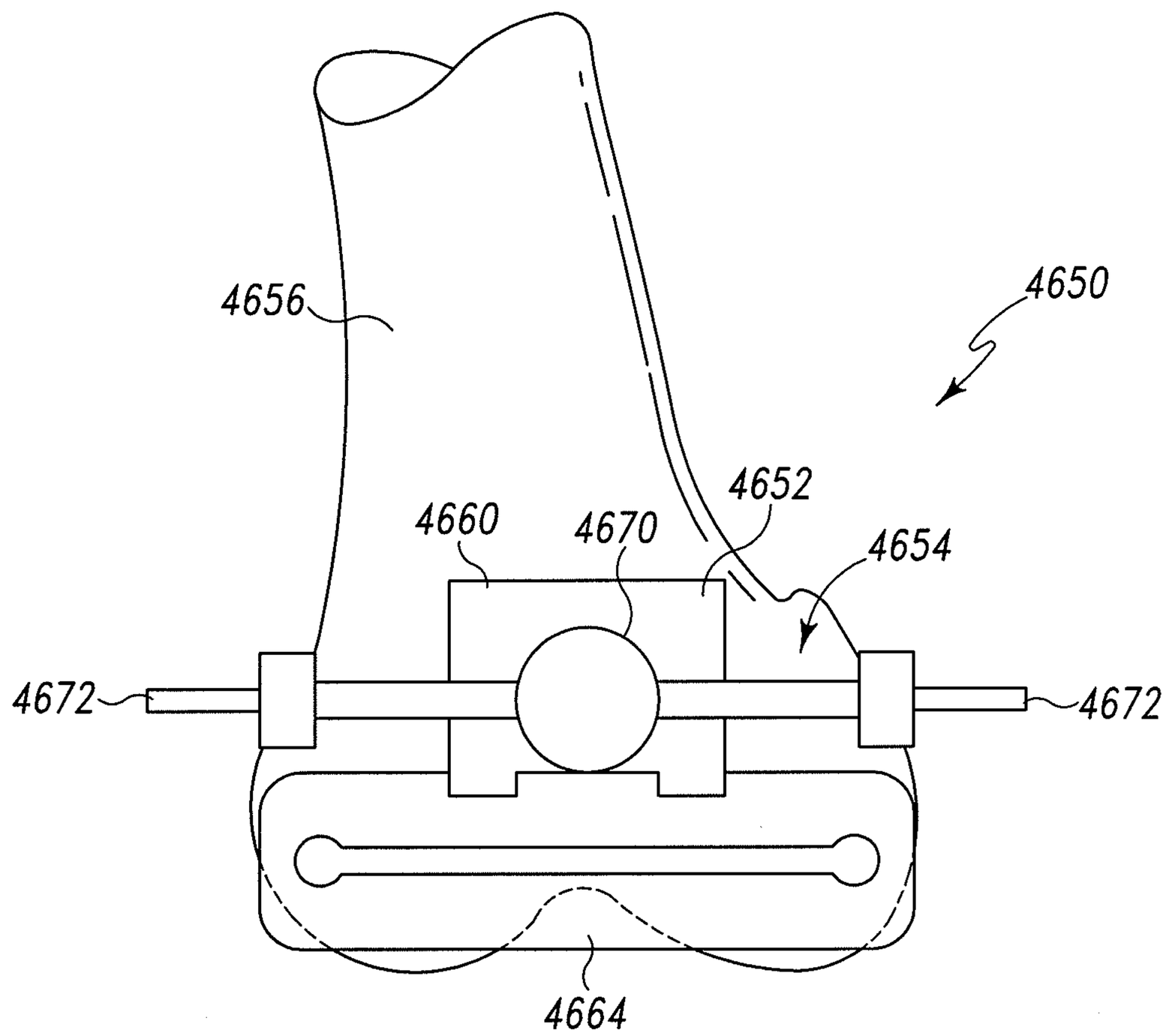

Fig. 111

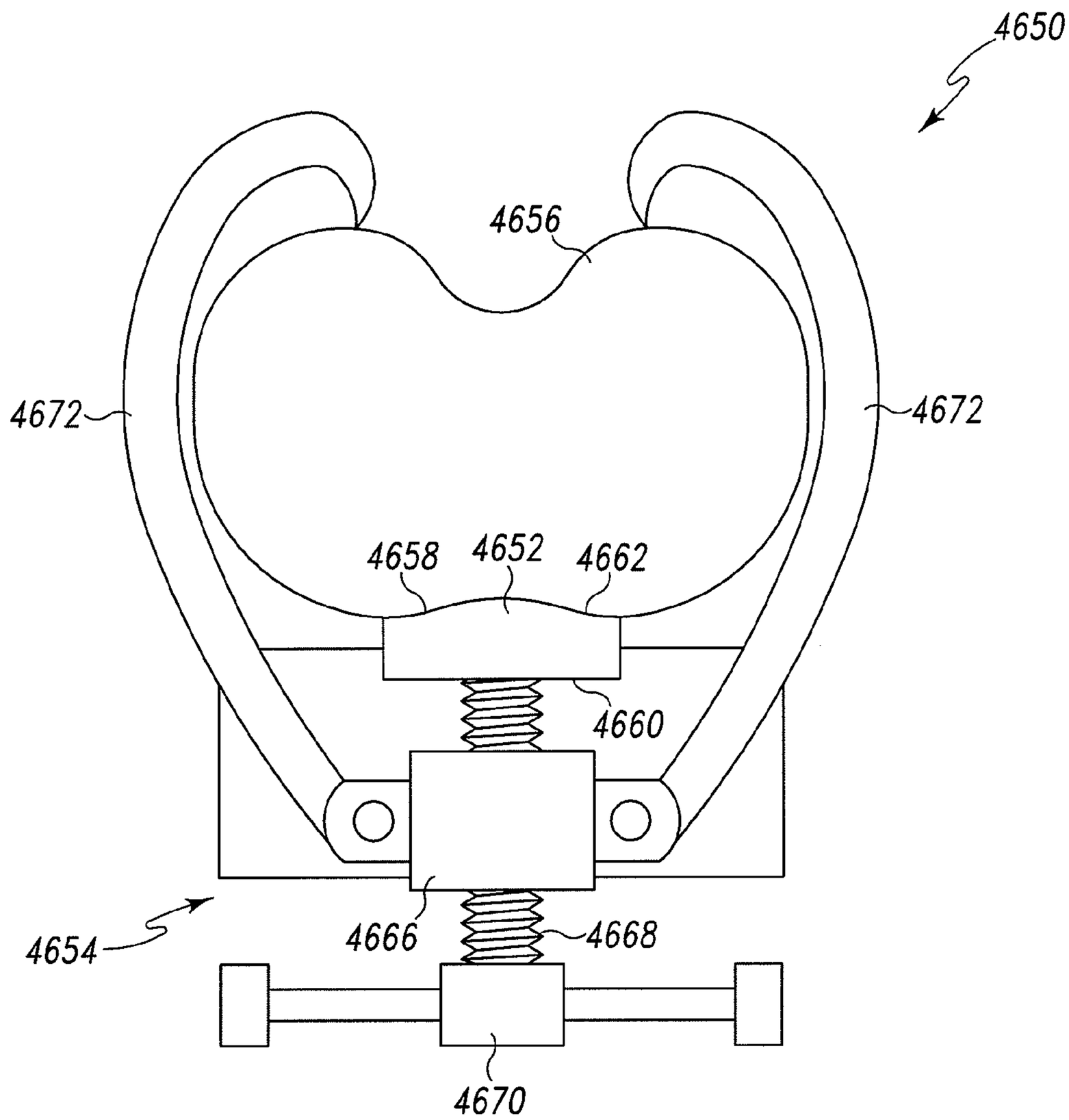

Fig. 112

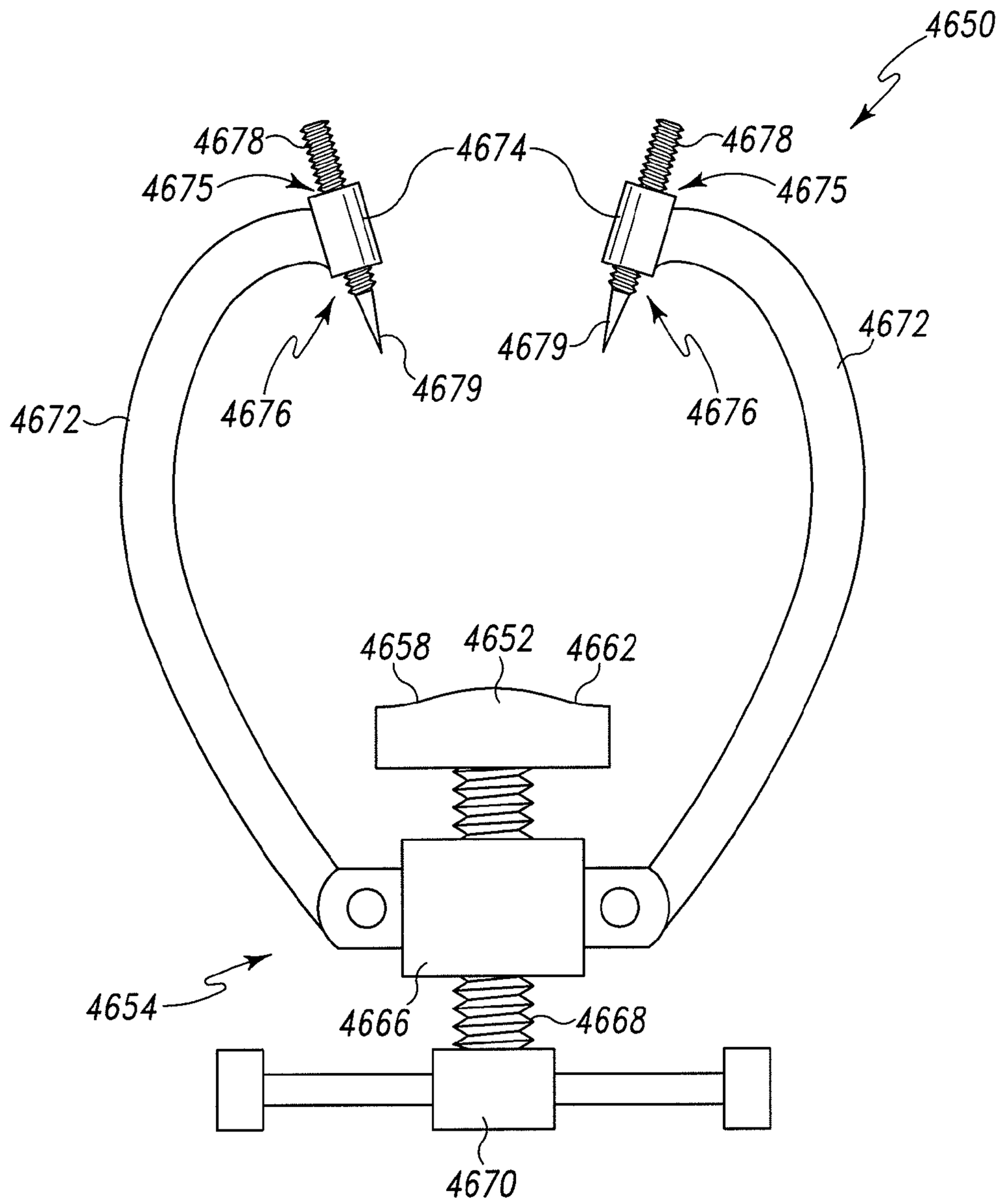
4650
4678
4674
4678
4675
4675
4672
4679
4679
4676
4676
4672
4658
4652
4662
4654
4666
4668
4670

Fig. 113

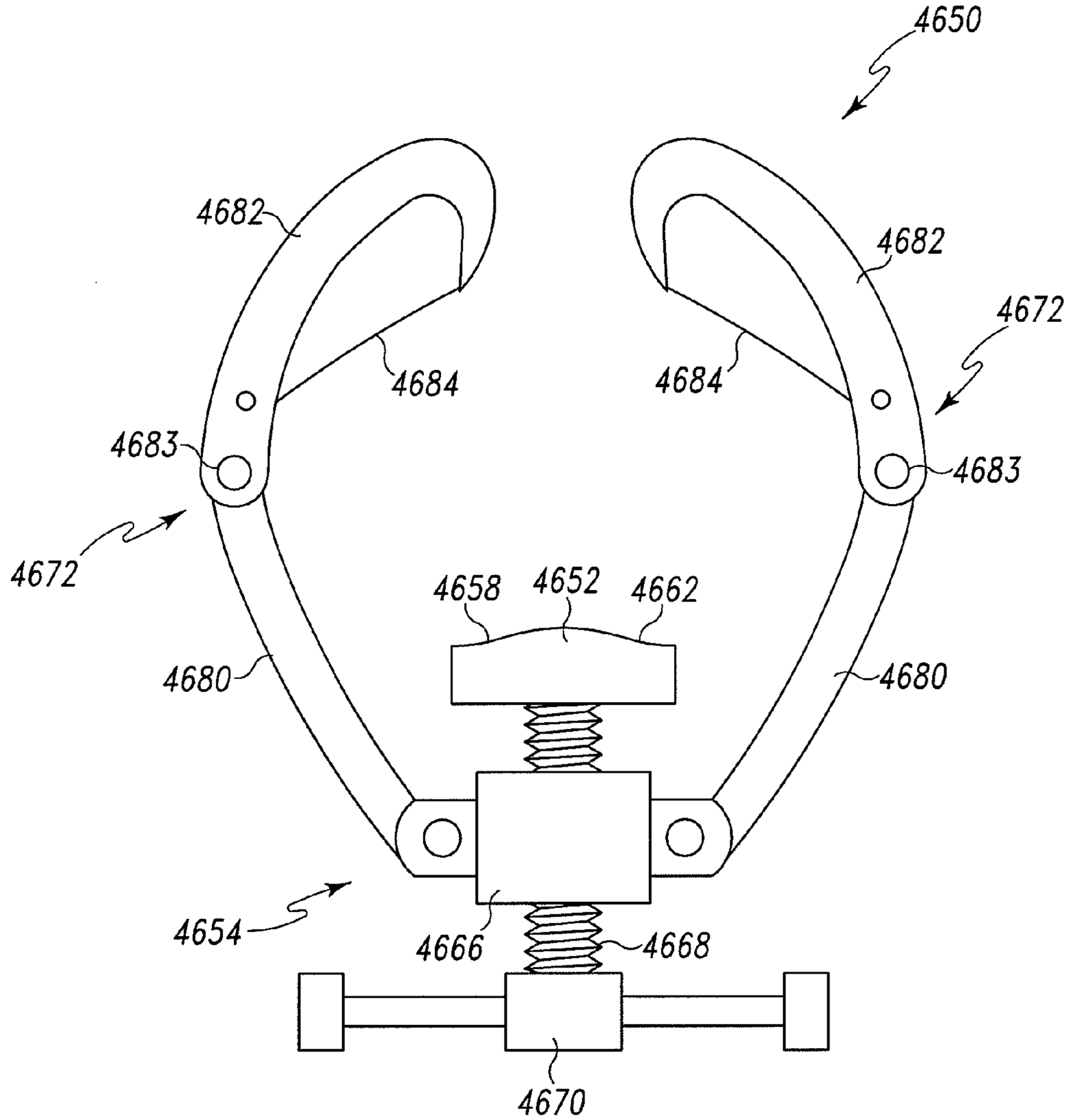
4650
4682
4682
4672
4684
4684
4683
4683
4672
4658
4652
4662
4680
4680
4654
4666
4668
4670

Fig. 114

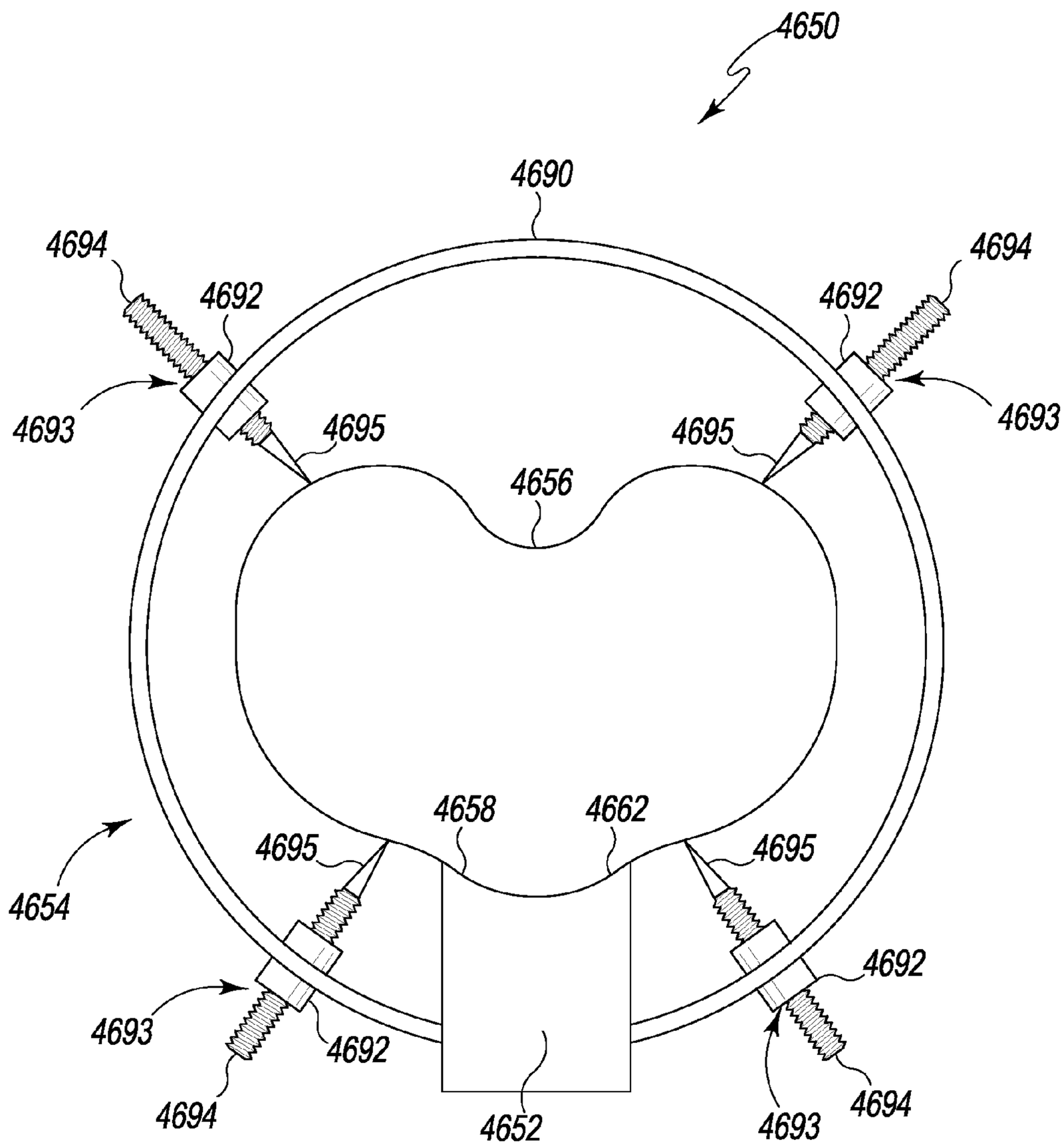
4650
4690
4694
4692
4692
4694
4693
4693
4695
4695
4656
4658
4662
4654
4695
4695
4692
4693
4692
4694
4652
4693
4694

Fig. 115

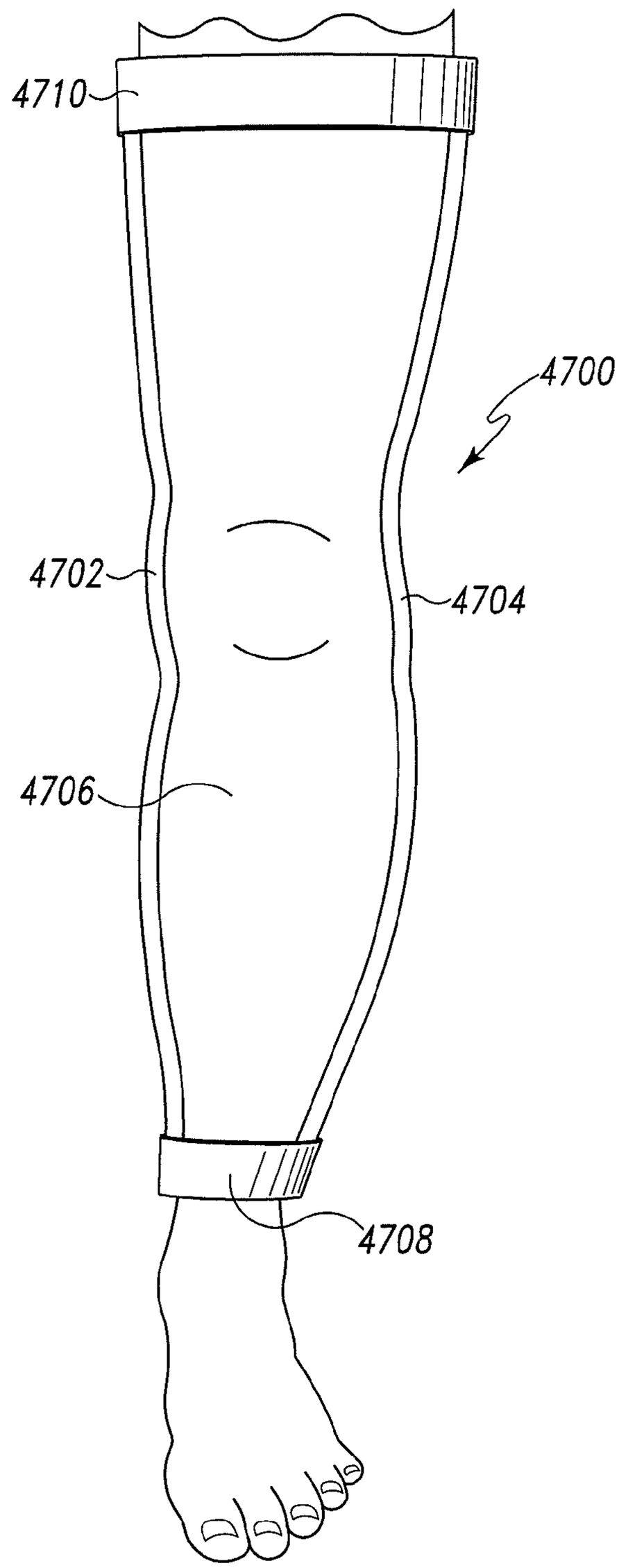

Fig. 116

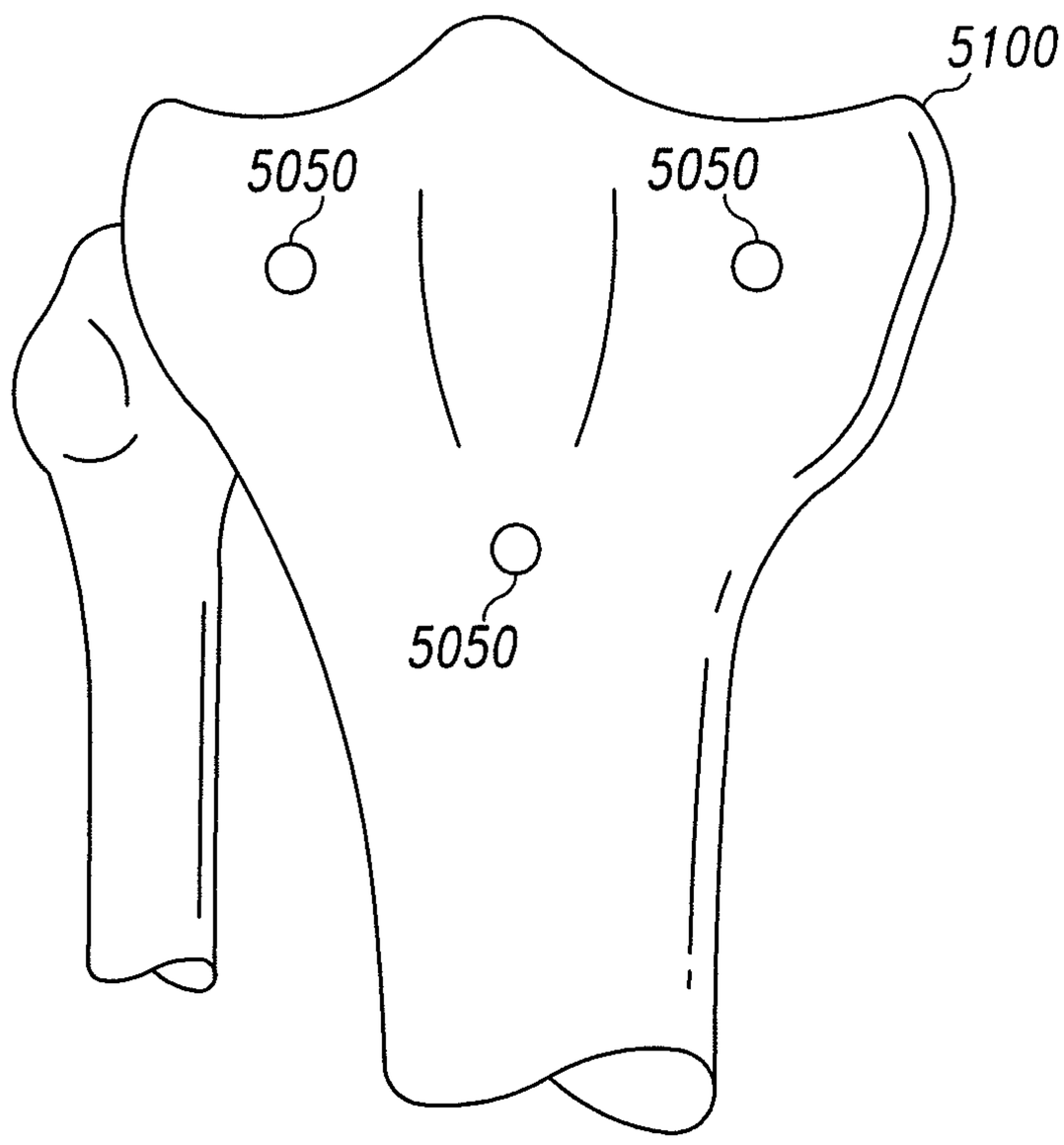

Fig. 117

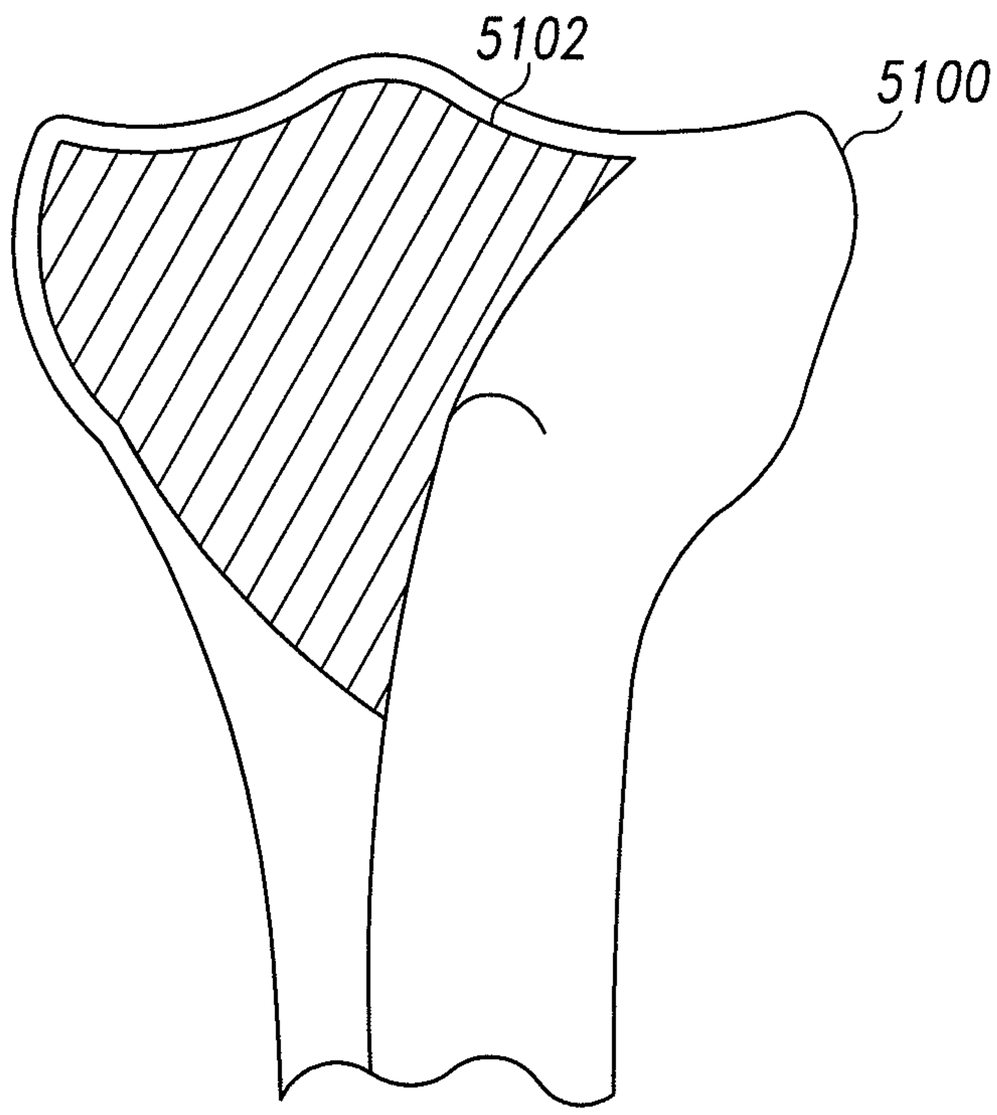

Fig. 118

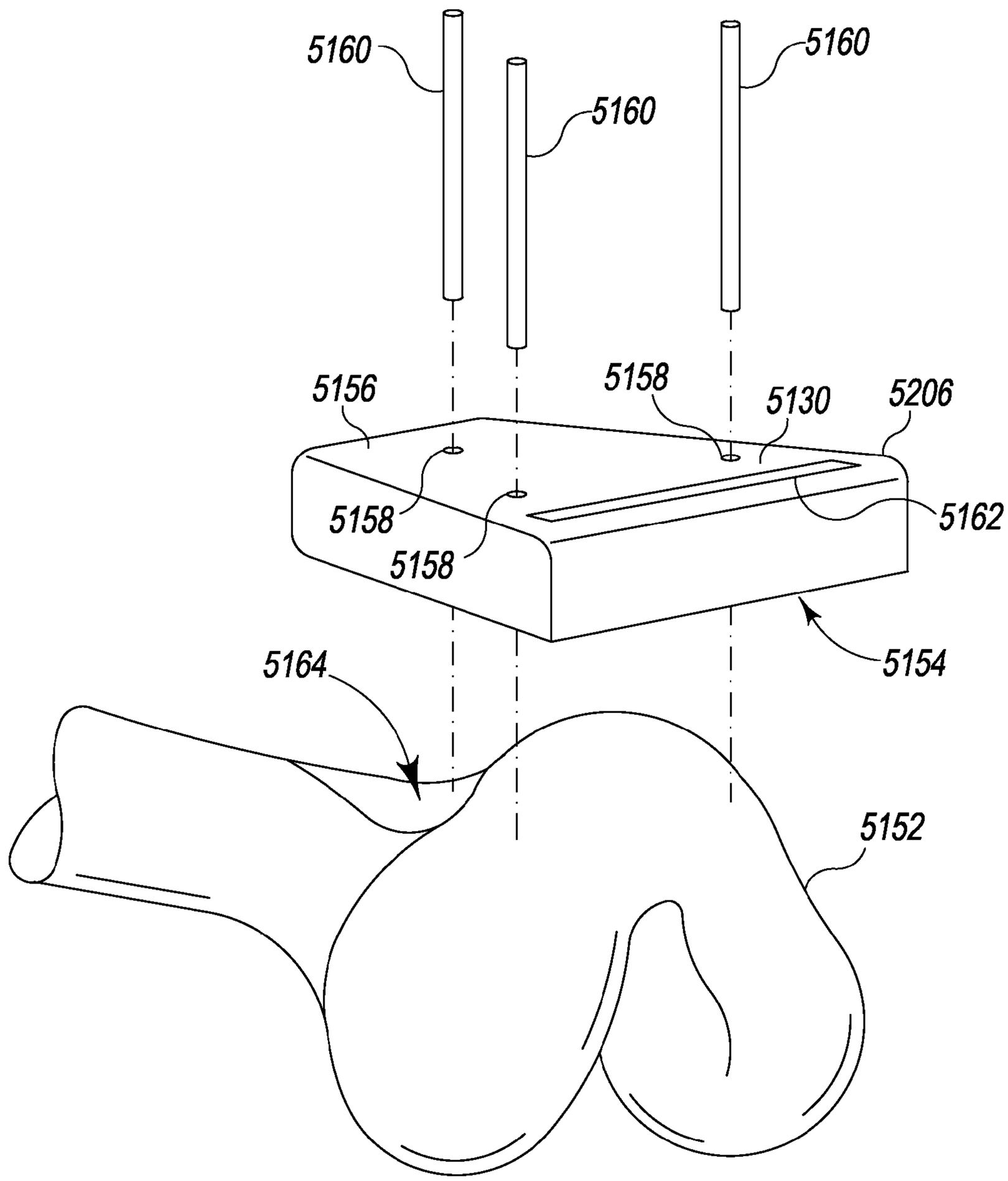
5160
5160
5160
5156
5158
5130
5206
5158
5158
5162
5154
5164
5152

Fig. 119

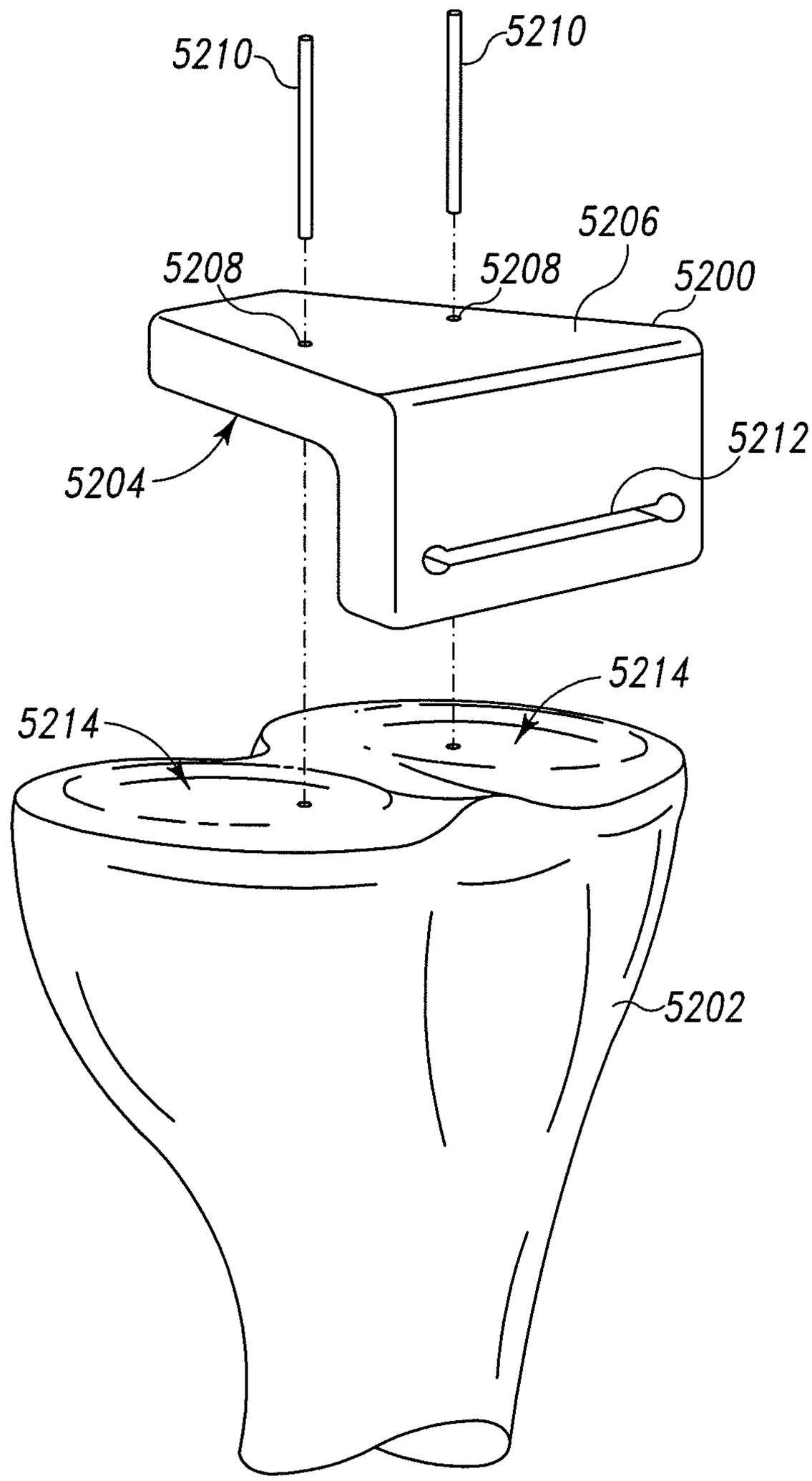

Fig. 120

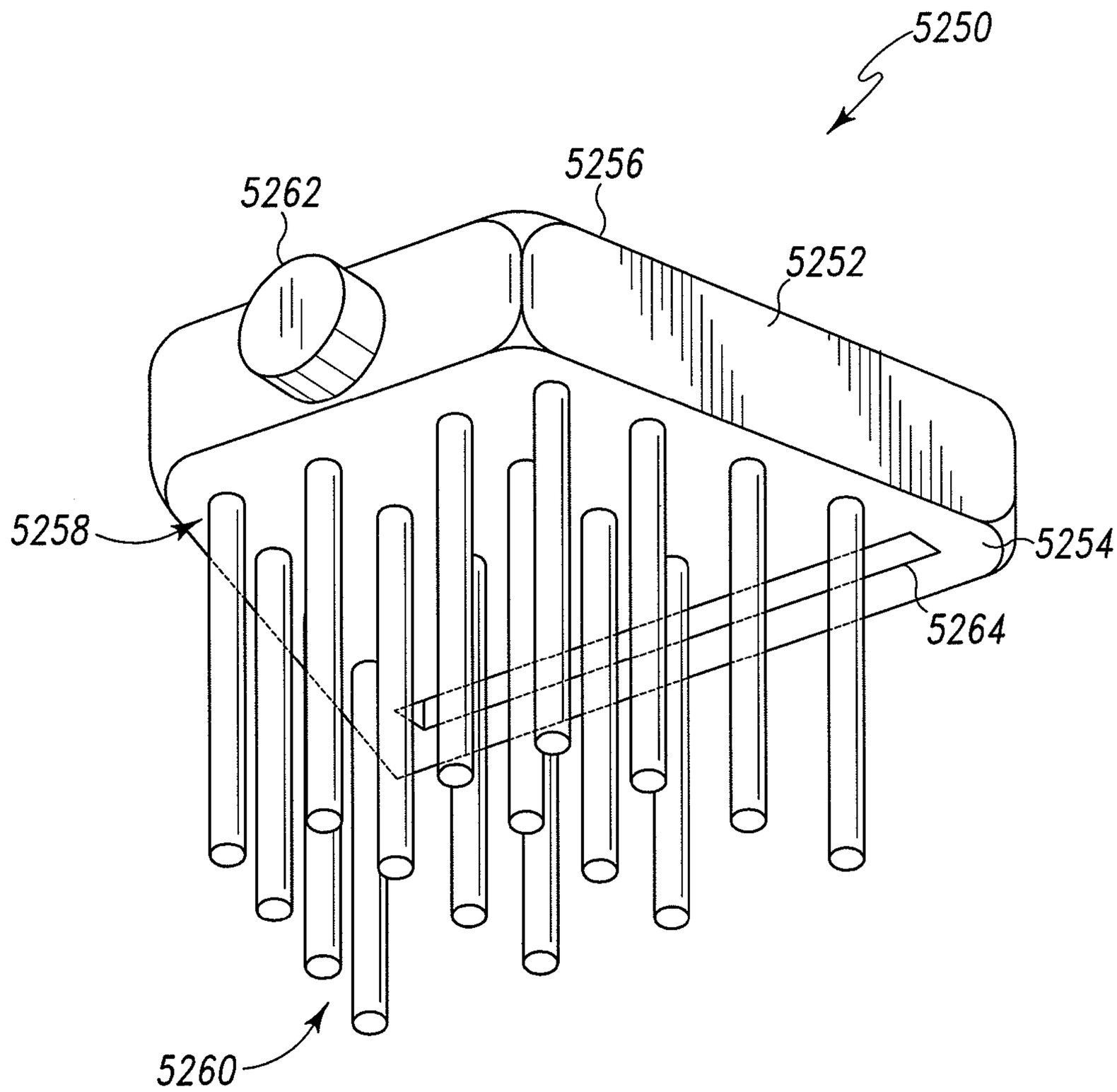

Fig. 121

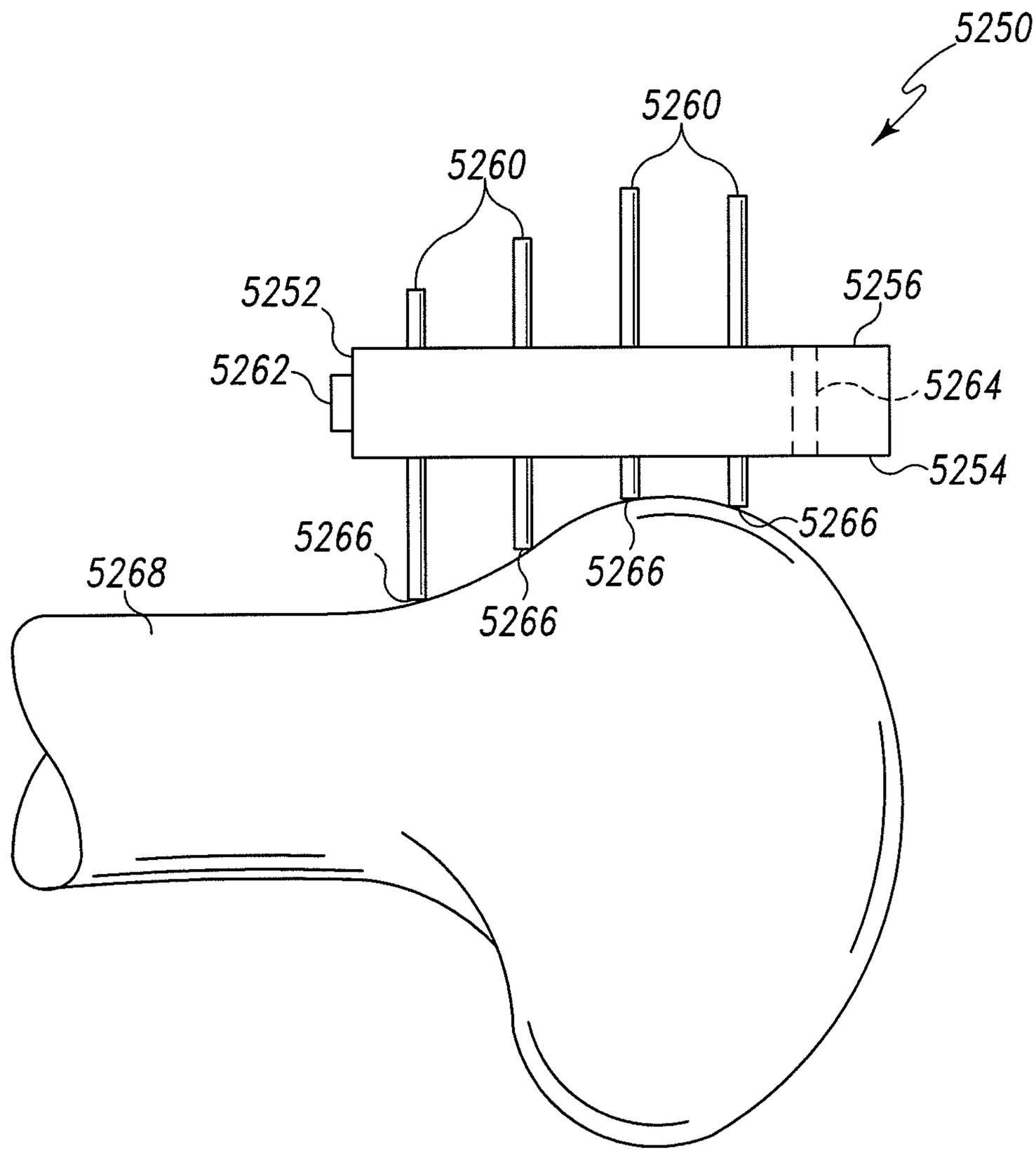
5250
5260
5260
5252
5256
5262
5264
5254
5266
5266
5266
5266
5268

Fig. 122

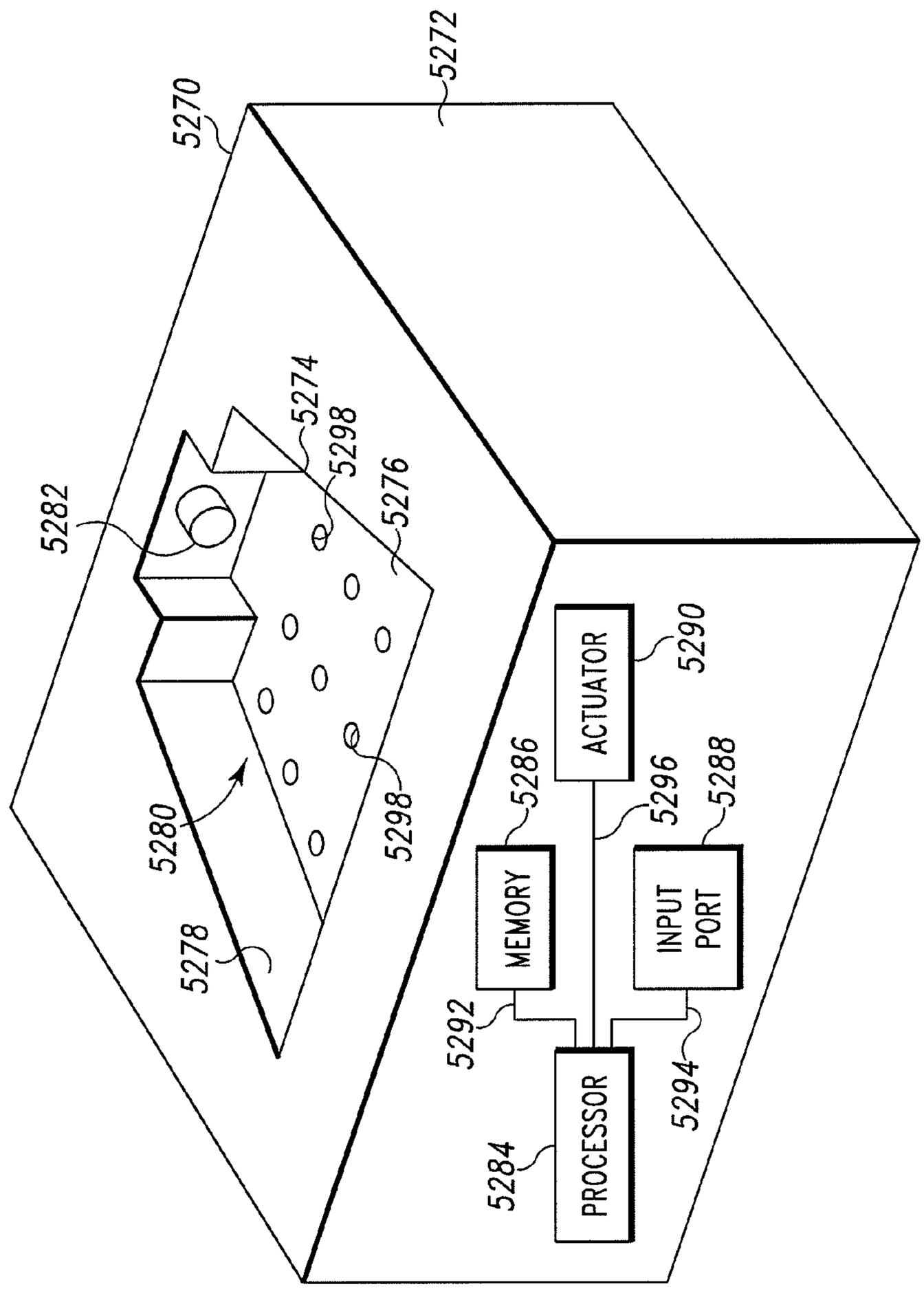
5270
5272
5274
5298
5276
5282
5280
5298
5278
ACTUATOR
5290
5286
5296
5288
MEMORY
INPUT PORT
5292
5294
PROCESSOR
5284

Fig. 123

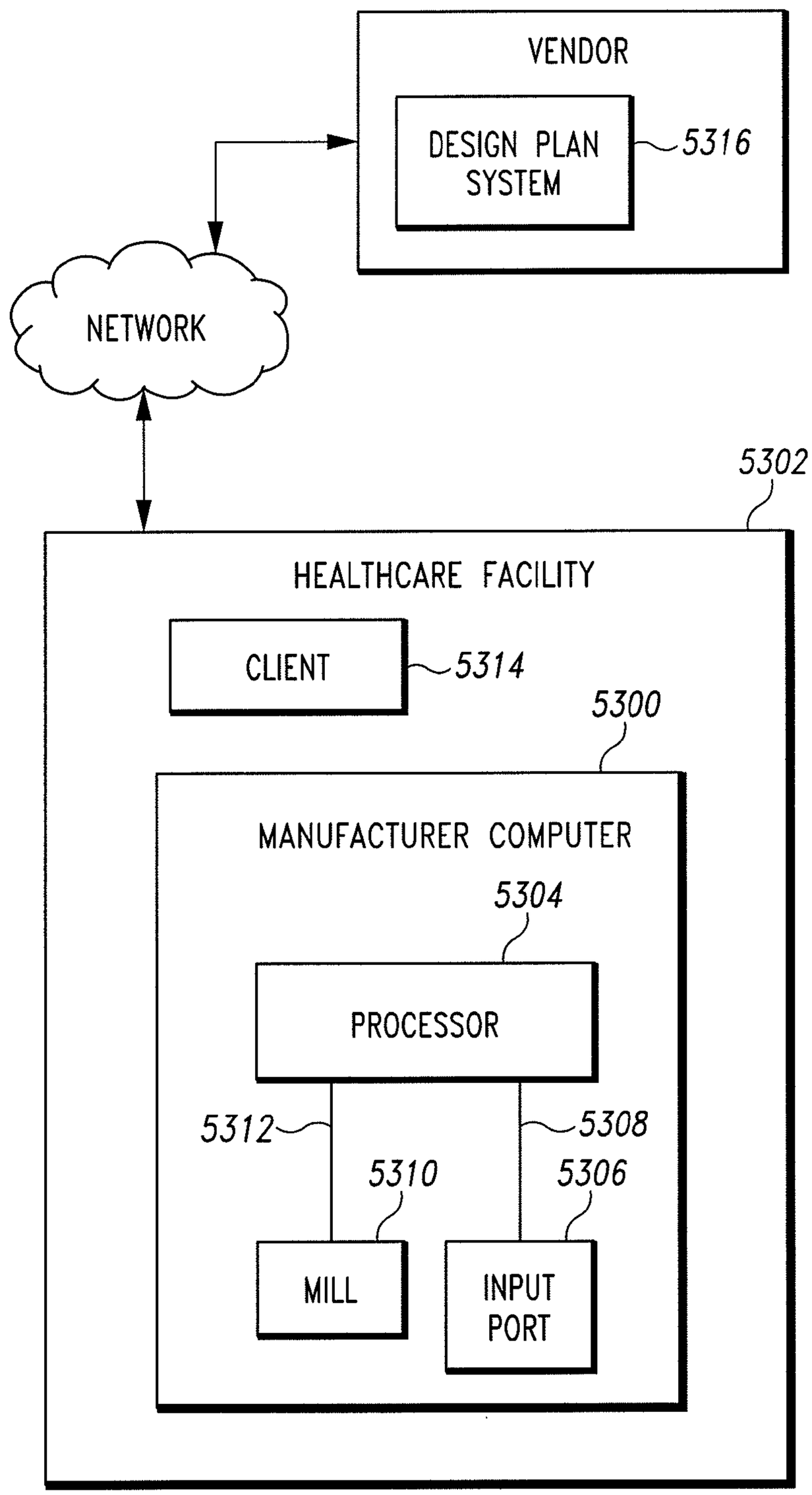
VENDOR
DESIGN PLAN SYSTEM
5316
NETWORK
5302
HEALTHCARE FACILITY
CLIENT
5314
5300
MANUFACTURER COMPUTER
5304
PROCESSOR
5312
5308
5310
5306
MILL
INPUT PORT

Fig. 124

APPARATUS AND METHOD FOR FABRICATING A CUSTOMIZED PATIENT-SPECIFIC ORTHOPAEDIC INSTRUMENT

This application claims priority under 35 U.S.C. § 119(e) to U.S. Provisional Patent Application Ser. No. 60/976,447 entitled "Method and Apparatus for Fabricating Customized Patent Instrumentation," which was filed on Sep. 30, 2007 by Dan Auger et al.; U.S. Provisional Patent Application Ser. No. 60/976,448 entitled "Adjustable Customized Patient-Specific Orthopaedic Surgical Instrumentation," which was filed on Sep. 30, 2007 by Luke Aram et al.; U.S. Provisional Patent Application Ser. No. 60/976,451 entitled "Customized Patient-Specific Instrumentation For Use In Orthopaedic Surgical Procedures," which was filed on Sep. 30, 2007 by Jeff Roose et al.; U.S. Provisional Patent Application Ser. No. 60/976,444 entitled "Method and Apparatus for Patient-Specific Positioning of Orthopaedic Surgical Instrumentation," which was filed on Sep. 30, 2007 by Luke Aram et al.; and U.S. Provisional Patent Application Ser. No. 60/976,446 entitled "Method and Apparatus for Aligning Customized Patient-Specific Orthopaedic Surgical Instruments," which was filed on Sep. 30, 2007 by Luke Aram et al., each of which is assigned to the same assignee as the present application, and each of which is hereby incorporated by reference.

CROSS-REFERENCE TO RELATED U.S. PATENT APPLICATIONS

Cross-reference is made to co-pending U.S. Utility patent application Ser. No. 12/240,985 entitled "Customized Patient-Specific Instrumentation And Method For Performing A Bone Re-cut," which was filed by Luke Aram et al.; co-pending U.S. Utility patent application Ser. No. 12/240,990 entitled "Customized Patient-Specific Instrumentation for Use In Orthopaedic Surgical Procedures," which was filed by Luke Aram et al.; co pending U.S. Utility patent application Ser. No. 12/240,988 entitled "Orthopaedic Bone Saw And Method of Use Thereof," which was filed by Travis Bennett; co-pending U.S. Utility patent application Ser. No. 12/240,992 entitled "Customized Patient-Specific Bone Cutting Blocks," which was filed by Eric Zajac; co-pending U.S. Utility patent application Ser. No. 12/240,994 entitled "Customized Patient-Specific Multi-Cutting Blocks," which was filed by Christopher Aker et al.; co-pending U.S. Utility patent application Ser. No. 12/240,996 entitled "Customized Patient-Specific Bone Cutting Instrumentation," which was filed by Luke Aram et al.; co-pending U.S. Utility patent application Ser. No. 12/240,997 entitled "Femoral/Tibial Customized Patient Specific Orthopaedic Surgical Instrumentation," which was filed by Christopher Aker et al.; co-pending U.S. Utility patent application Ser. No. 12/240,998 entitled "Adjustable Customized Patient-Specific Orthopaedic Surgical Instrumentation," which was filed by Christopher Aker et al.; co-pending U.S. Utility patent application Ser. No. 12/241,006 entitled "System and Method For Fabricating A Customized Patient-Specific Surgical Instrument," which was filed by Jeff Roose et al.; co-pending U.S. Utility patent application Ser. No. 12/241,002 entitled "Customized Patient-Specific Bone Cutting Block With External Reference," which was filed by Luke Aram et al.; and co-pending U.S. Utility patent application Ser. No. 12/240,999 entitled "Patient-Customizable Device And System For Performing An Orthopaedic Surgical Procedures," which was filed by Jeff Roose, each of which is assigned to the same assignee as the present application, each of which is filed concurrently herewith, and each of which is hereby incorporated by reference.

TECHNICAL FIELD

The present disclosure relates generally to customized patient-specific orthopaedic surgical instruments and to methods, devices, and systems for fabricating and positioning such instruments.

BACKGROUND

Joint arthroplasty is a well-known surgical procedure by which a diseased and/or damaged natural joint is replaced by a prosthetic joint. A typical knee prosthesis includes a tibial tray, a femoral component, a polymer insert or bearing positioned between the tibial tray and the femoral component, and, in some cases, a polymer patella button. To facilitate the replacement of the natural joint with the knee prosthesis, orthopaedic surgeons use a variety of orthopaedic surgical instruments such as, for example, cutting blocks, drill guides, milling guides, and other surgical instruments. Typically, the orthopaedic surgical instruments are generic with respect to the patient such that the same orthopaedic surgical instrument may be used on a number of different patients during similar orthopaedic surgical procedures.

SUMMARY

According to one aspect, a method of performing an orthopaedic surgical procedure on a bone of a patient is disclosed. The method may include positioning a customized patient-specific cutting block in contact with the bone of a patient. In some embodiments, the method may include positioning the customized patient-specific cutting block in contact with a femur of the patient. In some embodiments, the method may include positioning the customized patient-specific cutting block in contact with a tibia of the patient. The method may include inserting a pair of guide pins into a pair of guide pin holes defined in the customized patient-specific cutting block. The method may also include making a first cut in the bone of the patient with the customized patient-specific cutting block. In some embodiments, the method may include making the first cut in the femur of the patient with the customized patient-specific cutting block. In other embodiments, the method may include making the first cut in the tibia of the patient with the customized patient-specific cutting block. The method may also include removing the customized patient-specific cutting block from the bone of the patient without removing the guide pins from the bone of the patient.

The method may include inserting the pair of guide pins into a pair of guide pin holes defined in a patient-universal re-cut block and making a second cut in the bone of the patient with the patient-universal re-cut block. In some embodiments, the method may include making the second cut in the femur of the patient with the patient-universal re-cut block. The method may also include making the second cut in the femur of the patient substantially parallel to the first cut. Additionally, in some embodiments, the method may include making the second cut in the femur oriented in an angled position relative to the first cut.

In some embodiments, the method may include making the second cut in the tibia of the patient with the patient-universal re-cut block. The method may include making the second cut in the tibia of the patient substantially parallel to

the first cut. Additionally, in some embodiments, the method may include making the second cut in the tibia oriented in an angled position relative to the first cut.

In some embodiments, the method may include inserting the pair of guide pins into the pair of guide pin holes defined in the patient-universal re-cut block such that a cutting guide of the patient-universal re-cut block is substantially parallel to the first cut. The method may include making the second cut in the bone of the patient with the patient-universal re-cut block such that the second cut is substantially parallel to the first cut. Additionally, in some embodiments, the cutting guide of the patient-universal re-cut block may be oriented in an angled position relative to the first cut. The method may include making the second cut in the bone of the patient with the patient-universal re-cut block such that the second cut is oriented in an angled position relative to the first cut.

In some embodiments, the method may include determining an amount of additional bone to be removed from the bone of the patient subsequent to making the first cut in the bone of the patient with the customized patient-specific cutting block. The method may include selecting a pair of guide pin holes from a plurality of pairs of guide pin holes defined in the patient-universal re-cut block that corresponds to the amount of additional bone to be removed from the bone of a patient. The method may include inserting the pair of guide pins into the selected pair of guide pin holes defined in the patient-universal re-cut block that corresponds to the amount of additional bone to be removed from the bone of a patient.

According to another aspect, an orthopaedic instrument assembly may include a customized patient-specific cutting block and a patient-universal re-cut block. In some embodiments, the customized patient-specific cutting block may be a patient-specific femoral cutting block and the patient-universal re-cut block may be a patient-universal femoral re-cut block. In other embodiments, the customized patient-specific cutting block may be a patient-specific tibial cutting block and the patient-universal re-cut block may be a patient-universal femoral re-cut block.

The customized patient-specific cutting block may include a cutting guide and a pair of guide pin holes. The patient-universal re-cut block may include a cutting guide and a plurality of pairs of guide pin holes. Each pair of guide pin holes of patient-universal re-cut block may correspond in diameter and spacing with the pair of guide pin holes of the customized patient-specific cutting block.

In some embodiments, the cutting guide of the patient-universal re-cut block may be substantially parallel to the cutting guide of the customized patient-specific cutting block when a one pair of guide pin holes of the patient universal re-cut block is aligned with the pair of guide pin holes of the customized patient-specific cutting block. In some embodiments, the cutting guide of the patient-universal re-cut block may be oriented in an angled position relative to the cutting guide of the customized patient-specific cutting block when a one pair of guide pin holes of the patient universal re-cut block is aligned with the pair of guide pin holes of the customized patient-specific cutting block.

In another aspect, a method of performing an orthopaedic surgical procedure on a femur of a patient is disclosed. The method may include positioning or placing a customized patient-specific cutting block in contact with the femur of the patient and inserting a pair of guide pins into a pair of guide pin holes defined in the customized patient-specific cutting block. The method may also include making a first cut in the femur of the patient with the customized patient-specific cutting block. The method may include removing the customized patient-specific cutting block without removing the guide pins from the femur of the patient. The method may also include determining an amount of additional bone to be removed from the femur of the patient subsequent to making the first cut in the femur and selecting a pair of guide pin holes from a plurality of pairs of guide pin holes defined in a patient-universal re-cut block which corresponds to the amount of additional bone to be removed from the femur of the patient.

The method may further include inserting the pair of guide pins into the selected pair of guide pin holes defined in the patient-universal re-cut block which corresponds to the amount of additional bone to be removed from the femur of the patient. The method may include making a second cut in the femur of the patient with the patient-universal re-cut block. In some embodiments, the method may include inserting the pair of guide pins into the selected pair of guide pin holes such that a cutting guide of the patient-universal re-cut block is substantially parallel to the first cut. The method may include making the second cut in the femur of the patient with the patient-universal re-cut block such that the second cut is substantially parallel to the first cut. Additionally, in some embodiments, the method may include inserting the pair of guide pins into the selected pair of guide pin holes such that a cutting guide of the patient-universal re-cut block is oriented in an angled position relative to the first cut. The method may include making the second cut in the femur of the patient with the patient-universal re-cut block such that the second cut is oriented in an angled position relative to the first cut.

According to one aspect, an orthopaedic bone saw for cutting the bone of a patient is disclosed. The orthopaedic bone saw may include a chuck configured to receive a bone saw blade and a guide configured to receive one or more surgical guide pins to align the bone saw in a predetermined position relative to the bone of the patient. In some embodiments, the guide may include a body having one or more openings to receive the one or more surgical guide pins. Additionally, in some embodiments, the guide may have an elongated body with a slot, and the slot may be configured to receive the one or more surgical guide pins.

In some embodiments, the orthopaedic bone saw may have a swivel secured to the guide that permits the chuck and the guide to swivel relative to one another. In some embodiments, the orthopaedic bone saw may have a handle and a housing secured to the handle. The chuck may be secured to the housing, and the swivel may be positioned between the housing and the guide. The guide may swivel relative to the housing. In some embodiments, both the chuck and the guide may be secured to the housing.

According to another aspect, an orthopaedic bone saw tool for cutting the bone of a patient is disclosed. The orthopaedic bone saw tool may include a bone saw and a bone saw blade. The bone saw may have a housing, a handle secured to the housing, and a chuck secured to the housing. The bone saw blade may be secured to the chuck.

The bone saw may include a guide secured to the housing that is configured to receive one or more surgical guide pins. In some embodiments, the guide may have a body that has one or more openings to receive the one or more surgical guide pins. In some embodiments, the guide may have an elongated body that has a slot. The slot may be configured to receive the one or more surgical guide pins. In some embodiments, the bone saw may include a swivel positioned

between the housing and the guide. The swivel may permit the guide and the bone saw blade to swivel relative to one another.

According to another aspect, a method of performing an orthopaedic surgical procedure on a bone of a patient is disclosed. The method may include inserting a first end of one or more surgical guide pins into the bone of the patient. The method may also include advancing a second end of the one or more surgical guide pins into a guide secured to a bone saw so as to position the bone saw in a predetermined position relative to the bone of the patient. The method may include making a cut in the bone of the patient with the bone saw while the one or more surgical guide pins are positioned in the guide.

In some embodiments, the guide may have a body having one or more openings defined therein. The method may include advancing the second end of the one or more surgical guide pins into the one or more openings of the body of the guide. Additionally, in some embodiments, the guide may include an elongated body having a slot. The method may include advancing the second end of the one or more surgical guide pins into the slot of the elongated body of the guide.

In some embodiments, the bone saw may include a bone saw blade secured to chuck and a swivel positioned between the chuck and the guide. The method may include swiveling the chuck relative the guide while making the cut in the bone of the patient.

In some embodiments, the method may include positioning a customized patient-specific cutting block in contact with the bone of the patient. The method may also include inserting the first end of the one or more surgical guide pins through one or more guide pin holes defined in the customized patient-specific cutting block and into the bone of the patient. The method may further include removing the customized patient-specific cutting block from the bone of the patient without removing the one or more surgical guide pins from the bone of the patient.

According to one aspect, a customized patient-specific orthopaedic instrument is disclosed. The customized patient-specific orthopaedic instrument may include a customized patient-specific femoral cutting block that may include a body having a bone-facing surface having a customized patient-specific negative contour configured to receive a portion of an anterior side of a patient's femur that has a corresponding positive contour. The customized patient-specific orthopaedic instrument may also include at least one tab extending posteriorly from the body, the at least one tab having a bone-facing surface having a customized patient-specific negative contour configured to receive a portion of the distal side of the patient's femur that has a corresponding positive contour. The customized patient-specific orthopaedic instrument may include a lip extending superiorly from an end of the at least one tab, the lip having a bone-facing surface having a customized patient-specific negative contour configured to receive a portion of the posterior side of the patient's femur that has a corresponding position contour.

In some embodiments, the customized patient-specific femoral cutting block may include a first tab extending posteriorly from the body and a second tab extending posteriorly from the body. Each of the first tab and the second tab may have a customized patient-specific negative contour configured to receive a respective portion of the distal end of the patient's femur that has a corresponding positive contour, and the first tab and the second tab defining an opening therebetween. In some embodiments, the customized patient-specific femoral cutting block may include a first lip extending superiorly from an end of the first tab and a second lip extending superiorly from an end of the second tab, each of the first tab and the second tab having a customized patient-specific negative contour configured to receive a respective portion of the posterior side of the patient's femur that has a corresponding positive contour.

In some embodiments, the first tab may extend posteriorly from the body a first distance and the second tab may extend posteriorly form the body a second distance, the first and second distances being substantially different. In some embodiments, the body of the customized patient-specific femoral cutting block may define a vertical plane and the first tab and second tab may extend obliquely from the body with respect to the vertical plane. Additionally, in some embodiments, the body of the customized patient-specific femoral cutting block may include a cutting slot defined therein, the cutting slot being positioned to allow a surgeon to perform a distal cut on the patient's femur using the cutting slot.

In some embodiments, the customized patient-specific femoral cutting block may include a cutting guide coupled to the body, the cutting guide having a cutting slot defined therein, the cutting guide being formed from a material different from the body and being positioned to allow a surgeon to perform a distal cut on the patient's femur using the cutting slot. In some embodiments, the cutting guide may be formed from a metallic material and overmolded to the body of the customized patient-specific femoral cutting block.

In some embodiments, the customized patient-specific femoral cutting block may include a plurality of anterior guide pin bushings coupled to the body, each of the anterior guide pin bushings being formed from a material different from the body and having a passageway defined therethrough sized to receive a corresponding guide pin. In some embodiments, the body of the customized patient-specific femoral cutting block may include a plurality of passageways extending therethrough, each of the plurality of anterior guide pin bushings being received in a corresponding passageway of the plurality of passageways and positioned such that a bone-facing end of each anterior guide pin bushing is recessed with respect to the bone-facing surface of the body.

In some embodiments, one of the plurality of passageways may be oblique with respect to the other plurality of passageways. In some of the embodiments, each of the passageways of the body of the customized patient-specific femoral cutting block may be counterbored on the bone-facing surface. In some embodiments, the customized patient-specific femoral cutting block may include a distal guide pin bushing coupled to the at least one tab, the distal guide pin bushing being formed from a material different from the at least one tab and having a passageway defined therethrough sized to receive a corresponding guide pin. In some embodiments, the body of the customized patient-specific femoral cutting block may include an opening defined therein, the opening extending superiorly from the cutting guide to a point on the body that is more superior than the superior-most point of each of the plurality of anterior guide pin bushings.

In some embodiments, the at least one tab may include a groove extending laterally across the bone-facing side of the at least one tab, the groove and the cutting guide defining a transverse plane. In some embodiments, the customized patient-specific femoral cutting block may include a post extending anteriorly from the body, the post including a

passageway defined therein, the passageway extending through the post to the bone-facing surface of the body and being sized to receive a corresponding guide pin. In some embodiments, the body of the customized patient-specific femoral cutting block may include an outer surface opposite the bone-facing surface, the outer surface including a recessed area. In some embodiments, the customized patient-specific femoral cutting block may include an arcuate bracket extending from the body, the arcuate bracket including a posterior bone-facing surface having a negative contour configured to receive a portion of the posterior side of the patient's femur that has a corresponding positive contour. Additionally, in some embodiments, the body of the customized patient-specific femoral cutting block may include an outer surface opposite the bone-facing surface. The outer surface may include a recessed area sized to receive an end of a surgeon's finger. The recessed area may correspond to a location on the body at which pressure is to be applied to couple the customized patient-specific femoral cutting block to the patient's femur.

According to another aspect, the customized patient-specific orthopaedic instrument may include a customized patient-specific tibial cutting block that may include a body having a bone-facing surface having a customized patient-specific negative contour configured to receive a portion of an anterior side of a patient's tibia that has a corresponding contour and a portion of a medial side of the patient's tibia that has a corresponding contour such that an angle greater than zero is defined between a vertically-extending, bisecting plane of the body and a bisecting saggital plane of the patient's tibia when the portions of the patient's tibia are received in the customized patient-specific negative contour of the body. The body may also include at least one tab extending posteriorly from the body, the at least one tab having a bone-facing surface having a customized patient-specific negative contour configured to receive a portion of the proximal side of the patient's tibia that has a corresponding contour.

In some embodiments, the customized patient-specific tibial cutting block may include a first tab extending posteriorly from the body and a second tab extending posteriorly from the body, each of the first tab and the second tab having a bone-facing surface having a customized patient-specific negative contour configured to receive a respective portion of the proximal end of the patient's tibia that has a corresponding contour, the first tab and the second tab defining an opening therebetween. In some embodiments, each of the first tab and second tab may include an enclosed elongated opening defined therein.

In some embodiments, the body of the customized patient-specific tibial cutting bock may include a superior end and an outer surface opposite the bone-facing surface of the body. The superior end may include a notch defined therein and the notch extending from the outer surface to the bone-facing surface of the body. In some embodiments, the first tab may extend posteriorly from the body a first distance and the second tab may extend posteriorly form the body a second distance, the first and second distances being substantially different.

In some embodiments, the body of the customized patient-specific tibial cutting block may define a vertical plane and the first tab and second tab extend obliquely from the body with respect to the vertical plane. In some embodiments, the first tab may have a maximum thickness and the second tab may have a maximum thickness, the maximum thickness of the first tab being greater than the maximum thickness of the second tab. In some embodiments, the body of the customized patient-specific tibial cutting block may include a cutting slot defined therein, the cutting slot being positioned to allow a surgeon to perform a proximal cut on the patient's femur using the cutting slot.

In some embodiments, the customized patient-specific tibial cutting block may include a cutting guide coupled to the body, the cutting guide having a cutting slot defined therein, the cutting guide being formed from a material different from the body and being positioned to allow a surgeon to perform a distal cut on the patient's femur using the cutting slot. In some embodiments, the cutting guide may be formed from a metallic material and overmolded to the body of the customized patient-specific tibial cutting block. In some embodiments, the customized patient-specific tibial cutting block may include an outer surface opposite the bone-facing surface and a ledge extending outwardly from the outer surface, the ledge having a top surface coplanar with a bottom surface of the cutting slot of the cutting guide.

In some embodiments, the customized patient-specific tibial cutting block may include a plurality of anterior guide pin bushings coupled to the body, each of the anterior guide pin bushings being formed from a material different from the body and having a passageway defined therethrough sized to receive a corresponding guide pin. In some embodiments, the body of the customized patient-specific tibial cutting block includes a plurality of passageways extending therethrough, each of the plurality of anterior guide pin bushings being received in a corresponding passageway of the plurality of passageways and positioned such that a bone-facing end of each anterior guide pin bushing is recessed with respect to the bone-facing surface of the body. In some embodiments, one of the plurality of passageways may be oblique with respect to the other plurality of passageways.

In some embodiments, each of the passageways of the body of the customized patient-specific tibial cutting block may be counterbored on the bone facing surface. Additionally, in some embodiments, the customized patient-specific tibial cutting block may include a proximal guide pin bushing coupled to the at least one tab, the proximal guide pin bushing being formed from a material different from the at least one tab and having a passageway defined therethrough sized to receive a corresponding guide pin. In some embodiments, the body of the customized patient-specific tibial cutting block may include an outer surface opposite the bone-facing surface, the outer surface including a recessed area.

In some embodiments, the angle defined between the vertically-extending, bisecting plane of the body and the bisecting sagittal plane of the patient's tibia may be between ten degrees and thirty degrees. Additionally, in some embodiments, the angle defined between the vertically-extending, bisecting plane of the body and the bisecting sagittal plane of the patient's tibia may be about twenty degrees. In some embodiments, the tab may have a decreasing thickness in the anterior-to-posterior direction. In some embodiment, the at least one tab has a top surface that may have a concave cross-section in the sagittal plane. In some embodiments, a portion of the customized patient-specific negative contour of the bone-facing surface of the body substantially may define a compound angle. In some embodiments, the bone-facing surface of the at least one tab may include a central recess to define a rim therearound, the customized patient-specific negative contour of the bone facing surface of the at least one tab being defined on the rim.

According to another aspect, a customized patient-specific orthopaedic instrument is disclosed. A customized patient-specific orthopaedic instrument is a customized patient-specific cutting block. The customized patient-specific cutting block may have a bone-facing surface including a negative contour configured to receive a portion of a patient's bone having a corresponding contour, the negative contour being scaled with respect to the contour of the patient's bone by a predetermined amount based on the thickness of the cartilage present on the patient's bone.

According to one aspect, a customized patient-specific orthopaedic instrument is disclosed. The customized patient-specific orthopaedic instrument includes a customized patient-specific cutting block. The customized patient-specific cutting block may include an anterior body piece, an end body piece that is separate from the anterior body piece, and a number of fasteners securing the anterior body piece and the end body piece to one another. In some embodiments, the customized patient-specific cutting block may be a customized patient-specific femoral cutting block. Additionally, in some embodiments, the customized patient-specific cutting block may be a customized patient-specific tibial cutting block.

The anterior body piece may include a bone-facing surface, an outer surface opposite the bone-facing surface, and a cutting guide. The bone-facing surface may have a customized patient-specific negative contour configured to receive a portion of an anterior side of a bone of a patient that has a corresponding contour. In some embodiments, the anterior body piece of the customized patient-specific cutting block further may include a pair of guide pin holes that extend from the outer surface to the bone-facing surface. In some embodiments, the cutting guide of the anterior body piece may be a captured cutting guide.

The end body piece may include a bone-facing surface and an outer surface opposite the bone-facing surface. The bone-facing surface may have a customized patient-specific negative contour configured to receive a portion of the bone of the patient that has a corresponding contour. In some embodiments, the end body piece may include a pair of guide pin holes defined therein that extend from the outer surface to the bone-facing surface.

In some embodiments, the number of fasteners includes a number of pins. The anterior body piece and the end body piece may each have a number of holes. The number of pins may be positioned in the number of holes defined in the anterior body piece and the number of holes defined in the end body piece so as to secure the anterior body piece and the end body piece to one another.

According to another aspect, a method of performing an orthopaedic surgical procedure on a bone of a patient is disclosed. The method may include inserting an anterior body piece of a customized patient-specific cutting block through an incision. The method may also include inserting an end body piece of the customized patient-specific cutting block through the incision, the end body piece being separate from the anterior body piece. The method may include securing the anterior body piece and the end body piece to one another subsequent to the insertion of both pieces to create an assembled customized patient-specific cutting block. In some embodiments, the anterior body piece and the end body piece may be secured to one another with a number of pins.

The method may include positioning the assembled customized patient-specific cutting block in contact with the bone of the patient and making a cut in the bone of the patient with the assembled customized patient-specific cutting block. In some embodiments, the method may include positioning the assembled customized patient-specific cutting block in contact with the femur of the patient. The method may also include making a cut in the femur of the patient with the assembled customized patient-specific cutting block. Additionally, in some embodiments, the method may include positioning the assembled customized patient-specific cutting block in contact with the tibia of the patient. The method may also include making a cut in the tibia of the patient with the assembled customized patient-specific cutting block. In some embodiments, the method may also include inserting a pair of guide pins into a pair of guide pin holes defined in the assembled customized patient-specific cutting block prior to making the cut in the bone of the patient.

According to another aspect, a customized patient-specific orthopaedic instrument is disclosed. The customized patient-specific orthopaedic instrument may have a customized patient-specific cutting block that includes a body. In some embodiments, the customized patient-specific cutting block may be a customized patient-specific femoral cutting block. Additionally, in some embodiments, the customized patient-specific cutting block may be a customized patient-specific tibial cutting block.

The body may have a bone-facing surface, an outer surface opposite the bone-facing surface, and a non-captured cutting guide. The bone-facing surface may have a customized patient-specific negative contour configured to receive a portion of an anterior side of a bone of a patient that has a corresponding contour. In some embodiments, the body of the customized patient-specific cutting block may have a pair of guide pin holes defined therein that extend from the outer surface to the bone-facing surface. The non-captured cutting guide may be defined by a sidewall extending from the outer surface to the bone-facing surface.

According to one aspect, a customized patient-specific orthopaedic instrument is disclosed. The customized patient-specific orthopaedic instrument may include a cutting block that has an anterior bone-facing surface and a distal bone-facing surface.

The anterior bone-facing surface may be configured to receive a portion of an anterior side of a bone of a patient. The anterior bone-facing surface may include a first flat surface that extends distally in a direction away from the proximal-most edge of the bone cutting block and toward the distal bone-facing surface of the cutting block. The anterior bone-facing surface may include an anterior customized patient-specific negative contour surface that extends distally away from the first flat surface, the anterior customized patient-specific negative contour surface being configured to receive the portion of the anterior side of the bone of the patient that has a corresponding contour. The anterior bone-facing surface may also include a second flat surface that extends distally from the anterior customized patient-specific negative contour surface toward the distal bone-facing surface

The distal bone-facing surface may be configured to receive a portion of a distal side of the bone of the patient. The distal bone-facing surface may include a first flat surface that extends posteriorly in a direction away from the anterior bone-facing surface of the bone cutting block and toward the posterior-most edge of the cutting block. The distal bone-facing surface may include a distal customized patient-specific negative contour surface that extends posteriorly away from the first flat surface, the distal customized patient-specific negative contour surface being configured to receive the portion of the distal side of the bone of the patient

that has a corresponding contour. The distal bone-facing surface may also include a second flat surface that extends posteriorly from the distal customized patient-specific negative contour surface toward the posterior-most edge of the cutting block.

In some embodiments, the cutting block may be generally L-shaped and may have an anterior plate and a distal plate secured to, and extending away from, the anterior plate. The anterior bone-facing surface may be defined in the anterior plate and the distal bone-facing surface may be defined in the distal place.

In some embodiments, the anterior plate may have a distal cutting guide extending through the anterior plate. Additionally, in some embodiments, the distal plate may have both an anterior cutting guide and a posterior cutting guide extending through the distal plate. In some embodiments, the distal plate may have a pair of angled cutting guides extending through the distal plate. In some embodiments, the distal plate may have an anterior cutting guide extending through the distal plate. In some embodiments, the distal plate may have a posterior cutting guide extending through the distal plate.

In some embodiments, the first flat surface of the anterior bone-facing surface may transition to the anterior customized patient-specific negative contour surface. The anterior customized patient-specific negative contour surface may transition to the second flat surface of the anterior bone-facing surface. Additionally, in some embodiments, the first flat surface of the distal bone-facing surface may transition to the distal customized patient-specific negative contour surface. The distal customized patient-specific negative contour surface may transition to the second flat surface of the distal bone-facing surface.

According to another aspect, a method of performing an orthopaedic surgical procedure on a bone of a patient is disclosed. The method may include securing a customized patient-specific cutting block to the bone of the patient such that an anterior side of the bone of the patient is received into an anterior customized patient-specific negative contour surface of the cutting block and a distal side of the bone of the patient is received into a distal customized patient-specific negative contour surface of the cutting block. The method may include making an anterior cut in the bone of the patient with the cutting block such that a flat surface is formed on the anterior side of the bone of the patient and making a distal cut in the bone of the patient with the cutting block such that a flat surface is formed on the distal side of the bone of the patient. The method may also include determining an amount of additional bone to be removed from the bone of the patient subsequent to making the anterior cut and the distal cut in the bone of the patient.

The method may include securing the customized patient-specific cutting block to the bone of the patient such that the flat surface formed in the anterior side of the bone of the patient is positioned against at least one flat surface formed in an anterior bone-facing surface the cutting block and the flat surface formed in the distal side of the bone of the patient is positioned against at least one flat surface formed in a distal bone-facing surface the cutting block. The method may further include making at least one of an additional anterior cut in the bone of the patient with the cutting block such that additional bone is removed from the flat surface formed on the anterior side of the bone of the patient and an additional distal cut in the bone of the patient with the cutting block such that additional bone is removed from the flat surface formed on the distal side of the bone of the patient.

In some embodiments, the method may include securing the customized patient-specific cutting block to a femur of the patient such that an anterior side of the femur of the patient is received into the anterior customized patient-specific negative contour surface of the cutting block and a distal side of the femur of the patient is received into the distal customized patient-specific negative contour surface of the cutting block. In some embodiments, the method may include making both an additional anterior cut in the bone of the patient with the cutting block such that additional bone is removed from the flat surface formed on the anterior side of the bone of the patient and an additional distal cut in the bone of the patient with the cutting block such that additional bone is removed from the flat surface formed on the distal side of the bone of the patient.

According to another aspect, a customized patient-specific orthopaedic instrument is disclosed. The customized patient-specific orthopaedic instrument may include a cutting block having an anterior customized patient-specific negative contour surface that is configured to receive a portion of the anterior side of the bone of the patient that has a corresponding contour. The cutting block may have a distal customized patient-specific negative contour surface that is configured to receive a portion of the distal side of the bone of the patient that has a corresponding contour. The cutting block may also have a posterior customized patient-specific negative contour surface that is configured to receive a portion of the posterior side of the bone of the patient that has a corresponding contour.

In some embodiments, the cutting block may be generally U-shaped and have an anterior plate, a distal plate, and a posterior plate. The anterior bone-facing surface may be defined in the anterior plate, the distal bone-facing surface may be defined in the distal plate, and the posterior bone-facing surface is defined in the posterior plate.

In some embodiments, the anterior plate may have a distal cutting guide extending through the anterior plate. Additionally, in some embodiments, the distal plate may have both an anterior cutting guide and a posterior cutting guide extending through the distal plate. In some embodiments, the distal plate may have a pair of angled cutting guides extending through the distal plate. In some embodiments, the distal plate may have an anterior cutting guide extending through the distal plate. In some embodiments, the distal plate may have a posterior cutting guide extending through the distal plate.

According to one aspect, an orthopaedic instrument assembly is disclosed. The orthopaedic instrument assembly may include a customized patient-specific femoral cutting block, a customized patient-specific tibial cutting block, and a mechanical linkage positioned between the customized patient-specific femoral cutting block and the customized patient-specific tibial cutting block. The customized patient-specific femoral cutting block may include a customized patient-specific negative contour surface that is configured to receive a portion of a distal femur of a patient that has a corresponding contour and a cutting guide. The customized patient-specific tibial cutting block may include a customized patient-specific negative contour surface that is configured to receive a portion of a proximal tibia of a patient that has a corresponding contour and a cutting guide. The mechanical linkage may be operable to move the customized patient-specific femoral cutting block and the customized patient-specific tibial cutting block away from and toward one another.

In some embodiments, the mechanical linkage may include a number of threaded shafts. The rotation of the

threaded shafts in a first direction may cause the customized patient-specific femoral cutting block and the customized patient-specific tibial cutting block to be moved away from one another. The rotation of the threaded shafts in a second, opposite direction may cause the customized patient-specific femoral cutting block and the customized patient-specific tibial cutting block to be moved toward one another.

In some embodiments, the mechanical linkage may include a number of thumbscrews coupled to the number of threaded shafts. The rotation of the thumbscrews in the first direction may cause rotation of the threaded shafts in the first direction. The rotation of the thumbscrews in the second direction may cause rotation of the threaded shafts in the second direction.

In some embodiments, the mechanical linkage may include a number of thumbscrews. The rotation of the thumbscrews in a first direction may cause the customized patient-specific femoral cutting block and the customized patient-specific tibial cutting block to be moved away from one another. The rotation of the thumbscrews in a second, opposite direction may cause the customized patient-specific femoral cutting block and the customized patient-specific tibial cutting block to be moved toward one another.

In some embodiments, both the customized patient-specific femoral cutting block and the customized patient-specific tibial cutting block have a number of guide pin holes. In some embodiments, the cutting guide of the customized patient-specific femoral cutting block is substantially parallel to the cutting guide of the customized patient-specific tibial cutting block.

According to another aspect, the orthopaedic instrument assembly may include a customized patient-specific femoral cutting block and a ligament balancer secured to the femoral cutting block. The customized patient-specific femoral cutting block may have a customized patient-specific negative contour surface that is configured to receive a portion of a distal femur of a patient that has a corresponding contour and a cutting guide. The ligament balancer may have a tibial base plate and a pair of femoral paddles each of which is movable relative to the tibial base plate.

In some embodiments, the orthopaedic instrument assembly may include a bracket having a first end secured to the femoral cutting block and a second end secured to the ligament balancer. Additionally, in some embodiments, the second end of the bracket may be secured to the tibial base plate of the ligament balancer. In some embodiments, the first end of the bracket may have a pair of guide pin holes defined therein. In some embodiments, the bracket may have a first end secured to the femoral cutting block and a second end secured to the ligament balancer. The bracket may also have a receiver configured to receive an intramedullary rod.

In some embodiments, the customized patient-specific femoral cutting block may include a customized patient-specific anterior bone-facing surface configured to receive a portion of an anterior side of a femur of a patient and a customized patient-specific distal bone-facing surface configured to receive a portion of a distal side of the femur of the patient. In some embodiments, the ligament balancer has a pair of cylinders secured to the tibial base plate and each of the pair of femoral paddles is received into a respective one of the pair of cylinders.

According to another aspect, a method of an orthopaedic surgical procedure on a patient is disclosed. The method may include securing a customized patient-specific femoral cutting block to the femur of the patient and securing a ligament balancer to the tibia of the patient. The method may include securing the ligament balancer to the customized patient-specific femoral cutting block. The method may also include operating the ligament balancer to position the femur of the patient in a desired position relative to the tibia. The method may further include making a cut in the femur of the patient with the customized patient-specific cutting block.

In some embodiments, the securing of the customized patient-specific femoral cutting block may include positioning the customized patient-specific femoral cutting block in contact with the femur of the patient. The method may also include inserting at least one guide pin into at least one guide pin hole defined in the customized patient-specific femoral cutting block so as to secure the customized patient-specific femoral cutting block to the femur of the patient.

In some embodiments, the method may include the ligament balancer having a first end of a bracket secured thereto. The second end of the bracket may have at least one guide pin hole defined therein. The method may also include advancing the at least one guide pin into the at least one guide pin hole of the bracket so as to secure the second end of the bracket to the customized patient-specific femoral cutting block. In some embodiments, the method the ligament balancer having a first end of a bracket secured thereto and securing a second end of the bracket to the customized patient-specific femoral cutting block. Additionally, in some embodiments, the method may include independently moving each of a pair of femoral paddles of the ligament balancer.

According to one aspect, an orthopaedic instrument assembly is disclosed. The orthopaedic instrument assembly includes a femoral cutting block and a tibial cutting block. The femoral cutting block may include a negative contour surface that is configured to receive a portion of a distal femur of a patient, a cutting guide, and a pair of trial condylar surfaces formed in the distal end of the femoral cutting block. In some embodiments, the negative contour surface of the femoral cutting block may include a customized patient-specific negative contour surface that is configured to receive a portion of a distal femur of a patient that has a corresponding contour. In some embodiments, the pair of trial condylar surfaces formed in the distal end of the femoral cutting block may include a medial condylar surface having a concave outer profile which resembles a natural medial condyle of a femur and a lateral condylar surface having a concave outer profile which resembles a natural lateral condyle of the femur.

The tibial cutting block may have a negative contour surface that is configured to receive a portion of a proximal tibia of the patient, a cutting guide, and a pair of trial articular surfaces formed in the proximal end of the tibial cutting block, the pair of trial articular surfaces being configured to receive the pair of trial condylar surfaces formed in the distal end of the femoral cutting block. In some embodiments, the negative contour surface of the tibial cutting block may include a customized patient-specific negative contour surface that is configured to receive a portion of a proximal tibia of a patient that has a corresponding contour. In some embodiments, the pair of trial articular surfaces formed in the proximal end of the tibial cutting block may include a medial articular surface having a convex outer profile which resembles a natural articular surface of a medial condyle of a tibia and a lateral articular surface having a convex outer profile which resembles a natural articular surface of a lateral condyle of a tibia.

In some embodiments, both the femoral cutting block and the tibial cutting block may have a number of guide pin holes defined therein. In some embodiments, the cutting

guide of the femoral cutting block may be substantially parallel to the cutting guide of the tibial cutting block.

According to another aspect, a customized patient-specific orthopaedic instrument is disclosed. The customized patient-specific orthopaedic instrument may include a customized patient-specific cutting block having a body having a femoral-facing surface having a customized patient-specific negative contour configured to receive a portion of a femur of a patient that has a corresponding contour. The customized patient-specific cutting block may also have a tibial-facing surface having a customized patient-specific negative contour configured to receive a portion of a tibia of the patient that has a corresponding contour. The customized patient-specific cutting block may further have an outer surface opposite the femoral-facing surface and the tibial-facing surface and at least one cutting guide.

In some embodiments, the body of the customized patient-specific cutting block may have a tibial guide pin hole extending through the body from the outer surface to the tibial-facing surface. Additionally, in some embodiments, the at least one cutting guide may include a tibial cutting guide extending through the body from the outer surface to the tibial facing surface.

In some embodiments, the body of the customized patient-specific cutting block further may have a femoral guide pin hole extending through the body from the outer surface to the femoral-facing surface. Additionally, in some embodiments, the at least one cutting guide may include a femoral cutting guide extending through the body from the outer surface to the femoral-facing surface.

In some embodiments, the body of the customized patient-specific cutting block may include an elongated tongue positioned between the femoral-facing surface and the tibial-facing surface and extending in a general direction away from the outer surface. In some embodiments, the body of the customized patient-specific cutting block may define a monolithic body.

According to another aspect, a method of performing an orthopaedic surgical procedure on a knee of a patient may include securing a customized patient-specific cutting block to the knee of the patient such that a portion of a femur of the patient is received into a femoral-facing surface having a customized patient-specific negative contour and a portion of a tibia of the patient is received into a tibial-facing surface having a customized patient-specific negative contour. The method may also include making a cut in at least one of the tibia of the patient and the femur of the patient with the customized patient-specific cutting block. In some embodiments, the method may include making a cut in the femur of the patient with the customized patient-specific cutting block. In some embodiments, the method may include making a cut in the tibia of the patient with the customized patient-specific cutting block.

In some embodiments, the method may include inserting a guide pin through a tibial guide pin hole and into the tibia of the patient. In some embodiments, the method may include inserting a guide pin through a femoral guide pin hole and into the femur of the patient.

According to one aspect, a customized patient-specific orthopaedic instrument is disclosed. The customized patient-specific orthopaedic instrument may include a customized patient-specific cutting block having a body. In some embodiments, the customized patient-specific cutting block may be a customized patient-specific femoral cutting block. Additionally, in some embodiments, the customized patient-specific cutting block may be a customized patient-specific tibial cutting block.

The body may include a bone-facing surface having a customized patient-specific negative contour configured to receive a portion of a bone of a patient that has a corresponding contour and an outer surface opposite the bone-facing surface. The body may also include a first cutting guide corresponding to a predetermined customized patient-specific cutting plane and a second cutting guide that is parallel to the first cutting guide and spaced apart from the first cutting guide by a predetermined distance. In some embodiments, the body of the customized patient-specific cutting block may have at least one guide pin hole defined therein that extends from the outer surface to the bone-facing surface.

In some embodiments, the second cutting guide may be usable to remove a greater amount of the bone of the patient relative to the first cutting guide when the customized patient-specific cutting block is secured to the bone of the patient. In some embodiments, the customized patient-specific orthopaedic instrument may include a breakaway tab covering the second cutting guide. In some embodiments, the breakaway tab may be transparent.

In some embodiments, the body of the customized patient-specific cutting block may include a third cutting guide. The third cutting may be parallel to the first cutting guide and spaced apart from the first cutting guide by the predetermined distance, and the first cutting guide may be positioned between the second cutting guide and the third cutting guide. In some embodiments, the third cutting guide may be usable to remove a lesser amount of the bone of the patient relative to the first cutting guide when the customized patient-specific cutting block is secured to the bone of the patient. In some embodiments, a first transparent breakaway tab may cover the second cutting guide. In some embodiments, a second transparent breakaway tab may cover the third cutting guide.

According to another aspect, the customized patient-specific orthopaedic instrument may include a customized patient-specific cutting block and a plurality of insert blocks each of which is configured to be received into the aperture of the customized patient-specific cutting block. The customized patient-specific cutting block may have a body that includes a bone-facing surface having a customized patient-specific negative contour configured to receive a portion of a bone of a patient that has a corresponding contour and an outer surface opposite the bone-facing surface. An aperture may extend through the body.

Each of the plurality of insert blocks may have a cutting guide defined therein. In some embodiments, a first insert block of the plurality of insert blocks may include a first cutting guide corresponding to a predetermined customized patient-specific cutting plane when the first insert block is positioned in the aperture of the customized patient-specific cutting block. A second insert block of the plurality of insert blocks may include a second cutting guide. When the second insert block is positioned in the aperture of the customized patient-specific cutting block, the second cutting guide may be arranged in a parallel relationship relative to the orientation in which the first cutting guide is arranged when the first insert block is positioned in the aperture of the customized patient-specific cutting block and positioned in a position that is spaced apart by a first predetermined distance from the position in which the first cutting guide is positioned when the first insert block is positioned in the aperture of the customized patient-specific cutting block. In some embodiments, the second cutting guide may be usable to remove a greater amount of the bone of the patient relative to the first cutting guide.

In some embodiments, a third insert block of the plurality of insert blocks includes a third cutting guide. When the third insert block is positioned in the aperture of the customized patient-specific cutting block, the third cutting guide is arranged in a parallel relationship relative to the orientation in which the first cutting guide is arranged when the first insert block is positioned in the aperture of the customized patient-specific cutting block and positioned in a position that is spaced apart by a second predetermined distance from the position in which the first cutting guide is positioned when the first insert block is positioned in the aperture of the customized patient-specific cutting block, the second predetermined distance being greater than the first predetermined distance.

In some embodiments, a first insert block of the plurality of insert blocks may be rectangular in shape and may include a first cutting guide which extends through the center of the first insert block in the direction of the long axis of the first insert block. A second insert block of the plurality of insert blocks may be rectangular in shape and may include a second cutting guide which extends in the direction of the long axis of the second insert block at a positioned that is spaced apart from the center of the second insert block.

In some embodiments, the body of the customized patient-specific cutting block may have at least one guide pin hole defined therein that extends from the outer surface to the bone-facing surface. In some embodiments, the customized patient-specific cutting block may be a customized patient-specific femoral cutting block. Additionally, in some embodiments, the customized patient-specific cutting block may be a customized patient-specific tibial cutting block.

Further, in some embodiments, a first block of the plurality of insert blocks may include a first cutting guide. The first block may be positionable in the aperture in a first orientation and a second orientation. The first cutting guide may be offset from a longitudinal axis of the first block such the first cutting guide defines a first cutting plane when in the first orientation and a second cutting plane within the second orientation. The first cutting guide may be usable by a surgeon when in the first orientation to remove a greater amount of the bone of the patient relative to the first cutting guide when in the second orientation.

According to another aspect, a customized patient-specific orthopaedic instrument may comprise a customized patient-specific cutting block having a body. The body may include a bone-facing surface having a customized patient-specific negative contour configured to receive a portion of a bone of a patient that has a corresponding positive contour, an outer surface opposite the bone-facing surface, an aperture extending through the body, and an adjustable cutting guide positioned in the aperture. The adjustable cutting guide may correspond to a cutting plane of the bone of the patient and may be movable within the aperture to modify the position of the cutting plane. IN some embodiments, the body may include a thumbwheel coupled to the adjustable cutting guide. In such embodiments, the thumbwheel may be operable to move the adjustable cutting guide.

According to one aspect, a customized patient-specific cutting block is disclosed. The customized patient-specific cutting block may include a cutting block body, a plurality of guide pins, and a securing device. In some embodiments, customized patient-specific cutting block may be a customized patient-specific femoral cutting block. In some embodiments, the customized patient-specific cutting block may be a customized patient-specific tibial cutting block. The cutting block body may include a bone facing surface, an outer surface opposite the bone-facing surface, a plurality of guide pin holes formed in the body of the cutting block, and a cutting guide extending through the cutting block body.

The plurality of guide pins that may be respectively positioned in one of the plurality of guide pin holes. Each of the plurality of guide pins may include a bone-contacting end that extends out of the bone-facing surface of the cutting block body and may be movable relative to the cutting block body such that the bone-contacting ends of the plurality of guide pins collectively create a customized patient-specific negative contour configured to receive a portion of a bone of a patient that has a corresponding contour. The securing device may be operable to lock each of the plurality of guide pins in a desired position so as to create the customized patient-specific negative contour. In some embodiments, each of the plurality of guide pins may also include an outer end that extends out of the outer surface of the cutting block body. In some embodiments, each of the plurality of guide pins may be independently movable relative to each other.

According to another aspect, a customized patient-specific orthopaedic instrument is disclosed. The customized patient-specific orthopaedic instrument includes a customized patient-specific cutting block and an electronic programming device. The customized patient-specific cutting block may have a body with a cutting guide extending therethrough and a plurality of guide pins, each of which includes a bone-contacting end that extends out of the body of the cutting block.

Each of the plurality of guide pins may also be movable relative to the body of the cutting block such that the bone-contacting ends of the plurality of guide pins collectively create a customized patient-specific negative contour configured to receive a portion of a bone of a patient that has a corresponding contour. In some embodiments, the customized patient-specific cutting block may include a securing device operable to lock each of the plurality of guide pins in the desired position. In some embodiments, each of the plurality of guide pins may be independently movable relative to each other.

The electronic programming device may include a housing having an aperture formed therein and one or more electrically-operated actuators operable to position each of the plurality of guide pins in a desired position so as to create the customized patient-specific negative contour. The aperture may be configured to receive the customized patient-specific cutting block therein. In some embodiments, the electronic programming device further may include a coupler configured to operate the securing device of the customized patient-specific cutting block.

In some embodiments, the electronic programming device may include a plurality of holes each of which is configured to receive one of the plurality of guide pins of the customized patient-specific cutting block. One of a plurality of push rods may be located in each of the holes. One or more electrically-operated actuators may be operable to position the plurality of push rods in a respective position so as to position each of the plurality of guide pins in the desired position.

In some embodiments, the electronic programming device may also include a processor and a memory device electrically coupled to the processor. The memory device may have stored therein a plurality of instructions which, when executed by the processor, cause the processor to operate the one or more electrically-operated actuators to position each of the plurality of guide pins in the desired position. In some embodiments, the electronic programming device may include an input port electrically coupled to the memory device.

In some embodiments, each of the plurality of guide pins may be independently movable relative to each other. In some embodiments, customized patient-specific cutting block may be a customized patient-specific femoral cutting block. In some embodiments, the customized patient-specific cutting block may be a customized patient-specific tibial cutting block.

According to one aspect, a method for a vendor to create a customized patient-specific orthopaedic instrument for a patient of a healthcare facility that is external to the vendor is disclosed. The method may include receiving an instrument request that includes data relevant to the patient from the healthcare facility external to the vendor. In some embodiments, the data of the instrument request may include one or more medical images that depict at least one bone of the patient. Receiving may include receiving the instrument request that includes the one or more medical images.

The method may also include creating a design plan that has been customized for the patient per data of the instrument request in response to receiving the instrument request. In some embodiments, the design plan may be created based upon one or more medical images that depict at least one bone of the patient. The method may include sending the design plan to the healthcare facility. Sending may include transmitting the design plan to the healthcare facility via a network. Second may also include mailing the design plan to the healthcare facility.

The method may further include operating a milling machine located at the healthcare facility to fabricate the customized patient-specific orthopaedic instrument per data of the design plan. In some embodiments, the method may include generating a plurality of instructions for the design plan that are executed by a processor of the milling machine to fabricate the customized patient-specific orthopaedic instrument. In some embodiments, the method may include generating the plurality of instructions based upon one or more medical images that depict at least one bone of the patient.

In some embodiments, operating may include operating the milling machine located at the healthcare facility to fabricate a customized patient-specific cutting block per data of the design plan. In some embodiments, operating may include operating the milling machine located at the healthcare facility to fabricate a customized patient-specific femoral cutting block per data of the design plan. Additionally, in some embodiments, operating may include operating the milling machine located at the healthcare facility to fabricate a customized patient-specific tibial cutting block per data of the design plan.

According to another aspect, a system for creating a customized patient-specific orthopaedic instrument for a patient of a healthcare facility is disclosed. The system may include a client to generate an instrument request that includes data relevant to the patient, a design plan system to receive the instrument request and to generate a design plan that has been customized based upon the data of the instrument request, the design plan system being located at a vendor, and a milling machine located at the healthcare facility which is external to the vendor, the milling machine being operable to fabricate the customized patient-specific orthopaedic instrument per data of the design plan generated by the design plan system.

In some embodiments, the design plan system may generate the design plan based upon at least one image of the instrument request. In some embodiments, the client may be communicatively coupled to the design plan system via a network. In some embodiments, the design plan system may be communicatively coupled to the milling machine via a network. In some embodiments, the client may be communicatively coupled to the design plan system via a network.

In some embodiments, the milling machine may be operable to fabricate a customized patient-specific cutting block per data of the design plan generated by the design plan system. In some embodiments, the milling machine may be operable to fabricate a customized patient-specific femoral cutting block per data of the design plan generated by the design plan system. In some embodiments, the milling machine may be operable to fabricate a customized patient-specific tibial cutting block per data of the design plan generated by the design plan system.

According to one aspect, a customized patient-specific orthopaedic instrument assembly is disclosed. The customized patient-specific orthopaedic instrument assembly may include a customized patient-specific cutting block, an ankle brace, and an external alignment rod. In some embodiments, the customized patient-specific cutting block may be a customized patient-specific femoral cutting block. In some embodiments, customized patient-specific cutting block may be a customized patient-specific tibial cutting block. The customized patient-specific cutting block may include a bone-facing surface having a customized patient-specific negative contour configured to receive a portion of an anterior side of a bone of a knee of a patient that has a corresponding contour, an outer surface opposite the bone-facing surface, at least one guide pin hole, and a cutting guide.

The ankle brace may be configured to be secured externally to an ankle of the patient. In some embodiments, the ankle brace may include a rear strap configured to wrap around the posterior side of the ankle of the patient. The external alignment rod may have a first end secured to the customized patient-specific cutting block and a second end secured to the ankle brace. In some embodiments, the alignment rod may be telescoping and may have a first rod which is received into a second rod. In some embodiments, the alignment rod may also include a securing device that is operable to lock the first rod and the second rod in a fixed position relative to one another.

According to another aspect, the customized patient-specific orthopaedic instrument assembly may include a customized patient-specific cutting block, an alignment cord having a first end secured to the customized patient-specific cutting block, and a weight secured to a second end of the alignment cord. The customized patient-specific cutting block may include a bone-facing surface having a customized patient-specific negative contour configured to receive a portion of an anterior side of a bone of a knee of a patient that has a corresponding contour. The customized patient-specific cutting block may also include an outer surface opposite the bone-facing surface, at least one guide pin hole, and a cutting guide. In some embodiments, the customized patient-specific cutting block may be a customized patient-specific femoral cutting block. In some embodiments, customized patient-specific cutting block may be a customized patient-specific tibial cutting block.

In some embodiments, the customized patient-specific cutting block may include an extension rod extending anteriorly from the outer surface thereof, and the first end of the alignment cord may be secured to the extension rod. Additionally, in some embodiments, the alignment cord may extend inferiorly from the extension rod. In some embodiments, the alignment cord may extend inferiorly from the customized patient-specific cutting block.

According to another aspect, the customized patient-specific orthopaedic instrument assembly may include a customized patient-specific cutting block and an external alignment device. The customized patient-specific cutting block may include a bone-facing surface having a customized patient-specific negative contour configured to receive a portion of an anterior side of a bone of a knee of a patient that has a corresponding contour. The customized patient-specific cutting block may also include an outer surface opposite the bone-facing surface, at least one guide pin hole, and a cutting guide. In some embodiments, the customized patient-specific cutting block may be a customized patient-specific femoral cutting block. In some embodiments, customized patient-specific cutting block may be a customized patient-specific tibial cutting block.

The external alignment device may have a first end secured to the customized patient-specific cutting block and second end that extends inferiorly from the customized patient-specific cutting block. In some embodiments, the external alignment device may include an elongated rod. In some embodiments, the external alignment device may include an ankle brace configured to be secured externally to an ankle of the patient. The external alignment device may also include a first end of the elongated rod is secured to the customized patient-specific cutting block and a second end of the elongated rod is secured to the ankle brace. In some embodiments, the elongated rod may be a telescoping rod.

In some embodiments, the external alignment device may include an alignment cord having a first end secured to the customized patient-specific cutting block and a weight secured to a second end of the alignment cord. Additionally, in some embodiments, the customized patient-specific cutting block may have an extension rod extending anteriorly from the outer surface thereof and the first end of the alignment cord may be secured to the extension rod.

According to one aspect, a method for designing a customized patient-specific bone cutting block for use in an orthopaedic surgical procedure to perform a bone cut on a patient's bone is disclosed. The method may include determining a cartilage thickness value indicative of the average thickness of the cartilage present on a relevant end of the patient's bone and determining a reference contour based on a surface contour of the relevant end of the patient's bone. The method may also include generating a scaled reference contour by scaling the reference contour based on the cartilage thickness value. The method may include defining a customized patient-specific negative contour of the customized patient-specific bone cutting block using the scaled reference contour.

In some embodiments, the method may include determining the cartilage thickness value based on the gender of the patient. In some embodiments, the method may include determining a reference contour based on a surface contour of a three-dimensional model of the patient's bone. In some embodiments, the method may include determining a reference point in the three-dimensional model of the patient's bone and increasing the distance between the reference point and a point on the reference contour.

In some embodiments, the method may include generating a first line segment extending from a first point defined on the surface contour of a medial side of the three-dimensional model to a second point defined on the surface contour of a lateral side of the three-dimensional model. The method may include generating a second line segment extending from a third point defined on the surface contour of an anterior side of the three-dimensional model to a fourth point defined on the surface contour of a posterior side of the three-dimensional model, wherein the first, second, third, and forth points are coplanar. The method may include determining a point of intersection between the first line segment and the second line segment, the point of intersection corresponding to the reference point. Determining the reference point may include moving the reference point away from the point of intersection a distance approximately equal to half the length of the second line segment.

In some embodiments, the method may include determining a length value equal to a percentage of the distance between the reference point and the point on the reference contour and increasing the distance between the reference point and the point on the reference contour by the length value. In some embodiments, the method may include determining areas of the relevant end of the patient's bone having a reduced thickness of cartilage and adjusting the scaled reference contour to compensate for the areas of reduced thickness of cartilage of the relevant end of the patient's bone. In some embodiments, determining areas of the relevant end of the patient's bone having the reduced thickness of cartilage may include identifying points of bone-on-bone contact between the patient's femur and the patient's tibia based on a medical image of the femur and tibia.

In some embodiments, adjusting the scaled reference contour may include decreasing the distance between the reference point and a point on the reference contour corresponding to the areas of reduced thickness of cartilage. In some embodiments, reference contour may include an anterior side, a medial side, and a lateral side. Generating the scaled reference contour may include increasing the distance between the reference point and the anterior side and subsequently reducing the distance between the reference point and the medial side and between the reference point and the lateral side.

In some embodiments, the method may include determining a reference contour based on a surface contour of an osteophite of the patient's bone. In some embodiments, the method may include generating a scaled reference contour having a superior end defining a negative contour corresponding to a surface contour of the patient's femur located superiorly to a cartilage demarcation line of the patient's femur. In some embodiments, the method may include generating a scaled reference contour having an inferior end defining a negative contour corresponding to a surface contour of the patient's tibia located inferiorly to a cartilage demarcation line of the patient's tibia.

In some embodiments, the method may include determining a position of a cutting guide of the customized patient-specific cutting block. In some embodiments, the position of the cutting guide may be determined based on an angle defined between a mechanical axis of the patient's femur and a mechanical axis of the patient's tibia.

According to another aspect, a method for generating a customized patient-specific negative contour of a customized patient-specific bone cutting block is disclosed. The method may include determining a cartilage thickness value indicative of the average thickness of the cartilage present on a relevant end of a patient's bone. The method may also include determining a reference contour corresponding to a surface contour of a three-dimensional model of the relevant end of the patient's bone. The method may include determining a reference point in the three-dimensional model of the patient's bone and increasing the distance between the reference point and a point on the reference contour. The method may include defining a customized patient-specific

negative contour of the customized patient-specific bone cutting block using the scaled reference contour.

In some embodiments, determining the reference point may include generating a first line segment extending from a first point defined on the surface contour of a medial side of the three-dimensional model to a second point defined on the surface contour of a lateral side of the three-dimensional model. The method may also include generating a second line segment extending from a third point defined on the surface contour of an anterior side of the three-dimensional model to a fourth point defined on the surface contour of a posterior side of the three-dimensional model, wherein the first, second, third, and forth points are coplanar. The method may include determining a point of intersection between the first line segment and the second line segment, the point of intersection corresponding to the reference point.

In some embodiments, determining the reference point may include moving the reference point away from the point of intersection a distance approximately equal to half the length of the second line segment. In some embodiments, increasing the distance between the reference point and the point on the reference contour may include determining a length value equal to a percentage of the distance between the reference point and the point on the reference contour. In some embodiments, the percentage may be about ten percent. Increasing the distance between the reference point and the point on the reference contour may also include increasing the distance between the reference point and the point on the reference contour by the length value.

In some embodiments, the method may include determining areas of the relevant end of the patient's bone having a reduced thickness of cartilage and adjusting the scaled reference contour to compensate for the areas of reduced thickness of cartilage of the relevant end of the patient's bone. In some embodiments, adjusting the scaled reference contour may include decreasing the distance between the reference point and a point on the reference contour corresponding to the areas of reduced thickness of cartilage.

In some embodiments, the reference contour may include an anterior side, a medial side, and a lateral side. Scaling the reference contour may include increasing the distance between the reference point and the anterior side and subsequently reducing the distance between the reference point and the medial side and between the reference point and the lateral side. In some embodiments, the method may include determining a reference contour based on a surface contour of an osteophite of the patient's bone.

According to another aspect, a method for fabricating a customized patient-specific bone cutting block is disclosed. The method may include determining a cartilage thickness value indicative of the average thickness of the cartilage present on a relevant end of a patient's bone. The method may include determining a reference contour corresponding to a surface contour of the relevant end of a three-dimensional image of the patient's bone. The method may also include generating a scaled reference contour by scaling the reference contour based on the cartilage thickness value. The method may include establishing a customized patient-specific negative contour on a bone cutting block blank based on the scaled reference contour. In some embodiments, the method may include determining areas of the relevant end of the patient's bone having a reduced thickness of cartilage and adjusting the scaled reference contour to compensate for the areas of reduced thickness of cartilage of the relevant end of the patient's bone.

BRIEF DESCRIPTION OF THE DRAWINGS

The detailed description particularly refers to the following figures, in which:

FIG. **1** is a simplified flow diagram of an algorithm for designing and fabricating a customized patient-specific orthopaedic surgical instrument;

FIG. **2** is a simplified flow diagram of a method for generating a model of a patient-specific orthopaedic instrument;

FIG. **3** is a simplified flow diagram of a method for scaling a reference contour;

FIGS. **4-6** are three-dimensional model's of a patient's tibia;

FIG. **7-9** are three-dimensional models of a patient's femur;

FIG. **10** is an elevation view of one embodiment of a customized patient-specific orthopaedic surgical instrument;

FIG. **11** is a perspective view of the customized patient-specific orthopaedic surgical instrument of FIG. **10**;

FIG. **12** is a perspective view of the customized patient-specific orthopaedic surgical instrument of FIG. **10** secured to a bone of a patient;

FIG. **13** is an elevation view of another embodiment of a customized patient-specific orthopaedic surgical instrument;

FIG. **14** is a perspective view of the customized patient-specific orthopaedic surgical instrument of FIG. **13**;

FIG. **15** is a perspective view of the customized patient-specific orthopaedic surgical instrument of FIG. **13** secured to a bone of a patient;

FIG. **16** is an elevation view of another embodiment of a customized patient-specific orthopaedic surgical instrument;

FIG. **17** is a perspective view of the customized patient-specific orthopaedic surgical instrument of FIG. **16**;

FIG. **18** is a is a perspective view of the customized patient-specific orthopaedic surgical instrument of FIG. **16** secured to a bone of a patient;

FIG. **19** is an elevation view of another embodiment of a customized patient-specific orthopaedic surgical instrument;

FIG. **20** is a perspective view of the customized patient-specific orthopaedic surgical instrument of FIG. **19**;

FIG. **21** is a perspective view of the customized patient-specific orthopaedic surgical instrument of FIG. **19** secured to a bone of a patient;

FIG. **22** is a perspective view of another embodiment of the customized patient-specific orthopaedic surgical instrument of FIG. **19** secured to a bone of a patient;

FIG. **23** is an elevation view of another embodiment of a customized patient-specific orthopaedic surgical instrument;

FIG. **24** is a perspective view of the customized patient-specific orthopaedic surgical instrument of FIG. **23**;

FIG. **25** is a perspective view of the customized patient-specific orthopaedic surgical instrument of FIG. **23** secured to a bone of a patient;

FIG. **26** is an elevation view of another embodiment of a customized patient-specific orthopaedic surgical instrument;

FIG. **27** is a perspective view of the customized patient-specific orthopaedic surgical instrument of FIG. **26**;

FIG. **28** is a perspective view of the customized patient-specific orthopaedic surgical instrument of FIG. **26** secured to a bone of a patient;

FIG. **29** is a perspective view of another embodiment of a customized patient-specific orthopaedic surgical instrument;

FIG. **30** is an elevation view of the customized patient-specific orthopaedic surgical instrument of FIG. **29** coupled to a bone of a patient;

FIG. **31** is an exploded perspective view of another embodiment of a customized patient-specific orthopaedic surgical instrument;

FIG. **32** is a perspective view of the customized patient-specific orthopaedic surgical instrument of FIG. **31** in an assembled configuration and coupled to a bone of a patient

FIG. **33** is a side elevation view of another embodiment of a customized patient-specific orthopaedic surgical instrument;

FIG. **34** is a perspective view of another embodiment of a customized patient-specific orthopaedic surgical instrument coupled to a bone of a patient;

FIG. **35** is a perspective view of another embodiment of a customized patient-specific orthopaedic surgical instrument;

FIG. **36** is a side elevation view of the customized patient-specific orthopaedic surgical instrument of FIG. **35** coupled to a bone of a patient;

FIG. **37** is a anterior elevation view of another embodiment of a customized patient-specific orthopaedic surgical instrument coupled to the bony anatomy of a patient;

FIG. **38** is a anterior elevation view of another embodiment of a customized patient-specific orthopaedic surgical instrument coupled to the bony anatomy of a patient;

FIG. **39** is a side elevation view of another embodiment of a customized patient-specific orthopaedic surgical instrument coupled to a bone of a patient;

FIG. **40** is a side elevation view of another embodiment of a customized patient-specific orthopaedic surgical instrument coupled to a bone of a patient;

FIG. **41** is a side elevation view of another embodiment of a customized patient-specific orthopaedic surgical instrument coupled to a bone of a patient;

FIG. **42** is a side elevation view of another embodiment of a customized patient-specific orthopaedic surgical instrument coupled to the knee of a patient in extension;

FIG. **43** is a side elevation view of the customized patient-specific orthopaedic surgical instrument of FIG. **42** with the patient's knee in flexion;

FIG. **44** is a side elevation view of another embodiment of a customized patient-specific orthopaedic surgical instrument coupled to a patient's knee in flexion;

FIG. **45** is a perspective view of another embodiment of a customized patient-specific orthopaedic surgical instrument coupled to a bone of a patient;

FIG. **46** is another perspective view of the customized patient-specific orthopaedic surgical instrument of FIG. **45**;

FIG. **47** is a cross-sectional elevation view of another embodiment of a customized patient-specific orthopaedic surgical instrument;

FIG. **48** is an anterior elevation view of another embodiment of a customized patient-specific orthopaedic surgical instrument coupled to a bone of a patient;

FIG. **49** is an anterior elevation view of another embodiment of a customized patient-specific orthopaedic surgical instrument coupled to a bone of a patient;

FIG. **50** is a side elevation view of the customized patient-specific orthopaedic surgical instrument of FIG. **49**;

FIG. **51** is an anterior elevation view of another embodiment of a customized patient-specific orthopaedic surgical instrument;

FIG. **52** is a side elevation view of another embodiment of a customized patient-specific orthopaedic surgical instrument coupled to a bone of a patient;

FIG. **53** is a perspective view of another embodiment of a customized patient-specific orthopaedic surgical instrument;

FIG. **54** is a perspective view of the customized patient-specific orthopaedic surgical instrument of FIG. **53** coupled to a bone of a patient;

FIG. **55** is an anterior elevation view of another embodiment of a customized patient-specific orthopaedic surgical instrument;

FIG. **56** is a top plan view of the customized patient-specific orthopaedic surgical instrument of FIG. **55**;

FIG. **57** is a side elevation view of the customized patient-specific orthopaedic surgical instrument of FIG. **55**;

FIG. **58** is an anterior elevation view of another embodiment of a customized patient-specific orthopaedic surgical instrument;

FIG. **59** is a top plan view of the customized patient-specific orthopaedic surgical instrument of FIG. **58**;

FIG. **60** is a side elevation view of the customized patient-specific orthopaedic surgical instrument of FIG. **58**;

FIG. **61** is an anterior elevation view of another embodiment of a customized patient-specific orthopaedic surgical instrument;

FIG. **62** is a top plan view of the customized patient-specific orthopaedic surgical instrument of FIG. **61**;

FIG. **63** is a side elevation view of the customized patient-specific orthopaedic surgical instrument of FIG. **61**;

FIG. **64** is an anterior elevation view of another embodiment of a customized patient-specific orthopaedic surgical instrument;

FIG. **65** is a top plan view of the customized patient-specific orthopaedic surgical instrument of FIG. **64**;

FIG. **66** is a side elevation view of the customized patient-specific orthopaedic surgical instrument of FIG. **64**;

FIG. **67** is a perspective view of one embodiment of a customized patient-specific orthopaedic surgical instrument;

FIG. **68** is a side elevation view of the customized patient-specific orthopaedic surgical instrument of FIG. **67** coupled to a bone of a patient;

FIG. **69** is a side elevation view of a pair of universal bone-cutting blocks coupled to the bone of the patient of FIG. **68**;

FIG. **70** is a front elevation view of another embodiment of a customized patient-specific orthopaedic surgical instrument coupled to the bony anatomy of a patient;

FIG. **71** is a front elevation view of a pair of re-cut bone-cutting blocks coupled to the bony anatomy of the patient of FIG. **70**;

FIG. **72** is a side elevation view of another embodiment of a re-cut bone-cutting block;

FIG. **73** is a top perspective view of another embodiment of a re-cut cutting block;

FIG. **74** is an end elevation view of the re-cut bone-cutting block of FIG. **73**;

FIG. **75** is a side elevation view of the re-cut bone-cutting block of FIG. **73** coupled to a bone of a patient;

FIG. **76** is a side elevation view of another embodiment of the re-cut bone-cutting block of FIG. **73** coupled to a bone of a patient;

FIG. **77** is a perspective view of one embodiment of an orthopaedic surgical instrument;

FIG. **78** is a partial side elevation view of the orthopaedic surgical instrument of FIG. **77**;

FIG. **79** is a cross-sectional view of the orthopaedic surgical instrument of FIG. **78**;

FIG. **80** is a partial side elevation view of another embodiment of the orthopaedic surgical instrument of FIG. **78**;

FIG. **81** is a perspective view of one embodiment of a customized patient-specific orthopaedic surgical instrument;

FIG. **82** is an anterior elevation view of the customized patient-specific orthopaedic surgical instrument of FIG. **81** secured to a bone of a patient;

FIG. **83** is an anterior elevation view of another embodiment of a customized patient-specific orthopaedic surgical instrument secured to a bone of a patient;

FIG. **84** is an exploded perspective view of another embodiment of a customized patient-specific orthopaedic surgical instrument secured to a bone of a patient;

FIG. **85** is an anterior elevation view of one embodiment of the customized patient-specific orthopaedic surgical instrument of FIG. **84** secured to a bone of a patient;

FIG. **86** is an anterior elevation view of another embodiment of the customized patient-specific orthopaedic surgical instrument of FIG. **84** secured to a bone of a patient;

FIG. **87** is an anterior elevation view of another embodiment of a customized patient-specific orthopaedic surgical instrument secured to a bone of a patient;

FIG. **88** is a perspective view of another embodiment of a customized patient-specific orthopaedic surgical instrument secured to a bone of a patient;

FIG. **89** is a perspective view of another embodiment of a customized patient-specific orthopaedic surgical instrument secured to a bone of a patient;

FIG. **90** a perspective view of another embodiment of a customized patient-specific orthopaedic surgical instrument;

FIG. **91** is a perspective view of a tool for use with the customized patient-specific orthopaedic surgical instrument of FIG. **90**;

FIG. **92** is a side elevation view of the customized patient-specific orthopaedic surgical instrument of FIG. **90**;

FIG. **93** is a perspective view of another embodiment of a customized patient-specific orthopaedic surgical instrument;

FIG. **94** is a side elevation view of another embodiment of a customized patient-specific orthopaedic surgical instrument secured to a bone of a patient;

FIG. **95** is a side elevation view of the customized patient-specific orthopaedic surgical instrument of FIG. **94** after a bone resection procedure;

FIG. **96** is a perspective view of one embodiment of a customized patient-specific orthopaedic surgical instrument;

FIG. **97** is a perspective view of another embodiment of a customized patient-specific orthopaedic surgical instrument secured to a leg of a patient;

FIG. **98** is a perspective view of another embodiment of a customized patient-specific orthopaedic surgical instrument secured to a leg of a patient;

FIG. **99** is a perspective view of another embodiment of a customized patient-specific orthopaedic surgical instrument secured to a leg of a patient;

FIG. **100** is a perspective view of another embodiment of a customized patient-specific orthopaedic surgical instrument secured to a leg of a patient;

FIG. **101** is a perspective view of another embodiment of a customized patient-specific orthopaedic surgical instrument secured to a leg of a patient;

FIG. **102** is a perspective view of another embodiment of a customized patient-specific orthopaedic surgical instrument secured to a bone of a patient;

FIG. **103** is a top plan view of the customized patient-specific orthopaedic surgical instrument of FIG. **102**;

FIG. **104** is a perspective view of another embodiment of a customized patient-specific orthopaedic surgical instrument;

FIG. **105** is an anterior elevation view of another embodiment of a customized patient-specific orthopaedic surgical instrument secured to a bone of a patient;

FIG. **106** is a side elevation view of the customized patient-specific orthopaedic surgical instrument of FIG. **105**;

FIG. **107** is a perspective view of another embodiment of a customized patient-specific orthopaedic surgical instrument;

FIG. **108** is a side elevation view of the customized patient-specific orthopaedic surgical instrument of FIG. **107** secured to a bone of a patient;

FIG. **109** is a perspective view of another embodiment of a customized patient-specific orthopaedic surgical instrument;

FIG. **110** is a top plan view of the customized patient-specific orthopaedic surgical instrument of FIG. **109** secured to a bone of a patient;

FIG. **111** is an anterior elevation view of another embodiment of a customized patient-specific orthopaedic surgical instrument secured to a bone of a patient;

FIG. **112** is a top elevation proximal-to-distal view of the customized patient-specific orthopaedic surgical instrument of FIG. **111**;

FIG. **113** is a top elevation view of another embodiment of the customized patient-specific orthopaedic surgical instrument of FIG. **111**;

FIG. **114** is a top elevation view of another embodiment of the customized patient-specific orthopaedic surgical instrument of FIG. **111**;

FIG. **115** is a top elevation view of another embodiment of the customized patient-specific orthopaedic surgical instrument of FIG. **111**;

FIG. **116** is an anterior elevation view of one embodiment of a leg brace for securing a patient's leg;

FIG. **117** is an anterior elevation view of a bone of a patient having a number of markers coupled thereto;

FIG. **118** is an anterior elevation view of another bone of a patient having a marking thereon;

FIG. **119** is an exploded perspective view of a customized patient-specific orthopaedic surgical instrument for use with a bone of a patient;

FIG. **120** is an exploded perspective view of another customized patient-specific orthopaedic surgical instrument for use with a bone of a patient;

FIG. **121** is a bottom perspective view of another embodiment of a customized patient-specific orthopaedic surgical instrument;

FIG. **122** is a side elevation view of the customized patient-specific orthopaedic surgical instrument of FIG. **121** coupled to a bone of a patient;

FIG. **123** is a perspective view of a programming device for use with the customized patient-specific orthopaedic surgical instrument of FIG. **121**; and

FIG. **124** is a simplified block diagram of a milling machine for fabrication of customized patient-specific orthopaedic surgical instruments.

DETAILED DESCRIPTION OF THE DRAWINGS

While the concepts of the present disclosure are susceptible to various modifications and alternative forms, specific exemplary embodiments thereof have been shown by way of example in the drawings and will herein be described in detail. It should be understood, however, that there is no intent to limit the concepts of the present disclosure to the particular forms disclosed, but on the contrary, the intention is to cover all modifications, equivalents, and alternatives falling within the spirit and scope of the invention as defined by the appended claims.

Referring to FIG. **1**, an algorithm **10** for fabricating a customized patient-specific orthopaedic surgical instrument is illustrated. What is meant herein by the term "customized

patient-specific orthopaedic surgical instrument" is a surgical tool for use by a surgeon in performing an orthopaedic surgical procedure that is intended, and configured, for use on a particular patient. As such, it should be appreciated that, as used herein, the term "customized patient-specific orthopaedic surgical instrument" is distinct from standard, non-patient specific orthopaedic surgical instruments that are intended for use on a variety of different patients. Additionally, it should be appreciated that, as used herein, the term "customized patient-specific orthopaedic surgical instrument" is distinct from orthopaedic prostheses, whether patient-specific or generic, which are surgically implanted in the body of the patient. Rather, customized patient-specific orthopaedic surgical instruments are used by an orthopaedic surgeon to assist in the implantation of orthopaedic prostheses.

In some embodiments, the customized patient-specific orthopaedic surgical instrument may be customized to the particular patient based on the location at which the instrument is to be coupled to one or more bones of the patient, such as the femur and/or tibia. For example, in some embodiments, the customized patient-specific orthopaedic surgical instrument may include a bone-contacting or facing surface having a negative contour that matches or substantially matches the contour of a portion of the relevant bone of the patient. As such, the customized patient-specific orthopaedic surgical instrument is configured to be coupled to the bone of a patient in a unique location and position with respect to the patient's bone. That is, the negative contour of the bone-contacting surface is configured to receive the matching contour surface of the portion of the patient's bone. As such, the orthopaedic surgeon's guesswork and/or intra-operative decision-making with respect to the placement of the orthopaedic surgical instrument are reduced. For example, the orthopaedic surgeon may not be required to locate landmarks of the patient's bone to facilitate the placement of the orthopaedic surgical instrument, which typically requires some amount of estimation on part of the surgeon. Rather, the orthopaedic surgeon may simply couple the customized patient-specific orthopaedic surgical instrument on the bone or bones of the patient in the unique location. When so coupled, the cutting plane, drilling holes, milling holes, and/or other guides are defined in the proper location relative to the bone and intended orthopaedic prosthesis. The customized patient-specific orthopaedic surgical instrument may be embodied as any type of orthopaedic surgical instrument such as, for example, a bone-cutting block, a drilling guide, a milling guide, or other type of orthopaedic surgical instrument configured to be coupled to a bone of a patient.

As shown in FIG. **1**, the algorithm **10** includes process steps **12** and **14**, in which an orthopaedic surgeon performs pre-operative planning of the orthopaedic surgical procedure to be performed on a patient. The process steps **12** and **14** may be performed in any order or contemporaneously with each other. In process step **12**, a number of medical images of the relevant bony anatomy or joint of the patient are generated. To do so, the orthopaedic surgeon or other healthcare provider may operate an imaging system to generate the medical images. The medical images may be embodied as any number and type of medical images capable of being used to generate a three-dimensional rendered model of the patient's bony anatomy or relevant joint. For example, the medical images may be embodied as any number of computed tomography (CT) images, magnetic resonance imaging (MRI) images, or other three-dimensional medical images. Additionally or alternatively, as discussed in more detail below in regard to process step **18**, the medical images may be embodied as a number of X-ray images or other two-dimensional images from which a three-dimensional rendered model of the patient's relevant bony anatomy may be generated. Additionally, in some embodiments, the medical image may be enhanced with a contrast agent designed to highlight the cartilage surface of the patient's knee joint.

In process step **14**, the orthopaedic surgeon may determine any additional pre-operative constraint data. The constraint data may be based on the orthopaedic surgeon's preferences, preferences of the patient, anatomical aspects of the patient, guidelines established by the healthcare facility, or the like. For example, the constraint data may include the orthopaedic surgeon's preference for a metal-on-metal interface, amount of inclination for implantation, the thickness of the bone to resect, size range of the orthopaedic implant, and/or the like. In some embodiments, the orthopaedic surgeon's preferences are saved as a surgeon's profile, which may used as a default constraint values for further surgical plans.

In process step **16**, the medical images and the constraint data, if any, are transmitted or otherwise provided to an orthopaedic surgical instrument vendor or manufacturer. The medical images and the constraint data may be transmitted to the vendor via electronic means such as a network or the like. After the vendor has received the medical images and the constraint data, the vendor processes the images in step **18**. The orthopaedic surgical instrument vendor or manufacturer processes the medical images to facilitate the determination of the bone cutting planes, implant sizing, and fabrication of the customized patient-specific orthopaedic surgical instrument as discussed in more detail below. For example, in process step **20** the vendor may convert or otherwise generate three-dimensional images from the medical images. For example, in embodiments wherein the medical images are embodied as a number of two-dimensional images, the vendor may use a suitable computer algorithm to generate one or more three-dimensional images from the number of two-dimensional images. Additionally, in some embodiments, the medical images may be generated based on an established standard such as the Digital Imaging and Communications in Medicine (DICOM) standard. In such embodiments, an edge-detection, thresholding, watershead, or shape-matching algorithm may be used to convert or reconstruct images to a format acceptable in a computer aided design application or other image processing application. Further, in some embodiments, an algorithm may be used to account for tissue such as cartilage not discernable in the generated medical images. In such embodiments, any three-dimensional model of the patient-specific instrument (see, e.g., process step **26** below) may be modified according to such algorithm to increase the fit and function of the instrument.

In process step **22**, the vendor may process the medical images, and/or the converted/reconstructed images from process step **20**, to determine a number of aspects related to the bony anatomy of the patient such as the anatomical axis of the patient's bones, the mechanical axis of the patient's bone, other axes and various landmarks, and/or other aspects of the patient's bony anatomy. To do so, the vendor may use any suitable algorithm to process the images.

In process step **24**, the cutting planes of the patient's bone are determined. The planned cutting planes are determined based on the type, size, and position of the orthopaedic prosthesis to be used during the orthopaedic surgical procedure, on the process images such as specific landmarks

identified in the images, and on the constraint data supplied by the orthopaedic surgeon in process steps **14** and **16**. The type and/or size of the orthopaedic prosthesis may be determined based on the patient's anatomy and the constraint data. For example, the constraint data may dictate the type, make, model, size, or other characteristic of the orthopaedic prosthesis. The selection of the orthopaedic prosthesis may also be modified based on the medical images such that an orthopaedic prosthesis that is usable with the bony anatomy of the patient and that matches the constraint data or preferences of the orthopaedic surgeon is selected.

In addition to the type and size of the orthopaedic prosthesis, the planned location and position of the orthopaedic prosthesis relative to the patient's bony anatomy is determined. To do so, a digital template of the selected orthopaedic prosthesis may be overlaid onto one or more of the processed medical images. The vendor may use any suitable algorithm to determine a recommended location and orientation of the orthopaedic prosthesis (i.e., the digital template) with respect to the patient's bone based on the processed medical images (e.g., landmarks of the patient's bone defined in the images) and/or the constraint data. Additionally, any one or more other aspects of the patient's bony anatomy may be used to determine the proper positioning of the digital template.

In some embodiments, the digital template along with surgical alignment parameters may be presented to the orthopaedic surgeon for approval. The approval document may include the implant's rotation with respect to bony landmarks such as the femoral epicondyle, posterior condyles, sulcus groove (Whiteside's line), and the mechanical axis as defined by the hip, knee, and/or ankle centers.

The planned cutting planes for the patient's bone(s) may then be determined based on the determined size, location, and orientation of the orthopaedic prosthesis. In addition, other aspects of the patient's bony anatomy, as determined in process step **22**, may be used to determine or adjust the planned cutting planes. For example, the determined mechanical axis, landmarks, and/or other determined aspects of the relevant bones of the patient may be used to determine the planned cutting planes.

In process step **26**, a model of the customized patient-specific orthopaedic surgical instrument is generated. In some embodiments, the model is embodied as a three-dimensional rendering of the customized patient-specific orthopaedic surgical instrument. In other embodiments, the model may be embodied as a mock-up or fast prototype of the customized patient-specific orthopaedic surgical instrument. The particular type of orthopaedic surgical instrument to be modeled and fabricated may be determined based on the orthopaedic surgical procedure to be performed, the constraint data, and/or the type of orthopaedic prosthesis to be implanted in the patient. As such, the customized patient-specific orthopaedic surgical instrument may be embodied as any type of orthopaedic surgical instrument for use in the performance of an orthopaedic surgical procedure. For example, the orthopaedic surgical instrument may be embodied as a bone-cutting block, a drilling guide, a milling guide, and/or any other type of orthopaedic surgical tool or instrument.

The particular shape of the customized patient-specific orthopaedic surgical instrument is determined based on the planned location of the orthopaedic surgical instrument relative to the patient's bony anatomy. The location of the customized patient-specific orthopaedic surgical instrument with respect to the patient's bony anatomy is determined based on the type and determined location of the orthopaedic prosthesis to be used during the orthopaedic surgical procedure. That is, the planned location of the customized patient-specific orthopaedic surgical instrument relative to the patient's bony anatomy may be selected based on, in part, the planned cutting planes of the patient's bone(s) as determined in step **24**. For example, in embodiments wherein the customized patient-specific orthopaedic surgical instrument is embodied as a bone-cutting block, the location of the orthopaedic surgical instrument is selected such that the cutting guide of the bone-cutting block matches one or more of the planned cutting planes determined in process step **24**. Additionally, the planned location of the orthopaedic surgical instrument may be based on the identified landmarks of the patient's bone identified in process step **22**.

In some embodiments, the particular shape or configuration of the customized patient-specific orthopaedic surgical instrument may be determined based on the planned location of the instrument relative to the patient's bony anatomy. That is, the customized patient-specific orthopaedic surgical instrument may include a bone-contacting surface having a negative contour that matches the contour of a portion of the bony anatomy of the patient such that the orthopaedic surgical instrument may be coupled to the bony anatomy of the patient in a unique location, which corresponds to the pre-planned location for the instrument. When the orthopaedic surgical instrument is coupled to the patient's bony anatomy in the unique location, one or more guides (e.g., cutting or drilling guide) of the orthopaedic surgical instrument may be aligned to one or more of the bone cutting plane(s) as discussed above.

One illustrative embodiment of a method **40** for generating a model, such as a computer model, of a patient-specific orthopaedic instrument is illustrated in FIGS. **2** through **9**. The method **40** begins with a step **42** in which a cartilage thickness value is determined. The cartilage thickness value is indicative of the average thickness of the cartilage of the patient's bone. As such, in one embodiment, the cartilage thickness value is equal to the average thickness of cartilage for an individual having similar characteristics as the patient. For example, the cartilage thickness value may be equal to the average thickness value of individuals of the same gender as the patient, the same age as the patient, having the same activity level of the patient, and/or the like. In other embodiments, the cartilage thickness value is determined based on one or more medical images of the patient's bone, such as those images transmitted in process step **16**.

In step **44**, a reference contour of the patient's relevant bone is determined. The reference contour is based on the surface contour of a three-dimensional model of the patient's relevant bone, such as the three-dimensional model generated in step **20**. Initially the reference contour is identical to a region (i.e. the region of interest such as the distal end of the patient's femur or the proximal end of the patient's tibia) of the patient's bone. That is, in some embodiments, the reference contour is juxtaposed on the surface contour of the region of the patient's bone.

Subsequently, in step **46**, the reference contour is scaled to compensate for the cartilage thickness value determined in step **42**. To do so, in one embodiment, the scale of the reference contour is increased based on the cartilage thickness value. For example, the scale of the reference contour may be increased by an amount equal to or determined from the cartilage thickness value. However, in other embodiments, the reference contour may be scaled using other techniques designed to scale the reference contour to a size

at which the reference contour is compensated for the thickness of the cartilage on the patient's bone.

For example, in one particular embodiment, the reference contour is scaled by increasing the distance between a fixed reference point and a point lying on, and defining in part, the reference contour. To do so, in one embodiment, a method **60** for scaling a reference contour as illustrated in FIG. **3** may be used. The method **60** begins with step **62** in which a medial/lateral line segment is established on the three-dimensional model of the patient's relevant bone. The medial/lateral line segment is defined or otherwise selected so as to extend from a point lying on the medial surface of the patient's bone to a point lying on lateral surface of the patient's bone. The medial surface point and the lateral surface point may be selected so as to define the substantially maximum local medial/lateral width of the patient's bone in some embodiments.

In step **64**, an anterior/posterior line segment is established on the three-dimensional model of the patient's relevant bone. The anterior/posterior line segment is defined or otherwise selected so as to extend from a point lying on the anterior surface of the patient's bone to a point lying on posterior surface of the patient's bone. The anterior surface point and the posterior surface point may be selected so as to define the substantially maximum local anterior/posterior width of the patient's bone in some embodiments.

The reference point from which the reference contour will be scaled is defined in step **66** as the intersection point of the medial/lateral line segment and anterior/posterior line segment. As such, it should be appreciated that the medial surface point, the lateral surface point, the anterior surface point, and the posterior surface point lie on the same plane. After the reference point is initially established in step **66**, the reference point is moved or otherwise translated toward an end of the patient's bone in step **68**. For example, in embodiments wherein the patient's bone is embodied as a femur, the reference point is moved inferiorly toward the distal end of the patient's femur. Conversely, in embodiments when the patient's bone is embodied as a tibia, the reference point is moved superiorly toward the proximal end of the patient's tibia. In one embodiment, the reference point is moved a distance equal to about half the length of the anterior/posterior line segment as determined in step **64**. However, in other embodiments, the reference point may be moved other distances sufficient to compensate the reference contour for thickness of the cartilage present on the patient's bone.

Once the location of the reference point has been determined in step **68**, the distance between the reference point and each point lying on, and defining in part, the reference contour is increased in step **70**. To do so, in one particular embodiment, each point of the reference contour is moved a distance away from the reference point based on a percentage value of the original distance defined between the reference point and the particular point on the reference contour. For example, in one embodiment, each point lying on, and defining in part, the reference contour is moved away from the reference point by a distance equal to a percentage value of the original distance between the reference point and the particular point. In one embodiment, the percentage value is in the range of about 5 percent to about thirty percent. In one particular embodiment, the percentage value is about ten percent.

Referring now to FIGS. **4-9**, in another embodiment, the reference contour is scaled by manually selecting a local "high" point on the surface contour of the three-dimensional image of the patient's bone. For example, in embodiments wherein the relevant patient's bone is embodied as a tibia as illustrated in FIGS. **4-6**, the reference point **90** is initially located on the tibial plateau high point of the tibial model **92**. Either side of the tibial plateau may be used. Once the reference point **90** is initially established on the tibial plateau high point, the reference point **90** is translated to the approximate center of the plateau as illustrated in FIG. **5** such that the Z-axis defining the reference point is parallel to the mechanical axis of the tibial model **92**. Subsequently, as illustrated in FIG. **6**, the reference point is moved in the distal direction by a predetermined amount. In one particular embodiment, the reference point is moved is the distal direction by about 20 millimeters, but other distances may be used in other embodiments. For example, the distance over which the reference point is moved may be based on the cartilage thickness value in some embodiments.

Conversely, in embodiments wherein the relevant patient's bone is embodied as a femur as illustrated in FIGS. **7-9**, the reference point **90** is initially located on the most distal point of the distal end of the femoral model **94**. Either condyle of the femoral model **94** may be used in various embodiments. Once the reference point **90** is initially established on the most distal point, the reference point **90** is translated to the approximate center of the distal end of the femoral model **94** as illustrated in FIG. **8** such that the Z-axis defining the reference point **90** is parallel to the mechanical axis of the femoral model **92**. The anterior-posterior width **96** of the distal end of the femoral model **94** is also determined. Subsequently, as illustrated in FIG. **9**, the reference point is moved or otherwise translated in the proximal or superior direction by a distance **98**. In one particular embodiment, the reference point is moved in the distal or superior direction by a distance **98** equal to about half the distance **96**. As such, it should be appreciated that one of a number of different techniques may be used to define the location of the reference point based on, for example, the type of bone.

Referring now back to FIG. **2**, once the reference contour has been scaled in step **46**, the medial/lateral sides of the reference contour are adjusted in step **48**. To do so, in one embodiment, the distance between the reference point and each point lying on, and defining in part, the medial side and lateral side of the reference contour is decreased. For example, in some embodiments, the distance between the reference point and the points on the medial and lateral sides of the scaled reference contour are decreased to the original distance between such points. As such, it should be appreciated that the reference contour is offset or otherwise enlarged with respect to the anterior side of the patient's bone and substantially matches or is otherwise not scaled with respect to the medial and lateral sides of the patient's bone.

The reference contour may also be adjusted in step **48** for areas of the patient's bone having a reduced thickness of cartilage. Such areas of reduced cartilage thickness may be determined based on the existence of bone-on-bone contact as identified in a medical image, simulation, or the like. Additionally, information indicative of such areas may be provided by the orthopaedic surgeon based on his/her expertise. If one or more areas of reduced cartilage thickness are identified, the reference contour corresponding to such areas of the patient's bone is reduced (i.e., scaled back or down).

Additionally, in some embodiments, one or more osteophytes on the patient's bone may be identified; and the reference contour may be compensated for such presence of the osteophytes. By compensating for such osteophytes, the reference contour more closely matches the surface contour

of the patient's bone. Further, in some embodiments, a distal end (in embodiments wherein the patient's bone is embodied as a tibia) or a proximal end (in embodiments wherein the patient's bone is embodied as a femur) of the reference contour may be adjusted to increase the conformity of the reference contour to the surface contour of the bone. For example, in embodiments wherein the patient's bone is a femur, the superior end of the scaled reference contour may be reduced or otherwise moved closer to the surface contour of the patient's femur in the region located superiorly to a cartilage demarcation line defined on the patient's femur. Conversely, in embodiments wherein the patient's bone is embodied as a tibia, an inferior end of the scaled reference contour may be reduced or otherwise moved closer to the surface contour of the patient's tibia in the region located inferiorly to a cartilage demarcation line of the patient's tibia. As such, it should be appreciated that the scaled reference contour is initially enlarged to compensate for the thickness of the patient's cartilage on the patient's bone. Portions of the scaled reference contour are then reduced or otherwise moved back to original positions and/or toward the reference point in those areas where cartilage is lacking, reduced, or otherwise not present.

Once the reference contour has been scaled and adjusted in steps **46** and **48**, the position of the cutting guide is defined in step **50**. In particular, the position of the cutting guide is defined based on an angle defined between a mechanical axis of the patient's femur and a mechanical axis of the patient's tibia. The angle may be determined by establishing a line segment or ray originating from the proximal end of the patient's femur to the distal end of the patient's femur and defining a second line segment or ray extending from the patient's ankle through the proximal end of the patient's tibia. The angle defined by these two line segments/rays is equal to the angle defined between the mechanical axis of the patient's femur and tibia. The position of the bone cutting guide is then determined based on the angle between the mechanical axes of the patient's femur and tibia. It should be appreciated that the position of the cutting guide defines the position and orientation of the cutting plane of the customized patient-specific cutting block. Subsequently, in step **52**, a negative contour of the customized patient-specific cutting block is defined based on the scaled and adjusted reference contour and the angle defined between the mechanical axis of the femur and tibia.

Referring back to FIG. **1**, after the model of the customized patient-specific orthopaedic surgical instrument has been generated in process step **26**, the model is validated in process step **28**. The model may be validated by, for example, analyzing the rendered model while coupled to the three-dimensional model of the patient's anatomy to verify the correlation of cutting guides and planes, drilling guides and planned drill points, and/or the like. Additionally, the model may be validated by transmitting or otherwise providing the model generated in step **26** to the orthopaedic surgeon for review. For example, in embodiments wherein the model is a three-dimensional rendered model, the model along with the three-dimensional images of the patient's relevant bone(s) may be transmitted to the surgeon for review. In embodiments wherein the model is a physical prototype, the model may be shipped to the orthopaedic surgeon for validation.

After the model has been validated in process step **28**, the customized patient-specific orthopaedic surgical instrument is fabricated in process step **30**. The customized patient-specific orthopaedic surgical instrument may be fabricated using any suitable fabrication device and method. Additionally, the customized patient-specific orthopaedic instrument may be formed from any suitable material such as a metallic material, a plastic material, or combination thereof depending on, for example, the intended use of the instrument. The fabricated customized patient-specific orthopaedic instrument is subsequently shipped or otherwise provided to the orthopaedic surgeon. The surgeon performs the orthopaedic surgical procedure in process step **32** using the customized patient-specific orthopaedic surgical instrument. As discussed above, because the orthopaedic surgeon does not need to determine the proper location of the orthopaedic surgical instrument intra-operatively, which typically requires some amount of estimation on part of the surgeon, the guesswork and/or intra-operative decision-making on part of the orthopaedic surgeon is reduced.

Referring now to FIGS. **10-12**, in one embodiment, the customized patient-specific orthopaedic surgical instrument may be embodied as a femoral cutting block **100**. The cutting block **100** is configured to be coupled to a femur **124** of a patient as illustrated in FIG. **12**. The cutting block **100** includes a body **102** configured to be coupled to the anterior side of the femur **124**. Two tabs **104**, **106** extend orthogonally from the body **102** and are configured to wrap around the end of the femur **124** as discussed in more detail below. Each of the tabs **104**, **106** includes an inwardly curving lip **108**, **110**, respectively, that reference the posterior condyles of the femur. The femoral cutting block **100** includes a bone-contacting or bone-facing surface **112** defined on the inside of the body **102**, the tabs **104**, **106**, and the lips **108**, **110**. The bone-contacting surface **112** includes a negative contour **114** configured to receive a portion of the patient's bone having a corresponding contour. As discussed above, the negative contour **114** of the bone-contacting surface **112** allows the positioning of the cutting block **100** on the patient's bone in a unique pre-determined location and orientation.

In some embodiments, the bone-contacting surface **112** of the cutting block **100** (as well as each bone-contacting surface discussed in regard to other embodiments) may or may not be an exact negative of the three-dimensional bone model generated from the medical image (see step **26** of algorithm **10** illustrated and described above in regard to FIG. **1**). Instead, the bone-contacting surface may be a fixed offset of the bone model to compensate for the patient's cartilage that may or may not appear in the medical image. This offset typically varies from about 0.5 millimeters to about 5 millimeters depending on location, patient gender, and disease state of the patient's joint. The cartilages is usually thickest in regions **112***b*, **112***d*, and **112***e*. It is often thin, or non-existent in regions **112***a* and **112***c*. Thus the femoral cutting block **100** incorporates varying offsets on its bone contacting surface **112**.

The cutting block **100** includes a cutting guide platform **116** raised above the body **102**. The cutting guide platform **116** includes a cutting guide **118** defined therein. The platform **116** also includes a pair of anterior pin guides **120**. A pair of distal pin guides **121** is defined on the tabs **104**, **106**. In some embodiments, the pin guides **120**, **121** may be used as drill guides to establish guide pinholes in the femur **124** of the patient. However, in other embodiments, guide pins may not be used. That is, the cutting block **100** may be coupled to the femur **124** of the patient via pressure applied by the body **102** and the tabs **104**, **106** as discussed below.

In use, the femoral cutting block **100** is coupled to the end **122** of a patient's femur **124** as illustrated in FIG. **12**. Again, because the bone-contacting surface **112** of the cutting block **100** includes negative contour **114**, the block **100** may be

coupled to the femur **124** in a pre-planned, unique position. When so coupled, the tabs **104**, **106** wrap around the distal end **126** of the femur **124** and the lips **108**, **110** of the tabs **104**, **106** wrap around the posterior side of the femur **124**. Additionally, when the block **100** is coupled to the patient's femur **124**, a portion of the anterior side of the femur **124** is received in the negative contour **112** of the body **102**, a portion of the distal end **126** is received in the negative contour **112** of the tabs **104**, **106**, and a portion of the posterior side of the femur **124** is received in the negative contour (if any) of the lips **108**, **110**. As such, the anterior, distal, and posterior surfaces of the femur **124** are referenced by the femur cutting block **100**. The body **102**, the tabs **104**, **106**, and the lips **108**, **110** of the femoral cutting block **100** cooperate to secure the instrument **100** to the femur **124**. That is, the body **102**, the tabs **104**, **106**, and the lips **108**, **110** apply an amount of pressure to the femur **124** to hold the block **100** in place. However, in other embodiments, a number of guide pins (not shown) may be inserted into the pin guides **120**, **121** and into the femur **124** to secure the femoral cutting block **100** to the femur **124**. Furthermore, pin guides **120**, **121** may be used to create holes in the femur **124** that are useful references in future procedural steps, such as orienting a re-cut block (not shown) or a chamfer block (not shown).

After the block **100** has been secured to the patient's femur **124**, the orthopaedic surgeon may use the femoral cutting block to resect a pre-planned amount of the femur **124**. That is, the bone cut made using the cutting guide **118** corresponds to the cutting plane determined during the fabrication of the cutting block **100** (see process step **24** of algorithm **10** described above in regard to FIG. **1**). It should be appreciated that because the cutting guide platform **116** is raised above the body **102**, the depth of the cutting guide **118** is increased, which provides stability to the blade of the orthopaedic bone saw or other cutting device during use.

Referring now to FIGS. **13-15**, in another embodiment, the customized patient-specific orthopaedic surgical instrument may be embodied as a femoral cutting block **150**. The cutting block **150** is configured to be coupled to a femur **154** of a patient as illustrated in FIG. **15**. The cutting block **150** includes a body **156** having an anterior wall **158** and a distal wall **160**. During use, the anterior wall **158** is configured to contact an anterior side of the femur **154** and the distal wall **160** is configured to contact a distal end of the femur **154** as discussed in more detail below. Each of the walls **158**, **160** of the cutting block **150** includes a bone-contacting or bone-facing surface **162**, **164**, and an outer surface **166**, **168**, respectively. A negative contour **170** is defined in the bone-contacting surfaces **162**, **164**. The negative contour **170** is configured to receive a portion of the patient's femur **154** having a corresponding contour. As discussed above, the negative contour **170** of the bone-contacting surface surfaces **162**, **164** allows the positioning of the cutting block **150** on the patient's femur **154** in a unique pre-determined location and orientation.

The cutting block **150** includes a cutting guide **172** defined in the anterior wall **158**. Illustratively, the cutting guide **172** is a captured cutting guide. The femoral cutting block **150** also includes an indent or recess **167** that indicates to the surgeon a recommended location on the block **150** to hold while positioning the block. The femoral cutting block **150** also includes a number of pin guides **174**. The pin guides **174** are used as drill guides to establish guide pin holes in the femur **154** of the patient. A number of guide pins (not shown) may then be inserted into the pin guides **174** and the femur **154** to secure the cutting block **150** to the femur **154**.

In use, the femoral cutting block **150** is coupled to the distal end **176** of the patient's femur **154** as illustrated in FIG. **15**. Again, because the bone-contacting surfaces **162**, **164** of the cutting block **150** includes the negative contour **170**, the block **150** may be coupled to the femur **154** in a pre-planned, unique position. When so coupled, a portion of the anterior side of the femur **154** is received in the negative contour **170** of the anterior wall **158** of the block **150** and a portion of the distal end of the femur **154** is received in the negative contour **170** of the distal wall **160** of the block **150**. After the femoral cutting block **150** has been coupled to the patient's femur **154**, the orthopaedic surgeon may resect the femur **154** using the cutting block **150**. It should be appreciated that the shape of the distal wall **160** allows the surgeon to evaluate the rotation and position of the final orthopaedic implant. That is, because the distal wall **160** does not completely cover the condyles of the patient's femur, the orthopaedic surgeon can visibly observe the position of the femur **154** and the cutting block **150**. Additionally, the bone-contacting or bone-facing surface **162** of the distal wall **160** forms an extended guide for the saw blade of the orthopaedic bone saw or other cutting device, which may reduce the likelihood of scything.

Referring now to FIGS. **16-18**, in another embodiment, the customized patient-specific orthopaedic surgical instrument may be embodied as a femoral cutting block **200**. The cutting block **200** is configured to be coupled to a femur **204** of a patient as illustrated in FIG. **18**. The cutting block **200** includes a body **202** having an anterior wall **206** and a pair of distal tabs **208**, **210** extending out from the anterior wall **206**. During use, the anterior wall **206** is configured to contact an anterior side of the femur **204** and the distal tabs **208**, **210** are configured to extend over the distal end of the femur **204** as discussed in more detail below. The anterior wall **206** includes a bone-contacting or bone-facing surface **212** and an outer surface **214**. Each of the distal tabs **208**, **210** include a substantially planar bone-facing surface **216**, **218** and an outer surface **220**, **222**, respectively. A negative contour **224** is defined in the bone-contacting surfaces **212** of the anterior wall of the body **202**. The negative contour **224** is configured to receive a portion of the patient's femur **204** having a corresponding contour. As discussed above, the negative contour **224** of the bone-contacting surface **212** allows the positioning of the cutting block **200** on the patient's femur **204** in a unique pre-determined location and orientation.

The cutting block **200** includes a cutting guide **226** defined in the anterior wall **206**. The thickness of the anterior wall **206** around the cutting guide **226** is increased relative to other portions of the wall **206** to increase the depth of the cutting guide **226**. Illustratively, the cutting guide **226** is a captured cutting guide. The femoral cutting block **200** also includes a number of pin guides **228** defined in the anterior wall **206** and each distal tab **208**, **210**. The pin guides **228** are used as drill guides to establish guide pin holes in the femur **204** of the patient. Illustratively, the pin guides **228** are divergent to prevent the cutting block **200** from loosening under the vibrations of an orthopaedic bone saw. A number of guide pins (not shown) may then be inserted into the pin guides **228** and the femur **204** to secure the cutting block **200** to the femur **204**. In one particular embodiment, the pin guides **228** located on the distal tabs **208**, **210** are used only as drill guides to establish pin holes in the femur **204** for subsequent orthopaedic instruments.

In use, the femoral cutting block **200** is coupled to the distal end **230** of the patient's femur **204** as illustrated in FIG. **18**. Again, because the bone-contacting surface **212** of the cutting block **200** includes the negative contour **224**, the block **200** may be coupled to the femur **204** in a pre-planned, unique position. When so coupled, a portion of the anterior side of the femur **204** is received in the negative contour **224** of the anterior wall **206** of the block **200** and the distal tabs **208**, **210** extend over the end of the femur **204**. In one particular embodiment, the distal tabs **208**, **210** extend over the end of the femur **204**, but do not contact the surface of the femur. As such, only the anterior side of the femur **204** is referenced. Additionally, in the illustrative embodiment, the tabs **208**, **210** extend form the anterior wall **206** at an angle such that the femoral cutting block **200** is offset to one side (e.g., the medial side) of the patient's femur **204** when coupled thereto. After the femoral cutting block **200** has been coupled to the patient's femur **204**, the orthopaedic surgeon may resect the femur **204** using the cutting block **200**. It should be appreciated that the increased thickness of the anterior wall **206** and resulting increased depth of the cutting guide **226** may improve the stability of the saw blade of the orthopaedic bone saw or other cutting device.

Referring now to FIGS. **19-21**, in another embodiment, a customized patient-specific orthopaedic surgical instrument **250** includes a patient-universal femoral cutting block **252** and a patient-specific, disposable insert **254** removably coupled to the femoral cutting block **252**. The femoral cutting block **252** includes an anterior wall **256** and a distal tab **258**. The cutting block **250** is configured to be coupled to a femur **255** of a patient as illustrated in FIG. **21**. During use, the anterior wall **256** is configured to confront the anterior side of the femur **255** and the distal tab **258** is configured to confront the distal end of the femur **255** as discussed in more detail below.

The patient-specific insert **254** includes an anterior platform **260**, a posterior clip or arcuate bracket **262**, and a pair of distal feet **264**, **266**. The platform **260**, clip **262**, and feet **264**, **266** are configured to be removably coupled to the femoral cutting block **252**. In particular, the platform **260** is removably coupled to a bone-facing surface **268** of the anterior wall **256**. The platform **260** includes a bone-contacting surface **270** having a negative contour **272** defined therein. The negative contour **272** of the platform **260** is configured to receive a portion of an anterior side of the patient's femur **255**. The clip **262** is coupled to the platform **260** and extends therefrom in an inwardly curving arc. The clip **262** also includes a bone-contacting surface **274** having a negative contour **276** defined therein. The negative contour **276** of the clip **262** is configured to receive a portion of a posterior condyle of the patient's femur **255**. The feet **264**, **266** are removably coupled to a bone-facing surface **278** of the distal tab **262** of the block **252**. Each of the feet **264**, **266** includes a bone-contacting surface **280**, **282**, respectively. Each of the bone-contacting surface **280**, **282** includes a negative contour **284**, **286**, respectively, defined therein. The feet **264**, **266** are positioned on the distal tab **258** such that the feet **264**, **266** contact the distal end of the femur **255**. That is, the negative contours **284**, **286** are configured to receive portions of the distal end of the femur. As discussed above, the negative contours **272**, **276**, **284**, **286** of the bone-contacting surface surfaces **270**, **274**, **280**, **282** allows the positioning of the instrument **250** on the patient's femur **255** in a unique pre-determined location and orientation.

The cutting block **252** includes a cutting guide **288** defined in the anterior wall **256**. Illustratively, the cutting guide **288** is a captured cutting guide. The femoral cutting block **252** also includes a number of pin guides **290**. The pin guides **290** are used as drill guides to establish guide pin holes in the femur **255** of the patient. A number of guide pins (not shown) may then be inserted into the pin guides **290** and the femur **255** to secure the customized patient-specific surgical instrument **250** to the patient's femur **255**. The cutting guide **288** and the pin guides **290** also extend through the patient-specific insert **254**.

In use, the patient-specific insert **254** is initially coupled to the femoral cutting block **252**. The customized patient-specific surgical instrument **250** may then be coupled to the distal end **292** of the patient's femur **255** as illustrated in FIG. **21**. Again, because the bone-contacting surface surfaces **270**, **274**, **280**, **282** of the patient-specific insert **254** includes the respective negative contours **272**, **276**, **284**, **286**, the instrument **250** may be coupled to the femur **255** in a pre-planned, unique position. When so coupled, a portion of the anterior side of the femur **255** is received in the negative contour **272** of the platform **260** of the insert **254**. The clip **262** wraps around the medial side of the distal end **292** of the patient's femur **255**. A portion of the posterior medial condyle of the patient's femur is received in the negative contour **276** of the clip **262**. Additionally, each of the feet **264**, **266** contact the distal end of the condyles of the patient's femur. A portion of the distal condyles is received in the negative contours **284**, **286** of the feet **264**, **266**, respectively. After the instrument **250** has been coupled to the patient's femur **255**, the orthopaedic surgeon may resect the femur **255** using the instrument **250**. After the orthopaedic surgical procedure is completed, the patient-specific insert **254** may be discarded. The femoral cutting block **252** may be sterilized and reused in subsequent surgical procedures with a new patient-specific insert.

In other embodiments, the clip **262** may be oriented to reference the proximal surface of the posterior condyle of the femur **255** as illustrated in FIG. **22**. That is, the clip **262** may be angled proximally relative to the femoral cutting block **252**. As discussed above, the clip **262** also includes the bone-contacting surface **274**, which includes the negative contour **276** configured to receive a corresponding contour of the proximal posterior condyle of the femur **255**. It should be appreciated that the position of the clip **262** provides space for or otherwise avoids interfering with particular soft tissue such particular ligaments of the patient's joint.

Referring now to FIGS. **23-25**, in another embodiment, the customized patient-specific orthopaedic surgical instrument may be embodied as a tibial cutting block **300**. The cutting block **300** is configured to be coupled to a tibia **304** of a patient as illustrated in FIG. **25**. The cutting block **300** includes a body **302** having an anterior wall **306** and a pair of tabs **308**, **310** extending out from the anterior wall **306**. During use, the anterior wall **306** is configured to contact an anterior side of the tibia **304** and the tabs **308**, **310** are configured to extend over the medial and lateral condyles of the tibia **304** as discussed in more detail below. The anterior wall **306** includes a bone-contacting or bone-facing surface **312** and an outer surface **314**. A negative contour **316** is defined in the bone-contacting surface **312** of the anterior wall **306**. Each of the tabs **308**, **310** includes a footpad **309**, **311** extending downwardly from an end of the tabs **308**, **310**. Each of the footpads **309**, **311** includes a bone-contacting or bone-facing surface **318**, **320**, respectively. A negative contour **326**, **328** is defined in the bone-contacting surfaces **318**, **320** of the tabs **308**, **310**, respectively. Each of the negative contours **316**, **326**, **328** is configured to receive a portion of the patient's tibia **304**. For example, the negative contour **316** of the anterior wall **306** is configured to receive a

portion of the anterior side of the patient's tibia **304**. Similarly, the negative contours **326**, **328** of the tabs **308**, **310** are configured to receive a portion of the proximal end of the patient's tibia **304**. As discussed above, the negative contours **316**, **326**, **328** allow the positioning of the tibial cutting block **300** on the patient's tibia **304** in a unique pre-determined location and orientation.

The cutting block **300** includes a cutting guide **330** defined in the anterior wall **306**. Because the anterior wall **306** is designed to wrap around the anterior side of the patient's tibia **304**, the length of the cutting guide **300** is increased. The tibial cutting block **300** also includes a number of pin guides **332** defined in the anterior wall **306**. The pin guides **332** are used as drill guides to establish guide pin holes in the tibia **304** of the patient. A number of guide pins (not shown) may then be inserted into the pin guides **332** and the tibia **304** to secure the cutting block **300** and/or other non-patient specific instruments (not shown) to the tibia **304**.

In use, the tibial cutting block **300** is coupled to the proximal end **334** of the patient's tibia **304** as illustrated in FIG. **25**. Again, because the bone-contacting surfaces **312**, **318**, **320** of the cutting block **300** includes the negative contours **316**, **326**, **328**, the cutting block **300** may be coupled to the tibia **304** in a pre-planned, unique position. When so coupled, a portion of the anterior side of the tibia **304** is received in the negative contour **316** of the anterior wall **306** and a portion of the proximal end of the tibia **304** is received in the negative contours **318**, **320** of the footpads **309**, **311** of the tabs **308**, **310**. As such, the anterior side and the proximal side of the patient's tibia **304** are referenced by the cutting block **300**. After the tibial cutting block **300** has been coupled to the patient's femur **304**, the orthopaedic surgeon may resect the tibia **304** using the cutting block **300**.

Referring now to FIGS. **26-28**, in another embodiment, the customized patient-specific orthopaedic surgical instrument may be embodied as a tibial cutting block **350**. The cutting block **350** is configured to be coupled to a tibia **354** of a patient as illustrated in FIG. **28**. The cutting block **350** includes a body **352** having an anterior wall **356** and a pair of tabs **358**, **360** extending out from the anterior wall **306**. During use, the anterior wall **356** is configured to contact an anterior side of the tibia **354** and the tabs **358**, **360** are configured to extend over the proximal end of the tibia **354** as discussed in more detail below. The anterior wall **356** includes a bone-contacting or bone-facing surface **362** and an outer surface **364**. A negative contour **366** is defined in the bone-contacting surface **362** of the anterior wall **356**. Similarly, each of the tabs **358**, **360** includes a bone-contacting or bone-facing surface **368**, **370** and an outer surface **372**, **374**, respectively. A negative contour **376**, **378** is defined in the bone-contacting surfaces **368**, **370** of the tabs **358**, **360**, respectively. Each of the outer surfaces **372**, **374** of the tabs **358**, **360** have a downward slope to reduce the likelihood of contact between the tabs **358**, **360** and the femur of the patient when the tibia cutting block **350** is secured to the patient's tibia **354**. Each of the negative contours **366**, **376**, **378** is configured to receive a portion of the patient's tibia **354**. For example, the negative contour **366** of the anterior wall **356** is configured to receive a portion of the anterior side of the patient's tibia **354**. Similarly, the negative contours **376**, **378** of the tabs **358**, **360** are configured to receive a portion of the proximal end of the patient's tibia **354**. As discussed above, the negative contours **366**, **376**, **378** allow the positioning of the tibial cutting block **350** on the patient's tibia **354** in a unique pre-determined location and orientation.

The cutting block **350** includes a cutting guide **380** defined in the anterior wall **356**. Because the anterior wall **356** is designed to wrap around the anterior side of the patient's tibia **354**, the length of the cutting guide **380** is increased. Additionally, the block **350** includes a cutting guide support **382** extending outwardly from the anterior wall **356** below the cutting guide **380**. The cutting guide support **382** extends or increases the effective depth of the cutting guide **380**, which may increase the stability of a bone saw blade of an orthopaedic bone saw or other cutting device during use of the block **350**.

The tibial cutting block **350** also includes a number of pin guides **384** defined in the anterior wall **356**. The pin guides **384** are used as drill guides to establish guide pin holes in the tibia **354** of the patient. A number of guide pins (not shown) may then be inserted into the pin guides **384** and the tibia **354** to secure the cutting block **350** to the tibia **354**.

In use, the tibial cutting block **350** is coupled to the distal end **366** of the patient's tibia **354** as illustrated in FIG. **28**. Again, because the bone-contacting surfaces **362**, **368**, **370** of the cutting block **350** includes the negative contours **366**, **376**, **378**, the cutting block **350** may be coupled to the tibia **354** in a pre-planned, unique position. When so coupled, a portion of the anterior side of the tibia **354** is received in the negative contour **366** of the anterior wall **356** and a portion of the proximal end of the tibia **364** is received in the negative contours **376**, **378** of the tabs **358**, **360**. As such, the anterior side and the proximal side of the patient's tibia **354** are referenced by the cutting block **350**. Additionally, in some embodiments, the anterior wall **356** is relieved laterally to provide room for the patellar tendon during use of the block **350**. That is, in some embodiments, the anterior wall **356** includes a notched out region **388** configured to reduce the likelihood of contact of the block **350** and the patellar tendon. After the tibial cutting block **350** has been coupled to the patient's femur **354**, the orthopaedic surgeon may resect the tibia **354** using the cutting block **350**.

Referring now to FIGS. **29-30**, in another embodiment, the customized patient-specific orthopaedic surgical instrument may be embodied as a cutting block **400**. The cutting block **400** is configured to be coupled to a bone **402**, such as the patient's femur or tibia, as illustrated in FIG. **30**. The cutting block includes a body **404** having a bone-contacting or bone-facing surface **406** and an outside surface **408**. The bone-contacting surface **406** includes a negative contour **410** configured to receive a portion of the patient's bone having a corresponding contour. As discussed above, the negative contour **410** of the bone-contacting surface **406** allows the positioning of the cutting block **400** on the patient's bone in a unique pre-determined location and orientation.

The cutting block **400** also includes a number of pin guides **412**. In use, the pin guides **412** are used as drill guides to establish guide pin holes in the bone of the patient for securing a number of guide pins (not shown) to the bone. The cutting block **400** may then be coupled and secured to the patient's bone **402** via the guide pins. The cutting block **400** also includes a cutting guide **414** defined in the body **404** of the block **400**. Illustratively, the cutting guide **414** is a non-captured or open cutting guide. That is, the cutting guide **414** is defined by a sidewall **416** of the body **404** of the cutting block **400**. However, in other embodiments, the cutting guide **414** may be embodied as a captured cutting guide.

In use, the cutting block **400** is coupled to the end **418** of a patient's bone **402** as illustrated in FIG. **30**. Again, because the bone-contacting surface **406** of the cutting block **400** includes negative contour **410**, the block **400** may be

coupled to the patient's bone **402** in a pre-planned, unique position. When so coupled, a portion of the anterior side of the bone **402** is received in the negative contour **410**. Again, because the bone-contacting surface **406** of the cutting block **400** includes the negative contour **410**, the block **400** may be coupled to the bone **402** in a pre-planned, unique position. The cutting block **400** may be secured to the bone **402** via use of a number of guide pins (not shown) received in the pin guides **412** and the bone **402**. After the cutting block **400** has been secured to the patient's bone **402**, the orthopaedic surgeon may use the cutting block **400** to resect a pre-planned amount of the bone **402**. That is, the bone cut made using the cutting guide **414** corresponds to the cutting plane determined during the fabrication of the cutting block **400** (see process step **24** of algorithm **10** described above in regard to FIG. **1**).

In some embodiments, the customized patient-specific orthopaedic surgical instrument may be formed from a number of separate pieces. For example, as illustrated in FIGS. **31-32**, the customized patient-specific orthopaedic surgical instrument may be embodied as a cutting block **450** including an anterior wall piece **452** and an end wall piece **454** separate from the anterior wall piece **454**.

The anterior wall piece **452** includes a bone-contacting or bone-facing surface **456** and an outside surface **458**. The bone-contacting surface **456** includes a negative contour **460** configured to receive a portion of the patient's bone having a corresponding contour. The anterior wall piece **452** also includes a number of apertures **462** defined therethough and configured to receive a number of fasteners or securing devices **466**, such as pins, bolts, or the like, to facilitate the coupling of the anterior wall piece **452** to the end wall piece **454**. The anterior wall piece **452** also includes a cutting guide **468**. Illustratively, the cutting guide **468** is a captured cutting guide, but may be embodied as a non-captured or open cutting guide in other embodiments.

The end wall piece **454** includes a bone-contacting or bone-facing surface **470** and an outside surface **472**. The bone-contacting surface **470** includes a negative contour **474** configured to receive a portion of the patient's bone having a corresponding contour. The end wall piece **454** also includes a number of apertures **476** defined in a sidewall **478**. The apertures **476** are located in the sidewall **478** corresponding to the position of the apertures **462** of the anterior wall piece **452** such that the wall pieces **452**, **454** may be coupled together via the securing devices **466** as discussed below.

Each of the wall pieces **454**, **456** also includes a number of pin guides **480**. In use, the pin guides **480** are used as drill guides to establish guide pin holes in the bone of the patient for securing a number of guide pins (not shown) to the bone. The cutting block **450** may then be coupled and secured to the patient's bone **482** via the guide pins.

In use, the cutting block **450** is configured to be constructed inside the incision site of the patient. That is, the orthopaedic surgeon may insert the anterior wall piece **452** and the end wall piece **454** into the incision site of the patient. Once so inserted, the surgeon may couple the wall pieces **452**, **454** together using the securing device **466** to thereby form the cutting block **450**. The cutting block **450** may then be coupled to the bone **482** of the patient. When so coupled, a portion of the anterior side of the bone **482** is received in the negative contour **460** and a portion of the end of the bone is received in the negative contour **474**. Again, because the bone-contacting surfaces **456**, **470** of the cutting block **450** include the negative contours **460**, **474**, the block **450** may be coupled to the bone **482** in a pre-planned, unique position. The cutting block **450** may be secured to the bone **482** via use of a number of guide pins (not shown) received in the pin guides **480** and the bone **482**. After the cutting block **450** has been secured to the patient's bone **482**, the orthopaedic surgeon may use the cutting block **450** to resect a pre-planned amount of the bone **482**. That is, the bone cut made using the cutting guide **468** corresponds to the cutting plane determined during the fabrication of the cutting block **450** (see process step **24** of algorithm **10** described above in regard to FIG. **1**).

Referring now to FIG. **33**, in another embodiment, the customized patient-specific orthopaedic surgical instrument may be embodied as a cutting block **500**. The cutting block **500** is configured to be coupled to a bone **502**, such as femur or tibia, of a patient. The cutting block **500** includes a body **504**. As shown in FIG. **33**, the body **504** is configured to have a relatively small thickness. The body **504** includes a bone-contacting or bone-facing surface **506** and an outer surface **508**. The bone-contacting surface **506** includes a negative contour **510** configured to receive a portion of the patient's bone **502** having a corresponding contour. As discussed above, the negative contour **510** of the bone-contacting surface **506** allows the positioning of the cutting block **500** on the patient's bone in a unique pre-determined location and orientation.

The cutting block **500** also includes a number of pin guides **512**. In use, the pin guides **512** are used as drill guides to establish guide pin holes in the bone of the patient for securing a number of guide pins (not shown) to the bone. The cutting block **500** may then be coupled and secured to the patient's bone via the guide pins. The cutting block **500** also includes a captured cutting guide **514**. The captured cutting guide **514** is extended outwardly from the body **504** such that the depth of the cutting guide **514** is increased.

In use, the cutting block **500** is configured to be coupled to a patient's bone **502**, such as the femur or tibia. Again, because the bone-contacting surface **506** of the cutting block **500** includes the negative contour **510**, the block **500** may be coupled to the bone **502** in a pre-planned, unique position. The cutting block **500** may be secured to the bone **502** via use of a number of guide pins (not shown) received in the pin guides **512** and the bone **502**. It should be appreciated that the reduced thickness of the body **504** may increase the ability of the surgeon to position the cutting block **500** in the knee joint of the patient. After the cutting block **500** has been secured to the patient's bone **502**, the orthopaedic surgeon may use the cutting block **500** to resect a pre-planned amount of the bone **502**. It should also be appreciated that because the cutting guide **514** has an increased depth, the stability of the bone saw blade of the orthopaedic bone saw or other cutting device may be increased.

Referring now to FIG. **34**, in another embodiment, the customized patient-specific orthopaedic surgical instrument may be embodied as a cutting block **550**. The cutting block **550** is configured to be coupled to a bone **552**, such as femur or tibia, of a patient. The cutting block **550** includes a body **554** having a bone-contacting or bone-facing surface **556** and an outer surface **558**. The bone-contacting surface **556** includes a negative contour **560** configured to receive a portion of the patient's bone **552** having a corresponding contour. As discussed above, the negative contour **560** of the bone-contacting surface **556** allows the positioning of the cutting block **550** on the patient's bone in a unique pre-determined location and orientation.

The cutting block **550** also includes a number of pin guides **562**, **564**. In use, the pin guides **562**, **564** are used as drill guides to establish guide pin holes in the bone of the

patient for securing a number of guide pins (not shown) to the bone. The cutting block **550** may then be coupled and secured to the patient's bone via the guide pins. The pin guides **562** are positioned substantially orthogonal to outside surface **558** of the body **554** of the cutting block **500**. Conversely, the pin guides **564** are positioned at an angle with respect to the outside surface **558** of the body **554**. The cutting block **550** also includes a captured cutting guide **566**.

In use, the cutting block **550** is configured to be coupled to a patient's bone **552**, such as the femur or tibia. Again, because the bone-contacting surface **556** of the cutting block **550** includes the negative contour **560**, the block **550** may be coupled to the bone **552** in a pre-planned, unique position. The cutting block **500** may be secured in one of two configurations relative to the patient's bone. That is, the pin guides **562** may be used to position the block **500** with respect to the patient's bone **502** such that a planar cut may be made with the cutting guide **566**. Alternatively, the pin guides **564** may be used to position the block **550** at an angle with respect to the patient's bone **552** such that an angular or inclined cut may be performed on the patient's bone.

Referring now to FIGS. **35-36**, in another embodiment, the customized patient-specific orthopaedic surgical instrument may be embodied as a 5-in-1 cutting block **600**. The cutting block **600** is configured to be coupled to a bone **602**, such as femur or tibia, of a patient as illustrated in FIG. **36**. The cutting block **600** includes a body **604** having a bone-contacting or bone-facing surface **606** and an outer surface **608**. The bone-contacting surface **606** includes a negative contour **610** configured to receive a portion of the patient's bone **602** having a corresponding contour. As discussed above, the negative contour **610** of the bone-contacting surface **606** allows the positioning of the cutting block **600** on the patient's bone **602** in a unique pre-determined location and orientation. As shown in FIGS. **35** and **36**, the cutting block **600** is generally U-shaped and is configured to reference features on the anterior, distal, and posterior sides of the patient's bone. Specifically, the cutting block **600** has a customized patient-specific negative contour **610** defined in each of an anterior plate **630** which is configured to receive a portion of the anterior side of the patient's bone, a distal plate **632** which is configured to receive a portion of the distal side of the patient's bone, and a posterior plate **634** which is configured to receive a portion of the posterior side of the patient's bone.

The cutting block **600** also includes a number of pin guides **612**. In use, the pin guides **612** are used as drill guides to establish guide pinholes in the bone **602** of the patient for securing a number of guide pins (not shown) to the bone. The cutting block **600** may then be coupled and secured to the patient's bone **602** via the guide pins.

The cutting block **600** also includes five captured cutting guides **614**, **616**, **618**, **620**, **622**. The illustrative cutting guide **614** is a distal cutting guide, the cutting guide **616** is an anterior cutting guide, and the cutting guide **622** is a posterior cutting guide. The cutting guides **618**, **620** are angled cutting guides used to prepare the femoral chamfer. It should be appreciated that the cutting guides **614**, **616**, **618**, **620**, **622** allow the orthopaedic surgeon to perform up to five different bone cuts using the same cutting block **600**.

In use, the cutting block **600** is configured to be coupled to a patient's bone **602**, such as the femur or tibia. Again, because the bone-contacting surface **606** of the cutting block **600** includes negative contour **610**, the block **600** may be coupled to the bone **602** in a pre-planned, unique position. The cutting block **600** may be secured to the bone **602** via use of a number of guide pins (not shown) received in the pin guides **612** and the bone **602**. After the cutting block **600** has been secured to the patient's bone **602** as illustrated in FIG. **36**, the orthopaedic surgeon may use the block **600** to perform any one of a number of resections of the bone **602** using one or more of the cutting guides **614**, **616**, **618**, **620**, **622**. It should be appreciated that, in some embodiments, a single cutting block **600** may be used to orient and complete all femoral bone cuts required for a total knee arthroplasty (TKA).

Referring now to FIG. **37**, in another embodiment, the customized patient-specific orthopaedic surgical instrument **650** may be embodied as a pair of bone-cutting blocks **652**, **654**. The bone-cutting block **652** is a femoral cutting block and is configured to be coupled to a femur **656** of the patient. The bone-cutting block **654** is a tibial cutting block and is configured to be coupled to a tibia **658** of the patient. The bone-cutting block **652** includes a bone-contacting or bone-facing surface **660** having a negative contour (not shown) matching a portion of the contour of the femur **656**. Similarly, the bone-cutting block **654** includes a bone-contacting or bone-facing surface **662** having a negative contour (not shown) matching a portion of the contour of the tibia **658**. As discussed above, the negative contours of the blocks **652**, **654** allow the positioning of the patient-specific cutting blocks **652**, **654** on the patient's respective bone in a unique pre-determined location and orientation.

The femoral cutting block **652** includes a pair of pin guides **664**. In use, the pin guides **664** are used as drill guides to establish guide pin holes in the femur **656**. The cutting block **652** also includes a cutting guide **666**. Illustratively, the cutting guide **666** is a captured cutting guide, but may be embodied as a non-captured or open cutting guide in other embodiments. Similarly, the tibial cutting block **654** includes a pair of pin guides **668** and a cutting guide **670**. As discussed above, the cutting guides **666**, **670** are used to guide a bone saw blade or other cutting device.

The cutting blocks **652**, **654** also form a pair of trial blocks, such that the orthopaedic surgeon may analyze the motion of the patient's knee while performing the resectioning. That is, the distal end **672** of the femoral cutting block **652** includes a pair of trial condylar surfaces **674**, **676** which have concave outer profiles that resemble the natural condyles of a femur. The proximal end **678** of the tibial cutting block **654** includes a pair of trial articular surfaces **680**, **682** which have convex outer profiles which resemble the natural articular surfaces of the condyles of a tibia. The trial articular surfaces **680**, **682** are configured to receive the trial condylar surfaces **674**, **676** of the tibial cutting block **652**.

In use, the cutting blocks **652**, **654** are configured to be coupled to patient's femur **656** and tibia **658**, respectively. Again, because each of the blocks **652**, **654** include the respective negative contours, the blocks **652**, **654** may be coupled to the respective bone **656**, **658** in a pre-planned, unique position such that the cutting guides **666**, **670** are positioned in a desired location relative to the respective bone **656**, **658**. After the cutting blocks **652**, **654** have been secured to the femur **656** and tibia **658** of the patient, the orthopaedic surgeon may resect the femur **656** and the tibia **658** using the cutting guides **666**, **670** with a bone saw or other cutting device. To do so, the surgeon may insert a bone saw blade of the bone saw into the cutting guide **666**, **670**. It should be appreciated that because the position of the cutting guides **666**, **670** are pre-determined due to the configuration of the respective bone cutting blocks **652**, **654**, any bone cuts made using the patient-specific cutting blocks **652**, **654** correspond to the predetermined bone cutting planes (see process step **24** of algorithm **10** described above

in regard to FIG. **1**). Additionally, the surgeon may manipulate the joint to analysis the movement of the joint using the trial-shaped ends of the blocks **652**, **654**.

Referring now to FIG. **38**, in another embodiment, the customized patient-specific orthopaedic surgical instrument **700** may be embodied as a pair of bone-cutting blocks **702**, **704**. The bone-cutting block **702** is a femoral cutting block and is configured to be coupled to a femur **706** of the patient. The bone-cutting block **704** is a tibial cutting block and is configured to be coupled to a tibia **708** of the patient. The bone-cutting block **702** includes a bone-contacting or bone-facing surface **710** having a negative contour (not shown) matching a portion of the contour of the femur **706**. Similarly, the bone-cutting block **704** includes a bone-contacting or bone-facing surface **712** having a negative contour (not shown) matching a portion of the contour of the tibia **708**. As discussed above, the negative contours of the blocks **702**, **704** allow the positioning of the patient-specific cutting blocks **702**, **704** on the patient's respective bone in a unique pre-determined location and orientation.

The femoral cutting block **702** includes a pair of pin guides **714**. In use, the pin guides **714** are used as drill guides to establish guide pin holes in the femur **706**. The cutting block **702** also includes a cutting guide **716**. Illustratively, the cutting guide **716** is a captured cutting guide, but may be embodied as a non-captured or open cutting guide in other embodiments. Similarly, the tibial cutting block **704** includes a pair of pin guides **718** and a cutting guide **720**. As discussed above, the cutting guides **716**, **720** are used to guide a bone saw blade or other cutting device.

The cutting blocks **702**, **704** are coupled to each other via a mechanical linkage **722**. The mechanical linkage **722** may be embodied as any number of threaded bolts, gears, and the like for performing the functions described herein. Namely, rotation of the threaded shafts of the mechanical linkage **722** in one direction or the other moves the cutting blocks **702**, **704** away from or toward each other. A pair of thumbwheels **724** are operably coupled to the mechanical linkage **722**. The thumbwheels **724** are usable by the surgeon to operate the linkage **722** to move the cutting blocks **702**, **704** away from or toward each other by, for example, rotating the threaded shafts of the mechanical linkage **722**. That is, the thumbwheels **724** may be operated to move the femoral cutting block **702** in the direction of arrow **726** and the tibial cutting block **704** in the direction of arrow **728**. In some embodiments, the mechanical linkage **722** may be positioned in a housing **730** positioned between the cutting blocks **702**, **704**.

In use, the cutting blocks **702**, **704** are configured to be coupled to patient's femur **706** and tibia **708**, respectively. Again, because each of the blocks **702**, **708** include the respective negative contours, the blocks **702**, **708** may be coupled to the respective bone **706**, **708** in a pre-planned, unique position such that the cutting guides **716**, **720** are positioned in a desired location relative to the respective bone **706**, **708**. After the cutting blocks **702**, **704** have been secured to the femur **706** and tibia **708** of the patient, the orthopaedic surgeon may operate the thumbwheels **724** to adjust the relative position of the cutting blocks **702**, **704** (e.g., move the blocks **702**, **704** toward or away from each other).

After the position of the cutting blocks **702**, **704** relative to each other has been adjusted, the surgeon may resect the femur **706** and the tibia **708** using the cutting guides **716**, **720** with a bone saw or other cutting device. It should be appreciated that because the position of the cutting guides **716**, **720** are pre-determined due to the configuration of the respective bone cutting blocks **702**, **704** any bone cuts made using the patient-specific cutting blocks **702**, **704** correspond to the predetermined bone cutting planes (see process step **24** of algorithm **10** described above in regard to FIG. **1**).

Referring now to FIG. **39**, in another embodiment, the customized patient-specific orthopaedic surgical instrument may be embodied as a cutting block **750** configured to be coupled to or otherwise contact the femur **752** and/or tibia **753** of the patient. The cutting block **750** includes a body **754** having a bone-contacting or bone-facing surface **756** and an outer surface **758**. In the illustrative embodiment shown in FIGS. **39-41**, the body **754** is monolithic. The bone-contacting surface **756** includes a negative contour **760** configured to receive a portion of the patient's bone **752**, **753** having a corresponding contour. As discussed above, the negative contour **760** of the bone-contacting surface **756** allows the positioning of the cutting block **750** on the patient's bone in a unique pre-determined location and orientation.

The cutting block **750** also includes a number of pin guides **762**. In the illustrative embodiment of FIG. **39**, the pin guides **762** are positioned on the body **754** of the cutting block **750** such that the cutting block **750** may be secured to the femur **752**. That is, the guides **762** may be used as a drill guide to establish guide pin holes in the femur **752** of the patient for securing a number of guide pins **764** to the femur **752**. The cutting block **750** may then be coupled and secured to the femur **752** via the guide pins **764**. The cutting block **750** also includes a tibial cutting guide **766**. Illustratively, the cutting guide **766** is a captured cutting guide, but may be embodied as a non-captured or open cutting guide in other embodiments.

In use, the cutting block **750** is configured to be coupled to the patient's femur **752** and tibia **753**. That is, the guides **762** may be used to secure the cutting block **750** to the femur using a number of guide pins **764**. The cutting block **750**, however, is not secured to the patient's tibia **753**. Again, because the bone-contacting surface **756** of the block **750** includes the negative contour **760**, the block **750** may be coupled to the femur **752** and tibia **753** in a pre-planned, unique position. After the cutting block **750** has been secured to the patient's femur **752** via the guide pins **764**, the surgeon may resect the patient's tibia **753** using the cutting guide **766**. Because the cutting block **750** references the femur **752** and the tibia **753**, the stability of the block **750** may be increased relative to cutting blocks that reference only the tibia **753**. That is, because the femur **752** provides a larger surface area to reference with the block **750** relative to referencing only the tibia **753**, the stability of the cutting block **750** may be improved. Additionally, in the illustrative embodiment of FIG. **39**, the cutting block **750** is secured to the femur **752**, rather than the tibia, to further stabilize the block.

In other embodiments, the cutting block **750** may be secured to the tibia **753** rather than the femur **752** as illustrated in FIG. **40**. In such embodiments, the cutting block **750** includes a tibial pin guide **786** for securing the block **750** to the tibia **753** via a number of guide pings **788**. Although the cutting block **750** is secured to the tibia **753**, the stability of the block **750** may be increased relative to cutting blocks that reference only the tibia **753** because the cutting block **750** references the femur **752** and the tibia **753** as discussed above.

Additionally, in other embodiments, the cutting block **750** may be configured to be secured to the femur **752** and the tibia **753** as illustrated in FIG. **41**. In such embodiments, the cutting block includes the femoral pin guides **762** and the tibial pin guides **766**. Additionally, the cutting block **750**

may include a femoral cutting guide **790** in addition to the tibia cutting guide **766**. In such embodiments, the cutting block **750** may be used to resect the femur **752** and/or the tibia **753**. Additionally, in such embodiment, the cutting block **750** may include a tongue **792** extending from the body **754**. The tongue **792** is configured to be received between the femur **752** and the tibia **753** to further stabilize the cutting block **750**. Again, because the cutting block **750** references the femur **752** and the tibia **753**, the stability of the block **750** may be increased relative to cutting blocks that reference only the femur **752** or the tibia **753**.

Referring now to FIGS. **42-44**, in another embodiment, the customized patient-specific orthopaedic surgical instrument **800** may be embodied as a pair of bone-cutting blocks **802**, **804**. The bone-cutting block **802** is a femoral cutting block and is configured to be secured to a femur **806** of the patient. The bone-cutting block **804** is a tibial cutting block and is configured to be coupled to or otherwise confront a tibia **808** of the patient. The cutting blocks **802**, **804** are coupled to each via a hinge **810** secured to an end **812**, **814** of each block **802**, **804**, respectively.

The femoral cutting block **802** includes a bone-contacting or bone-facing surface **816** having a negative contour **818** matching a portion of the contour of the femur **806**. As discussed above, the negative contour **818** of the femoral cutting block **802** allows the positioning of the patient-specific femoral cutting block **802** on the patient's femur **806** in a unique pre-determined location and orientation. The tibia block **804** also includes a bone-contacting or bone-facing surface **820**. In some embodiments, the bone-contacting surface **820** may be substantially planar. Alternatively, in other embodiments, the bone-contacting surface **820** may include a negative contour (not shown) matching a portion of the contour of the patient's tibia **808**.

The femoral cutting block **802** includes a pair of pin guides **822**. In use, the pin guides **822** are used as drill guides to establish guide pin holes in the femur **806**. The femoral cutting block **802** also includes a distal femoral cutting guide **824**. Illustratively, the cutting guide **824** is a captured cutting guide, but may be embodied as a non-captured or open cutting guide in other embodiments. Similarly, the tibial cutting block **804** includes a proximal tibial cutting guide **826**. Additionally, in some embodiments, the tibial cutting block **804** may include a posterior femoral cutting guide **828**.

In use, the femoral cutting block **802** is coupled to the patient's femur **806**. Again, because the cutting block **802** includes the negative contour **818**, the femoral cutting block **802** may be coupled to the femur **806** in a pre-planned, unique position. The femoral cutting block **802** is secured to the patient's femur **806** in extension using the pin guides **822**. While the patient's leg is in extension, the orthopaedic surgeon may resect the distal end of the femur **806** using the femoral cutting guide **824**. The orthopaedic surgeon may then position the patient's leg in flexion as illustrated in FIG. **43**. When the patient's leg is moved to flexion, the tibial cutting block **804** follows the tibia **808** and is positioned relative to the tibia **808** such that the surgeon may perform a proximal cut on the tibia **808** using the tibial cutting guide **826**. In embodiments wherein tibial cutting block **804** also includes the posterior femoral cutting guide **828**, the orthopaedic surgeon may resect the posterior condyles of the femur **806** using the guide **828**.

In some embodiments, the tibial cutting block **804** may be coupled to the femoral cutting block **802** via a hinge **830** positioned on the side of the femoral cutting block **802** as illustrated in FIG. **44**. That is, the femoral cutting block **802** and the tibial cutting block **804** may be coupled by the hinge **830**, which is positioned toward the medial or lateral side of the blocks **802**, **804**. In such a configuration, the femoral cutting block **802** may be configured to wrap around the distal end of the femur **806** as shown in FIG. **44** to provide additional stability to the cutting blocks **802**, **804**.

Referring now to FIGS. **45-46**, in another embodiment, the customized patient-specific orthopaedic surgical instrument may be embodied as a milling guide **850**. The milling guide **850** is configured to be coupled to a bone **852**, such as femur or tibia, of a patient. The milling guide **850** includes a bone-contacting or bone-facing surface **856** and an outer surface **858**. The bone-contacting surface **856** includes a negative contour **860** (see FIG. **46**) configured to receive a portion of the patient's bone **852** having a corresponding contour. As discussed above, the negative contour **860** of the bone-contacting surface **856** allows the positioning of the milling guide **850** on the patient's bone in a unique pre-determined location and orientation.

The milling guide **850** also includes a number of apertures **862**. The apertures **862** are sized to guide the burr **864** of a milling machine. In use, the milling guide **850** may be coupled to the end of a patient's bone **852**. Again, because the bone-contacting surface **856** of the milling guide **850** includes the negative contour **860**, the guide **850** may be coupled to the bone **852** in a pre-planned, unique position. After the milling guide **850** has been coupled to the bone **852**, the burr **864** may be inserted into one of the apertures **862** and operated to mill the bone as desired.

Referring now to FIG. **47**, in another embodiment, the customized patient-specific orthopaedic surgical instrument may be embodied as a burring guide **900**. The burring guide **900** is configured to be coupled to the end of a burring or milling machine. For example, the burring guide **900** may be coupled to the shaft **902** of the burring machine via a bushing **904**. The busing **904** allows the shaft **902** and the burr end **906** of the burring machine to rotate while maintaining the burring guide **900** in a fixed position against the bone.

The burring guide **900** includes a body **910** having a bone-contacting or bone-facing surface **912**. The bone-facing surface **912** includes a negative contour **913** defined therein. The negative contour **913** of the bone-contacting surface **912** is configured to receive a portion of the patient's bone **914** when the burring guide **900** is contacted thereto. Additionally, the bone-facing surface **912** includes an aperture **916** in which the burr end **906** is received.

Referring now to FIG. **48**, in another embodiment, the customized patient-specific orthopaedic surgical instrument may be embodied as a burring block **950**. The burring block **950** is configured to be coupled to a bone **952**, such as femur or tibia, of a patient. The burring block **950** includes a body **954** having a bone-contacting or bone-facing surface **956** and an outer surface **958**. The bone-contacting surface **956** includes a negative contour (not shown) configured to receive a portion of the patient's bone **952** having a corresponding contour. As discussed above, the negative contour of the bone-contacting surface **956** allows the positioning of the burring block **950** on the patient's bone **952** in a unique pre-determined location and orientation.

The burring block **950** also includes a number of pin guides **960**. In use, the pin guides **960** are used as drill guides to establish guide pin holes in the bone of the patient for securing a number of guide pins (not shown) to the bone. The burring block **950** may then be coupled and secured to the patient's bone **952** via the guide pins.

The burring block **950** also includes a burring aperture **962** defined in the body **954**. The burring aperture **962** is sized to allow the burring end **964** of a burr machine to be inserted therein. That is, the burring aperture **962** has a width **966** sufficient to accept the diameter of the burring end **964** in addition to the portion of the bone **952** that extends therein. The inner wall **968**, which defines the aperture **962**, forms a burring guide. That is, during use, the shaft **970** of the burring machine may be run along the inner wall **968** as a guide to generate a planar resection on the bone **952**.

Referring now to FIGS. **49-52**, in another embodiment, the customized patient-specific orthopaedic surgical instrument **1000** includes a ligament balancer **1002** and a patient-specific femoral cutting block **1004** coupled to the ligament balancer **1002**. The ligament balancer **1002** includes a tibial base plate **1006** and a pair of femoral paddles **1008**, **1010**, which are received in corresponding cylindrical housings **1012**, **1014**. A pair of knobs or other control devices **1016**, **1018** are positioned at the base of the housings **1012**, **1014** and are operatively coupled to the femoral paddles **1008**, **1010**. The knobs **1016**, **1018** may be used to independently move each femoral paddles **1008**, **1010** away from or toward the tibial base plate **1006** and tense the knee joint under proper tension to cause the femur to move to its optimal rotation with respect to the tibia.

The cutting block **1004** is configured to be coupled to a bone **1020**, such as femur or tibia, of a patient as illustrated in FIG. **50**. The cutting block **1004** includes a body **1022** having a bone-contacting or bone-facing surface **1024** and an outer surface **1026**. The bone-contacting surface **1024** includes a negative contour **1028** configured to receive a portion of the patient's bone **1020** having a corresponding contour. As discussed above, the negative contour **1028** of the bone-contacting surface **1024** allows the positioning of the cutting block **1004** on the patient's bone **1020** in a unique pre-determined location and orientation.

The cutting block **1004** also includes a femoral cutting guide **1030**. The illustrative cutting guide **1030** is a captured cutting guide, but may be embodied as a non-captured or open cutting guide in other embodiments. The cutting block **1004** also includes a number of pin guides **1032** In use, the pin guides **1032** are used as drill guides to establish guide pin holes in the bone **1020** of the patient for securing a number of guide pins (not shown) to the bone.

The cutting block **1004** is coupled to the ligament balancer **1002** via a bracket **1034**. The bracket **1034** includes a pair of apertures **1036** in which are received a pair of pins **1038**. The body **1022** of the cutting block **1004** includes a pair of inwardly curving, elongated apertures **1040**. The pins **1038** are received in the elongated apertures **1040** of the cutting block **1004** and secured into the bone **1020** of the patient. Additionally, the bracket **1034** orients the pair of pins **1038** in a line that is parallel to proximal surface of the tibia **1103**. It should be appreciated that the elongated apertures **1040** allow the cutting block **1004** to be rotated relative to the ligament balancer **1002** as described below.

In use, the cutting block **1004** is coupled to the end of a patient's bone **1020**, such as the femur. Again, because the bone-contacting surface **1024** includes the negative contour **1028**, the block **1004** may be coupled to the bone **1020** in a pre-planned, unique position. The cutting block **1004** may be secured to the bone **1020** via use of the guide pins **1038**. That is, the guide pins **1038** may be inserted into the elongated apertures **1040** and into the bone **1020** of the patient. The ligament balancer **1002** may then be coupled to the patient's bony anatomy. To do so, the base **1006** is placed on the proximal end of the patient's tibia and each paddle **1008**, **1010** engages a condyle of the patient's femur **1020**. The apertures **1036** of the bracket **1034** receive portions of the guide pins **1038**, which extend from the elongated openings **1040** of the cutting block **1004**. The orthopaedic surgeon may then adjust the ligament balancer as desired and resect the patient's bone **1020** using the femoral cutting guide **1030**.

In other embodiments, the ligament balancer **1002** may be configured to reference an intramedullar rod **1102** as illustrated in FIG. **51-52**. In such embodiments, the bracket **1034** includes a receiver **1104** configured to couple to the rod **1102**. The intramedullar rod **1102** references the intramedullary canal of the femur **1020**. The bracket **1034** of the ligament balancer **1002** provides a pivot point **1106** about which the femur **1020** may rotate while maintaining the pins **1038** in an approximate parallel orientation relative to the proximal surface **1103** of the patient's tibia

Referring now to FIGS. **53-54**, in another embodiment, the customized patient-specific orthopaedic surgical instrument may be embodied as a femoral cutting block **1200**. The cutting block **1200** is configured to be coupled to a femur **1204** of a patient as illustrated in FIG. **54**. The cutting block **1200** includes a body **1202** having an anterior wall **1206** and a pair of distal tabs **1208**, **1210** extending out from the anterior wall **1206**. During use, the anterior wall **1206** is configured to contact an anterior side of the femur **1204** and the distal tabs **1208**, **1210** are configured to extend over the distal end of the femur **1204** as discussed in more detail below. The tabs **1208**, **1210** each include a footpad **1216**, **1218**, respectively. The footpads **1216**, **1218** are embodied as oval rings, each having a central recess **1217**. As discussed in more detail below, the footpads **1216**, **1218** are negatively contoured to contact a portion of the distal end of the femur **1204**. In other embodiments, the footpads **1216**, **1218** may have other configurations such as a circular shape.

The anterior wall **1206** includes a bone-contacting or bone-facing surface **1212** and an outer surface **1214**. A negative contour **1224** is defined in the bone-contacting surfaces **1212** of the anterior wall of the body **1202**. The negative contour **1224** is configured to receive a portion of the patient's femur **1204** having a corresponding contour. As discussed above, the negative contour **1224** of the bone-contacting surface **1212** allows the positioning of the cutting block **1200** on the patient's femur **1204** in a unique pre-determined location and orientation.

The cutting block **1200** includes a cutting guide **1226** defined in the anterior wall **1206**. The thickness of the anterior wall **1206** around the cutting guide **1226** is increased relative to other portions of the wall **1206** to increase the depth of the cutting guide **1226**. Illustratively, the cutting guide **1226** is a captured cutting guide. The femoral cutting block **1200** also includes a number of pin guides **1228** defined in the anterior wall **1206** and each distal tab **1208**, **1210**. The pin guides **1228** are used as drill guides to establish guide pin holes in the femur **1204** of the patient. Illustratively, the pin guides **1228** are divergent to prevent the cutting block **1200** from loosening under the vibrations of an orthopaedic bone saw. A number of guide pins (not shown) may then be inserted into the pin guides **1228** and the femur **1204** to secure the cutting block **1200** to the femur **1204**. In one particular embodiment, the pin guides **1228** located on the distal tabs **1208**, **1210** are used only as drill guides to establish pin holes in the femur **1204** for subsequent orthopaedic instruments.

In use, the femoral cutting block **1200** is coupled to the distal end **1230** of the patient's femur **1204** as illustrated in FIG. **54**. Again, because the bone-contacting surface **1212** of

the cutting block **1200** includes the negative contour **1224**, the block **1200** may be coupled to the femur **1204** in a pre-planned, unique position. When so coupled, a portion of the anterior side of the femur **1204** is received in the negative contour **1224** of the anterior wall **1206** of the block **1200** and the distal tabs **1208**, **1210** extend over the end of the femur **1204**. The footpads **1216**, **1218** of the tabs **1208**, **1210** contact the distal end of the patient's femur **1204**. However, the portions of the femur **1204** over which the recess **1217** is positioned are not referenced. That is, the recess **1217** may or may not receive portions of the patient's femur **1204**. As such, the footpads **1216**, **1218** may be positioned relative to the body **1202** of the cutting block **1200** such that the recess **1217** are positioned over portions of the femur **1204** that are not visible in the medical images (see process steps **12**, **20**, **24** of the algorithm **10** illustrated in and described above in regard to FIG. **1**). As such, those portions of the femur **1204** that are not reproduced in the medical images because, for example, of limitations of the imaging modality or aspects of the patient's particular bony anatomy, are not referenced to improve the fitting of the block **1200**. After the femoral cutting block **1200** has been coupled to the patient's femur **1204**, the orthopaedic surgeon may resect the femur **1204** using the cutting block **1200**.

Referring now to FIGS. **55-57**, in another embodiment, the customized patient-specific orthopaedic surgical instrument may be embodied as a femoral cutting block **1300**. The cutting block **1300** is configured to be coupled to a femur of a patient similar to the cutting block **100** described above. The cutting block **1300** includes a body **1302** configured to be coupled to the anterior side of the patient's femur and two arms or tabs **1304**, **1306**, which extend away from the body **1302** in a posteriorly direction. The tabs **1304**, **1306** are configured to wrap around a distal end of the femur as discussed in more detail below. Each of the tabs **1304**, **1306** includes an inwardly-curving or otherwise superiorly extending lip **1308**, **1310**, respectively, which references the posterior condyles of the femur. The cutting block **1300** may be formed from any suitable material. For example, the cutting block **1300** may be formed from a material such as a plastic or resin material. In some embodiments, the cutting block **1300** may be formed from a photo-curable or laser-curable resin. In one particular embodiment, the cutting block **1300** is formed from a Vero resin, which is commercially available from Objet Geometries Ltd. of Rehovot, Israel using a rapid prototype fabrication process. However, the cutting block **1300** may be formed from other materials in other embodiments. For example, in another particular embodiment, the cutting block **1300** is formed from a polyimide thermoplastic resin, such as a Ultem resin, which is commercially available from Saudi Basic Industries Corporation Innovative Plastics of Riyhadh, Saudi Arabia.

The body **1302** includes a bone-contacting or bone-facing surface **1312** and an outer surface **1314** opposite the bone-facing surface **1312**. The outer surface **1314** includes a depression or recessed area **1316**, which provides an indication to a surgeon where to apply pressure to the body **1302** when coupling the cutting block **1300** to the patient's femur. Additionally, a number of guide pin holes or passageways **1318** are defined through the body **1302** and have a diameter sized to receive respective guide pins to secure the block **1300** to the patient's femur. In some embodiments, one or more of the guide pin holes **1318** may be oblique or otherwise angled with respect to the remaining guide pin holes **1318** to further secure the block **1300** to the patient's bone.

The body **1302** includes a modular cutting guide **1320**. That is, the body **1302** includes a cutting guide receiver slot **1322** in which the cutting guide **1320** is received. A latch **1324** or other locking device secures the cutting guide **1320** in place in the cutting guide receiver slot **1322**. As such, one of a number of different cutting guides **1320** having a cutting guide slot **1326** defined in various offset positions may be coupled to the body **1302** to allow a surgeon to selectively determine the amount of bone of the patient's bone is removed during the bone cutting procedure. For example, a cutting guide **1320** having a cutting guide slot **1326** offset by +2 millimeters, with respect to a neutral reference cutting guide **1320**, may be used if the surgeon desires to remove a greater amount of the patient's bone. The cutting guide **1320** may be formed from the same material as the body **1302** or from a different material. In one particular embodiment, the cutting guide **1320** is formed form a metallic material such as stainless steel.

The bone-facing surface **1312** of the body **1302** includes a negative contour **1328** configured to receive a portion of the anterior side of the patient's femur having a corresponding contour. As discussed above, the customized patient-specific negative contour **1328** of the bone-contacting surface **1312** allows the positioning of the cutting block **1300** on the patient's femur in a unique pre-determined location and orientation.

As discussed above, the arms or tabs **1304**, **1306** extend posteriorly from the body **1300** to define a U-shaped opening **1305** therebetween. The tabs **1304**, **1306** may extend from the body the same distance or a different distance. For example, as shown in FIG. **56**, the tab **1304** extends from the body **1300** a distance **1330** and the tab **1306** extends from the body **1330** a distance **1332**, which is greater than the distance **1330**. Each of the tabs **1304**, **1306** includes a respective guide pin holes or passageways **1338**, **1340** defined therethrough. The guide pin holes **1338**, **1340** have a diameter sized to receive respective guide pin to further secure the block **1300** to the patient's femur.

The tabs **1304**, **1306** include a bone-contacting or bone-facing surface **1340**, **1342**, respectively, and an outer surface **1344**, **1346**, respectively, opposite the bone-facing surface **1340**, **1342**. The bone-facing surface **1340** of the tab **1304** includes a negative contour **1348** configured to receive a portion of the distal side of the patient's femur having a respective corresponding contour. Similarly, the bone-facing surface **1342** of the tab **1306** includes a negative contour **1350** configured to receive a portion of the distal side of the patient's femur having a respective corresponding contour.

The lips **1308**, **1310** of the tabs **1304**, **1306** also include a bone-contacting or bone-facing surface **1352**, **1354**, respectively, and an outer surface **1356**, **1358**, respectively, opposite the bone-facing surface **1352**, **1354**. The bone-facing surface **1352** of the lip **1308** includes a negative contour **1360** configured to receive a portion of the posterior side of the patient's femur having a respective corresponding contour. Similarly, the bone-facing surface **1354** of the lip **1310** includes a negative contour **1362** configured to receive a portion of the distal side of the patient's femur having a respective corresponding contour. Each the lips **1308**, **1310** include a lateral slot **1364** that forms a saw relieve slot and is configured to provide an amount of clearance for the bone saw blade used to remove a portion of the patient's bone. That is, during the performance of the orthopaedic surgical procedure, a distal end of the bone saw blade may be received in the slot **1364**.

In some embodiments, the negative contours **1328**, **1348**, **1350**, **1356**, **1358** of the bone-contacting surfaces **1312**,

1340, 1342, 1352, 1354 of the cutting block 1300 may or may not match the corresponding contour surface of the patient's bone. That is, as discussed above, the negative contours 1328, 1348, 1350, 1356, 1358 may be scaled or otherwise resized (e.g., enlarged) to compensate for the patient's cartilage or lack thereof.

In use, the femoral cutting block 1300 is coupled to the distal end of the patient's femur. Again, because the bone-contacting surfaces 1312, 1340, 1342, 1352, 1354 of the cutting block 1300 include the negative contours 1328, 1348, 1350, 1356, 1358 the block 1300 may be coupled to the patient's femur in a pre-planned, unique position. When so coupled, the tabs 1304, 1306 wrap around the distal end of the patient's femur and the lips 1308, 1310 of the tabs 1304, 1306 wrap around the posterior side of the patient's femur. Additionally, when the block 1300 is coupled to the patient's femur, a portion of the anterior side of the femur is received in the negative contour 1328 of the body 1302, a portion of the distal side of the patient's femur is received in the negative contours 1348, 1350 of the tabs 1304, 1306, and a portion of the posterior side of the femur is received in the negative contours 1356, 1358 of the lips 1308, 1310. As such, the anterior, distal, and posterior surfaces of the patient femur are referenced by the femoral cutting block 1300.

Referring now to FIGS. 58-60, in another embodiment, the customized patient-specific orthopaedic surgical instrument may be embodied as a femoral cutting block 1400. The cutting block 1400 is configured to be coupled to a femur of a patient similar to the cutting block 100 described above. The cutting block 1400 includes a body 1402 configured to be coupled to the anterior side of the patient's femur and two arms or tabs 1404, 1406, which extend away from the body 1402 in a posteriorly direction. The tabs 1404, 1406 are configured to wrap around a distal end of the femur as discussed in more detail below. Each of the tabs 1404, 1406 includes an inwardly-curving or otherwise superiorly extending lip 1408, 1410, respectively, which references the posterior condyles of the femur. Similar to the cutting block 1300, the cutting block 1400 may be formed from any suitable material. For example, the cutting block 1400 may be formed from a material such as a plastic or resin material. In one particular embodiment, the cutting block 1400 is formed from Vero resin using a rapid prototype fabrication process. However, the cutting block 1400 may be formed from other materials in other embodiments. For example, in another particular embodiment, the cutting block 1400 is formed from a polyimide thermoplastic resin, such as a Ultem resin, which is commercially available from Saudi Basic Industries Corporation Innovative Plastics of Riyhadh, Saudi Arabia.

The body 1402 includes a bone-contacting or bone-facing surface 1412 and an outer surface 1414 opposite the bone-facing surface 1412. The outer surface 1414 includes a number of guide holes or passageways 1416 defined therethrough. A guide pin bushing 1418 is received in each guide hole 1416. The guide pin bushings 1418 include an internal passageway 1420 sized to receive a respective guide pin to secure the block 1400 to the patient's femur. As shown in FIG. 60, the guide passageways 1416 extends from the outer surface 1414 to the bone-facing surface 1412 and is counterbored on the bone-facing surface 1412. That is, the passageway 1416 has an opening 1422 on the bone facing surface 1412 having a diameter greater than the diameter of an opening 1424 on the outer surface 1414.

The cutting guide 1400 includes a cutting guide 1430 secured to the body 1402. In one particular embodiment, the cutting guide 1430 is overmolded to the body 1402. The cutting guide 1430 includes a cutting guide slot 1432. The cutting guide 1430 may be formed from the same material as the body 1402 or from a different material. In one particular embodiment, the cutting guide 1430 is formed from a metallic material such as stainless steel. The body 1402 also includes a window or opening 1434 defined therethough. The opening 1434 allows a surgeon to visualize the positioning of the block 1400 on the patient's femur by viewing portions of the femur through the opening 1434. Additionally, the opening 1434 may reduce the amount of air pockets or other perfections created during the fabrication of the block 1400. In the illustrative embodiment, the opening 1434 extends from the cutting guide 1400 to a point more superior than the superior-most point 1436 of the guide pin bushings 1418. However, in other embodiments, the cutting block 1400 may include windows or openings formed in the body 1402 having other shapes and sizes.

The bone-facing surface 1412 of the body 1402 includes a negative contour 1438 configured to receive a portion of the anterior side of the patient's femur having a corresponding contour. As discussed above, the customized patient-specific negative contour 1438 of the bone-contacting surface 1412 allows the positioning of the cutting block 1400 on the patient's femur in a unique pre-determined location and orientation.

The tabs 1404, 1406 include a bone-contacting or bone-facing surface 1440, 1442, respectively, and an outer surface 1444, 1446, respectively, opposite the bone-facing surface 1440, 1442. The bone-facing surface 1440 of the tab 1404 includes a negative contour 1448 configured to receive a portion of the distal side of the patient's femur having a respective corresponding contour. Similarly, the bone-facing surface 1442 of the tab 1406 includes a negative contour 1450 configured to receive a portion of the distal side of the patient's femur having a respective corresponding contour.

As discussed above, the arms or tabs 1404, 1406 extend posteriorly from the body 1400 to define a U-shaped opening 1405 therebetween. The tabs 1404, 1406 may extend from the body 1400 the same distance or a different distance. For example, as shown in FIG. 59, the tab 1404 extends from the body 1400 a distance 1452 and the tab 1406 extends from the body 1400 a distance 1454, which is less than the distance 1452. Each of the tabs 1404, 1406 includes a respective guide hole or passageway 1460 defined therethrough. A guide pin bushing 1462 is received in each guide hole 1460. The guide pin bushings 1462 include an internal passageway 1464 sized to receive a respective guide pin to further secure the block 1400 to the patient's femur. Similar to the guide passageways 1416, the guide passageways 1460 may be counterbored on the bone-facing surface 1440, 1442 of the tabs 1404, 1406.

The lips 1408, 1410 of the tabs 1404, 1406 also include a bone-contacting or bone-facing surface 1472, 1474, respectively, and an outer surface 1476, 1478, respectively, opposite the bone-facing surface 1472, 1474. The bone-facing surface 1472 of the lip 1408 includes a negative contour 1480 configured to receive a portion of the posterior side of the patient's femur having a respective corresponding contour. Similarly, the bone-facing surface 1474 of the lip 1410 includes a negative contour 1482 configured to receive a portion of the distal side of the patient's femur having a respective corresponding contour. Each the lips 1408, 1410 includes a lateral slot 1484 that forms a saw relieve slot and is configured to provide an amount of clearance for the bone saw blade used to remove a portion of the patient's bone. That is, during the performance of the

orthopaedic surgical procedure, a distal end of the bone saw blade may be received in the slot **1484**.

In some embodiments, the negative contours **1438**, **1448**, **1450**, **1480**, **1482** of the bone-contacting surfaces **1412**, **1440**, **1442**, **1472**, **1474** of the cutting block **1400** may or may not match the corresponding contour surface of the patient's bone. That is, as discussed above, the negative contours **1438**, **1448**, **1450**, **1480**, **1482** may be scaled or otherwise resized (e.g., enlarged) to compensate for the patient's cartilage or lack thereof.

In use, the femoral cutting block **1400** is coupled to the distal end of the patient's femur. Again, because the bone-contacting surfaces **1412**, **1440**, **1442**, **1472**, **1474** of the cutting block **1400** include the negative contours **1438**, **1448**, **1450**, **1480**, **1482**, the block **1400** may be coupled to the patient's femur in a pre-planned, unique position. When so coupled, the tabs **1404**, **1406** wrap around the distal end of the patient's femur and the lips **1408**, **1410** of the tabs **1404**, **1406** wrap around the posterior side of the patient's femur. Additionally, when the block **1400** is coupled to the patient's femur, a portion of the anterior side of the femur is received in the negative contour **1438** of the body **1402**, a portion of the distal side of the patient's femur is received in the negative contours **1448**, **1450** of the tabs **1404**, **1406**, and a portion of the posterior side of the femur is received in the negative contours **1480**, **1482** of the lips **1408**, **1410**. As such, the anterior, distal, and posterior surfaces of the patient femur are referenced by the femoral cutting block **1400**.

Referring now to FIGS. **61-63**, in another embodiment, the customized patient-specific orthopaedic surgical instrument may be embodied as a tibial cutting block **1500**. The cutting block **1500** is configured to be coupled to a tibia of a patient similar to the cutting block **300** described above. The cutting block **1500** includes a body **1502** configured to be coupled to the anterior side of the patient's tibia and two arms or tabs **1504**, **1506**, which extend away from the body **1502** in a posteriorly direction. The tabs **1504**, **1506** are configured to wrap over a proximal end of the tibia as discussed in more detail below. The cutting block **1500** may be formed from any suitable material. For example, the cutting block **1500** may be formed from a material such as a plastic or resin material. In one particular embodiment, the cutting block **1500** is formed from Vero resin using a rapid prototype fabrication process. However, the cutting block **1500** may be formed from other materials in other embodiments. For example, in another particular embodiment, the cutting block **1500** is formed from a polyimide thermoplastic resin, such as a Ultem resin, which is commercially available from Saudi Basic Industries Corporation Innovative Plastics of Riyhadh, Saudi Arabia.

The body **1502** includes a bone-contacting or bone-facing surface **1512** and an outer surface **1514** opposite the bone-facing surface **1512**. The outer surface **1514** includes a depression or recessed area **1516**, which provides an indication to a surgeon where to apply pressure to the body **1502** when coupling the cutting block **1500** to the patient's tibia. Additionally, a number of guide pin holes or passageways **1518** are defined through the body **1502** and have a diameter sized to receive respective guide pins to secure the block **1500** to the patient's tibia. In some embodiments, one or more of the guide pin holes **1518** may be oblique or otherwise angled with respect to the remaining guide pin holes **1518** to further secure the block **1500** to the patient's bone.

The body **1502** includes a modular cutting guide **1520**. That is, the body **1502** includes a cutting guide receiver slot **1522** in which the cutting guide **1520** is received. A latch **1524** or other locking device secures the cutting guide **1520** in place in the cutting guide receiver slot **1522**. As such, one of a number of different cutting guides **1520** having a cutting guide slot **1526** defined in various offset positions may be coupled to the body **1502** to allow a surgeon to selectively determine the amount of bone of the patient's bone is removed during the bone cutting procedure. For example, a cutting guide **1520** having a cutting guide slot **1526** offset by +2 millimeters, with respect to a neutral reference cutting guide **1520**, may be used if the surgeon desires to remove a greater amount of the patient's bone. The cutting guide **1520** may be formed from the same material as the body **1502** or from a different material. In one particular embodiment, the cutting guide **1520** is formed form a metallic material such as stainless steel.

The bone-facing surface **1512** of the body **1502** includes a negative contour **1528** configured to receive a portion of the anterior side of the patient's tibia having a corresponding contour. As discussed above, the customized patient-specific negative contour **1528** of the bone-contacting surface **1512** allows the positioning of the cutting block **1500** on the patient's tibia in a unique pre-determined location and orientation.

As discussed above, the arms or tabs **1504**, **1506** extend posteriorly from the body **1502** to define a U-shaped opening **1505** therebetween. The tabs **1504**, **1506** may extend from the body **1502** the same distance or a different distance. For example, as shown in FIG. **62**, the tab **1504** extends from the body **1502** a distance **1530** and the tab **1506** extends from the body **1502** a distance **1532**, which is greater than the distance **1530**. The tabs **1504**, **1506** taper in the anterior-posterior direction. That is, the thickness of the tabs **1504**, **1506** at an anterior end of the tabs **1504**, **1506** is greater than the thickness of the tabs **1504**, **1506** at a respective posterior end **1507**, **1509**. The tapering of the tabs **1504**, **1506** allow the tabs **1504**, **1506** to be inserted within the joint gap defined between the patient's femur and tibia.

The tabs **1504**, **1506** include a bone-contacting or bone-facing surface **1540**, **1542**, respectively, and an outer surface **1544**, **1546**, respectively, opposite the bone-facing surface **1540**, **1542**. The bone-facing surface **1540** of the tab **1504** includes a negative contour **1548** configured to receive a portion of the distal side of the patient's tibia having a respective corresponding contour. Similarly, the bone-facing surface **1542** of the tab **1506** includes a negative contour **1550** configured to receive a portion of the distal side of the patient's tibia having a respective corresponding contour.

In some embodiments, the negative contours **1528**, **1548**, **1550** of the bone-contacting surfaces **1512**, **1540**, **1542** of the cutting block **1500** may or may not match the corresponding contour surface of the patient's bone. That is, as discussed above, the negative contours **1528**, **1548**, **1550** may be scaled or otherwise resized (e.g., enlarged) to compensate for the patient's cartilage or lack thereof.

In use, the tibial cutting block **1500** is coupled to the proximal end of the patient's tibia. Again, because the bone-contacting surfaces **1512**, **1540**, **1542** of the cutting block **1500** include the negative contours **1528**, **1548**, **1550**, the block **1500** may be coupled to the patient's tibia in a pre-planned, unique position. When so coupled, the tabs **1504**, **1506** wrap around the proximal end of the patient's tibia. Additionally, when the block **1500** is coupled to the patient's femur, a portion of the anterior side of the tibia is received in the negative contour **1528** of the body **1502** and a portion of the proximal side of the patient's tibia is received in the negative contours **1548**, **1550** of the tabs

1504, 1506. As such, the anterior and proximal surfaces of the patient tibia are referenced by the tibial cutting block 1500.

Referring now to FIGS. 64-66, in another embodiment, the customized patient-specific orthopaedic surgical instrument may be embodied as a tibial cutting block 1600. The cutting block 1600 is configured to be coupled to a tibia of a patient similar to the cutting block 1500 described above. The cutting block 1600 includes a body 1602 configured to be coupled to the anterior side of the patient's tibia and two arms or tabs 1604, 1606, which extend away from the body 1602 in a posteriorly direction. The tabs 1604, 1606 are configured to wrap around a proximal end of the tibia as discussed in more detail below. Similar to the cutting block 1500, the cutting block 1600 may be formed from any suitable material. For example, the cutting block 1600 may be formed from a plastic or resin material. In one particular embodiment, the cutting block 1600 is formed from Vero resin using a rapid prototype fabrication process. However, the cutting block 1600 may be formed from other materials in other embodiments. For example, in another particular embodiment, the cutting block 1600 is formed from a polyimide thermoplastic resin, such as a Ultem resin, which is commercially available from Saudi Basic Industries Corporation Innovative Plastics of Riyhadh, Saudi Arabia.

The body 1602 includes a bone-contacting or bone-facing surface 1612 and an outer surface 1614 opposite the bone-facing surface 1612. The outer surface 1614 includes a number of guide holes or passageways 1616 defined therethrough. A guide pin bushing 1618 is received in each guide hole 1616. The guide pin bushings 1618 include an internal passageway 1620 sized to receive a respective guide pin to secure the block 1600 to the patient's tibia. As shown in FIG. 66, the guide passageways 1616 extends from the outer surface 1614 to the bone-facing surface 1612 and is counterbored on the bone-facing surface 1612. That is, the passageway 1616 has an opening 1622 on the bone facing surface 1612 having a diameter greater than the diameter of an opening 1624 on the outer surface 1614

The cutting guide 1600 includes a cutting guide 1630 secured to the body 1602. In one particular embodiment, the cutting guide 1630 is overmolded to the body 1602. The cutting guide 1630 includes a cutting guide slot 1632. The cutting guide 1630 may be formed from the same material as the body 1602 or from a different material. In one particular embodiment, the cutting guide 1630 is formed from a metallic material such as stainless steel. The body 1602 also includes a window or opening 1634 to allow a surgeon to visualize the positioning of the block 1600 on the patient's tibia by viewing portions of the tibia through the opening 1634. In the illustrative embodiment, the window 1634 is embodied as a notch 1636 defined on a superior end surface 1637 of the body 1602 of the cutting guide 1600. However, in other embodiments, the cutting block 1600 may include windows or openings formed in the body 1602 having other shapes and sizes.

The bone-facing surface 1612 of the body 1602 includes a negative contour 1638 configured to receive a portion of the anterior side of the patient's tibia having a corresponding contour and a portion of the medial side of the patient's tibia. That is, the negative contour 1638 is selected such that cutting block 1600 is configured to be coupled to the patient's tibia on an anterior-medial side. For example, as illustrated in FIG. 65, when the cutting block 1600 is secured to a patient's tibia, an angle 1639 is defined between a vertically-extending, bisecting plane 1641 of the body 1602 of the block 1600 and a bisecting sagittal plane 1643 of the patient's tibia. The magnitude of the angle 1639 may be selected based on, for example, the gender or age of the patient. In one particular embodiment, the angle is in the range of about 10 degrees to about 30 degrees. In another particular embodiment, the angle is about 20 degrees. As discussed above, the customized patient-specific negative contour 1638 of the bone-contacting surface 1612 allows the positioning of the cutting block 1600 on the patient's tibia in a unique pre-determined location and orientation.

The tabs 1604, 1606 include a bone-contacting or bone-facing surface 1640, 1642, respectively, and an outer surface 1644, 1646, respectively, opposite the bone-facing surface 1640, 1642. The bone-facing surface 1640 of the tab 1604 includes a negative contour 1648 configured to receive a portion of the proximal side of the patient's tibia having a respective corresponding contour. Similarly, the bone-facing surface 1642 of the tab 1606 includes a negative contour 1650 configured to receive a portion of the proximal side of the patient's tibia having a respective corresponding contour.

As discussed above, the arms or tabs 1604, 1606 extend posteriorly from the body 1600 to define a U-shaped opening 1605 therebetween. The tabs 1604, 1606 may extend from the body 1600 the same distance or a different distance. For example, as shown in FIG. 65, the tab 1604 extends from the body 1600 a distance 1652 and the tab 1606 extends from the body 1600 a distance 1654, which is greater than the distance 1652. Each of the tabs 1604, 1606 includes a respective elongated opening or window 1660 defined therethrough. Similar to the window 1634 described above, the windows 1660 allow a surgeon to visualize the positioning of the block 1600 on the patient's tibia by viewing portions of the proximal end tibia through the opening 1660.

In some embodiments, the negative contours 1638, 1648, 1650 of the bone-contacting surfaces 1612, 1640, 1642 of the cutting block 1400 may or may not match the corresponding contour surface of the patient's bone. That is, as discussed above, the negative contours 1638, 1648, 1650 may be scaled or otherwise resized (e.g., enlarged) to compensate for the patient's cartilage or lack thereof.

In use, the tibial cutting block 1600 is coupled to the proximal end of the patient's tibia. Again, because the bone-contacting surfaces 1612, 1640, 1642 of the cutting block 1600 include the negative contours 1638, 1648, 1650, the block 1600 may be coupled to the patient's tibia in a pre-planned, unique position. When so coupled, the tabs 1604, 1606 wrap around the proximal end of the patient's tibia. Additionally, when the block 1600 is coupled to the patient's tibia, a portion of the anterior side of the tibia is received in the negative contour 1638 of the body 1602 and a portion of the proximal side of the patient's tibia is received in the negative contours 1648, 1650 of the tabs 1604, 1606.

Referring now to FIG. 67, in one embodiment, the customized patient-specific orthopaedic surgical instrument may be embodied as a drill guide instrument 2050. The drill guide instrument 2050 includes a body 2052 having a bone-contacting or bone-facing surface 2054 and an outer surface 2056. The bone-contacting surface 2054 includes a negative contour 2058 configured to receive a portion of the patient's bone having a corresponding contour. As discussed above, the negative contour 2058 allows the positioning of the drill guide instrument 2050 on the patient's bone in a unique pre-determined location and orientation. Illustratively, the drill guide instrument 2050 is configured for use with the femur of a patient, but in other embodiments, the drill guide instrument 2050 may be configured for use with

other bones of the patient such as the tibia. The body **2052** of the drill guide instrument **2050** includes a number of drill guides **2060**, **2062**, each having a drill guide passageway **2066** defined therethrough. Illustratively, the drill guides **2060** and corresponding drill guide passageways **2066** are positioned on the body **2052** of the instrument **2050** to facilitate the positioning of guide pins for a patient-universal distal femur cutting block while the drill guide **2062** and corresponding drill guide passageways **2066** are positioned on the body **2052** to facilitate the positioning of guide pins for a patient-universal 4-in-1 femur cutting block. However, in other embodiments, the drill guide instrument **2050** may have a greater or lesser number of drill guide positioned in other locations on the body **2052**.

In use, the illustrative drill guide instrument **2050** is configured to be coupled to the distal end of a femur **2070** of a patient as illustrated in FIG. **68**. Again, because the drill guide instrument **2050** includes the negative contour **2058**, the drill guide instrument **2050** may be coupled to the femur **2070** in a pre-planned, unique position such that the drill guides **2060**, **2062** are positioned in a desired location relative to the femur **2070**. As such, because the positioning of the drill guide instrument **2050** has been predefined based on the negative contour **2058**, an orthopaedic surgeon may couple the drill guide instrument **2050** to the femur **2070** without the need of estimating the correct location.

After the drill guide instrument **2050** is coupled to the distal end of the femur **2070**, the orthopaedic surgeon may use the drill guides **2060**, **2062** to drill a number of holes or passageways **2068** in the femur **2070**. After the passageways **2068** have been drilled into the femur **2070**, a number of guide pins **2072** may be inserted or threaded into the passageways **2068**. The drill guide instrument **2050** may be left in place during the insertion of the guide pins **2072** or may be removed prior thereto. The guide pins **2072** are inserted into the femur **2070** such that a portion of each pin **2072** extends outwardly from the femur **2070**.

After the guide pins **2072** have been inserted into the femur **2070**, a number patient-universal or standard bone cutting blocks may be coupled to the femur **2070** using the guide pins **2072**. For example, as illustrated in FIG. **69**, a patient-universal distal cutting block **2074** and a patient-universal 4-in-1 femur-cutting block **2076** may be coupled to the femur **2070**. Each of the blocks **2074**, **2076** include a guide pin passageway **2075** configured to receive the portion of the corresponding guide pin that extends outwardly from the femur **2070**. Additionally, each of the blocks **2074**, **2076** include one or more cutting guides. For example, the block **2074** includes a captured cutting guide **2078**. The block **2076** includes a pair of angled, captured cutting guides **2080**, **2082**. In addition, the block **2076** includes a pair of non-captured cutting guides **2084**, **2086**, which define the ends of the block **2076**. In use, each of the cutting guides **2078**, **2080**, **2082**, **2084**, **2086** may be used to guide a bone saw blade or other cutting device. To do so, the bone saw blade may be inserted into the captured guides **2078**, **2080**, **2082** or abutted against the non-captured guides **2084**, **2086** to facilitate the cutting of the femur **2070**. It should be appreciated that because the position of the guide pins **2072** are pre-determined due to the configuration of the drill guide instrument **2050**, any bone cuts made using the patient-universal cutting blocks **2074**, **2076** correspond to the pre-determined bone cutting planes (see process step **24** of algorithm **10** described above in regard to FIG. **1**).

Referring now to FIGS. **70** and **71**, in another embodiment, the customized patient-specific orthopaedic surgical instrument may be embodied as a pair of bone-cutting blocks **2102**, **2104**. The bone-cutting block **2102** is a femoral cutting block and is configured to be coupled to a femur **2106** of the patient. The bone-cutting block **2104** is a tibial cutting block and is configured to be coupled to a tibia **2108** of the patient. The bone-cutting block **2102** includes a bone-contacting or bone-facing surface **2110** having a negative contour (not shown) matching a portion of the contour of the femur **2106**. Similarly, the bone-cutting block **2104** includes a bone-contacting or bone-facing surface **2112** having a negative contour (not shown) matching a portion of the contour of the tibia **2108**. As discussed above, the negative contours of the blocks **2102**, **2104** allow the positioning of the patient-specific cutting blocks **2102**, **2104** on the patient's respective bone in a unique pre-determined location and orientation.

The femoral cutting block **2102** includes a pair of pin guides **2114**. In use, the pin guides **2114** are used as drill guides to establish guide pin holes in the femur **2106**. The cutting block **2102** also includes a cutting guide **2116**. Illustratively, the cutting guide **2116** is a captured cutting guide, but may be embodied as a non-captured or open cutting guide in other embodiments. Similarly, the tibial cutting block **2104** includes a pair of pin guides **2118** and a cutting guide **2120**. As discussed above, the cutting guides **2116**, **2120** are used to guide a bone saw blade or other cutting device.

In some embodiments, the bone-contacting surface **2110** of the bone-cutting block **2102** may also include a thumb or pressure recess **2111**, which is positioned on the block **2102** to correspond to a fossa of the patient's bone **2106**. In use, the thumb recess **2111** may be used by the surgeon to properly seat the cutting block **2102** on the patient's bone **2106**

In use, the cutting blocks **2102**, **2104** are configured to be coupled to patient's femur **2106** and tibia **2108**, respectively. Again, because each of the blocks **2102**, **2104** include the respective negative contours, the blocks **2102**, **2104** may be coupled to the respective bone **2106**, **2108** in a pre-planned, unique position such that the pin guides **2114**, **2118** and cutting guides **2116**, **2120** are positioned in a desired location relative to the respective bone **2106**, **2108**. After the blocks **2102**, **2104** have been coupled to the respective bone **2106**, **2108**, the orthopaedic surgeon may drill guide pin holes into the bones **2106**, **2108** using the pin guides **2114**, **2118** as drill guides. Guide pins **2122** may then be inserted into each pin guide **2114**, **2118** to secure the corresponding patient-specific cutting block **2102**, **2104** to the respective bone **2106**, **2108**. After the cutting blocks **2102**, **2104** have been secured to the femur **2106** and tibia **2108** of the patient, the orthopaedic surgeon may resect the femur **2106** and the tibia **2108** using the cutting guides **2116**, **2120** with a bone saw or other cutting device. To do so, the surgeon may insert a bone saw blade of the bone saw into the cutting guide **2116**, **2120**. It should be appreciated that because the position of the cutting guides **2116**, **2120** are pre-determined due to the configuration of the respective bone cutting blocks **2102**, **2104**, any bone cuts made using the patient-specific cutting blocks **2102**, **2104** correspond to the predetermined bone cutting planes (see process step **24** of algorithm **10** described above in regard to FIG. **1**).

In some instances, the orthopaedic surgeon may determine that additional bone must be removed from the femur and/or tibia subsequent to the first resection using the patient-specific cutting blocks **2102**, **2104**. In such cases, the orthopaedic surgeon may use a pair of patient-universal re-cut blocks **2132**, **2134** as shown in FIG. **71**. The patient-universal recut blocks **2132**, **2134** may be coupled to the

femur **2106** and the tibia **2108** of the patient, respectively, using the guide pins **2122**. That is, the location of the pin guides **2114**, **2118** on the respective patient-specific cutting blocks **2102**, **2104** is selected such that the guide pins **2122**, once inserted into the patient's bone, may be used with patient-universal or standard re-cut blocks. As such, new guide pins for the re-cut blocks **2132**, **2134** are not needed. Each of the re-cut blocks **2132**, **2134** include a grouping of guide pin holes **2136** configured to receive the guide pins **2122**. Illustratively, each grouping of the guide pin holes **2136** includes a neutral guide pin hole **2138**, a plus two millimeter guide pin hole **2140**, and a minus two millimeter guide pin hole **2142**. However, guide pin holes corresponding to other resection amounts may be used in other embodiments. Additionally, as illustrated in FIG. **71**, the guide pin holes **2136** include pairings of holes that may be used to adjust the angle of the resection cut. Each of the re-cut blocks **2132**, **2134** also include a captured cutting guide **2144**, **2146**. However, in other embodiments, the re-cut blocks **2132**, **2134** may include non-captured or open cutting guides in addition to or in place of the guides **2144**, **2146**.

Referring now to FIG. **72**, in one embodiment, a patient-universal re-cut instrument **2150** includes a base **2152** and a cutting block **2154** removably coupled to the base **2152**. The base **2152** includes a substantially planar bone-contacting or bone-facing surface **2156** and an outer surface **2158**. A handle **2160** extends outwardly from the outer surface **2158** to facilitate the positioning of the instrument **2150**. The bone-contacting surface **2156** is configured to contact the resected surface **2162** of a bone **2164** of the patient as illustrated in FIG. **72**.

The cutting block **2154** is secured to an end **2166** of the base **2152** via a securing device **2168** such as a bolt, thumbscrew, or other securing device capable of removably coupling the block **2154** to the base **2152**. The cutting block **2154** includes a captured cutting guide **2172**, but may also include a non-captured cutting guide **2174** in some embodiments. In such embodiments, the non-captured cutting guide **2174** may define an end side of the cutting block **2154**. The cutting guide **2172** may be defined in the cutting block **2154** such that any amount of bone may be resected. For example, in one illustrative embodiment, the cutting guide **2172** is defined in the cutting block **2154** such that two millimeters of bone is removed during each resectioning of the bone **2164**. In other embodiments, the cutting block **2154** may be configured to remove other amounts of bone. In addition, because the cutting block **2154** is removable from the base **2152**, cutting blocks having cutting guides configured to facilitate the removal of various amounts of bone may be selectively coupled to the base **2152**. As such, a selection of cutting blocks configured to remove various amounts of bone during resectioning may be used with a single base **2152**.

Referring now to FIGS. **73-76**, in another embodiment, a patient-universal re-cut instrument or block **2200** includes a planar bone-contacting or bone-facing surface **2202**, a lower outer surface **2204**, and an upper outer surface **2206**. The bone-contacting surface **2202** is configured to contact the resected surface **2216** of a bone **2212** of the patient as illustrated in FIGS. **75** and **76**. Illustratively, the re-cut block **2200** is configured for use with a femur of the patient, but may be configured for use with the tibia or other bone of the patient in other embodiments. The illustrative re-cut instrument **2200** has a substantially "L"-shape, but may have other shapes in other embodiments configured to be coupled to the end of a resected bone.

The re-cut instrument **2200** includes a captured cutting guide **2208** defined in the upper outer surface **2206**, but may also include a non-captured cutting guide **2209** in some embodiments. In such embodiments, the non-captured cutting guide **2209** may define an end side of the re-cut block **2200**. The cutting guide **2208** may be defined in the re-cut block **2200** such that any amount of bone may be resected. For example, in one illustrative embodiment, the cutting guide **2208** is defined in the re-cut block **2200** such that two millimeters of bone is removed during each resectioning of the bone **2212**. In other embodiments, the re-cut block **2200** may be configured to remove other amounts of bone.

The re-cut instrument **2200** also includes a number of guide pin holes **2210** as illustrated in FIG. **74**. The guide pin holes **2210** are defined in the lower outer surface **2204** of the instrument **2200** such that the instrument **2200** may be coupled to the bone **2212** of the patient in a neutral or angled position. That is, as illustrated in FIGS. **75** and **76**, the re-cut block **2200** is configured to be coupled to the bone **2212** of the patient using the guide pins **2220**, which were secured to the bone **2212** of the patient using a customized patient-specific orthopaedic surgical instrument such as one of the bone-cutting blocks **2102**, **2104** described above in regard to FIGS. **70** and **71**.

After the initial cut of the bone has been made using the customized patient orthopaedic surgical instrument, the re-cut instrument **2200** may be coupled to the bone **2212** using the guide pins **2220**. As discussed above, the re-cut block **2200** may be coupled to the bone **2212** in a neutral orientation or in an angled orientation to facilitate straight or angled cuts, respectively. For example, if an angled cut is desired, the re-cut instrument **2200** may be coupled to the bone **2212** such that the guide pins **2220** are received in guide pin holes **2222**, **2224**, which are offset relative to each other (see FIG. **74**). As such, the cutting guide **2208** is oriented in an angled position relative to the bone **2212** of the patient. In some embodiments as illustrated in FIG. **76**, the cutting guide **2208** may be defined in the re-cut instrument at an angle to provide additional angulation to the bone cut. In use, an orthopedic surgeon may be supplied with a variety of re-cut blocks **2200**, each configured to remove different amounts of bone and/or cut the bone at various angles. For example, the re-cut blocks **2200** may be shipped to the orthopaedic surgeon along with the customized patient-specific orthopaedic surgical instrument as discussed above in regard to process steps **30**, **32** of algorithm **10**.

Referring now to FIGS. **77-80**, in one embodiment, an orthopaedic surgical tool usable with various customized patient-specific orthopaedic surgical instruments is embodied as a bone saw tool **2300**. The bone saw tool **2300** includes a bone saw **2302** and a bone saw blade **2304**. The bone saw **2300** includes a housing **2306** having a bone saw chuck **2308** configured to receive the bone saw blade **2304** positioned on one end of the housing **2306**. A handle **2316** extends downwardly from the housing **2306**. A user may couple the bone saw blade **2304** to the bone saw **2302** by inserting the bone saw blade **2304** into the chuck **2308** and operating the chuck **2308** to secure the bone saw blade **2304** to the bone saw **2302**. In use, the illustrative bone saw blade chuck **2308** moves the saw blade **2304** in a cutting motion. For example, in some embodiments, the bone saw blade chuck **2308** oscillates the bone saw blade **2304** along a cutting arc **2309**. However, in other embodiments, the bone saw blade **2304** may be oscillated or otherwise moved in any direction and along any cutting path depending on the particular application and type of bone saw used.

The bone saw **2302** also includes a guide **2310** coupled to the bottom of the housing **2306**. The guide **2310** is configured as a body having one or more holes to receive one or more guide pins **2312** that have been coupled to a bone **2314** of a patient. In the illustrative embodiment described herein, the guide **2310** is embodied as an elongated body having a slot defined therein for receiving the guide pins **2312**. The guide pins **2312** may be coupled to the bone **2314** using a customized patient-specific orthopaedic surgical instrument such as the drill guide instrument **2050** illustrated in and described above in regard to FIGS. **67-69**. As such, the guide pins **2312** are coupled to the bone **2314** in a pre-determined position due to the configuration of the customized patient-specific orthopaedic surgical instrument such that any bone cuts made with the bone saw **2302** correspond to the predetermined bone cutting planes (see process step **24** of algorithm **10** described above in regard to FIG. **1**).

As discussed above, the guide **2310** is configured to receive the guide pins **2312**. The guide **2310** is elongated and oriented orthogonally with respect to the guide pins **2312** such that the pins **2312** may be received in the guide **2310**. In use, the bone saw **2302** may be moved in a medial-lateral direction with respect to the patient's bone **2314** until one of the guide pins **2312** contacts an inner side wall of the guide **2310**.

In other embodiments, the guide **2310** may be secured to the bone saw **2302** via use of other devices. For example, as illustrated in FIG. **78**, the housing **2306** of the bone saw **2302** may include a shaft **2320** in some embodiments. In such embodiments, the guide **2310** may be secured to the shaft **2320** via a clamp **2322**. The guide **2310** may be removably coupled to the shaft **2320** in some embodiments. For example, the clamp **2322** may include a securing device such as a bolt **2324**, which may be removed to release or remove the guide **2310** from the bone saw **2302**.

As shown in FIGS. **78** and **79**, the guide pins **2312** are received in the guide **2310** in use. In some embodiments, the guide **2310** may be configured to swivel or turn with respect to the bone saw **2302**. That is, the guide **2310** may be coupled to the clamp **2322** via a swiveling post **2326**. As such, during use, the bone saw **2302** may be moved in a medial-lateral direction and swivel with respect to the guide pins **2312**.

In some embodiments, the distance **2333** at which the guide pins **2312** extend from the bone **2312** may vary. For example, in some embodiments, the guide pins **2312** may extend from the bone **2314** a short distance. In such embodiments, the guide **2310** of the bone saw **2302** may be configured to move inwardly and outwardly with respect to the bone saw **2302** to accommodate guide pins **2312** of various lengths. For example, as illustrated in FIG. **80**, the guide **2310** may be coupled to a base **2336**, which is coupled to the clamp **2322** via a rod **2330**. The rod **2330** extends through a spring **2332** positioned between the base of the guide **2310** and the clamp **2324**. The spring **2332** biases the rod **2330** in an extended position relative to the clamp **2324**. However, if the guide pins **2312** extend from the bone **2314** a short distance **2333**, the guide **2310** may be pressed against the side of the bone **2314** during use to cause the spring **2332** to be compressed to a length **2334**. In response to compression of the spring, the guide **2310** is retracted inwardly with respect to the bone saw **2302**. In some embodiments, the guide **2310** may be coupled to the base **2336** via a swiveling post **2326**. In such embodiments the guide **2310** is configured to swivel or turn with respect to the bone saw **2302**.

Referring now to FIG. **81**, in one embodiment, the customized patient-specific orthopaedic surgical instrument may be embodied as a cutting block **3100**. The cutting block **3100** is configured to be coupled to a bone, such as femur or tibia, of a patient. The cutting block **3100** includes a body **3102** having a bone-contacting or bone-facing surface **3104** and an outer surface **3106**. The bone-contacting surface **3104** includes a negative contour **3108** configured to receive a portion of the patient's bone having a corresponding contour. As discussed above, the negative contour **3108** of the bone-contacting surface **3104** allows the positioning of the cutting block **3100** on the patient's bone in a unique pre-determined location and orientation.

The cutting block **3100** also includes a number of pin guides **3110**. In use, the pin guides **3110** are used as drill guides to establish guide pin holes in the bone of the patient for securing a number of guide pins (not shown) to the bone. The cutting block **3100** may then be coupled and secured to the patient's bone via the guide pins.

The cutting block **3100** also includes a first cutting guide **3112**, a second cutting guide **3114**, and a third cutting guide **3116**. Each of the cutting guides **3112**, **3114**, **3116** are spaced apart from each other a predetermined distance. For example, in one particular embodiment, each of the cutting guides **3112**, **3114**, **3116** are spaced apart a distance of about two millimeters, but may be spaced apart from each other distances in other embodiments. In some embodiments, the second cutting guide **3114** is embodied as the neutral or zero offset cutting guide. That is, because the position of the cutting guide **3114** is pre-determined due to the configuration of the cutting block **3100**, any bone cuts made using the patient-specific cutting block **3100** correspond to the predetermined bone cutting planes (see process step **24** of algorithm **10** described above in regard to FIG. **1**). As such, the cutting guide **3112** is spaced apart from the cutting guide **3114** and usable to remove a greater amount of the patient's bone (e.g., two millimeters more) relative to the cutting guide **3114**. Similarly, the cutting guide **3116** is spaced apart from the cutting guide **3114** and usable by the surgeon to remove a lesser amount of the patient's bone (e.g., two millimeters less) relative to the cutting guide **3114**.

In use, the cutting block **3100** is configured to be coupled to a patient's bone **3120**, such as the femur or tibia as illustrated in FIG. **82**. Again, because the bone-contacting surface **3104** of the cutting block **3100** includes the negative contour **3108**, the block **3100** may be coupled to the bone **3120** in a pre-planned, unique position. The cutting block **3100** may be secured to the bone **3120** via use of a number of guide pins (not shown) received in the pin guides **3110** and the bone **3120**. In some embodiments, the cutting block **3100** may include a mechanical alignment line or indicator **3122** and/or an anatomical alignment line or indicator **3124**.

After the cutting block **3100** has been secured to the patient's bone **3120**, the orthopaedic surgeon may perform the bone resectioning. As discussed above, the surgeon may use the cutting guide **3114** to resect the pre-planned amount of bone. That is, the bone cut made using the cutting guide **3114** corresponds to the cutting plane determined during the fabrication of the cutting block **3100** (see process step **24** of algorithm **10** described above in regard to FIG. **1**). However, the orthopaedic surgeon may make an intra-operative decision based on analysis of the bony anatomy of the patient and/or soft tissue complex to remove more or less of the patient's bone with respect to the pre-planned amount (i.e., the amount removed if the surgeon uses the cutting guide **3114**). For example, the orthopaedic surgeon may use the cutting guide **3112** to remove more of the patient's bone or the cutting guide **3116** to remove less of the patient's bone.

As such, it should appreciated that the cutting block **3100** provides an amount of intra-operative adjustability to the orthopaedic surgeon.

Referring now to FIG. **83**, in some embodiments, the cutting block **3100** may include a breakaway tab **3122** covering the cutting guide **3112** and a breakaway tab **3124** covering the cutting guide **3116**. The breakaway tabs **3122**, **3124** may be formed from a transparent material in some embodiments. The orthopaedic surgeon may estimate the amount of bone that will be removed when using each cutting guide **3112**, **3116** by looking through the transparent breakaway tabs **3122**, **3124**. In use, if the surgeon decides to use one of the cutting guides **3112**, **3116**, the surgeon may remove the respective breakaway tab **3122**, **3124** and resect the patient's bone **3120** using the corresponding cutting guide **3112**, **3116**.

Referring now to FIGS. **84-86**, in one embodiment, the customized patient-specific orthopaedic surgical instrument may be embodied as a cutting block **3150**. The cutting block **3150** is configured to be coupled to a bone, such as femur or tibia, of a patient. The cutting block **3150** includes a body **3152** having a bone-contacting or bone-facing surface **3154** and an outer surface **3156**. The bone-contacting surface **3154** includes a negative contour **3158** configured to receive a portion of the patient's bone having a corresponding contour. As discussed above, the negative contour **3158** of the bone-contacting surface **3154** allows the positioning of the cutting block **3150** on the patient's bone in a unique, pre-determined location and orientation. In some embodiments, the cutting block **3150** may also include an anterior resection line or indicator **3180** and/or a posterior resection line **3182**.

The cutting block **3150** also includes a number of pin guides **3160**. In use, the pin guides **3160** are used as drill guides to establish guide pin holes in the bone of the patient for securing a number of guide pins (not shown) to the bone. The cutting block **3150** may then be coupled and secured to the patient's bone via the guide pins.

The cutting block **3150** also includes an aperture **3162** defined in the outer surface **3156** of the body **3152**. The aperture **3162** is configured to receive one of a number of cutting guide inserts **3164**, **3166**, **3168**. The illustrative aperture **3162** is rectangular in shape, but may have other shapes in other embodiments configured to receive the inserts **3164**, **3166**, **3168**. The cutting guide inserts **3164**, **3166**, **3168** are similarly configured to be received in the aperture **3162**. As such, the illustrative inserts **3164**, **3166**, **3168** are embodied as rectangular blocks, but may have other configurations in other embodiments.

Each of the inserts **3164**, **3166**, **3168** includes a cutting guide **3174**, **3176**, **3178**, respectively, defined therethrough. The cutting guides **3174**, **3176**, **3178** are defined in a different location in each of the inserts **3164**, **3166**, **3168** with respect to each other. For examples, as shown in FIG. **84**, the cutting guide **3174** of the cutting guide insert **3164** is located in a neutral, central, or non-offset position relative to the insert **3164**. However, the cutting guide **3176** of the cutting guide insert **3166** is offset from the center of the cutting guide insert **3166**. Additionally, the cutting guide **3178** of the cutting guide insert **3168** is offset from the center of the cutting guide insert **3168** an amount greater than the cutting guide **3176** of the insert **3166**. The cutting guides **3176**, **3178** may be offset by any amount. In one particular embodiment, the cutting guide **3176** is offset from the center of the cutting guide insert **3166** by about two millimeters and the cutting guide **3178** is offset from the center of the cutting guide insert **3168** by about four millimeters. Additionally, any number of cutting guide inserts having a variety of offset cutting guides may be used in other embodiments.

In use, the cutting block **3150** is configured to be coupled to a patient's bone **3170**, such as the femur or tibia. Again, because the bone-contacting surface **3154** of the cutting block **3150** includes negative contour **3158**, the block **3150** may be coupled to the bone **3170** in a pre-planned, unique position. The cutting block **3150** may be secured to the bone **3170** via use of a number of guide pins (not shown) received in the pin guides **3160** and the bone **3170**. Any one of the cutting guide inserts **3164**, **3166**, **3168** may be inserted into the aperture **3162** of the cutting block **3150**. For example, the cutting guide insert **3164** having a non-offset cutting guide **3174** may be inserted into the aperture **3162** to resect the pre-planned amount of bone. That is, the bone cut made using the cutting guide **3164** corresponds to the cutting plane determined during the fabrication of the cutting block **3150** (see process step **24** of algorithm **10** described above in regard to FIG. **1**).

However, the orthopaedic surgeon may make an intra-operative decision based on analysis of the bony anatomy of the patient and/or soft tissue complex to remove more or less of the patient's bone with respect to the pre-planned amount (i.e., the amount removed if the surgeon uses the cutting guide insert **3164**). For example, the orthopaedic surgeon may use the cutting guide insert **3166** to remove more (or less) of the patient's bone or the cutting guide insert **3168** to remove even more (or even less) of the patient's bone.

Each cutting guide insert **3166**, **3168** having an offset cutting guide **3176**, **3178** may be inserted into the aperture **3162** in one of two configurations such that the cutting guide insert **3166**, **3168** is configured to remove more or less of the patient's bone **3170** relative to the non-offset cutting guide insert **3164**. For example, as illustrated in FIG. **85**, the cutting guide insert **3168** may be inserted into the aperture **3162** in a first orientation such that any bone resectioning performed using the cutting block **3150** will remove more bone (e.g., about four millimeters more) relative to the non-offset cutting guide insert **3164**. Alternatively, as illustrated in FIG. **86**, the cutting guide insert **3168** may be removed from the aperture **3162** and re-inserted in a second orientation such that any bone resectioning performed using the cutting block will remove less bone (e.g., about four millimeters less) relative to the non-offset cutting guide insert **3164**. Accordingly, the orthopaedic surgeon may resect up to about four millimeters less or more bone relative to the non-offset cutting guide insert **3164** in some embodiments. As such, it should be appreciated that the cutting block **3150** provides an amount of intra-operative adjustability to the orthopaedic surgeon. In some embodiments, the orthopaedic surgeon may be provided with the cutting block **3150** and a selection of various cutting guide inserts to provide a wide range of adjustability.

Referring now to FIG. **87**, in one embodiment, the customized patient-specific orthopaedic surgical instrument may be embodied as a cutting block **3200**. The cutting block **3200** is configured to be coupled to a bone, such as femur or tibia, of a patient. The cutting block **3200** includes a body **3202** having a bone-contacting or bone-facing surface **3204** and an outer surface **3206**. The bone-contacting surface **3204** includes a negative contour (not shown) configured to receive a portion of the patient's bone having a corresponding contour. As discussed above, the negative contour of the bone-contacting surface **3204** allows the positioning of the cutting block **3200** on the patient's bone in a unique pre-determined location and orientation.

The cutting block **3200** also includes a number of pin guides **3210**. In use, the pin guides **3210** are used as drill guides to establish guide pin holes in the bone of the patient for securing a number of guide pins (not shown) to the bone. The cutting block **3200** may then be coupled and secured to the patient's bone via the guide pins.

The cutting block **3200** also includes an aperture **3212** defined in the outer surface **3206** of the body **3202**. An adjustable cutting guide **3214** is positioned in the aperture **3212**. The adjustable cutting guide **3214** is operably coupled to a thumbwheel, dial, or other positioning device **3216** via a mechanical linkage **3218**. In some embodiments, the cutting block **3200** may include indicia **3220** located toward the side of the aperture **3212** and configured to provide a visual indication of the position of the adjustable cutting guide **3214**.

In use, the cutting block **3200** is configured to be coupled to a patient's bone **3230**, such as the femur or tibia. Again, because the bone-contacting surface **3204** of the cutting block **3200** includes the negative contour, the block **3200** may be coupled to the bone **3230** in a pre-planned, unique position. The cutting block **3200** may be secured to the bone **3230** via use of a number of guide pins (not shown) received in the pin guides **3210** and the bone **3230**. After the cutting block **3200** has been secured to the patient's bone **3230**, the orthopaedic surgeon may resect the bone **3230**. The amount of resection may be adjusted by the surgeon intra-operatively via the thumbwheel **3216**. That is, the orthopaedic surgeon may adjust the position of the adjustable cutting guide **3214** in the aperture **3212**, as indicated by the direction arrow **3222**, by operating the thumbwheel **3216**. For example, the surgeon may adjust the cutting guide **3214** to remove more or less of the patient's bone **3230**. The surgeon may monitor the position of the cutting guide **3214** based on the indicia **3220**.

Referring now to FIG. **88**, in another embodiment, the customized patient-specific orthopaedic surgical instrument may be embodied as a cutting block **3250**. The cutting block **3250** is configured to be coupled to a bone, such as femur or tibia, of a patient. The cutting block **3250** includes a body **3252** having a bone-contacting or bone-facing surface **3254** and an outer surface **3256**. The bone-contacting surface **3254** includes a negative contour **3258** configured to receive a portion of the patient's bone having a corresponding contour. As discussed above, the negative contour **3258** of the bone-contacting surface **3254** allows the positioning of the cutting block **3250** on the patient's bone in a unique pre-determined location and orientation.

The cutting block **3250** also includes a number of pin guides **3260**. In use, the pin guides **3260** are used as drill guides to establish guide pin holes in the bone of the patient for securing a number of guide pins (not shown) to the bone. The cutting block **3250** may then be coupled and secured to the patient's bone via the guide pins. The cutting block **3250** also includes a cutting guide **3262**. Illustratively, the cutting guide **3262** is a captured cutting guide, but may be embodied as a non-captured or open cutting guide in other embodiments.

The cutting block **3250** also includes a pair of threaded apertures **3264** defined in an end wall of the body **3252**. A pair of threaded bolts **3266** are received in the apertures **3264**. The threaded bolts **3266** each include a handle **3268** usable to adjust the position of the respective bolt **3266** with respect to the body **3252** of the cutting block **3250**. That is, each bolt **3266** may be separately threaded into or out of the block **3250**. The threaded apertures **3264** extend through the block such that the ends of the bolts **3266** opposite the handles **3268** may contact the bone **3270** of the patient when threaded into the body **3252** a sufficient amount.

In use, the cutting block **3250** is configured to be coupled to a patient's bone **3270**, such as the femur or tibia. Again, because the bone-contacting surface **3254** of the cutting block **3250** includes the negative contour **3258**, the block **3250** may be coupled to the bone **3270** in a pre-planned, unique position. The cutting block **3250** may be secured to the bone **3270** via use of a number of guide pins (not shown) received in the pin guides **3260** and the bone **3270**. After the cutting block **3250** has been secured to the patient's bone **3270**, the orthopaedic surgeon may make an intra-operative decision based on analysis of the bony anatomy of the patient and/or soft tissue complex to adjust the position of the cutting block **3250** relative to the bone **3270**. To do so, the surgeon may operate one or both of the threaded bolts **3266** to move the block closer to or away from the end of the bone **3270** and/or change the angulation of the block **3250** relative to the bone **3270**. That is, the orthopaedic surgeon may thread in or out both bolts **3266** to move the block **3250** closer to or farther away from the bone **3270**, respectively. Additionally or alternatively, the orthopaedic surgeon may thread in or out only one of the bolts **3266** to alter the valgus/varus angulation of the cutting block **3250** relative to the patient's bone **3270**. As such, it should appreciated that the cutting block **3250** provides an amount of intra-operative adjustability to the orthopaedic surgeon. It should also be appreciated that in some embodiments other methods of adjustability may be used in addition to the bolts **3266** to provide the surgeon with even more intra-operative adjustability.

Referring now to FIG. **89**, in another embodiment, the customized patient-specific orthopaedic surgical instrument may be embodied as a cutting block **3300**. The cutting block **3300** is configured to be coupled to a femur **3314** of the patient to perform resectioning on a tibia **3316** of the patient. The cutting block **3300** includes a body **3302** having a bone-contacting or bone-facing surface **3304** and an outer surface **3306**. The bone-contacting surface **3304** includes a negative contour **3308** configured to receive a portion of the patient's femur **3314** having a corresponding contour. As discussed above, the negative contour **3308** of the bone-contacting surface **3304** allows the positioning of the cutting block **3300** on the patient's femur **3314** in a unique pre-determined location and orientation.

The cutting block **3300** also includes a number of pin guides **3310**. In use, the pin guides **3310** are used as drill guides to establish guide pin holes in the bone of the patient for securing a number of guide pins (not shown) to the bone. The cutting block **3300** may then be coupled and secured to the patient's bone via the guide pins.

The cutting block **3300** includes an extended distal wall **3320** that extends downwardly over the tibia **3316**. A tibial cutting guide **3312** is defined in the extended distal wall **3320**. Illustratively, the tibial cutting guide **3312** is a captured cutting guide, but may be embodied as a non-captured or open cutting guide in other embodiments. In use, the cutting block **3300** is configured to be coupled to a patient's femur **3314** to perform a cut on the patient's tibia **3316** while the patient's knee is in flexion. Again, because the bone-contacting surface **3304** of the cutting block **3300** includes the negative contour **3308**, the block **3300** may be coupled to the femur **3314** in a pre-planned, unique position. The cutting block **3300** may be secured to the femur **3314** via use of a number of guide pins (not shown) received in the pin guides **3310** and the femur **314**. Because the cutting block

3300 is secured to the femur 3314, the stability of the block 3300 while performing the tibial cuts may be improved.

Referring now to FIGS. 90-92, in another embodiment, a customized patient-specific orthopaedic surgical instrument 3400 includes a pair of paddles 3402, 3404. The paddles 3402, 3404 are substantially identical and include an elongated shaft 3406 and a bone plate 3408. The elongated shafts 3406 are operably coupled to a hub 3410. A handle 3412 is also secured to the hub 3410 to facilitate positioning of the orthopaedic surgical instrument 3400. In some embodiments, the hub 3410 includes mechanical linkage for independently or conjointly moving each paddle 3402, 3404 toward each other or away from each other as desired. For example, the hub 3410 may include a thumb dial usable to adjust the position of the paddles 3402, 3404. In another embodiment, the hub 3410 includes a biasing member, such as a spring, positioned between the paddles 3402, 3404. In such embodiments, the biasing member biases the paddles 3402, 3404 away from each other.

Each of the bone plates 3408 includes two curved arms 3414, 3416 that wrap inwardly toward each other to form a substantially "U"-shape. Each arm 3414, 3416 includes a condyle recess 3420 configured to receive a portion of the condyle of the femur or tibia of the patient. Additionally, each paddle 3402, 3404 of the orthopaedic surgical instrument 3400 includes a cutting guide 3422 secured to the respective bone plate 3408 via a bracket 3424. The cutting guides 3422 are pivotably coupled to the bracket 3424 via a pivot hinge 3426.

Each cutting guide 3422 is independently or conjointly adjustable relative to the respective bone plate 3408. That is, each cutting guide 3422 may be pivoted to one of a number of positions relative to the respective bracket 3424. In some embodiments, an adjustment tool 3430 may be used to simultaneously position each cutting guide 3422 as shown in FIG. 91. The adjustment tool 3430 includes an elongated handle 3434 and two guide bars 3432 extending outwardly from the handle 3434. The guide bars 3432 are sized and positioned relative to each other such that each guide bar 3432 is receivable in the guide slot of the respective cutting guide 3422. After the adjustment tool 3430 is so positioned, the tool 3430 may be used to adjust both cutting guides 3422 simultaneously by moving the tool 3430 up or down.

In some embodiments, the orthopaedic surgical instrument 3400 may be patient-universal. However, in other embodiments, the orthopaedic surgical instrument 3400 may be customized for a particular patient. In such embodiments, the orthopaedic surgical instrument 3400 may be customized to the particular patient based on the positioning of the condyle recesses 3416 on the bone plates 3408 and the positioning of the cutting guides 3422 (e.g., via the height of the bracket 3424).

In use, the orthopaedic surgical instrument 3400 is configured to be inserted between the patient's femur 3440 and tibia 3442 as illustrated in FIG. 92. The condyles of the patient's femur 3440 and the tibia 3442 are received in the condyle recesses 3420 of the respective bone plate 3408. After the instrument 3400 has been inserted between the bones 3440, 3442, the paddles 3402, 3404 may be adjusted. For example, the paddles 3402, 3404 may be moved toward or away from each other as required by the patient's joint and surrounding soft tissue. After the paddles 3402, 3404 have been positioned in the desired location, each of the cutting guides 3422 may be positioned. To do so, the orthopaedic surgeon may separately position each cutting guide 3422. Alternatively, the orthopaedic surgeon may use the adjustment tool 3430 to simultaneously position each cutting guide 3422. It should be appreciated that the proximal cutting guide 3422 may be used by the orthopedic surgeon to perform femur resectioning and the distal cutting guide 3422 may be used by the surgeon to perform tibia resectioning. As such, the orthopaedic surgical tool 3400 provides an amount of adjustability to the surgeon.

Referring now to FIG. 93, in another embodiment, the customized patient-specific orthopaedic surgical instrument 3500 includes a femoral cutting block 3502 and a tibial platform 3504. The femoral cutting block 3502 includes a bone-contacting or bone-facing surface 3506 and an outer surface 3508. The bone-contacting surface 3506 includes a negative contour 3510 configured to receive a portion of the patient's femur 3530 having a corresponding contour. As discussed above, the negative contour 3510 of the bone-contacting surface 3506 allows the positioning of the cutting block 3502 on the patient's femur 3530 in a unique pre-determined location and orientation.

The femoral cutting block 3502 also includes a number of pin guides 3512. In use, the pin guides 3512 are used as drill guides to establish guide pin holes in the femur 3530 of the patient for securing a number of guide pins (not shown) to the femur 3530. The cutting block 3502 may then be coupled and secured to the patient's femur 3530 via the guide pins. The cutting block 3502 also includes a cutting guide 3514. Illustratively, the cutting guide 3514 is a non-captured or open cutting guide, which is defined by an upper wall surface of the block 3502. However, in other embodiments, the cutting guide 3514 may be embodied as a closed cutting guide.

The tibial platform 3504 includes a bone-contacting or bone-facing surface 3516 and an upper surface 3518. In some embodiments, similar to the bone-contacting surface 3506 of the cutting block 3502, the bone-contacting surface 3516 includes a negative contour (not shown) configured to receive a portion of the patient's tibia 3532 having a corresponding contour. In such embodiments, as discussed above, the negative contour of the bone-contacting surface 3516 allows the positioning of the tibial platform 3504 on the patient's tibia 3532 in a unique pre-determined location and orientation. However, in other embodiments, the bone-contacting surface 3516 may be substantially planar and configured to be positioned on a resected tibia 3532 having a planar top surface.

The tibial platform 3504 is connected to the femoral cutting block 3502 via a rod 3520. As illustrated in FIG. 93, the rod 3520 extends away from the platform 3504 and the cutting block 3502 to provide additional room around the patient's knee joint for the orthopaedic surgeon.

Referring now to FIGS. 94 and 95, in another embodiment, the customized patient-specific orthopaedic surgical instrument may be embodied as a 5-in-1 cutting block 3550. The cutting block 3550 is configured to be coupled to a bone, such as femur or tibia, of a patient. The cutting block 3550 includes a generally L-shaped body 3552 having an anterior plate 3590 and a distal plate 3592. Both of the plates 3590, 3590 have a bone-contacting or bone-facing surface 3554 and an outer surface 3556. The bone-contacting surface 3554 includes a number of planar bottom or flat surfaces 3558 and a negative contour 3560 configured to receive a portion of the patient's bone having a corresponding contour. As discussed above, the negative contour 3560 of the bone-contacting surface 3554 allows the positioning of the cutting block 3550 on the patient's bone in a unique pre-determined location and orientation. In the case of the anterior plate 3590, one of the flat surfaces 3558 extends distally in a direction away from a proximal-most edge 3594

of the anterior plate **3590** and transitions to an anterior negative contour **3560** that extends distally away from the flat surface **3558**. The anterior negative contour **3560** in turn transitions to another of the flat surfaces **3558** which extends distally away from the anterior negative contour **3560** toward the distal plate **3592**. In the case of the distal plate **3592**, one of the flat surfaces **3558** extends posteriorly in a direction away from the anterior plate **3590** and transitions to an distal negative contour **3560** that extends posteriorly away from the flat surface **3558**. The distal negative contour **3560** in turn transitions to another of the flat surfaces **3558** which extends posteriorly away from the distal negative contour **3560** toward a posterior-most edge **3596** of the distal plate **3592**.

The cutting block **3550** also includes a number of pin guides **3562**. In use, the pin guides **3562** are used as drill guides to establish guide pinholes in the bone of the patient for securing a number of guide pins **3564** to the bone. The cutting block **3550** may then be coupled and secured to the patient's bone via the guide pins **3564**.

The cutting block **3550** also includes five captured cutting guides **3566**, **3568**, **3570**, **3572**, **3574**. The illustrative cutting guide **3566** is a distal cutting guide, the cutting guide **3568** is an anterior cutting guide, and the cutting guide **3574** is a posterior cutting guide. The cutting guides **3570**, **3572** are angled cutting guides. It should be appreciated that the cutting guides **3566**, **3568**, **3570**, **3572**, **3574** allow the orthopaedic surgeon to perform up to five different bone cuts using the same cutting block **3550**.

In use, the cutting block **3550** is configured to be coupled to a patient's bone **3550**, such as the femur or tibia. Again, because the bone-contacting surface **3554** of the cutting block **3550** includes negative contour **3560**, the block **3550** may be coupled to the bone **3580** in a pre-planned, unique position. The cutting block **3550** may be secured to the bone **3580** via use of a number of guide pins **3564** received in the pin guides **3562** and the bone **3580**. After the cutting block **3550** has been secured to the patient's bone **3580** as illustrated in FIG. **94**, the orthopaedic surgeon may use the block **3550** to perform any one of a number of resections of the bone **3580** using one or more of the cutting guides **3566**, **3568**, **3570**, **3572**, **3574**.

Additionally, the cutting block **3550** may be used to perform a number of re-cuts of the patient's bone. For example, as illustrated in FIG. **95**, after the initial resectioning procedure, the orthopaedic surgeon may determine that additional bone must be removed from the patient's bone **3580**. If so, the surgeon may re-secure the cutting block **3550** to the patient's resected bone **3580**. In such a configuration, the planar bottom surfaces **3558** of the bone-contacting surface **3554** contact or confront the planar resected surfaces of the patient's bone. As such, the planar bottom surfaces **3558** allow the cutting block **3550** to remain stable on the resected bone **3580** even though the block **3550** includes the negative contours **3560** defined in the bone-contacting surface **3554**. It should be appreciated that the cutting block **3550** may be used to perform any number of resectioning cuts as described above. As such, the cutting block **3550** provides an amount of intra-operative adjustability to the orthopaedic surgeon.

In other embodiments, adjustability of the positioning and cutting planes of the customized patient-specific orthopaedic surgical instrument may be implemented using other methods. For example, in some embodiments, more than a single customized patient-specific orthopaedic surgical instrument is designed and fabricated in process steps **24-30** of the algorithm **10** described above in regard to FIG. **1**. That is, rather than a single patient-specific orthopaedic surgical instrument, two or more patient-specific instruments may be designed, fabricated, and shipped to the orthopaedic surgeon. Each instrument may be configured to generate different cutting planes. For example, one instrument may be used to perform a resection that is two millimeters greater or lesser than the standard instrument. In this way, the orthopaedic surgeon may decide pre- or intra-operatively which particular instrument to use based on intra-operative analysis of the patient's joint and/or soft tissue complex.

Additionally, in some orthopaedic surgical procedures, the surgeon may remove the posterior cruciate ligament (PCL). In such embodiments, the flexion gap of the patient's joint may be increased. As such, the customized patient-specific orthopaedic instrument may be fabricated to adjust for the increased flexion gap. For example, a cutting block configured to remove an additional amount of bone may be fabricated.

Further, in some embodiments, the femoral lugs of each orthopaedic implant are positioned in the same location across the different sizes of implants. As such, the downsizing or adjustment of sizes for the orthopaedic implants may be done without the need of additional drilling, guide pin attachment, and/or the like.

Referring now to FIG. **96**, in one embodiment, the customized patient-specific orthopaedic surgical instrument may be embodied as a cutting block **4100**. The cutting block **4100** is configured to be coupled to a bone, such as femur or tibia, of a patient. The cutting block **4100** includes a body **4102** having a bone-contacting or bone-facing surface **4104** and an outer surface **4106**. The bone-contacting surface **4104** includes a negative contour **4108** configured to receive a portion of the patient's bone having a corresponding contour. As discussed above, the negative contour **4108** of the bone-contacting surface **4104** allows the positioning of the cutting block **4100** on the patient's bone in a unique pre-determined location and orientation.

The cutting block **4100** also includes a number of pin guides **4110**. In use, the pin guides **4110** are used as drill guides to establish guide pin holes in the bone of the patient for securing a number of guide pins (not shown) to the bone. The cutting block **4100** may then be coupled to the patient's bone via the guide pins. The cutting block **4100** also includes a cutting guide **4112**. Illustratively, the cutting guide **4112** is embodied as a captured cutting guide, but may be embodied as a non-captured or open cutting guide in other embodiments. It should be appreciated that because the position of the cutting guide **4112** is pre-determined due to the configuration of the cutting block **4100**, any bone cuts made using the patient-specific cutting block **4100** correspond to the predetermined bone cutting planes (see process step **24** of algorithm **10** described above in regard to FIG. **1**).

Referring now to FIG. **97**, in another embodiment, a customized patient-specific orthopaedic surgical instrument **4150** includes a cutting block **4152** and a leg clamp **4154**. The cutting block **4152** is illustratively configured to be coupled to the patient's tibia, but may be configured to be coupled to another bone of the patient, such as the femur, in other embodiments. The cutting block **4152** is customized to the particular patient and, similar to the cutting block **4100** described above in regard to FIG. **96**, includes a bone-contacting or bone-facing surface **4153** having a negative contour (not shown) configured to receive a portion of the patient's bone having a corresponding contour. As discussed above, the negative contour of the bone-contacting surface

4153 allows the positioning of the cutting block **4150** on the patient's bone in a unique pre-determined location and orientation.

The illustrative cutting block **4152** includes a non-captured cutting guide **4158**. That is, a top surface **4156** of the cutting block **4152** is used as the cutting guide and is aligned such that the cutting plane established using the cutting block **4152** corresponds to the cutting plane determined in process step **24** of the algorithm **10** described above in regard to FIG. **1**. Additionally, the illustrative cutting block **4152** is positioned such that the block **4152** extends around the medial side of the patient's bone a distance greater than the distance that the block **4152** extends around the lateral side of the patient's bone. However, in other embodiments, the block **4152** may be aligned in a different manner. The cutting block **4152** may or may not be secured to the patient's bone. For example, in one embodiment, the cutting block **4152** is secured to the patient's bone via a number of guide pins similar to the cutting block **4100** described above in regard to FIG. **96**.

The cutting block **4152** is coupled to the leg clamp **4154** via a rod **4160**, which extends out of the incision site **4162** of the patient's leg. The rod **4160** is configured such that the clamp **4154** may be secured to the patient's leg. The clamp **4154** may be made from any suitable material and, in one particular embodiment, is disposable. For example, the clamp **4154** may be formed from a plastic material and secured to the patient's leg via use of a securing device such as a hook-and-loop device. Additionally, in some embodiments, the clamp **4154** is adjustable to fit a number of different leg sizes. However, in other embodiments, the clamp **4154** may be patient-specific and designed to fit the leg of the particular patient.

In use, the cutting block **4152** of the customized patient-specific orthopaedic surgical instrument **4150** is inserted into the incision site **4162** and, in some embodiments, secured to the patient's bone via a number of guide pins. The clamp **4154** is secured to the patient's leg using the securing device, such as a hook-and-loop mechanism. It should be appreciated that because the cutting block **4152** is secured to the patient's leg via the clamp **4154**, the stability of the block **4152** may be increased.

Referring now to FIG. **98**, in another embodiment, a customized patient-specific orthopaedic surgical instrument **4200** includes a cutting block **4202** and a brace **4204**. Similar to the cutting block **4150** described above in regard to FIG. **97**, the cutting block **4202** is illustratively configured to be coupled to the patient's tibia **4206**, but may be configured to be coupled to another bone of the patient, such as the femur **4208**, in other embodiments. The cutting block **4202** is customized to the particular patient and, similar to the cutting block **4100** described above in regard to FIG. **96**, includes a bone-contacting or bone-facing surface **4210** having a negative contour (not shown) configured to receive a portion of the patient's bone having a corresponding contour. As discussed above, the negative contour of the bone-contacting surface **4210** allows the positioning of the cutting block **4202** on the patient's bone in a unique pre-determined location and orientation.

The illustrative cutting block **4202** includes an non-captured cutting guide **4212** similar to the cutting block **4152** described above. That is, a top surface of the cutting block **4202** is used as the cutting guide and is aligned such that the cutting plane established using the cutting block **4202** corresponds to the cutting plane determined in process step **24** of the algorithm **10** described above in regard to FIG. **1**. The cutting block **4202** includes a number of pin guides **4214**, which facilitate the coupling of the cutting block **4202** to the tibia **4206** via a number of guide pins.

The brace **4204** of the instrument **4200** includes an arm **4216**, which extends from the cutting block **4202** and out of the incision site **4222** of the patient's leg. The brace **4204** also includes a bone support **4218** coupled to the arm **4216**. The bone support **4218** includes two inwardly extending flanges **4220**. The bone support **4218** is configured to receive or otherwise be supported by the apex of the patient's tibia **4206** to provide an amount of stability to the cutting block **4202**. As such, the arm **4216** may extend from the cutting block **4202** any suitable distance such that the bone support **4218** is positioned to engage the tibial apex.

Referring now to FIG. **99**, in another embodiment, a customized patient-specific orthopaedic surgical instrument **4250** includes a cutting block **4252** and a brace **4254**. Similar to the cutting block **4200** described above in regard to FIG. **98**, the cutting block **4252** is illustratively configured to be coupled to the patient's tibia, but may be configured to be coupled to another bone of the patient, such as the femur, in other embodiments. The cutting block **4252** is customized to the particular patient and, similar to the cutting block **4100** described above in regard to FIG. **96**, includes a bone-contacting or bone-facing surface **4256** having a negative contour (not shown) configured to receive a portion of the patient's bone having a corresponding contour. As discussed above, the negative contour of the bone-contacting surface allows the positioning of the cutting block **4252** on the patient's bone in a unique pre-determined location and orientation.

The illustrative cutting block **4250** includes a non-captured cutting guide **4258** similar to the cutting block **4202** described above. That is, a top surface of the cutting block **4250** is used as the cutting guide and is aligned such that the cutting plane established using the cutting block **4252** corresponds to the cutting plane determined in process step **24** of the algorithm **10** described above in regard to FIG. **1**. The cutting block **4252** also includes a number of pin guides **4260**, which facilitate the coupling of the cutting block **4202** to the tibia via a number of guide pins.

The brace **4254** of the instrument **4250** includes an arm **4262**, which extends from the cutting block **4252** and out of the incision site **4268** of the patient's leg. The brace **4254** also includes a flat flange **4264** coupled to the arm **4262**. The flange **4264** is positioned to be substantially parallel to the patient's tibia and includes a number of apertures **4266** defined therethrough. The flange **4264** is secured to the patient's tibia via a number of percutaneous pins or screws **4270** that are received in the aperture **4266**. It should be appreciated that because the flange **4264** is secured to the patient's bone, the stability of the cutting block **4252** may be increased.

Referring now to FIG. **100**, in another embodiment, a customized patient-specific orthopaedic surgical instrument **4300** includes a patient-specific cutting block **4302** and an alignment rod **4304**. The cutting block **4302** is configured to be coupled to a bone of the patient such as, for example the patient's tibia or femur. Similar to the cutting blocks **4152**, **4202**, **4252** described above, the cutting block **4302** is customized to the particular patient and includes a bone-contacting or bone-facing surface **4306** having a negative contour (not shown) configured to receive a portion of the patient's bone having a corresponding contour. As discussed above, the negative contour of the bone-contacting surface **4306** allows the positioning of the cutting block **4302** on the patient's bone in a unique pre-determined location and orientation.

In some embodiments, the cutting block **4302** may include a captured cutting guide. Additionally or alternatively, the cutting block **4302** may include a non-captured cutting guide. The cutting block **4302** may or may not be configured to be secured to the patient's bone. For example, in some embodiments, the cutting block may include a number of pin guides to facilitate the securing of the cutting block **4302** to the patient's bone via a number of guide pins (not shown).

The cutting block **4302** is coupled to the alignment rod **4304** via a horizontal bar **4310**, which extends out of the incision site **4308**. In the illustrative embodiment, the horizontal bar **4310** is integral to the alignment rod **4304**. The alignment rod **4304** includes an upper rod **4312** and a lower rod **4314** having a diameter smaller than the diameter of the upper rod **4312**. In the illustrative embodiment, the lower rod **4314** is a telescoping rod and is configured to be retracted into and extended from the upper rod **4312** such that the overall length of the alignment rod **4314** is adjustable. In other embodiments, the upper rod **4312** may be a telescoping rod and configured to be retracted into and extended from the lower rod **4314**. In the illustrative embodiment, the position of the lower rod **4314** relative to the upper rod **4312** may be fixed via use of a securing device **4316**. The securing device **4316** may be embodied as a thumbscrew or other securing device capable of securing the lower rod **4314** in a fixed position relative to the upper rod **4312**.

The alignment rod **4304** also includes an ankle brace **4318** configured to be secured to the ankle of the patient. The ankle brace extends from the lower rod **4314** in a substantially orthogonal orientation and includes a rear strap or clamp **4320**. The rear strap **4320** is configured to secure the patient's ankle to the ankle brace **4318**. In some embodiments, the rear strap **4320** is removable from the ankle brace **4318** to allow the patient's ankle to be received therein.

In use, the cutting block **4302** may be coupled to the patient's bone via the guide pins. The lower rod **4314** may be extended from or retracted into the upper rod **4312** to adjust the overall length of the alignment rod **4304** to the length of the patient's leg. After the alignment rod has been adjusted, the ankle brace **4318** may be secured to the patient's ankle. It should be appreciated that in use the alignment rod **4304** may be positioned to target the center of the patient's ankle to align the cutting block **4302** accordingly.

Referring now to FIG. **101**, in another embodiment, a customized patient-specific orthopaedic surgical instrument **4350** includes a patient-specific cutting block **4352** and an alignment device **4354**. The cutting block **4352** is configured to be coupled to a bone of the patient such as, for example the patient's tibia or femur. Similar to the cutting blocks **4152**, **4202**, **4252** described above, the cutting block **4352** is customized to the particular patient and includes a bone-contacting surface **4356** having a negative contour (not shown) configured to receive a portion of the patient's bone having a corresponding contour. As discussed above, the negative contour of the bone-contacting surface **4356** allows the positioning of the cutting block **4352** on the patient's bone in a unique pre-determined location and orientation.

In some embodiments, the cutting block **4352** may include a captured cutting guide. Additionally or alternatively, the cutting block **4352** may include a non-captured cutting guide. The cutting block **4352** may or may not be configured to be secured to the patient's bone. For example, in some embodiments, the cutting block may include a number of pin guides to facilitate the securing of the cutting block **4352** to the patient's bone via a number of guide pins (not shown).

As shown in FIG. **101**, the instrument **4350** includes an extension rod **4358** coupled to the cutting block **4352** and extending out of the incision site **4360**. Illustratively, the extension rod **4358** is substantially straight. The alignment device **4354** is secured to an end **4366** of the extension rod **4358**. The alignment device **4354** includes a tensioner **4362**, such as a weight, coupled to the end **4366** via a cord **4364**. In other embodiments, the orthopaedic surgeon may apply a downward force on the cord **4364** in place of the tensioner **4362**.

In use, the cutting block **4352** may be coupled to the patient's bone via the guide pins. In so doing, the position of the cord **4364** and the tensioner **4362** relative to the patient's leg may be used to align the cutting block **4352** accordingly. Once so aligned, the cord **4364** and tensioner **4362** may be removed from the cutting block **4352** if so desired.

Referring now to FIGS. **102** and **103**, in another embodiment, the customized patient-specific orthopaedic surgical instrument may be embodied as a cutting block **4400**. The cutting block **4400** is configured to be coupled to a bone **4410** of the patient. The cutting block **4400** is illustratively a tibial cutting block, but may be configured for use with other bones, such as the femur, in other embodiments. The cutting block **4400** includes a bone-contacting or bone-facing surface **4402** and an outer surface **4404**. The bone-contacting surface **4402** includes a negative contour **4406** (see FIG. **103**) configured to receive a portion of the patient's bone having a corresponding contour. As discussed above, the negative contour **4406** of the bone-contacting surface **4402** allows the positioning of the cutting block **4400** on the patient's bone **4410** in a unique pre-determined location and orientation.

The cutting block **4400** includes a cutting guide **4412**. Illustratively, the cutting guide **4412** is a captured cutting guide, but may be embodied as a non-captured or open cutting guide in other embodiments. It should be appreciated that because the position of the cutting guide **4412** is pre-determined due to the configuration of the cutting block **4400**, any bone cuts made using the patient-specific cutting block **4400** correspond to the predetermined bone cutting planes (see process step **24** of algorithm **10** described above in regard to FIG. **1**).

The cutting block **4400** also includes a number of pin guides **4414**. The pin guides **4414** are angled relative to the outer surface **4404** of the block **4400**. The location and angulation of the pin guides **4414** is customized to the particular patient such that when the cutting block is coupled to the patient's bone **4410**, a number of guide pins **4416** may be inserted into the pin guides **4414**. When so position, a portion of each guide pin **4416** extends from the bone-contacting surface **4402**. The guide pins **4416** are so positioned such that guide pins contact the surface of the bone **4410**. For example, in one particular embodiment, the pin guides **4414** are configured such that the bone **4410** of the patient is wedged between the guide pins **4416** when the pins **4416** are inserted into the guides **4414**. It should be appreciated that is use the contact between the guide pins **4416** and the patient's bone may increase the stability of the cutting block **4400**.

In some embodiments, the cutting block **4400** may also include other pin guides (not shown) to facilitate the coupling of the cutting block **4400** to the patient's bone **4410**. That is, a number of guide pins may be inserted into the additional guides to secure the cutting block **4400** to the tibia

4410 as discussed above. Additionally, in some embodiments, the cutting block **4400** may include an alignment rod **4418** extending downwardly therefrom. In use, an orthopaedic surgeon may use the alignment rod **4418** to reference the orientation of the cutting block **4400** relative to the patient's bone **4410**. For example, the alignment rod **4418** may be used to reference the anterior/posterior angulation of the cutting block **4400**.

Referring now to FIG. **104**, in another embodiment, the customized patient-specific orthopaedic surgical instrument may be embodied as a cutting block **4450**. The cutting block **4450** is configured to be coupled to a bone **4464** of the patient. The cutting block **4450** is illustratively a tibial cutting block, but may be configured for use with other bones, such as the femur, in other embodiments. The cutting block **4450** includes a bone-contacting or bone-facing surface **4452** and an outer surface **4454**. The bone-contacting surface **4452** includes a negative contour **4456** configured to receive a portion of the patient's bone having a corresponding contour. As discussed above, the negative contour **4456** of the bone-contacting surface **4452** allows the positioning of the cutting block **4450** on the patient's bone **4464** in a unique pre-determined location and orientation.

The cutting block **4450** includes a cutting guide **4468**. Illustratively, the cutting guide **4468** is a captured cutting guide, but may be embodied as a non-captured or open cutting guide in other embodiments. It should be appreciated that because the position of the cutting guide **4468** is pre-determined due to the configuration of the cutting block **4450**, any bone cuts made using the patient-specific cutting block **4450** correspond to the predetermined bone cutting planes (see process step **24** of algorithm **10** described above in regard to FIG. **1**). In some embodiments, the cutting block **4450** may also include a number of pin guides (not shown). As discussed above, the pin guides may be used to facilitate the coupling of the cutting block **4450** to the patient's bone **4464** via use of a number of corresponding guide pins (not shown).

The cutting block **4450** also includes a post **4460** extending from the bone-contacting surface **4456**. The post **4460** is configured to be received in an aperture **4462** formed in the patient's bone **4464**. The aperture **4462** may be defined in the patient's tibia or bone **4464** via use of an orthopaedic drill or the like. The position of the aperture **4462** may be customized to the particular patient. Additionally, the position of the aperture **4462** may be standardized relative to the particular type of bone being resected. After the aperture **4462** is formed, a number of various orthopaedic instruments may use the aperture **4462** as a common guide or guide point. For example, in use, the illustrative cutting block **4450** is configured to be coupled to the patient's tibia **4464** such that the post **4460** is received in the aperture **4462**. In some embodiments, as discussed above, the cutting block **4450** may also be secured to the bone **4464** via a number of guide pins. The patient's bone **4464** may then be resected. It should be appreciated that when the post **4460** is received in the aperture **4462**, the stability of the cutting block **4450** may be increased.

Referring now to FIGS. **105** and **106**, in another embodiment, the customized patient-specific orthopaedic surgical instrument may be embodied as a tibial cutting block **4500**. The tibial cutting block **4500** is configured to be coupled to a tibia **4502** of the patient. The tibial cutting block **4500** includes a body **4504** having a tubercle-receiving clamp **4506**. The clamp **4506** includes two arms **4508** that extend downwardly from the body **4504**. The cutting block **4500** also includes a flange **4510** defined at an end of the body **4504** opposite the clamp **4506**.

The cutting block **4500** also includes a captured cutting guide **4512**. The cutting guide **4512** extends from a side of the body **4504**. Illustratively, the cutting guide **4512** is curved such that the guide **4512** wraps around a portion of the tibia **4502**. The clamp **4506** is customized to the particular patient's bony anatomy such that the position of the cutting guide **4512** relative to the tibia **4502** is predetermined. It should be appreciated that because the position of the cutting guide **4512** is predetermined, any bone cuts made using the patient-specific cutting block **4500** correspond to the predetermined bone cutting planes (see process step **24** of algorithm **10** described above in regard to FIG. **1**). In some embodiments, the cutting block **4500** may also include a number of pin guides (not shown). As discussed above, the pin guides may be used to facilitate the coupling of the cutting block **4500** to the patient's bone **4502** via use of a number of corresponding guide pins (not shown).

In use, as shown in FIG. **106**, the cutting block **4500** is secured to the patient's tibia **4502** by impacting the cutting block **4500** onto the bone **4502** such that the tibial tubercle **4514** of the patient's tibia **4502** is received in the clamp **4506**. To do so, an orthopaedic hammer or other impacting device may be used to apply an amount of downward force on the flange **4510** of the block **4500**. The cutting block **4500** is secured to the patient's bone **4502** via the clamp **4506**.

Referring now to FIGS. **107** and **108**, in another embodiment, the customized patient-specific orthopaedic surgical instrument may be embodied as a tibial cutting block **4550**. The tibial cutting block **4550** is configured to be coupled to a tibia **4502** of the patient. The tibial cutting block **4550** includes a body **4554** having a bone-contacting or bone-facing surface **4556** and an outer surface **4558**. The bone-contacting surface **4556** includes a negative contour **4560** configured to receive a portion of the patient's bone having a corresponding contour. As discussed above, the negative contour **4560** of the bone-contacting surface **4556** allows the positioning of the cutting block **4550** on the patient's bone **4502** in a unique pre-determined location and orientation.

The cutting block **4550** includes a cutting guide **4562**. Illustratively, the cutting guide **4562** is a captured cutting guide, but may be embodied as a non-captured or open cutting guide in other embodiments. It should be appreciated that because the position of the cutting guide **4562** is pre-determined due to the configuration of the cutting block **4550**, any bone cuts made using the patient-specific cutting block **4550** correspond to the predetermined bone cutting planes (see process step **24** of algorithm **10** described above in regard to FIG. **1**). In some embodiments, the cutting block **4550** may also include a number of pin guides (not shown). As discussed above, the pin guides may be used to facilitate the coupling of the cutting block **4550** to the patient's bone **4502** via use of a number of corresponding guide pins (not shown).

The cutting block **4550** also includes a pair of tabs **4564** that extend from an upper side **4566** of the body **4564** of the cutting block **4550**. The tabs **4564** are spaced apart to define an open area **4568** therebetween. Additionally, the tabs **4564** are curved when viewed in the medial/lateral plane. In use, the cutting block **4550** is coupled to the patient's tibia **4502** such that the tabs **4564** are received between the tibia **4502** and the posterior condyles of the patient's femur **4570** when the patient's knee is in flexion. In such a position, the tabs **4564** are secured in place by the joint force between the femur **4570** and the tibia **4502**. In should be appreciated that by securing the tabs **4564** between the femur **4570** and the

tibia **4502**, the stability of the cutting block **4550** may be improved. Additionally, in some embodiments, the cutting block **4550** may be secured to the tibia **4502** via use of guide pins for further stability.

Referring now to FIGS. **109** and **110**, in another embodiment, the customized patient-specific orthopaedic surgical instrument may be embodied as a cutting block **4600**. The cutting block **4600** is configured to be coupled to a bone **4602** of the patient. For example, the cutting block **4600** may be configured to be coupled to a tibia, femur, or other bone of the patient. The cutting block **4600** includes a bone-facing surface **4604** and an outer surface **4606**. The illustrative cutting block **4600** includes a non-captured cutting guide **4608**, but may include a captured cutting guide in other embodiments. The non-captured cutting guide **4608** is defined by a side surface **4610** of the cutting block **4600**. In use, an orthopaedic surgeon may use the surface **4610** as a guide for the cutting blade of a bone saw or the like.

The cutting block **4600** also includes a number of guide pins **4612**. The guide pins **4612** extend from the bone-facing surface **4604** of the block **4600**. Each of the guide pins **4612** extend from the bone-facing surface **4604** a particular length. The length of each guide pin **4612** is determined based on the particular bony anatomy of the patient. That is, the length of the guide pins **4612** is selected such that the cutting block **4600** is patient-specific. Additionally, length of the guide pins **4612** allows the positioning of the cutting block **4600** in a pre-determined location and orientation relative to the bone **4602**.

In use, the cutting block **4600** is coupled to the patient's bone **4602** as illustrated in FIG. **110**. Again, the guide pins **4612** are designed to have a length such that the end **4614** of each pin **4612** contacts the surface of the bone **4602**. In some embodiments, an amount of form-fitting, hardening material **4616** may be positioned between the cutting block **4600** and the patient's bone **4602** to further stabilize the cutting block **4600**. The material **4616** may be embodied as any type of form-fitting material such as, for example, dental plaster, configured to hardened after a set-up period. In some embodiments, the material **4616** is positioned in a formable container such as a bag or the like.

Referring now to FIGS. **111** and **112**, in another embodiment, a customized patient-specific orthopaedic surgical instrument **4650** includes a cutting block **4652** and a clamp **4654** coupled to the block **4652**. The cutting block **4652** is configured to be coupled to a bone **4656** of the patient, such as the tibia or femur. The cutting block **4652** includes a bone-contacting or bone-facing surface **4658** and an outer surface **4660** (see FIG. **112**). The bone-contacting surface **4658** includes a negative contour **4662** configured to receive a portion of the patient's bone **4656** having a corresponding contour. As discussed above, the negative contour **4662** of the bone-contacting surface **4658** allows the positioning of the cutting block **4652** on the patient's bone **4656** in a unique pre-determined location and orientation.

The cutting block **4652** also includes a cutting guide **4664**. Illustratively, the cutting guide **4664** is a captured cutting guide, but may be embodied as a non-captured or open cutting guide in other embodiments. It should be appreciated that because the position of the cutting guide **4664** is pre-determined due to the configuration of the cutting block **4652**, any bone cuts made using the patient-specific cutting block **4652** correspond to the predetermined bone cutting planes (see process step **24** of algorithm **10** described above in regard to FIG. **1**).

The clamp **4654** includes a base **4666** received on a threaded rod **4668**. The base **4666** of the clamp **4654** is coupled to the cutting block **4652** via the threaded rod **4668**. A handle **4670** is secured to the threaded rod **4668** at an end opposite the block **4652**. The clamp **4654** also includes a pair of hooks or arms **4672** coupled to the base **4666**. The hooks **4672** are configured to pivot with respect to the base **4666**.

In use, the cutting block **4652** is configured to be coupled to the bone **4656** of the patient. The cutting block **4652** is secured to the bone **4656** via the clamp **4654**. To do so, the hooks **4672** are positioned around the bone **4656** as illustrated in FIG. **112**. The handle **4670** may then be operated (i.e., twisted in the appropriate direction) to cause the base **4666** of the clamp **4654** to be moved away from the cutting block **4652**. As the base **4666** of the clamp **4654** is moved away from the block **4652**, the hooks **4672** contact the bone **4656**. As such, the cutting block **4652** may be secured to the bone **4656** by tightening the clamp **4654** in the above-described manner. Although described as being positioned around the bone **4656**, the clamp **4654** may be configured to be positioned around the outside of the patient's leg. That is, in some embodiments, the hooks **4672** of the clamp **4654** may be positioned around the skin of the patient's leg. In such embodiments, the hooks **4672** engage the patient's skin when the clamp **4654** is tightened.

The hooks **4672** may have any one of a number of different configurations in other embodiments. For example, as illustrated in FIG. **113**, each of the hooks **4672** may include a post **4674** defined at the end **4676** of the hook **4672**. Each post **4674** includes a threaded aperture **4675** defined therethrough. A threaded pin **4678** is received in each threaded aperture **4675**. Each threaded pin **4678** includes a pointed end **4679** configured to contact the patient's bone **4656** or skin during use. The position of the threaded pin **4678** relative to the hook **4672** may be adjusted by threading the pin **4678** into or out of the threaded aperture **4675**. As such, the hooks **4672** may be positioned around the patient's bone **4656** or skin, depending on the embodiment, and the pins **4678** may be threaded into a position such that the pins **4678** engage the bone **4656** or skin to secure the clamp **4654** to the patient's leg.

Referring to FIG. **114**, in another embodiment, each of the hooks **4672** of the clamp **4654** include a linkage arm **4680** and a pivotable hook **4682**. The linkage arms **4680** are coupled to the base **4666** and are configured to pivot with respect thereto. The hooks **4682** are coupled to the respective linkage arms **4680** via a hinge **4683**. The hooks **4682** are configured to pivot with respect to the respective linkage arms **4680**. In some embodiments, the pivotable hooks **4682** may include a biasing member **4684** secured to the tip of the hook **4682** and extending to the base of the hook **4682**. The biasing member **4684** may be formed from a metallic material in some embodiments. The biasing member **4684** is configured to bend or otherwise deform when the clamp **4654** is coupled to patient's bone **4656** or leg to reduce the likely hood that the clamp **4654** damages the bone **4656** or skin tissue of the patient.

Referring to FIG. **115**, in some embodiments, the clamp **4654** may be embodied as a halo clamp **4690**. The halo clamp **4690** is configured to be positioned around the patient's bone **4656**. The halo clamp **4690** includes a number of posts **4692**, each having a threaded aperture **4693** defined therethrough. A threaded pin **4694** is received in each threaded aperture **4693** and includes a pointed end **4695**. The pointed ends **4695** of the pins **4694** are configured to contact the patient's bone **4656** when the halo clamp **4690** is coupled to the bone **4656**. The position of the threaded pins **4694** relative to the halo clamp **4690** may be adjusted by threading the pins **4694** into or out of the threaded apertures **4693**.

In use, the halo clamp **4690** is configured to be positioned around the patient's bone **4656** and secured thereto via the threaded pins **4694**. To do so, the threaded pins **4694** may be threaded into the respective posts **4692** until each pin contacts the bone **4656** of the patient with enough force to secure the halo clamp **4690** thereto. In one particular embodiment, the halo clamp **4690** is configured such that the center of mass of the bone **4656** is located at or near the center of the halo clamp **4690**. That is, the customized patient-specific orthopaedic surgical instrument **4650** is designed such that the cutting block **4652** is configured to be positioned in the desired position, as determined in the process steps **24**, **26** of the algorithm **10** described above in regard to FIG. **1**, when the halo clamp **4690** is coupled to the bone **4656** in such a position that the center of mass of the bone is at or near the center of the halo clamp **4690**. The center of mass of the bone may be determined by, for example, analysis of the medical images generated in process step **12** of the algorithm **10**.

Referring now to FIG. **116**, in some embodiments, a leg brace **4700** may be coupled to a patient's leg **4706** during the generation of the medical images in the process step **12** of the algorithm **10** described above in regard to FIG. **1**. The leg brace **4700** includes a medial support rod **4702** and a lateral support rod **4704**. In some embodiments, the shape of the rods **4702**, **4704** may be customized for the particular patient. That is, the rods **4702**, **4704** may be shaped such that the rods **4702**, **4704** define a negative contour configured to receive a corresponding contour of the patient's leg **4706**. However, in other embodiments, the support rods **4702**, **4704** may be universally shaped such that the leg brace **4700** is usable with a number of different patients. The leg brace **4700** includes an ankle clamp **4708** and a thigh clamp **4710**. The ankle clamp **4708** is configured to be secured around the ankle area of the patient's leg **4706** and the thigh clamp **4710** is configured to be secured around the thigh area of the patient's leg **4706**. In some embodiments, the clamps **4708**, **4710** are adjustable to match the anatomy of different patients. The clamps **4708**, **4710** may be formed from a plastic or fabric material. In use, the leg brace **4700** may be secured to the patient's leg **4706** to stabilize the patient's leg during the generation of the medical images such as during the performance of a computed tomography (CT) scan. By stabilizing the patient's leg, the medical images produced by the image generation process may be more accurate.

Referring now to FIG. **117**, in some embodiments, a number of markers **5050** may be secured to the relevant bone **5100** of the patient prior to the generation of the medical images in process step **12**. The markers **5050** may be embodied as pins, studs, or other devices securable to the bone **5100** of the patient in a pre-operative procedure. The markers **5050** may be secured to the bone **5100** via use of an orthopaedic drill in a manner similar to a guide pin, via use of a suitable adhesive such as bone cement, or the like. When so secured, a portion of each marker **5050** extends outwardly from the bone **5100**. Alternatively, in other embodiments, the markers **5050** may be configured to be flush or substantially flush with the surface of the bone **5100**. The markers **5050** may be formed from any material visible in the medical image such as a metallic material. The markers **5050** are secured to the bone **5100** in the general area to which the customized patient-specific orthopaedic surgical instrument is to be coupled. For example, in one embodiment, the markers **5050** identify particular landmark features of the patient's bone **5100**. Additionally, the markers **5050** may be secured to the bone **5100** in any configuration and may be embodied as any number of individual markers.

In some embodiments, the negative contour of the customized patient-specific orthopaedic surgical instrument will include recesses designed to receive each of the markers **5050**. In embodiments wherein the markers **5050** are substantially flush with the surface of the bone **5100**, the customized patient-specific orthopaedic surgical instrument may include any number of windows or the like to visually align the instrument with the flush markers **5050**. As such, the markers **5050** may increase the ease of positioning of the patient-specific surgical instrument to the bone **5100** of the patient, in particular in generally planar areas. After the orthopaedic surgical procedure has been performed by the surgeon in process step **32**, the markers **5050** may be removed from the bone of the patient. Alternatively, in some embodiments, the markers **5050** are removed after the generation of the medical images.

Referring now to FIG. **118**, in some embodiments, the orthopaedic surgeon may mark or otherwise indicate the general desired location of the customized patient-specific orthopaedic surgical instrument relative to the bone **5100**. For example, the orthopaedic surgeon may highlight or otherwise define a marking **5102** of the desired area in the medical images generated in process step **12**. The orthopaedic surgeon may generate such an indication or highlighting using a suitable software application or via hand-drawing on hard copies of the medical images, which are subsequently sent to the vendor. The particular shape, size, and location of the marking **5102** on the bone **5100** selected by the orthopaedic surgeon may be determined based on any criteria. For example, in some embodiments, the location of the marking **5102** may be determined based on the orthopaedic surgeon's preferences, the type and/or size of orthopaedic prosthesis to be used, the particular orthopaedic surgical procedure to be performed, and/or any other criteria selected by the orthopaedic surgeon.

Referring now to FIG. **119**, in one embodiment, the customized patient-specific orthopaedic surgical instrument may be embodied as a femoral cutting block **5150**. The femoral cutting block **5150** is configured to be coupled to a femur **5152** of the patient. The femoral cutting block **5150** includes a bone-contacting or bone-facing surface **5154** and an outer surface **5156**. The bone-contacting surface **5154** includes a negative contour (not shown) configured to receive a portion of the patient's bone having a corresponding contour. As discussed above, the negative contour of the bone-contacting surface **5154** allows the positioning of the femoral cutting block **5150** on the patient's bone **5152** in a unique pre-determined location and orientation.

The femoral cutting block **5150** also includes a number of pin guides **5158**. In use, the pin guides **5158** are used as drill guides to establish guide pin holes in the femur **5152** for securing a number of guide pins **5160** to the bone **5152**. The cutting block **5150** also includes a cutting guide **5162**. Illustratively, the cutting guide **5162** is a captured cutting guide, but may be embodied as a non-captured or open cutting guide in other embodiments. It should be appreciated that because the position of the cutting guide **5162** is pre-determined due to the configuration of the femoral cutting block **5150**, any bone cuts made using the patient-specific femoral cutting block **5150** correspond to the pre-determined bone cutting planes (see process step **24** of algorithm **10** described above in regard to FIG. **1**).

In use, the femoral cutting block **5150** is configured to be coupled to the patient's femur **5152**. Again, because the bone-contacting surface **5154** of the femoral cutting block **5150** includes negative contour, the block **5150** may be coupled to the femur **5152** in a pre-planned, unique position.

In particular, the femoral cutting block **5150** is designed and configured to couple to the patient's femur **5152** such that the one or more of the guide pins **5160** are received in a corresponding fossa of the femur **5152**. For example, as illustrated in FIG. **119**, the femoral cutting block **5150** is configured such that one of the guide pins **5160** will be inserted into the femur **5152** through a fossa **5164** of the femur **5152**. By securing the guide pin **5160** to the femur **5152** in the fossa **5164**, the stability of the femoral cutting block **5150** on the femur **5152** may be improved. For example, in one particular embodiment, the femoral cutting block **5150** is designed such that the guide pin **5160** is substantially perpendicular to the surface of the femur **5152** defining the fossa **5164**. In some embodiments, the femoral cutting block **5150** may be designed such that any number of the guide pins **5160** is received in a corresponding one or more fossas of the femur **5152** to further provide stability to the block **5150**.

The femoral cutting block **5150** may be designed as described above during the generation of a model of the block **5150** in process step **26** of the algorithm **10** described above in regard to FIG. **1**. To do so, a suitable software algorithm may be used to determine the location of the fossas of the relevant bone of the patient and design the cutting block **5150** such that the guide pins **5160** of the block **5150** are received in one or more of the fossas **5164**.

Referring now to FIG. **120**, in another embodiment, the customized patient-specific orthopaedic surgical instrument may be embodied as a tibial cutting block **5200**. The tibial cutting block **5200** is configured to be coupled to a tibia **5202** of the patient. Similar to the femoral cutting block **5150**, the tibial cutting block **5200** includes a bone-contacting or bone-facing surface **5204** and an outer surface **5206**. The bone-contacting surface **5204** includes a negative contour (not shown) configured to receive a portion of the patient's bone having a corresponding contour. As discussed above, the negative contour of the bone-contacting surface **5204** allows the positioning of the tibial cutting block **5200** on the patient's bone **5202** in a unique pre-determined location and orientation.

The tibial cutting block **5200** also includes a number of pin guides **5208**. In use, the pin guides **5208** are used as drill guides to establish guide pin holes in the tibia **5202** for securing a number of guide pins **5210** to the bone **5202**. The cutting block **5200** also includes a cutting guide **5212**. Illustratively, the cutting guide **5212** is a captured cutting guide, but may be embodied as a non-captured or open cutting guide in other embodiments. Again, it should be appreciated that because the position of the cutting guide **5212** is pre-determined due to the configuration of the tibial cutting block **5200**, any bone cuts made using the patient-specific tibial cutting block **5200** correspond to the predetermined bone cutting planes (see process step **24** of algorithm **10** described above in regard to FIG. **1**).

In use, the tibial cutting block **5200** is configured to be coupled to the patient's tibia **5202**. Again, because the bone-contacting surface **5204** of the tibial cutting block **5200** includes negative contour, the block **5200** may be coupled to the tibia **5202** in a pre-planned, unique position. In particular, similar to the femoral cutting block **5150**, the tibial cutting block **5200** is designed to couple to the patient's tibia **5202** such that the one or more of the guide pins **5210** are received in a corresponding fossa of the tibia **5202**. For example, as illustrated in FIG. **120**, the tibial cutting block **5200** is configured such that the guide pins **5210** will be inserted into the tibia **5202** through the medial and lateral condyles **5214** of the tibia **5202**. By securing the guide pins **5210** to the tibia **5202** in the condyles **5214**, the stability of the tibial cutting block **5200** on the tibia **5202** may be improved. For example, in one particular embodiment, the tibial cutting block **5200** is designed such that the guide pins **5210** are substantially perpendicular to the surface of the tibia **5202** defining the condoyles **5214**. In some embodiments, the tibial cutting block **5200** may be designed such that any number of the guide pins **5200** is received in a corresponding one or more fossas or condyles of the tibia **5202** to further provide stability to the block **5150**.

Again, similar to the femoral cutting block **5150**, the tibial cutting block **5200** may be designed as described above during the generation of a model of the block **5200** in process step **26** of the algorithm **10** described above in regard to FIG. **1**. To do so, a suitable software algorithm may be used to determine the location of the fossas of the relevant bone of the patient and design the cutting block such that the guide pins of the block are received in one or more of the fossas.

Referring now to FIGS. **121-123**, in another embodiment, the customized patient-specific orthopaedic surgical instrument may be embodied as a cutting block **5250**. The cutting block **5250** is illustratively embodied as a femoral cutting block, but may be embodied as cutting blocks for other bones, such as the tibia, in other embodiments. The cutting block **5250** includes a body **5252** having a bone-facing surface **5254** and an outer surface **5256**. A number of guide pin holes **5258** are define in the body **5252** of the block **5250**. A guide pin **5260** is received in each guide pin hole **5258** and configured to slide through the corresponding hole **5258** such that the guide pin **5260** is independently movable and positionable in any one of a number of positions relative to the body **5252**. That is, each of the guide pins **5260** may be positioned such that a portion of the guide pin extends downwardly from the bone-facing surface **5254** and/or extends upwardly from the outer surface **5256** as shown in FIG. **122**.

The cutting block **5250** also includes a cutting guide **5264**. Illustratively, the cutting guide **5264** is a captured cutting guide, but may be embodied as a non-captured cutting guide in other embodiments. Again, it should be appreciated that because the position of the cutting guide **5264** is predetermined due to the configuration of the cutting block **5250**, any bone cuts made using the patient-specific cutting block **5250** correspond to the predetermined bone cutting planes (see process step **24** of algorithm **10** described above in regard to FIG. **1**).

Additionally, the cutting block **5250** includes a securing device **5262** operable to individually lock each guide pin **5260** in a particular position relative to the cutting block **5250**. That is, the guide pins **5260** may be locked in a separate position relative to the cutting block **5250** such that each guide pin **5260** extends downwardly from the bone-facing surface **5254** a selective equal or different distance. As such, the guide pins **5260** may be positioned such that the bone-contacting ends of the guide pins **5260** form a selective contour. For example, as illustrated in FIG. **122**, the guide pins **5260** may be positioned, and subsequently locked into position via the securing device **5262**, such that the bone-contacting ends **5266** of the guide pins **5260** form a negative contour that corresponds to a contour of a portion of a patients bone **5268**. In such a position, a portion of each guide pin may extend from the bone-facing surface **5254** and/or the upper surface **5256**. The securing device **5262** may use mechanical and/or magnetic devices to lock the guide pins **5260** in the desired position.

In use, an orthopaedic surgeon may selectively position the guide pins **5260** to form a negative contour that matches a portion of the patient's bone **5268** such that the cutting block **5250** may be positioned thereon in a unique predetermined location and orientation. To do so, the surgeon may use a programming device **5270** as shown in FIG. **123**. The programming device **5270** includes a housing **5272** having an aperture **5274** configured to receive the cutting block **5250**. The aperture **5274** is defined by a bottom wall **5276** and a number of sidewalls **5278**. The bottom wall **5276** includes a number of holes **5280** defined therein and positioned such that each of the guide pins **5260** of the block **5250** is received in a corresponding hole **5280** of the programming device **5270**. The programming device **5270** includes a push rod **5298** or other adjustment device located in each hole **5280**. The push rods **5298** are configured and operable to selectively position the corresponding guide pin **5260** by pushing the guide pin **5260** to the desired location relative to the block **5250**. The programming device **5270** also includes a coupler **5282** configured to engage the securing device **5262** of the block **5250** when the block **5250** is positioned in the aperture **5274**. The coupler **5282** is configured to operate the securing device **5262** to lock the guide pins **5260** in a desired position.

In one embodiment, the programming device **5270** includes a processor **5284**, a memory device **5286**, an input port **5288**, and one or more actuators or motors **5290**. The processor **5284** may be embodied as any type of processor including, for example, discrete processing circuitry (e.g., a collection of logic devices), general purpose integrated circuit(s), and/or application specific integrated circuit(s) (i.e., ASICs). The memory device **5286** may be embodied as any type of memory device and may include one or more memory types, such as, random access memory (i.e., RAM) and/or read-only memory (i.e., ROM). The input port **5288** may be embodied as any type of input port configured to receive a portable media device (not shown) such as, for example, a compact disk, a digital video disk, a Universal Serial Bus (USB) device, or other portable media device. As such, the input port **5288** may be embodied as any type of serial port, parallel port, flash drive port, or other data port capable of communicating with and storing data on the portable media device.

The processor **5284** is communicatively coupled to the memory device **5286** via a number of communication links **5292** and to the input port **5288** via a number of communication links **5294**. The communication links **5292**, **5294** may be embodied as any type of communication links capable of facilitating communication between the processor **5284** and the memory device **5286** and the input port **5288**, respectively. For example, the communication links **5292**, **5294** may be embodied as any number of cables, wires, fiber optic cables, wireless signals, and/or the like.

The actuators **5290** may be embodied as any type of prime movers, and associated control and power circuitry, capable of separately controlling the push rods **5298** to individually position the guide pins **5260** of the cutting block **5250**. In addition, one or more of the actuators **5290** is configured to control the coupler **5282** to operate the securing device **5262** of the block **5250** to lock the guide pins **5260** in their respective position. The actuators **5290** are communicatively coupled to the processor **5284** via a number of communication links **5296**. Similar to the communication links **5292**, **5294**, the communication links **5296** may be embodied as any type of communication links capable of facilitating communication between the processor **5284** and the actuators **5290**. For example, the communication links **5296** may be embodied as any number of cables, wires, fiber optic cables, wireless signals, and/or the like.

In use, the processor **5284** of the programming device **5270** is configured to control the actuators **5290** to operate the push rods **5298** located in the holes **5280** of the housing **5272**. The push rods **5298** individually position the guide pins **5260** of the cutting block **5250** in a predetermined position relative to the block **5250**. In such a predetermined position, the ends **5266** of the guide pins **5260** form a negative contour configured to receive a predetermined portion of the patient's bone **5268** as shown in FIG. **122**. After the guide pins **5260** have been positioned in the desired locations, the processor **5284** may be configured to control one or more actuators **5290** to operate the coupler **5282**. In response, the coupler **5282** is configured to engage the securing device **5262** of the block **5250** to lock the guide pins **5260** in the predetermined locations.

The processor **5284** may be configured to perform the above-described actions based on a software algorithm stored in the memory device **5286**. The software algorithm may be received via the input port **5288**. For example, the software algorithm executed by the processor **5284** to position the guide pins **5260** of the cutting block **5250** in the desired, predetermined location may be stored on a compact disk or USB device, which is coupled to the input port **5288** to download the software algorithm to the programming device **5270**. The software algorithm may be supplied by a vendor in some embodiments. For example, referring back the FIG. **1**, the model of the customized patient-specific orthopaedic surgical instrument generated in process step **26** of algorithm **10** may be embodied as a software algorithm usable by the programming device **5270**. The vendor may ship or otherwise transmit the software algorithm to the orthopaedic surgeon for downloading into the programming device **5270**. In response, the programming device **5270** configures the guide pins **5260** of the cutting block **5250** for use on the bone **5268** of the patient. In this way, the cutting block **5250** is re-configurable to be a patient-specific cutting block intended for use on a particular patient.

Referring now to FIG. **124**, in some embodiments, a milling machine **5300** is located at a healthcare facility **5302** to facilitate the fabrication of the customized patient-specific orthopaedic surgical instrument. The healthcare facility **5302** may be embodied as the healthcare facility, such as hospital or the like, wherein the orthopaedic surgical procedure is to be performed. Alternatively or additionally, the healthcare facility **5302** may be embodied as the office of the orthopaedic surgeon or other healthcare provider.

The milling machine **5300** includes a processor **5304**, an input port **5306**, and a mill **5310**. The processor **5304** may be embodied as any type of processor including, for example, discrete processing circuitry (e.g., a collection of logic devices), general purpose integrated circuit(s), and/or application specific integrated circuit(s) (i.e., ASICs). The input port **5306** may be embodied as any type of input port configured to receive a portable media device (not shown) such as, for example, a compact disk, a digital video disk, a Universal Serial Bus (USB) device, or other portable media device. As such, the input port **5306** may be embodied as any type of serial port, parallel port, flash drive port, or other data port capable of communicating with and storing data on the portable media device. The processor **5304** is communicatively coupled to the input port **5306** via a number of communication links **5308**. The communication links **5308** may be embodied as any type of communication links capable of facilitating communication between the processor **5304** and the input port **5306**. For example, the com-

munication links **5308** may be embodied as any number of cables, wires, fiber optic cables, wireless signals, and/or the like.

The milling machine **5300** also includes a mill **5310** communicatively coupled to the processor **5304** via a number of communication links **5312**. Similar to communication links **5308**, the communication links **5312** may be embodied as any type of communication links capable of facilitating communication between the processor **5304** and the mill **5310**. For example, the communication links **5312** may be embodied as any number of cables, wires, fiber optic cables, wireless signals, and/or the like. The mill **5310** may be embodied as any type of mill and associated devices and circuitry capable of fabricating a customized patient-specific orthopaedic surgical instrument from suitable material such as plastic or metal.

In use, the processor **5304** is configured to control the mill **5310** to fabricate the customized patient-specific orthopaedic surgical instrument. The processor **5304** may be configured to control the mill **5310** based on a software algorithm received via the input port **5306**. For example, the software algorithm executed by the processor **5304** to control the mill **5310** may be received from a compact disk or USB device, which is coupled to the input port. The software algorithm may be supplied by a vendor in some embodiments. For example, referring back the FIG. **1**, the model of the customized patient-specific orthopaedic surgical instrument generated in process step **26** of algorithm **10** may be embodied as a software algorithm usable by the milling machine **5300**. The vendor may ship or otherwise transmit the software algorithm to the orthopaedic surgeon for downloading into the milling machine **5300**. In response, the milling machine **5300** is configured to fabricate the customized patient-specific orthopaedic surgical instrument based on the software algorithm instructions. In this way, the fabrication of the patient-specific instrument is performed locally, while the design of such instrument may be performed remotely with respect to the healthcare facility **5302**.

One way to facilitate such remote fabrication of the customized patient-specific orthopaedic surgical instrument is via use of a network. In such a case, an instrument request including data relevant to a specific patient is generated by the surgeon or other healthcare provider. The instrument request may include data such as medical images that depict bones of the patient such as the femur and tibia. A client machine **5314** associated with the surgeon or healthcare provider (e.g., located at the healthcare facility) may be used to transmit the instrument request to the vendor.

The vendor may include a design plan system **5316**. The design plan system **5316** may receive an instrument request for a design plan via the network from the client machine **5314** located at, for example, the healthcare facility **5302**, generate a design plan that has been customized based upon information of the received request, and provide the healthcare facility **5302** with the custom design plan via the network. The design plan system **5316** may include one or more computing devices and associated software, middleware, and/or firmware that cooperate to perform the design plan customizations.

Once the design plan is sent to the healthcare facility **5302**, it is transmitted to the milling machine **5300**. The milling machine then uses the design plan to fabricate the customized patient-specific orthopaedic surgical instrument.

While the disclosure has been illustrated and described in detail in the drawings and foregoing description, such an illustration and description is to be considered as exemplary and not restrictive in character, it being understood that only illustrative embodiments have been shown and described and that all changes and modifications that come within the spirit of the disclosure are desired to be protected.

There are a plurality of advantages of the present disclosure arising from the various features of the apparatus, system, and method described herein. It will be noted that alternative embodiments of the apparatus, system, and method of the present disclosure may not include all of the features described yet still benefit from at least some of the advantages of such features. Those of ordinary skill in the art may readily devise their own implementations of the apparatus, system, and method that incorporate one or more of the features of the present invention and fall within the spirit and scope of the present disclosure as defined by the appended claims.

The invention claimed is:

1. A method for a vendor to create a customized patient-specific orthopaedic surgical instrument for a patient of a healthcare facility that is external to the vendor, comprising:

receiving at the vendor, from the healthcare facility external to the vendor, an instrument request for a customized patient-specific orthopaedic surgical instrument that includes data relevant to the patient,

creating at the vendor, in response to receiving the instrument request, a design plan that has been customized for the patient per data of the instrument request, the design plan including a plurality of instructions usable on a fabrication machine located at the healthcare facility to fabricate the customized patient-specific orthopaedic surgical instrument,

sending the design plan from the vendor to the healthcare facility,

loading the plurality of instructions onto a processor of the fabrication machine located at the healthcare facility, and

operating a the fabrication machine located at the healthcare facility to execute the plurality of instructions loaded on the fabrication machine to fabricate the customized patient-specific orthopaedic surgical instrument including a cutting slot sized to receive a cutting saw blade and a customized patient-specific negative contour shaped to receive a predetermined portion of the patient's bone per data of the design plan.

2. The method of claim **1**, wherein sending comprises transmitting the design plan to the healthcare facility via a network.

3. The method of claim **1**, wherein sending comprises mailing the design plan to the healthcare facility.

4. The method of claim **1**, wherein creating at the vendor includes generating the plurality of instructions based upon one or more medical images that depict at least one bone of the patient.

5. The method of claim **1**, further comprising creating the design plan based upon one or more medical images that depict at least one bone of the patient.

6. The method of claim **1**, wherein:

data of the instrument request comprises one or more medical images that depict at least one bone of the patient, and

receiving comprises receiving the instrument request that includes the one or more medical images.

7. The method of claim **1**, wherein operating comprises operating the fabrication machine located at the healthcare facility to fabricate a customized patient-specific femoral cutting block per data of the design plan.

8. The method of claim **1**, wherein operating comprises operating the fabrication machine located at the healthcare

facility to fabricate a customized patient-specific tibial cutting block per data of the design plan.

9. A system for creating a customized patient-specific orthopaedic surgical instrument for a patient of a healthcare facility, comprising:

a client located at the healthcare facility, to generate an instrument request for a customized patient-specific orthopaedic surgical instrument that includes data and images relevant to the patient,

a design plan system to receive the instrument request and to generate a design plan that has been customized based upon the data of the instrument request, the design plan system being located at a vendor and being operable to generate a plurality of instructions usable on a fabrication machine located at the healthcare facility to fabricate the customized patient-specific orthopaedic surgical instrument, and

the fabrication machine located at the healthcare facility external to the vendor, the fabrication machine being operable to execute the plurality of instructions loaded on the fabrication machine to fabricate the customized patient-specific orthopaedic surgical instrument including a cutting slot sized to receive a cutting saw blade and a customized patient-specific negative contour shaped to receive a predetermined portion of the patient's bone per data of the design plan generated by the design plan system.

10. The system of claim **9**, wherein the design plan system generates the design plan based upon at least one image of the instrument request.

11. The system of claim **9**, wherein the client is communicatively coupled to the design plan system via a network.

12. The system of claim **9**, wherein the design plan system is communicatively coupled to the fabrication machine via a network.

13. The system of claim **9**, wherein the fabrication machine is operable to fabricate a customized patient-specific femoral cutting block per data of the design plan generated by the design plan system.

14. The system of claim **9**, wherein the fabrication machine is operable to fabricate a customized patient-specific tibial cutting block per data of the design plan generated by the design plan system.

* * * * *