US010052044B2

(12) **United States Patent**
Shelton, IV et al.

(10) **Patent No.: US 10,052,044 B2**
(45) **Date of Patent: Aug. 21, 2018**

(54) **TIME DEPENDENT EVALUATION OF SENSOR DATA TO DETERMINE STABILITY, CREEP, AND VISCOELASTIC ELEMENTS OF MEASURES**

(71) Applicant: **Ethicon Endo-Surgery, LLC**, Guaynabo, PR (US)

(72) Inventors: **Frederick E. Shelton, IV**, Hillsboro, OH (US); **Jason L. Harris**, Lebanon, OH (US); **Brett E. Swensgard**, West Chester, OH (US); **Richard L. Leimbach**, Cincinnati, OH (US); **Shane R. Adams**, Lebanon, OH (US); **Mark D. Overmyer**, Cincinnati, OH (US)

(73) Assignee: **Ethicon LLC**, Guaynabo, PR (US)

(*) Notice: Subject to any disclaimer, the term of this patent is extended or adjusted under 35 U.S.C. 154(b) by 456 days.

(21) Appl. No.: **14/640,859**

(22) Filed: **Mar. 6, 2015**

(65) **Prior Publication Data**

US 2016/0256187 A1 Sep. 8, 2016

(51) **Int. Cl.**
A61B 17/068 (2006.01)
A61B 5/053 (2006.01)
(Continued)

(52) **U.S. Cl.**
CPC ***A61B 5/0538*** (2013.01); ***A61B 5/4836*** (2013.01); ***A61B 5/6847*** (2013.01); ***A61B 17/068*** (2013.01); ***A61B 17/07207*** (2013.01); ***A61B 17/105*** (2013.01); ***A61B 17/295*** (2013.01); ***A61B 17/3209*** (2013.01); ***A61B 18/1445*** (2013.01); *A61B 2017/00017* (2013.01); *A61B 2017/00022* (2013.01); *A61B 2017/00026* (2013.01); *A61B 2017/0046* (2013.01); *A61B 2017/00075* (2013.01);
(Continued)

(58) **Field of Classification Search**
CPC A61B 17/068; A61B 17/07207; A61B 17/105; A61B 90/60
USPC 227/180.1, 19, 176.1
See application file for complete search history.

(56) **References Cited**

U.S. PATENT DOCUMENTS

66,052 A 6/1867 Smith
662,587 A 11/1900 Blake
(Continued)

FOREIGN PATENT DOCUMENTS

AU 2008207624 A1 3/2009
AU 2010214687 A1 9/2010
(Continued)

OTHER PUBLICATIONS

Disclosed Anonymously, "Motor-Driven Surgical Stapler Improvements," Research Disclosure Database No. 526041, Published: Feb. 2008.

(Continued)

Primary Examiner — Nathaniel Chukwurah

(57) **ABSTRACT**

A powered surgical cutting and stapling instrument is disclosed. The instrument includes at least one sensor to measure at least one parameter associated with the instrument, at least one processor, and a memory operatively associated with the processor. The memory includes machine executable instructions that when executed by the processor cause the processor to monitor the at least one sensor over a predetermined time period and determine a rate of change of the measured parameter.

20 Claims, 61 Drawing Sheets

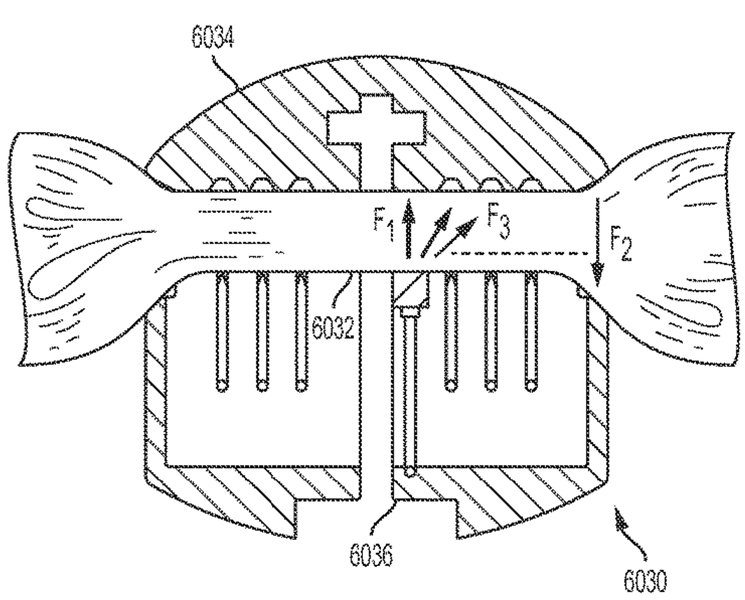

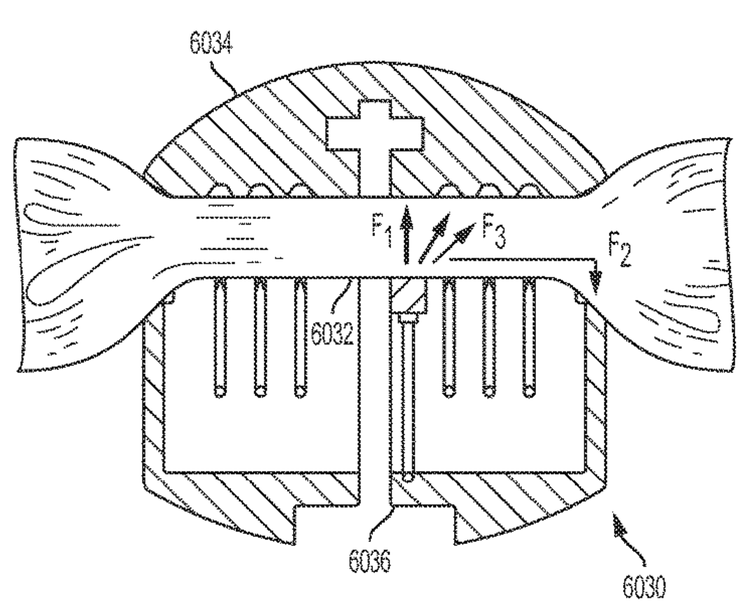

(51) **Int. Cl.**

A61B 5/00	(2006.01)
A61B 17/072	(2006.01)
A61B 17/295	(2006.01)
A61B 18/14	(2006.01)
A61B 17/10	(2006.01)
A61B 17/3209	(2006.01)
A61B 90/00	(2016.01)
A61B 17/00	(2006.01)
A61B 17/29	(2006.01)
A61B 18/00	(2006.01)

(52) **U.S. Cl.**

CPC *A61B 2017/00123* (2013.01); *A61B 2017/00353* (2013.01); *A61B 2017/00398* (2013.01); *A61B 2017/00477* (2013.01); *A61B 2017/00734* (2013.01); *A61B 2017/00876* (2013.01); *A61B 2017/2927* (2013.01); *A61B 2018/0063* (2013.01); *A61B 2018/00875* (2013.01); *A61B 2018/1455* (2013.01); *A61B 2090/061* (2016.02); *A61B 2090/064* (2016.02); *A61B 2090/065* (2016.02); *A61B 2090/0803* (2016.02); *A61B 2090/0811* (2016.02); *A61B 2560/0468* (2013.01); *A61B 2560/0475* (2013.01); *A61B 2562/0223* (2013.01); *A61B 2562/0247* (2013.01); *A61B 2562/0261* (2013.01)

(56) **References Cited**

U.S. PATENT DOCUMENTS

670,748	A	3/1901	Weddeler
951,393	A	3/1910	Hahn
1,306,107	A	6/1919	Elliott
1,314,601	A	9/1919	McCaskey
1,677,337	A	7/1928	Grove
1,794,907	A	3/1931	Kelly
2,037,727	A	4/1936	La Chapelle
2,132,295	A	10/1938	Hawkins
2,161,632	A	6/1939	Nattenheimer
2,211,117	A	8/1940	Hess
2,214,870	A	9/1940	West
2,318,379	A	5/1943	Davis et al.
2,329,440	A	9/1943	La Place
2,441,096	A	5/1948	Happe
2,448,741	A	9/1948	Scott et al.
2,450,527	A	10/1948	Smith et al.
2,526,902	A	10/1950	Rublee
2,527,256	A	10/1950	Jackson
2,578,686	A	12/1951	Fish
2,674,149	A	4/1954	Benson
2,711,461	A	6/1955	Happe
2,804,848	A	9/1957	O'Farrell et al.
2,808,482	A	10/1957	Zanichkowsky et al.
2,853,074	A	9/1958	Olson
2,887,004	A	5/1959	Stewart
2,959,974	A	11/1960	Emrick
3,032,769	A	5/1962	Palmer
3,075,062	A	1/1963	Iaccarino
3,078,465	A	2/1963	Bobrov
3,079,606	A	3/1963	Bobrov et al.
3,166,072	A	1/1965	Sullivan, Jr.
3,196,869	A	7/1965	Scholl
3,204,731	A	9/1965	Bent et al.
3,266,494	A	8/1966	Brownrigg et al.
3,269,630	A	8/1966	Fleischer
3,275,211	A	9/1966	Hirsch et al.
3,317,103	A	5/1967	Cullen et al.
3,317,105	A	5/1967	Astafjev et al.
3,357,296	A	12/1967	Lefever
3,490,675	A	1/1970	Green et al.
3,494,533	A	2/1970	Green et al.
3,499,591	A	3/1970	Green
3,503,396	A	3/1970	Pierie et al.
3,551,987	A	1/1971	Wilkinson
3,568,675	A	3/1971	Harvey
3,572,159	A	3/1971	Tschanz
3,583,393	A	6/1971	Takahashi
3,598,943	A	8/1971	Barrett
3,608,549	A	9/1971	Merrill
3,640,317	A	2/1972	Panfili
3,643,851	A	2/1972	Green et al.
3,661,666	A	5/1972	Foster et al.
3,662,939	A	5/1972	Bryan
3,695,646	A	10/1972	Mommsen
3,709,221	A	1/1973	Riely
3,717,294	A	2/1973	Green
3,734,207	A	5/1973	Fishbein
3,740,994	A	6/1973	DeCarlo, Jr.
3,744,495	A	7/1973	Johnson
3,746,002	A	7/1973	Haller
3,751,902	A	8/1973	Kingsbury et al.
3,799,151	A	3/1974	Fukaumi et al.
3,819,100	A	6/1974	Noiles et al.
3,821,919	A	7/1974	Knohl
3,841,474	A	10/1974	Maier
3,851,196	A	11/1974	Hinds
3,885,491	A	5/1975	Curtis
3,892,228	A	7/1975	Mitsui
3,894,174	A	7/1975	Cartun
3,940,844	A	3/1976	Colby et al.
3,950,686	A	4/1976	Randall
3,955,581	A	5/1976	Spasiano et al.
RE28,932	E	8/1976	Noiles et al.
3,981,051	A	9/1976	Brumlik
4,054,108	A	10/1977	Gill
4,060,089	A	11/1977	Noiles
4,106,446	A	8/1978	Yamada et al.
4,111,206	A	9/1978	Vishnevsky et al.
4,129,059	A	12/1978	Van Eck
4,169,990	A	10/1979	Lerdman
4,180,285	A	12/1979	Reneau
4,198,734	A	4/1980	Brumlik
4,198,982	A	4/1980	Fortner et al.
4,207,898	A	6/1980	Becht
4,213,562	A	7/1980	Garrett et al.
4,226,242	A	10/1980	Jarvik
4,244,372	A	1/1981	Kapitanov et al.
4,250,436	A	2/1981	Weissman
4,261,244	A	4/1981	Becht et al.
4,272,002	A	6/1981	Moshofsky
4,272,662	A	6/1981	Simpson
4,274,304	A	6/1981	Curtiss
4,275,813	A	6/1981	Noiles
4,289,133	A	9/1981	Rothfuss
4,296,654	A	10/1981	Mercer
4,304,236	A	12/1981	Conta et al.
4,305,539	A	12/1981	Korolkov et al.
4,312,685	A	1/1982	Riedl
4,317,451	A	3/1982	Cerwin et al.
4,321,002	A	3/1982	Froehlich
4,328,839	A	5/1982	Lyons et al.
4,331,277	A	5/1982	Green
4,340,331	A	7/1982	Savino
4,347,450	A	8/1982	Colligan
4,349,028	A	9/1982	Green
4,353,371	A	10/1982	Cosman
4,373,147	A	2/1983	Carlson, Jr.
4,379,457	A	4/1983	Gravener et al.
4,380,312	A	4/1983	Landrus
4,382,326	A	5/1983	Rabuse
4,383,634	A	5/1983	Green
4,393,728	A	7/1983	Larson et al.
4,396,139	A	8/1983	Hall et al.
4,397,311	A	8/1983	Kanshin et al.
4,402,445	A	9/1983	Green
4,408,692	A	10/1983	Siegel et al.
4,409,057	A	10/1983	Molenda et al.
4,415,112	A	11/1983	Green
4,416,276	A	11/1983	Newton et al.
4,428,376	A	1/1984	Mericle
4,429,695	A	2/1984	Green

(56) **References Cited**

U.S. PATENT DOCUMENTS

4,434,796 A 3/1984 Karapetian et al.
4,438,659 A 3/1984 Desplats
4,442,964 A 4/1984 Becht
4,448,194 A 5/1984 DiGiovanni et al.
4,451,743 A 5/1984 Suzuki et al.
4,454,887 A 6/1984 Krüger
4,467,805 A 8/1984 Fukuda
4,470,414 A 9/1984 Imagawa et al.
4,473,077 A 9/1984 Noiles et al.
4,475,679 A 10/1984 Fleury, Jr.
4,485,816 A 12/1984 Krumme
4,485,817 A 12/1984 Swiggett
4,486,928 A 12/1984 Tucker et al.
4,488,523 A 12/1984 Shichman
4,489,875 A 12/1984 Crawford et al.
4,499,895 A 2/1985 Takayama
4,500,024 A 2/1985 DiGiovanni et al.
4,505,272 A 3/1985 Utyamyshev et al.
4,505,273 A 3/1985 Braun et al.
4,505,414 A 3/1985 Filipi
4,506,671 A 3/1985 Green
4,512,038 A 4/1985 Alexander et al.
4,520,817 A 6/1985 Green
4,522,327 A 6/1985 Korthoff et al.
4,526,174 A 7/1985 Froehlich
4,527,724 A 7/1985 Chow et al.
4,530,453 A 7/1985 Green
4,531,522 A 7/1985 Bedi et al.
4,532,927 A 8/1985 Miksza, Jr.
4,548,202 A 10/1985 Duncan
4,565,109 A 1/1986 Tsay
4,565,189 A 1/1986 Mabuchi
4,566,620 A 1/1986 Green et al.
4,569,469 A 2/1986 Mongeon et al.
4,571,213 A 2/1986 Ishimoto
4,573,468 A 3/1986 Conta et al.
4,573,469 A 3/1986 Golden et al.
4,573,622 A 3/1986 Green et al.
4,576,167 A 3/1986 Noiles et al.
4,580,712 A 4/1986 Green
4,585,153 A 4/1986 Failla et al.
4,589,416 A 5/1986 Green
4,591,085 A 5/1986 Di Giovanni
4,597,753 A 7/1986 Turley
4,600,037 A 7/1986 Hatten
4,604,786 A 8/1986 Howie, Jr.
4,605,001 A 8/1986 Rothfuss et al.
4,605,004 A 8/1986 Di Giovanni et al.
4,606,343 A 8/1986 Conta et al.
4,607,638 A 8/1986 Crainich
4,608,981 A 9/1986 Rothfuss et al.
4,610,250 A 9/1986 Green
4,610,383 A 9/1986 Rothfuss et al.
4,619,262 A 10/1986 Taylor
4,619,391 A 10/1986 Sharkany et al.
4,628,459 A 12/1986 Shinohara et al.
4,629,107 A 12/1986 Fedotov et al.
4,632,290 A 12/1986 Green et al.
4,633,874 A 1/1987 Chow et al.
4,634,419 A 1/1987 Kreizman et al.
4,641,076 A 2/1987 Linden
4,643,731 A 2/1987 Eckenhoff
4,646,722 A 3/1987 Silverstein et al.
4,655,222 A 4/1987 Florez et al.
4,662,555 A 5/1987 Thornton
4,663,874 A 5/1987 Sano et al.
4,664,305 A 5/1987 Blake, III et al.
4,665,916 A 5/1987 Green
4,667,674 A 5/1987 Korthoff et al.
4,669,647 A 6/1987 Storace
4,671,445 A 6/1987 Barker et al.
4,676,245 A 6/1987 Fukuda
4,684,051 A 8/1987 Akopov et al.
4,691,703 A 9/1987 Auth et al.
4,693,248 A 9/1987 Failla
4,700,703 A 10/1987 Resnick et al.
4,708,141 A 11/1987 Inoue et al.
4,709,120 A 11/1987 Pearson
4,715,520 A 12/1987 Roehr, Jr. et al.
4,719,917 A 1/1988 Barrows et al.
4,727,308 A 2/1988 Huljak et al.
4,728,020 A 3/1988 Green et al.
4,728,876 A 3/1988 Mongeon et al.
4,729,260 A 3/1988 Dudden
4,730,726 A 3/1988 Holzwarth
4,741,336 A 5/1988 Failla et al.
4,743,214 A 5/1988 Tai-Cheng
4,747,820 A 5/1988 Hornlein et al.
4,750,902 A 6/1988 Wuchinich et al.
4,752,024 A 6/1988 Green et al.
4,754,909 A 7/1988 Barker et al.
4,767,044 A 8/1988 Green
4,773,420 A 9/1988 Green
4,777,780 A 10/1988 Holzwarth
4,787,387 A 11/1988 Burbank, III et al.
4,790,225 A 12/1988 Moody et al.
4,805,617 A 2/1989 Bedi et al.
4,805,823 A 2/1989 Rothfuss
4,809,695 A 3/1989 Gwathmey et al.
4,815,460 A 3/1989 Porat et al.
4,817,847 A 4/1989 Redtenbacher et al.
4,819,853 A 4/1989 Green
4,821,939 A 4/1989 Green
4,827,911 A 5/1989 Broadwin et al.
4,830,855 A 5/1989 Stewart
4,834,720 A 5/1989 Blinkhorn
4,844,068 A 7/1989 Arata et al.
4,848,637 A 7/1989 Pruitt
4,856,078 A 8/1989 Konopka
4,865,030 A 9/1989 Polyak
4,868,530 A 9/1989 Ahs
4,869,414 A 9/1989 Green et al.
4,869,415 A 9/1989 Fox
4,873,977 A 10/1989 Avant et al.
4,875,486 A 10/1989 Rapoport et al.
4,880,015 A 11/1989 Nierman
4,890,613 A 1/1990 Golden et al.
4,892,244 A 1/1990 Fox et al.
4,893,622 A 1/1990 Green et al.
4,896,678 A 1/1990 Ogawa
4,900,303 A 2/1990 Lemelson
4,903,697 A 2/1990 Resnick et al.
4,915,100 A 4/1990 Green
4,930,503 A 6/1990 Pruitt
4,930,674 A 6/1990 Barak
4,931,047 A 6/1990 Broadwin et al.
4,932,960 A 6/1990 Green et al.
4,933,843 A 6/1990 Scheller et al.
4,938,408 A 7/1990 Bedi et al.
4,941,623 A 7/1990 Pruitt
4,943,182 A 7/1990 Hoblingre
4,944,443 A 7/1990 Oddsen et al.
4,951,860 A 8/1990 Peters et al.
4,955,959 A 9/1990 Tompkins et al.
4,965,709 A 10/1990 Ngo
4,973,274 A 11/1990 Hirukawa
4,978,049 A 12/1990 Green
4,978,333 A 12/1990 Broadwin et al.
4,986,808 A 1/1991 Broadwin et al.
4,988,334 A 1/1991 Hornlein et al.
5,002,543 A 3/1991 Bradshaw et al.
5,002,553 A 3/1991 Shiber
5,005,754 A 4/1991 Van Overloop
5,009,661 A 4/1991 Michelson
5,014,899 A 5/1991 Presty et al.
5,015,227 A 5/1991 Broadwin et al.
5,018,515 A 5/1991 Gilman
5,018,657 A 5/1991 Pedlick et al.
5,024,671 A 6/1991 Tu et al.
5,027,834 A 7/1991 Pruitt
5,031,814 A 7/1991 Tompkins et al.
5,035,040 A 7/1991 Kerrigan et al.
5,038,109 A 8/1991 Goble et al.
5,040,715 A 8/1991 Green et al.

(56) **References Cited**

U.S. PATENT DOCUMENTS

5,042,707 A 8/1991 Taheri
5,061,269 A 10/1991 Muller
5,062,563 A 11/1991 Green et al.
5,065,929 A 11/1991 Schulze et al.
5,071,052 A 12/1991 Rodak et al.
5,071,430 A 12/1991 de Salis et al.
5,074,454 A 12/1991 Peters
5,079,006 A 1/1992 Urquhart
5,080,556 A 1/1992 Carreno
5,083,695 A 1/1992 Foslien et al.
5,084,057 A 1/1992 Green et al.
5,088,979 A 2/1992 Filipi et al.
5,088,997 A 2/1992 Delahuerga et al.
5,094,247 A 3/1992 Hernandez et al.
5,100,420 A 3/1992 Green et al.
5,104,025 A 4/1992 Main et al.
5,104,397 A 4/1992 Vasconcelos et al.
5,106,008 A 4/1992 Tompkins et al.
5,108,368 A 4/1992 Hammerslag et al.
5,111,987 A 5/1992 Moeinzadeh et al.
5,116,349 A 5/1992 Aranyi
5,122,156 A 6/1992 Granger et al.
5,124,990 A 6/1992 Williamson
5,129,570 A 7/1992 Schulze et al.
5,137,198 A 8/1992 Nobis et al.
5,139,513 A 8/1992 Segato
5,141,144 A 8/1992 Foslien et al.
5,142,932 A 9/1992 Moya et al.
5,155,941 A 10/1992 Takahashi et al.
5,156,315 A 10/1992 Green et al.
5,156,609 A 10/1992 Nakao et al.
5,156,614 A 10/1992 Green et al.
5,158,567 A 10/1992 Green
D330,699 S 11/1992 Gill
5,163,598 A 11/1992 Peters et al.
5,171,247 A 12/1992 Hughett et al.
5,171,249 A 12/1992 Stefanchik et al.
5,171,253 A 12/1992 Klieman et al.
5,188,111 A 2/1993 Yates et al.
5,190,517 A 3/1993 Zieve et al.
5,190,544 A 3/1993 Chapman et al.
5,190,560 A 3/1993 Woods et al.
5,192,288 A 3/1993 Thompson et al.
5,195,968 A 3/1993 Lundquist et al.
5,197,648 A 3/1993 Gingold
5,197,649 A 3/1993 Bessler et al.
5,197,966 A 3/1993 Sommerkamp
5,200,280 A 4/1993 Karasa
5,205,459 A 4/1993 Brinkerhoff et al.
5,207,697 A 5/1993 Carusillo et al.
5,209,747 A 5/1993 Knoepfler
5,211,649 A 5/1993 Kohler et al.
5,211,655 A 5/1993 Hasson
5,217,457 A 6/1993 Delahuerga et al.
5,217,478 A 6/1993 Rexroth
5,219,111 A 6/1993 Bilotti et al.
5,221,036 A 6/1993 Takase
5,221,281 A 6/1993 Klicek
5,222,963 A 6/1993 Brinkerhoff et al.
5,222,975 A 6/1993 Crainich
5,222,976 A 6/1993 Yoon
5,223,675 A 6/1993 Taft
5,234,447 A 8/1993 Kaster et al.
5,236,440 A 8/1993 Hlavacek
5,239,981 A 8/1993 Anapliotis
5,240,163 A 8/1993 Stein et al.
5,242,457 A 9/1993 Akopov et al.
5,244,462 A 9/1993 Delahuerga et al.
5,246,156 A 9/1993 Rothfuss et al.
5,246,443 A 9/1993 Mai
5,253,793 A 10/1993 Green et al.
5,258,009 A 11/1993 Conners
5,258,012 A 11/1993 Luscombe et al.
5,259,366 A 11/1993 Reydel et al.
5,259,835 A 11/1993 Clark et al.
5,260,637 A 11/1993 Pizzi
5,263,629 A 11/1993 Trumbull et al.
5,263,973 A 11/1993 Cook
5,264,218 A 11/1993 Rogozinski
5,268,622 A 12/1993 Philipp
5,271,543 A 12/1993 Grant et al.
5,271,544 A 12/1993 Fox et al.
RE34,519 E 1/1994 Fox et al.
5,275,323 A 1/1994 Schulze et al.
5,275,608 A 1/1994 Forman et al.
5,279,416 A 1/1994 Malec et al.
5,281,216 A 1/1994 Klicek
5,282,806 A 2/1994 Haber et al.
5,282,829 A 2/1994 Hermes
5,284,128 A 2/1994 Hart
5,285,381 A 2/1994 Iskarous et al.
5,285,945 A 2/1994 Brinkerhoff et al.
5,289,963 A 3/1994 McGarry et al.
5,290,271 A 3/1994 Jernberg
5,292,053 A 3/1994 Bilotti et al.
5,297,714 A 3/1994 Kramer
5,304,204 A 4/1994 Bregen
5,307,976 A 5/1994 Olson et al.
5,309,387 A 5/1994 Mori et al.
5,309,927 A 5/1994 Welch
5,312,023 A 5/1994 Green et al.
5,312,024 A 5/1994 Grant et al.
5,312,329 A 5/1994 Beaty et al.
5,314,424 A 5/1994 Nicholas
5,314,445 A 5/1994 Heidmueller née Degwitz et al.
5,314,466 A 5/1994 Stern et al.
5,318,221 A 6/1994 Green et al.
5,330,487 A 7/1994 Thornton et al.
5,330,502 A 7/1994 Hassler et al.
5,332,142 A 7/1994 Robinson et al.
5,333,422 A 8/1994 Warren et al.
5,333,772 A 8/1994 Rothfuss et al.
5,333,773 A 8/1994 Main et al.
5,334,183 A 8/1994 Wuchinich
5,336,232 A 8/1994 Green et al.
5,339,799 A 8/1994 Kami et al.
5,341,724 A 8/1994 Vatel
5,341,810 A 8/1994 Dardel
5,342,381 A 8/1994 Tidemand
5,342,395 A 8/1994 Jarrett et al.
5,342,396 A 8/1994 Cook
5,343,391 A 8/1994 Mushabac
5,344,060 A 9/1994 Gravener et al.
5,344,454 A 9/1994 Clarke et al.
5,346,504 A 9/1994 Ortiz et al.
5,348,259 A 9/1994 Blanco et al.
5,350,388 A 9/1994 Epstein
5,350,391 A 9/1994 Iacovelli
5,350,400 A 9/1994 Esposito et al.
5,352,229 A 10/1994 Goble et al.
5,352,235 A 10/1994 Koros et al.
5,352,238 A 10/1994 Green et al.
5,354,303 A 10/1994 Spaeth et al.
5,356,006 A 10/1994 Alpern et al.
5,358,506 A 10/1994 Green et al.
5,358,510 A 10/1994 Luscombe et al.
5,359,231 A 10/1994 Flowers et al.
D352,780 S 11/1994 Glaeser et al.
5,360,305 A 11/1994 Kerrigan
5,360,428 A 11/1994 Hutchinson, Jr.
5,364,001 A 11/1994 Bryan
5,364,003 A 11/1994 Williamson, IV
5,366,133 A 11/1994 Geiste
5,366,134 A 11/1994 Green et al.
5,366,479 A 11/1994 McGarry et al.
5,368,015 A 11/1994 Wilk
5,368,592 A 11/1994 Stern et al.
5,370,645 A * 12/1994 Klicek A61B 18/1206
606/34
5,372,124 A 12/1994 Takayama et al.
5,372,596 A 12/1994 Klicek et al.
5,372,602 A 12/1994 Burke
5,374,277 A 12/1994 Hassler
5,376,095 A 12/1994 Ortiz

(56) **References Cited**

U.S. PATENT DOCUMENTS

5,379,933 A 1/1995 Green et al.
5,381,649 A 1/1995 Webb
5,381,782 A 1/1995 DeLaRama et al.
5,382,247 A 1/1995 Cimino et al.
5,383,880 A 1/1995 Hooven
5,383,881 A 1/1995 Green et al.
5,383,888 A 1/1995 Zvenyatsky et al.
5,383,895 A 1/1995 Holmes et al.
5,389,098 A 2/1995 Tsuruta et al.
5,389,104 A 2/1995 Hahnen et al.
5,391,180 A 2/1995 Tovey et al.
5,392,979 A 2/1995 Green et al.
5,395,030 A 3/1995 Kuramoto et al.
5,395,033 A 3/1995 Byrne et al.
5,395,034 A 3/1995 Allen et al.
5,395,312 A 3/1995 Desai
5,395,384 A 3/1995 Duthoit
5,397,046 A 3/1995 Savage et al.
5,397,324 A 3/1995 Carroll et al.
5,403,312 A 4/1995 Yates et al.
5,405,072 A 4/1995 Zlock et al.
5,405,073 A 4/1995 Porter
5,405,344 A 4/1995 Williamson et al.
5,405,360 A 4/1995 Tovey
5,407,293 A 4/1995 Crainich
5,408,409 A 4/1995 Glassman
5,409,498 A 4/1995 Braddock et al.
5,411,481 A 5/1995 Allen et al.
5,411,508 A 5/1995 Bessler et al.
5,413,107 A 5/1995 Oakley et al.
5,413,267 A 5/1995 Solyntjes et al.
5,413,268 A 5/1995 Green et al.
5,413,272 A 5/1995 Green et al.
5,413,573 A 5/1995 Koivukangas
5,415,334 A 5/1995 Williamson, IV et al.
5,415,335 A 5/1995 Knodell, Jr.
5,417,203 A 5/1995 Tovey et al.
5,417,361 A 5/1995 Williamson, IV
5,421,829 A 6/1995 Olichney et al.
5,422,567 A 6/1995 Matsunaga
5,423,471 A 6/1995 Mastri et al.
5,423,809 A 6/1995 Klicek
5,425,745 A 6/1995 Green et al.
5,431,322 A 7/1995 Green et al.
5,431,654 A 7/1995 Nic
5,431,668 A 7/1995 Burbank, III et al.
5,433,721 A 7/1995 Hooven et al.
5,437,681 A 8/1995 Meade et al.
5,438,302 A 8/1995 Goble
5,439,155 A 8/1995 Viola
5,439,156 A 8/1995 Grant et al.
5,439,479 A 8/1995 Schichman et al.
5,441,191 A 8/1995 Linden
5,441,193 A 8/1995 Gravener
5,441,483 A 8/1995 Avitall
5,441,494 A 8/1995 Ortiz
5,444,113 A 8/1995 Sinclair et al.
5,445,155 A 8/1995 Sieben
5,445,304 A 8/1995 Plyley et al.
5,445,644 A 8/1995 Pietrafitta et al.
5,447,265 A 9/1995 Vidal et al.
5,447,417 A 9/1995 Kuhl et al.
5,447,513 A 9/1995 Davison et al.
5,449,355 A 9/1995 Rhum et al.
5,449,365 A 9/1995 Green et al.
5,449,370 A 9/1995 Vaitekunas
5,452,836 A 9/1995 Huitema et al.
5,452,837 A 9/1995 Williamson, IV et al.
5,454,378 A 10/1995 Palmer et al.
5,454,827 A 10/1995 Aust et al.
5,456,401 A 10/1995 Green et al.
5,458,579 A 10/1995 Chodorow et al.
5,462,215 A 10/1995 Viola et al.
5,464,013 A 11/1995 Lemelson
5,464,144 A 11/1995 Guy et al.
5,464,300 A 11/1995 Crainich
5,465,894 A 11/1995 Clark et al.
5,465,895 A 11/1995 Knodel et al.
5,465,896 A 11/1995 Allen et al.
5,466,020 A 11/1995 Page et al.
5,467,911 A 11/1995 Tsuruta et al.
5,468,253 A 11/1995 Bezwada et al.
5,470,006 A 11/1995 Rodak
5,470,007 A 11/1995 Plyley et al.
5,470,009 A 11/1995 Rodak
5,470,010 A 11/1995 Rothfuss et al.
5,472,132 A 12/1995 Savage et al.
5,472,442 A 12/1995 Klicek
5,473,204 A 12/1995 Temple
5,474,057 A 12/1995 Makower et al.
5,474,223 A 12/1995 Viola et al.
5,474,566 A 12/1995 Alesi et al.
5,476,206 A 12/1995 Green et al.
5,476,479 A 12/1995 Green et al.
5,478,003 A 12/1995 Green et al.
5,478,354 A 12/1995 Tovey et al.
5,480,089 A 1/1996 Blewett
5,480,409 A 1/1996 Riza
5,482,197 A 1/1996 Green et al.
5,484,095 A 1/1996 Green et al.
5,484,398 A 1/1996 Stoddard
5,484,451 A 1/1996 Akopov et al.
5,485,947 A 1/1996 Olson et al.
5,485,952 A 1/1996 Fontayne
5,487,499 A 1/1996 Sorrentino et al.
5,487,500 A 1/1996 Knodel et al.
5,489,058 A 2/1996 Plyley et al.
5,489,256 A 2/1996 Adair
5,496,312 A 3/1996 Klicek
5,496,317 A 3/1996 Goble et al.
5,497,933 A 3/1996 DeFonzo et al.
5,501,654 A 3/1996 Failla et al.
5,503,320 A 4/1996 Webster et al.
5,503,635 A 4/1996 Sauer et al.
5,503,638 A 4/1996 Cooper et al.
5,505,363 A 4/1996 Green et al.
5,507,426 A 4/1996 Young et al.
5,509,596 A 4/1996 Green et al.
5,509,916 A 4/1996 Taylor
5,511,564 A 4/1996 Wilk
5,514,129 A 5/1996 Smith
5,514,157 A 5/1996 Nicholas et al.
5,518,163 A 5/1996 Hooven
5,518,164 A 5/1996 Hooven
5,520,678 A 5/1996 Heckele et al.
5,520,700 A 5/1996 Beyar et al.
5,522,817 A 6/1996 Sander et al.
5,522,831 A 6/1996 Sleister et al.
5,527,320 A 6/1996 Carruthers et al.
5,529,235 A 6/1996 Boiarski et al.
D372,086 S 7/1996 Grasso et al.
5,531,305 A 7/1996 Roberts et al.
5,531,744 A 7/1996 Nardella et al.
5,533,521 A 7/1996 Granger
5,533,581 A 7/1996 Barth et al.
5,533,661 A 7/1996 Main et al.
5,535,934 A 7/1996 Boiarski et al.
5,535,935 A 7/1996 Vidal et al.
5,535,937 A 7/1996 Boiarski et al.
5,540,375 A 7/1996 Bolanos et al.
5,541,376 A 7/1996 Ladtkow et al.
5,542,594 A 8/1996 McKean et al.
5,542,949 A 8/1996 Yoon
5,543,119 A 8/1996 Sutter et al.
5,547,117 A 8/1996 Hamblin et al.
5,549,583 A 8/1996 Sanford et al.
5,549,621 A 8/1996 Bessler et al.
5,549,627 A 8/1996 Kieturakis
5,549,628 A 8/1996 Cooper et al.
5,549,637 A 8/1996 Crainich
5,551,622 A 9/1996 Yoon
5,553,675 A 9/1996 Pitzen et al.
5,553,765 A 9/1996 Knodel et al.
5,554,148 A 9/1996 Aebischer et al.

(56) **References Cited**

U.S. PATENT DOCUMENTS

5,554,169 A 9/1996 Green et al.
5,556,416 A 9/1996 Clark et al.
5,558,665 A 9/1996 Kieturakis
5,558,671 A 9/1996 Yates
5,560,530 A 10/1996 Bolanos et al.
5,560,532 A 10/1996 DeFonzo et al.
5,561,881 A 10/1996 Klinger et al.
5,562,239 A 10/1996 Boiarski et al.
5,562,241 A 10/1996 Knodel et al.
5,562,682 A 10/1996 Oberlin et al.
5,562,690 A 10/1996 Green et al.
5,562,701 A 10/1996 Huitema et al.
5,562,702 A 10/1996 Huitema et al.
5,563,481 A 10/1996 Krause
5,564,615 A 10/1996 Bishop et al.
5,569,161 A 10/1996 Ebling et al.
5,569,270 A 10/1996 Weng
5,569,284 A 10/1996 Young et al.
5,571,090 A 11/1996 Sherts
5,571,100 A 11/1996 Goble et al.
5,571,116 A 11/1996 Bolanos et al.
5,571,285 A 11/1996 Chow et al.
5,571,488 A 11/1996 Beerstecher et al.
5,573,543 A 11/1996 Akopov et al.
5,574,431 A 11/1996 McKeown et al.
5,575,054 A 11/1996 Klinzing et al.
5,575,789 A 11/1996 Bell et al.
5,575,799 A 11/1996 Bolanos et al.
5,575,803 A 11/1996 Cooper et al.
5,575,805 A 11/1996 Li
5,577,654 A 11/1996 Bishop
5,579,978 A 12/1996 Green et al.
5,580,067 A 12/1996 Hamblin et al.
5,582,611 A 12/1996 Tsuruta et al.
5,582,617 A 12/1996 Klieman et al.
5,584,425 A 12/1996 Savage et al.
5,586,711 A 12/1996 Plyley et al.
5,588,579 A 12/1996 Schnut et al.
5,588,580 A 12/1996 Paul et al.
5,588,581 A 12/1996 Conlon et al.
5,591,170 A 1/1997 Spievack et al.
5,591,187 A 1/1997 Dekel
5,597,107 A 1/1997 Knodel et al.
5,599,151 A 2/1997 Daum et al.
5,599,279 A 2/1997 Slotman et al.
5,599,344 A 2/1997 Paterson
5,599,350 A 2/1997 Schulze et al.
5,599,852 A 2/1997 Scopelianos et al.
5,601,224 A 2/1997 Bishop et al.
5,601,573 A 2/1997 Fogelberg et al.
5,603,443 A 2/1997 Clark et al.
5,605,272 A 2/1997 Witt et al.
5,605,273 A 2/1997 Hamblin et al.
5,607,094 A 3/1997 Clark et al.
5,607,095 A 3/1997 Smith et al.
5,607,433 A 3/1997 Polla et al.
5,607,450 A 3/1997 Zvenyatsky et al.
5,609,285 A 3/1997 Grant et al.
5,609,601 A 3/1997 Kolesa et al.
5,611,709 A 3/1997 McAnulty
5,613,966 A 3/1997 Makower et al.
5,615,820 A 4/1997 Viola
5,618,294 A 4/1997 Aust et al.
5,618,303 A 4/1997 Marlow et al.
5,618,307 A 4/1997 Donlon et al.
5,619,992 A 4/1997 Guthrie et al.
5,620,289 A 4/1997 Curry
5,620,452 A 4/1997 Yoon
5,624,398 A 4/1997 Smith et al.
5,624,452 A 4/1997 Yates
5,626,587 A 5/1997 Bishop et al.
5,626,595 A 5/1997 Sklar et al.
5,628,446 A 5/1997 Geiste et al.
5,628,743 A 5/1997 Cimino
5,628,745 A 5/1997 Bek
5,630,539 A 5/1997 Plyley et al.
5,630,540 A 5/1997 Blewett
5,630,541 A 5/1997 Williamson, IV et al.
5,630,782 A 5/1997 Adair
5,632,432 A 5/1997 Schulze et al.
5,632,433 A 5/1997 Grant et al.
5,634,584 A 6/1997 Okorocha et al.
5,636,779 A 6/1997 Palmer
5,636,780 A 6/1997 Green et al.
5,639,008 A 6/1997 Gallagher et al.
5,643,291 A 7/1997 Pier et al.
5,645,209 A 7/1997 Green et al.
5,647,526 A 7/1997 Green et al.
5,647,869 A 7/1997 Goble et al.
5,649,937 A 7/1997 Bito et al.
5,649,956 A 7/1997 Jensen et al.
5,651,491 A 7/1997 Heaton et al.
5,653,373 A 8/1997 Green et al.
5,653,374 A 8/1997 Young et al.
5,653,677 A 8/1997 Okada et al.
5,653,721 A 8/1997 Knodel et al.
5,655,698 A 8/1997 Yoon
5,657,429 A 8/1997 Wang et al.
5,657,921 A 8/1997 Young et al.
5,658,238 A 8/1997 Suzuki et al.
5,658,281 A 8/1997 Heard
5,658,300 A 8/1997 Bito et al.
5,658,307 A 8/1997 Exconde
5,662,258 A 9/1997 Knodel et al.
5,662,260 A 9/1997 Yoon
5,662,662 A 9/1997 Bishop et al.
5,665,085 A 9/1997 Nardella
5,667,517 A 9/1997 Hooven
5,667,526 A 9/1997 Levin
5,667,527 A 9/1997 Cook
5,669,544 A 9/1997 Schulze et al.
5,669,904 A 9/1997 Platt, Jr. et al.
5,669,907 A 9/1997 Platt, Jr. et al.
5,669,918 A 9/1997 Balazs et al.
5,673,840 A 10/1997 Schulze et al.
5,673,841 A 10/1997 Schulze et al.
5,673,842 A 10/1997 Bittner et al.
5,674,286 A 10/1997 D'Alessio et al.
5,678,748 A 10/1997 Plyley et al.
5,680,981 A 10/1997 Mililli et al.
5,680,982 A 10/1997 Schulze et al.
5,680,983 A 10/1997 Plyley et al.
5,683,349 A 11/1997 Makower et al.
5,685,474 A 11/1997 Seeber
5,686,090 A 11/1997 Schilder et al.
5,688,270 A 11/1997 Yates et al.
5,690,269 A 11/1997 Bolanos et al.
5,692,668 A 12/1997 Schulze et al.
5,693,020 A 12/1997 Rauh
5,693,042 A 12/1997 Boiarski et al.
5,693,051 A 12/1997 Schulze et al.
5,695,494 A 12/1997 Becker
5,695,502 A 12/1997 Pier et al.
5,695,504 A 12/1997 Gifford, III et al.
5,695,524 A 12/1997 Kelley et al.
5,697,542 A 12/1997 Knodel et al.
5,697,543 A 12/1997 Burdorff
5,697,909 A 12/1997 Eggers et al.
5,697,943 A 12/1997 Sauer et al.
5,700,270 A 12/1997 Peyser et al.
5,702,387 A 12/1997 Arts et al.
5,702,408 A 12/1997 Wales et al.
5,702,409 A 12/1997 Rayburn et al.
5,704,087 A 1/1998 Strub
5,704,534 A 1/1998 Huitema et al.
5,706,997 A 1/1998 Green et al.
5,706,998 A 1/1998 Plyley et al.
5,707,392 A 1/1998 Kortenbach
5,709,334 A 1/1998 Sorrentino et al.
5,709,680 A 1/1998 Yates et al.
5,709,706 A 1/1998 Kienzle et al.
5,711,472 A 1/1998 Bryan
5,712,460 A 1/1998 Carr et al.
5,713,128 A 2/1998 Schrenk et al.

(56) **References Cited**

U.S. PATENT DOCUMENTS

5,713,505	A	2/1998	Huitema
5,713,895	A	2/1998	Lontine et al.
5,713,896	A	2/1998	Nardella
5,713,920	A	2/1998	Bezwada et al.
5,715,987	A	2/1998	Kelley et al.
5,715,988	A	2/1998	Palmer
5,716,366	A	2/1998	Yates
5,718,359	A	2/1998	Palmer et al.
5,718,360	A	2/1998	Green et al.
5,718,548	A	2/1998	Costellessa
5,718,714	A	2/1998	Livneh
5,720,744	A	2/1998	Eggleston et al.
D393,067	S	3/1998	Geary et al.
5,725,536	A	3/1998	Oberlin et al.
5,725,554	A	3/1998	Simon et al.
5,728,110	A	3/1998	Vidal et al.
5,728,121	A	3/1998	Bimbo et al.
5,730,758	A	3/1998	Allgeyer
5,732,821	A	3/1998	Stone et al.
5,732,871	A	3/1998	Clark et al.
5,732,872	A	3/1998	Bolduc et al.
5,733,308	A	3/1998	Daugherty et al.
5,735,445	A	4/1998	Vidal et al.
5,735,848	A	4/1998	Yates et al.
5,735,874	A	4/1998	Measamer et al.
5,738,474	A	4/1998	Blewett
5,738,648	A	4/1998	Lands et al.
5,743,456	A	4/1998	Jones et al.
5,747,953	A	5/1998	Philipp
5,749,889	A	5/1998	Bacich et al.
5,749,893	A	5/1998	Vidal et al.
5,752,644	A	5/1998	Bolanos et al.
5,752,965	A	5/1998	Francis et al.
5,755,717	A	5/1998	Yates et al.
5,758,814	A	6/1998	Gallagher et al.
5,762,255	A	6/1998	Chrisman et al.
5,762,256	A	6/1998	Mastri et al.
5,766,188	A	6/1998	Igaki
5,766,205	A	6/1998	Zvenyatsky et al.
5,769,748	A	6/1998	Eyerly et al.
5,769,892	A	6/1998	Kingwell
5,772,379	A	6/1998	Evensen
5,772,578	A	6/1998	Heimberger et al.
5,772,659	A	6/1998	Becker et al.
5,776,130	A	7/1998	Buysse et al.
5,778,939	A	7/1998	Hok-Yin
5,779,130	A	7/1998	Alesi et al.
5,779,131	A	7/1998	Knodel et al.
5,779,132	A	7/1998	Knodel et al.
5,782,396	A	7/1998	Mastri et al.
5,782,397	A	7/1998	Koukline
5,782,749	A	7/1998	Riza
5,782,859	A	7/1998	Nicholas et al.
5,784,934	A	7/1998	Izumisawa
5,785,232	A	7/1998	Vidal et al.
5,785,647	A	7/1998	Tompkins et al.
5,787,897	A	8/1998	Kieturakis
5,792,135	A	8/1998	Madhani et al.
5,792,165	A	8/1998	Klieman et al.
5,794,834	A	8/1998	Hamblin et al.
5,796,188	A	8/1998	Bays
5,797,536	A	8/1998	Smith et al.
5,797,537	A	8/1998	Oberlin et al.
5,797,538	A	8/1998	Heaton et al.
5,797,906	A	8/1998	Rhum et al.
5,797,959	A	8/1998	Castro et al.
5,799,857	A	9/1998	Robertson et al.
5,800,379	A	9/1998	Edwards
5,800,423	A	9/1998	Jensen
5,806,676	A	9/1998	Wasgien
5,807,376	A	9/1998	Viola et al.
5,807,378	A	9/1998	Jensen et al.
5,807,393	A	9/1998	Williamson, IV et al.
5,809,441	A	9/1998	McKee
5,810,721	A	9/1998	Mueller et al.
5,810,811	A	9/1998	Yates et al.
5,810,846	A	9/1998	Virnich et al.
5,810,855	A	9/1998	Rayburn et al.
5,813,813	A	9/1998	Daum et al.
5,814,055	A	9/1998	Knodel et al.
5,814,057	A	9/1998	Oi et al.
5,816,471	A	10/1998	Plyley et al.
5,817,084	A	10/1998	Jensen
5,817,091	A	10/1998	Nardella et al.
5,817,093	A	10/1998	Williamson, IV et al.
5,817,109	A	10/1998	McGarry et al.
5,817,119	A	10/1998	Klieman et al.
5,820,009	A	10/1998	Melling et al.
5,823,066	A	10/1998	Huitema et al.
5,824,333	A	10/1998	Scopelianos et al.
5,826,776	A	10/1998	Schulze et al.
5,827,271	A	10/1998	Buysse et al.
5,827,298	A	10/1998	Hart et al.
5,829,662	A	11/1998	Allen et al.
5,833,690	A	11/1998	Yates et al.
5,833,695	A	11/1998	Yoon
5,833,696	A	11/1998	Whitfield et al.
5,836,503	A	11/1998	Ehrenfels et al.
5,836,960	A	11/1998	Kolesa et al.
5,839,639	A	11/1998	Sauer et al.
5,843,021	A	12/1998	Edwards et al.
5,843,096	A	12/1998	Igaki et al.
5,843,097	A	12/1998	Mayenberger et al.
5,843,122	A	12/1998	Riza
5,843,132	A	12/1998	Ilvento
5,843,169	A	12/1998	Taheri
5,846,254	A	12/1998	Schulze et al.
5,849,011	A	12/1998	Jones et al.
5,849,023	A	12/1998	Mericle
5,855,311	A	1/1999	Hamblin et al.
5,855,583	A	1/1999	Wang et al.
5,860,581	A	1/1999	Robertson et al.
5,860,975	A	1/1999	Goble et al.
5,865,361	A	2/1999	Milliman et al.
5,868,760	A	2/1999	McGuckin, Jr.
5,871,135	A	2/1999	Williamson, IV et al.
5,873,885	A	2/1999	Weidenbenner
5,876,401	A	3/1999	Schulze et al.
5,878,193	A	3/1999	Wang et al.
5,878,607	A	3/1999	Nunes et al.
5,878,937	A	3/1999	Green et al.
5,878,938	A	3/1999	Bittner et al.
5,891,160	A	4/1999	Williamson, IV et al.
5,893,506	A	4/1999	Powell
5,893,835	A	4/1999	Witt et al.
5,893,878	A	4/1999	Pierce
5,894,979	A	4/1999	Powell
5,897,552	A	4/1999	Edwards et al.
5,897,562	A	4/1999	Bolanos et al.
5,899,914	A	5/1999	Zirps et al.
5,901,895	A	5/1999	Heaton et al.
5,902,312	A	5/1999	Frater et al.
5,903,117	A	5/1999	Gregory
5,904,647	A	5/1999	Ouchi
5,904,693	A	5/1999	Dicesare et al.
5,904,702	A	5/1999	Ek et al.
5,906,625	A	5/1999	Bito et al.
5,908,402	A	6/1999	Blythe
5,908,427	A	6/1999	McKean et al.
5,911,353	A	6/1999	Bolanos et al.
5,915,616	A	6/1999	Viola et al.
5,916,225	A	6/1999	Kugel
5,918,791	A	7/1999	Sorrentino et al.
5,919,198	A	7/1999	Graves, Jr. et al.
5,921,956	A	7/1999	Grinberg et al.
5,928,256	A	7/1999	Riza
5,931,847	A	8/1999	Bittner et al.
5,931,853	A	8/1999	McEwen et al.
5,937,951	A	8/1999	Izuchukwu et al.
5,938,667	A	8/1999	Peyser et al.
5,941,442	A	8/1999	Geiste et al.
5,941,890	A	8/1999	Voegele et al.
5,944,172	A	8/1999	Hannula
5,944,715	A	8/1999	Goble et al.

(56) **References Cited**

U.S. PATENT DOCUMENTS

5,947,984	A	9/1999	Whipple
5,948,030	A	9/1999	Miller et al.
5,951,516	A	9/1999	Bunyan
5,951,552	A	9/1999	Long et al.
5,951,574	A	9/1999	Stefanchik et al.
5,951,581	A	9/1999	Saadat et al.
5,954,259	A	9/1999	Viola et al.
5,964,394	A	10/1999	Robertson
5,964,774	A	10/1999	McKean et al.
5,971,916	A	10/1999	Koren
5,973,221	A	10/1999	Collyer et al.
5,977,746	A	11/1999	Hershberger et al.
5,984,949	A	11/1999	Levin
5,988,479	A	11/1999	Palmer
5,997,528	A	12/1999	Bisch et al.
5,997,552	A	12/1999	Person et al.
6,001,108	A	12/1999	Wang et al.
6,003,517	A	12/1999	Sheffield et al.
6,004,319	A	12/1999	Goble et al.
6,004,335	A	12/1999	Vaitekunas et al.
6,010,054	A	1/2000	Johnson et al.
6,010,513	A	1/2000	Törmälä et al.
6,012,494	A	1/2000	Balazs
6,013,076	A	1/2000	Goble et al.
6,015,406	A	1/2000	Goble et al.
6,015,417	A	1/2000	Reynolds, Jr.
6,017,322	A	1/2000	Snoke et al.
6,017,354	A	1/2000	Culp et al.
6,017,356	A	1/2000	Frederick et al.
6,018,227	A	1/2000	Kumar et al.
6,022,352	A	2/2000	Vandewalle
6,024,741	A	2/2000	Williamson, IV et al.
6,024,748	A	2/2000	Manzo et al.
6,024,764	A	2/2000	Schroeppel
6,027,501	A	2/2000	Goble et al.
6,032,849	A	3/2000	Mastri et al.
6,033,378	A	3/2000	Lundquist et al.
6,033,399	A	3/2000	Gines
6,033,427	A	3/2000	Lee
6,037,724	A	3/2000	Buss et al.
6,037,927	A	3/2000	Rosenberg
6,039,733	A	3/2000	Buysse et al.
6,039,734	A	3/2000	Goble
6,042,601	A	3/2000	Smith
6,045,560	A	4/2000	McKean et al.
6,047,861	A	4/2000	Vidal et al.
6,049,145	A	4/2000	Austin et al.
6,050,472	A	4/2000	Shibata
6,050,990	A	4/2000	Tankovich et al.
6,050,996	A	4/2000	Schmaltz et al.
6,053,390	A	4/2000	Green et al.
6,053,922	A	4/2000	Krause et al.
RE36,720	E	5/2000	Green et al.
6,056,735	A	5/2000	Okada et al.
6,056,746	A	5/2000	Goble et al.
6,062,360	A	5/2000	Shields
6,063,095	A	5/2000	Wang et al.
6,063,097	A	5/2000	Oi et al.
6,063,098	A	5/2000	Houser et al.
6,065,679	A	5/2000	Levie et al.
6,065,919	A	5/2000	Peck
6,066,132	A	5/2000	Chen et al.
6,068,627	A	5/2000	Orszulak et al.
6,071,233	A	6/2000	Ishikawa et al.
6,074,386	A	6/2000	Goble et al.
6,074,401	A	6/2000	Gardiner et al.
6,077,286	A	6/2000	Cuschieri et al.
6,079,606	A	6/2000	Milliman et al.
6,080,181	A	6/2000	Jensen et al.
6,082,577	A	7/2000	Coates et al.
6,083,191	A	7/2000	Rose
6,083,234	A	7/2000	Nicholas et al.
6,083,242	A	7/2000	Cook
6,086,544	A	7/2000	Hibner et al.
6,086,600	A	7/2000	Kortenbach
6,090,106	A	7/2000	Goble et al.
6,093,186	A	7/2000	Goble
6,099,537	A	8/2000	Sugai et al.
6,099,551	A	8/2000	Gabbay
6,102,271	A	8/2000	Longo et al.
6,104,304	A	8/2000	Clark et al.
6,106,511	A	8/2000	Jensen
6,109,500	A	8/2000	Alli et al.
6,117,148	A	9/2000	Ravo et al.
6,117,158	A	9/2000	Measamer et al.
6,119,913	A	9/2000	Adams et al.
6,120,433	A	9/2000	Mizuno et al.
6,120,462	A	9/2000	Hibner et al.
6,123,241	A	9/2000	Walter et al.
RE1,904	E	10/2000	Yates et al.
6,126,058	A	10/2000	Adams et al.
6,126,359	A	10/2000	Dittrich et al.
6,126,670	A	10/2000	Walker et al.
6,131,789	A	10/2000	Schulze et al.
6,131,790	A	10/2000	Piraka
6,132,368	A	10/2000	Cooper
6,139,546	A	10/2000	Koenig et al.
6,149,660	A	11/2000	Laufer et al.
6,152,935	A	11/2000	Kammerer et al.
6,155,473	A	12/2000	Tompkins et al.
6,156,056	A	12/2000	Kearns et al.
6,159,146	A	12/2000	El Gazayerli
6,159,200	A	12/2000	Verdura et al.
6,159,224	A	12/2000	Yoon
6,162,208	A	12/2000	Hipps
6,162,537	A	12/2000	Martin et al.
6,165,175	A	12/2000	Wampler et al.
6,165,184	A	12/2000	Verdura et al.
6,165,188	A	12/2000	Saadat et al.
6,168,605	B1	1/2001	Measamer et al.
6,171,305	B1	1/2001	Sherman
6,171,316	B1	1/2001	Kovac et al.
6,171,330	B1	1/2001	Benchetrit
6,174,308	B1	1/2001	Goble et al.
6,174,309	B1	1/2001	Wrublewski et al.
6,175,290	B1	1/2001	Forsythe et al.
6,179,195	B1	1/2001	Adams et al.
6,179,776	B1	1/2001	Adams et al.
6,181,105	B1	1/2001	Cutolo et al.
6,182,673	B1	2/2001	Kindermann et al.
6,187,003	B1	2/2001	Buysse et al.
6,190,386	B1	2/2001	Rydell
6,193,129	B1	2/2001	Bittner et al.
6,197,042	B1	3/2001	Ginn et al.
6,200,330	B1	3/2001	Benderev et al.
6,202,914	B1	3/2001	Geiste et al.
6,206,897	B1	3/2001	Jamiolkowski et al.
6,206,904	B1	3/2001	Ouchi
6,210,403	B1	4/2001	Klicek
6,213,999	B1	4/2001	Platt, Jr. et al.
6,214,028	B1	4/2001	Yoon et al.
6,220,368	B1	4/2001	Ark et al.
6,223,100	B1	4/2001	Green
6,223,835	B1	5/2001	Habedank et al.
6,224,617	B1	5/2001	Saadat et al.
6,228,081	B1	5/2001	Goble
6,228,083	B1	5/2001	Lands et al.
6,228,084	B1	5/2001	Kirwan, Jr.
6,231,565	B1	5/2001	Tovey et al.
6,234,178	B1	5/2001	Goble et al.
6,241,139	B1	6/2001	Milliman et al.
6,241,140	B1	6/2001	Adams et al.
6,241,723	B1	6/2001	Heim et al.
6,245,084	B1	6/2001	Mark et al.
6,248,116	B1	6/2001	Chevillon et al.
6,248,117	B1	6/2001	Blatter
6,249,076	B1	6/2001	Madden et al.
6,249,105	B1	6/2001	Andrews et al.
6,250,532	B1	6/2001	Green et al.
6,258,107	B1	7/2001	Balázs et al.
6,261,286	B1	7/2001	Goble et al.
6,264,086	B1	7/2001	McGuckin, Jr.
6,264,087	B1	7/2001	Whitman
6,270,508	B1	8/2001	Klieman et al.

(56) **References Cited**

U.S. PATENT DOCUMENTS

6,273,876	B1	8/2001	Klima et al.
6,273,897	B1	8/2001	Dalessandro et al.
6,277,114	B1	8/2001	Bullivant et al.
6,293,942	B1	9/2001	Goble et al.
6,296,640	B1	10/2001	Wampler et al.
6,302,311	B1	10/2001	Adams et al.
6,305,891	B1	10/2001	Burlingame
6,306,134	B1	10/2001	Goble et al.
6,306,149	B1	10/2001	Meade
6,309,403	B1	10/2001	Minor et al.
6,315,184	B1	11/2001	Whitman
6,320,123	B1	11/2001	Reimers
6,322,494	B1	11/2001	Bullivant et al.
6,324,339	B1	11/2001	Hudson et al.
6,325,799	B1	12/2001	Goble
6,325,810	B1	12/2001	Hamilton et al.
6,330,965	B1	12/2001	Milliman et al.
6,331,181	B1	12/2001	Tierney et al.
6,331,761	B1	12/2001	Kumar et al.
6,333,029	B1	12/2001	Vyakarnam et al.
6,334,860	B1	1/2002	Dorn
6,334,861	B1	1/2002	Chandler et al.
6,336,926	B1	1/2002	Goble
6,338,737	B1	1/2002	Toledano
6,343,731	B1	2/2002	Adams et al.
6,346,077	B1	2/2002	Taylor et al.
6,352,503	B1	3/2002	Matsui et al.
6,352,532	B1	3/2002	Kramer et al.
6,355,699	B1	3/2002	Vyakarnam et al.
6,356,072	B1	3/2002	Chass
6,358,224	B1	3/2002	Tims et al.
6,364,877	B1	4/2002	Goble et al.
6,364,888	B1	4/2002	Niemeyer et al.
6,370,981	B2	4/2002	Watarai
6,373,152	B1	4/2002	Wang et al.
6,383,201	B1	5/2002	Dong
6,387,113	B1	5/2002	Hawkins et al.
6,387,114	B2	5/2002	Adams
6,391,038	B2	5/2002	Vargas et al.
6,392,854	B1	5/2002	O'Gorman
6,398,781	B1	6/2002	Goble et al.
6,398,797	B2	6/2002	Bombard et al.
6,402,766	B2	6/2002	Bowman et al.
6,406,440	B1	6/2002	Stefanchik
6,406,472	B1	6/2002	Jensen
6,409,724	B1	6/2002	Penny et al.
H2037	H	7/2002	Yates et al.
6,413,274	B1	7/2002	Pedros
6,416,486	B1	7/2002	Wampler
6,416,509	B1	7/2002	Goble et al.
6,419,695	B1	7/2002	Gabbay
6,423,079	B1	7/2002	Blake, III
RE37,814	E	8/2002	Allgeyer
6,428,070	B1	8/2002	Takanashi et al.
6,429,611	B1	8/2002	Li
6,430,298	B1	8/2002	Kettl et al.
6,432,065	B1	8/2002	Burdorff et al.
6,436,097	B1	8/2002	Nardella
6,436,107	B1	8/2002	Wang et al.
6,436,110	B2	8/2002	Bowman et al.
6,436,122	B1	8/2002	Frank et al.
6,439,439	B1	8/2002	Rickard et al.
6,439,446	B1	8/2002	Perry et al.
6,440,146	B2	8/2002	Nicholas et al.
6,441,577	B2	8/2002	Blumenkranz et al.
6,443,973	B1	9/2002	Whitman
6,447,518	B1	9/2002	Krause et al.
6,447,864	B2	9/2002	Johnson et al.
6,450,391	B1	9/2002	Kayan et al.
6,450,989	B2	9/2002	Dubrul et al.
6,454,781	B1	9/2002	Witt et al.
6,468,275	B1	10/2002	Wampler et al.
6,471,106	B1	10/2002	Reining
6,471,659	B2	10/2002	Eggers et al.
6,478,210	B2	11/2002	Adams et al.
6,482,200	B2	11/2002	Shippert
6,485,490	B2	11/2002	Wampler et al.
6,485,667	B1	11/2002	Tan
6,488,196	B1	12/2002	Fenton, Jr.
6,488,197	B1	12/2002	Whitman
6,491,201	B1	12/2002	Whitman
6,491,690	B1	12/2002	Goble et al.
6,491,701	B2	12/2002	Tierney et al.
6,492,785	B1	12/2002	Kasten et al.
6,494,896	B1	12/2002	D'Alessio et al.
6,498,480	B1	12/2002	Manara
6,500,176	B1	12/2002	Truckai et al.
6,500,194	B2	12/2002	Benderev et al.
6,503,257	B2	1/2003	Grant et al.
6,503,259	B2	1/2003	Huxel et al.
6,505,768	B2	1/2003	Whitman
6,510,854	B2	1/2003	Goble
6,511,468	B1	1/2003	Cragg et al.
6,512,360	B1	1/2003	Goto et al.
6,517,528	B1	2/2003	Pantages et al.
6,517,535	B2	2/2003	Edwards
6,517,565	B1	2/2003	Whitman et al.
6,517,566	B1	2/2003	Hovland et al.
6,522,101	B2	2/2003	Malackowski
6,527,782	B2	3/2003	Hogg et al.
6,527,785	B2	3/2003	Sancoff et al.
6,533,157	B1	3/2003	Whitman
6,533,784	B2	3/2003	Truckai et al.
6,535,764	B2	3/2003	Imran et al.
6,543,456	B1	4/2003	Freeman
6,545,384	B1	4/2003	Pelrine et al.
6,547,786	B1	4/2003	Goble
6,550,546	B2	4/2003	Thurler et al.
6,551,333	B2	4/2003	Kuhns et al.
6,554,861	B2	4/2003	Knox et al.
6,555,770	B2	4/2003	Kawase
6,558,378	B2	5/2003	Sherman et al.
6,558,379	B1	5/2003	Batchelor et al.
6,565,560	B1	5/2003	Goble et al.
6,566,619	B2	5/2003	Gillman et al.
6,569,085	B2	5/2003	Kortenbach et al.
6,569,171	B2	5/2003	DeGuillebon et al.
6,578,751	B2	6/2003	Hartwick
6,582,427	B1	6/2003	Goble et al.
6,582,441	B1	6/2003	He et al.
6,583,533	B2	6/2003	Pelrine et al.
6,585,144	B2	7/2003	Adams et al.
6,587,750	B2	7/2003	Gerbi et al.
6,588,643	B2	7/2003	Bolduc et al.
6,588,931	B2	7/2003	Betzner et al.
6,589,164	B1	7/2003	Flaherty
6,592,538	B1	7/2003	Hotchkiss et al.
6,592,597	B2	7/2003	Grant et al.
6,596,296	B1	7/2003	Nelson et al.
6,596,304	B1	7/2003	Bayon et al.
6,596,432	B2	7/2003	Kawakami et al.
D478,665	S	8/2003	Isaacs et al.
D478,986	S	8/2003	Johnston et al.
6,601,749	B2	8/2003	Sullivan et al.
6,602,252	B2	8/2003	Mollenauer
6,602,262	B2	8/2003	Griego et al.
6,605,078	B2	8/2003	Adams
6,605,669	B2	8/2003	Awokola et al.
6,607,475	B2	8/2003	Doyle et al.
6,611,793	B1	8/2003	Burnside et al.
6,613,069	B2	9/2003	Boyd et al.
6,616,686	B2	9/2003	Coleman et al.
6,619,529	B2	9/2003	Green et al.
6,620,166	B1	9/2003	Wenstrom, Jr. et al.
6,626,834	B2	9/2003	Dunne et al.
6,629,630	B2	10/2003	Adams
6,629,974	B2	10/2003	Penny et al.
6,629,988	B2	10/2003	Weadock
6,635,838	B1	10/2003	Kornelson
6,636,412	B2	10/2003	Smith
6,638,108	B2	10/2003	Tachi
6,638,285	B2	10/2003	Gabbay
6,638,297	B1	10/2003	Huitema
RE38,335	E	11/2003	Aust et al.

(56) **References Cited**

U.S. PATENT DOCUMENTS

6,641,528 B2 11/2003 Torii
6,644,532 B2 11/2003 Green et al.
6,645,201 B1 11/2003 Utley et al.
6,646,307 B1 11/2003 Yu et al.
6,648,816 B2 11/2003 Irion et al.
6,652,595 B1 11/2003 Nicolo
D484,243 S 12/2003 Ryan et al.
D484,595 S 12/2003 Ryan et al.
D484,596 S 12/2003 Ryan et al.
6,656,177 B2 12/2003 Truckai et al.
6,656,193 B2 12/2003 Grant et al.
6,663,623 B1 12/2003 Oyama et al.
6,663,641 B1 12/2003 Kovac et al.
6,666,854 B1 12/2003 Lange
6,666,875 B1 12/2003 Sakurai et al.
6,667,825 B2 12/2003 Lu et al.
6,669,073 B2 12/2003 Milliman et al.
6,671,185 B2 12/2003 Duval
D484,977 S 1/2004 Ryan et al.
6,676,660 B2 1/2004 Wampler et al.
6,679,269 B2 1/2004 Swanson
6,679,410 B2 1/2004 Würsch et al.
6,681,978 B2 1/2004 Geiste et al.
6,681,979 B2 1/2004 Whitman
6,682,527 B2 1/2004 Strul
6,682,528 B2 1/2004 Frazier et al.
6,685,727 B2 2/2004 Fisher et al.
6,689,153 B1 2/2004 Skiba
6,692,507 B2 2/2004 Pugsley et al.
6,695,198 B2 2/2004 Adams et al.
6,695,199 B2 2/2004 Whitman
6,695,774 B2 2/2004 Hale et al.
6,697,048 B2 2/2004 Rosenberg et al.
6,698,643 B2 3/2004 Whitman
6,699,235 B2 3/2004 Wallace et al.
6,704,210 B1 3/2004 Myers
6,705,503 B1 3/2004 Pedicini et al.
6,709,445 B2 3/2004 Boebel et al.
6,712,773 B1 3/2004 Viola
6,716,223 B2 4/2004 Leopold et al.
6,716,232 B1 4/2004 Vidal et al.
6,716,233 B1 4/2004 Whitman
6,722,552 B2 4/2004 Fenton, Jr.
6,723,087 B2 4/2004 O'Neill et al.
6,723,091 B2 4/2004 Goble et al.
6,726,697 B2 4/2004 Nicholas et al.
6,726,706 B2 4/2004 Dominguez
6,729,119 B2 5/2004 Schnipke et al.
6,736,825 B2 5/2004 Blatter et al.
6,736,854 B2 5/2004 Vadurro et al.
6,740,030 B2 5/2004 Martone et al.
6,747,121 B2 6/2004 Gogolewski
6,749,560 B1 6/2004 Konstorum et al.
6,752,768 B2 6/2004 Burdorff et al.
6,752,816 B2 6/2004 Culp et al.
6,755,195 B1 6/2004 Lemke et al.
6,755,338 B2 6/2004 Hahnen et al.
6,758,846 B2 7/2004 Goble et al.
6,761,685 B2 7/2004 Adams et al.
6,762,339 B1 7/2004 Klun et al.
6,764,445 B2 7/2004 Ramans et al.
6,767,352 B2 7/2004 Field et al.
6,767,356 B2 7/2004 Kanner et al.
6,769,590 B2 8/2004 Vresh et al.
6,769,594 B2 8/2004 Orban, III
6,770,027 B2 8/2004 Banik et al.
6,770,070 B1 8/2004 Balbierz
6,770,072 B1 8/2004 Truckai et al.
6,773,409 B2 8/2004 Truckai et al.
6,773,438 B1 8/2004 Knodel et al.
6,775,575 B2 8/2004 Bommannan et al.
6,777,838 B2 8/2004 Miekka et al.
6,780,151 B2 8/2004 Grabover et al.
6,780,180 B1 8/2004 Goble et al.
6,783,524 B2 8/2004 Anderson et al.
6,786,382 B1 9/2004 Hoffman
6,786,864 B2 9/2004 Matsuura et al.
6,786,896 B1 9/2004 Madani et al.
6,788,018 B1 9/2004 Blumenkranz
6,790,173 B2 9/2004 Saadat et al.
6,793,652 B1 9/2004 Whitman et al.
6,793,661 B2 9/2004 Hamilton et al.
6,793,663 B2 9/2004 Kneifel et al.
6,802,843 B2 10/2004 Truckai et al.
6,805,273 B2 10/2004 Bilotti et al.
6,806,808 B1 10/2004 Watters et al.
6,808,525 B2 10/2004 Latterell et al.
6,814,741 B2 11/2004 Bowman et al.
6,817,508 B1 11/2004 Racenet et al.
6,817,509 B2 11/2004 Geiste et al.
6,817,974 B2 11/2004 Cooper et al.
6,818,018 B1 11/2004 Sawhney
6,820,791 B2 11/2004 Adams
6,821,273 B2 11/2004 Mollenauer
6,821,282 B2 11/2004 Perry et al.
6,821,284 B2 11/2004 Sturtz et al.
6,827,246 B2 12/2004 Sullivan et al.
6,827,712 B2 12/2004 Tovey et al.
6,827,725 B2 12/2004 Batchelor et al.
6,828,902 B2 12/2004 Casden
6,830,174 B2 12/2004 Hillstead et al.
6,831,629 B2 12/2004 Nishino et al.
6,832,998 B2 12/2004 Goble
6,834,001 B2 12/2004 Myono
6,835,173 B2 12/2004 Couvillon, Jr.
6,835,199 B2 12/2004 McGuckin, Jr. et al.
6,835,336 B2 12/2004 Watt
6,837,846 B2 1/2005 Jaffe et al.
6,837,883 B2 1/2005 Moll et al.
6,838,493 B2 1/2005 Williams et al.
6,840,423 B2 1/2005 Adams et al.
6,843,403 B2 1/2005 Whitman
6,843,789 B2 1/2005 Goble
6,843,793 B2 1/2005 Brock et al.
6,846,307 B2 1/2005 Whitman et al.
6,846,308 B2 1/2005 Whitman et al.
6,846,309 B2 1/2005 Whitman et al.
6,849,071 B2 2/2005 Whitman et al.
6,850,817 B1 2/2005 Green
6,853,879 B2 2/2005 Sunaoshi
6,858,005 B2 2/2005 Ohline et al.
RE38,708 E 3/2005 Bolanos et al.
6,861,142 B1 3/2005 Wilkie et al.
6,863,694 B1 3/2005 Boyce et al.
6,866,178 B2 3/2005 Adams et al.
6,866,671 B2 3/2005 Tierney et al.
6,867,248 B1 3/2005 Martin et al.
6,869,430 B2 3/2005 Balbierz et al.
6,869,435 B2 3/2005 Blake, III
6,872,214 B2 3/2005 Sonnenschein et al.
6,874,669 B2 4/2005 Adams et al.
6,877,647 B2 4/2005 Green et al.
6,878,106 B1 4/2005 Herrmann
6,889,116 B2 5/2005 Jinno
6,893,435 B2 5/2005 Goble
6,899,538 B2 5/2005 Matoba
6,905,057 B2 6/2005 Swayze et al.
6,905,497 B2 6/2005 Truckai et al.
6,905,498 B2 6/2005 Hooven
6,908,472 B2 6/2005 Wiener et al.
6,911,033 B2 6/2005 de Guillebon et al.
6,911,916 B1 6/2005 Wang et al.
6,913,579 B2 7/2005 Truckai et al.
6,913,608 B2 7/2005 Liddicoat et al.
6,913,613 B2 7/2005 Schwarz et al.
6,921,397 B2 7/2005 Corcoran et al.
6,921,412 B1 7/2005 Black et al.
6,923,093 B2 8/2005 Ullah
6,923,803 B2 8/2005 Goble
6,926,716 B2 8/2005 Baker et al.
6,929,641 B2 8/2005 Goble et al.
6,929,644 B2 8/2005 Truckai et al.
6,931,830 B2 8/2005 Liao
6,932,218 B2 8/2005 Kosann et al.

(56) **References Cited**

U.S. PATENT DOCUMENTS

6,932,810	B2	8/2005	Ryan
6,936,042	B2	8/2005	Wallace et al.
6,936,948	B2	8/2005	Bell et al.
6,939,358	B2	9/2005	Palacios et al.
6,942,662	B2	9/2005	Goble et al.
6,945,444	B2	9/2005	Gresham et al.
6,945,981	B2	9/2005	Donofrio et al.
6,953,138	B1	10/2005	Dworak et al.
6,953,139	B2	10/2005	Milliman et al.
6,958,035	B2	10/2005	Friedman et al.
6,959,851	B2	11/2005	Heinrich
6,959,852	B2	11/2005	Shelton, IV et al.
6,960,107	B1	11/2005	Schaub et al.
6,960,163	B2	11/2005	Ewers et al.
6,960,220	B2	11/2005	Marino et al.
6,962,587	B2	11/2005	Johnson et al.
6,963,792	B1	11/2005	Green
6,964,363	B2	11/2005	Wales et al.
6,966,907	B2	11/2005	Goble
6,966,909	B2	11/2005	Marshall et al.
6,971,988	B2	12/2005	Orban, III
6,972,199	B2	12/2005	Lebouitz et al.
6,974,462	B2	12/2005	Sater
6,978,921	B2	12/2005	Shelton, IV et al.
6,978,922	B2	12/2005	Bilotti et al.
6,981,628	B2	1/2006	Wales
6,981,941	B2	1/2006	Whitman et al.
6,981,978	B2	1/2006	Gannoe
6,984,203	B2	1/2006	Tartaglia et al.
6,984,231	B2	1/2006	Goble et al.
6,986,451	B1	1/2006	Mastri et al.
6,988,649	B2	1/2006	Shelton, IV et al.
6,988,650	B2	1/2006	Schwemberger et al.
6,990,796	B2	1/2006	Schnipke et al.
6,993,413	B2	1/2006	Sunaoshi
6,994,708	B2	2/2006	Manzo
6,995,729	B2	2/2006	Govari et al.
6,997,931	B2	2/2006	Sauer et al.
6,998,736	B2	2/2006	Lee et al.
6,998,816	B2	2/2006	Wieck et al.
7,000,818	B2	2/2006	Shelton, IV et al.
7,000,819	B2	2/2006	Swayze et al.
7,001,380	B2	2/2006	Goble
7,001,408	B2	2/2006	Knodel et al.
7,008,435	B2	3/2006	Cummins
7,009,039	B2	3/2006	Yayon et al.
7,011,657	B2	3/2006	Truckai et al.
7,018,357	B2	3/2006	Emmons
7,018,390	B2	3/2006	Turovskiy et al.
7,021,669	B1	4/2006	Lindermeir et al.
7,025,743	B2	4/2006	Mann et al.
7,029,435	B2	4/2006	Nakao
7,029,439	B2	4/2006	Roberts et al.
7,032,798	B2	4/2006	Whitman et al.
7,032,799	B2	4/2006	Viola et al.
7,033,356	B2	4/2006	Latterell et al.
7,036,680	B1	5/2006	Flannery
7,037,344	B2	5/2006	Kagan et al.
7,041,102	B2	5/2006	Truckai et al.
7,041,868	B2	5/2006	Greene et al.
7,043,852	B2	5/2006	Hayashida et al.
7,044,350	B2	5/2006	Kameyama et al.
7,044,352	B2	5/2006	Shelton, IV et al.
7,044,353	B2	5/2006	Mastri et al.
7,048,687	B1	5/2006	Reuss et al.
7,048,745	B2	5/2006	Tierney et al.
7,052,494	B2	5/2006	Goble et al.
7,052,499	B2	5/2006	Steger et al.
7,055,730	B2	6/2006	Ehrenfels et al.
7,055,731	B2	6/2006	Shelton, IV et al.
7,056,284	B2	6/2006	Martone et al.
7,056,330	B2	6/2006	Gayton
7,059,331	B2	6/2006	Adams et al.
7,059,508	B2	6/2006	Shelton, IV et al.
7,063,671	B2	6/2006	Couvillon, Jr.
7,063,712	B2	6/2006	Vargas et al.
7,066,879	B2	6/2006	Fowler et al.
7,066,944	B2	6/2006	Laufer et al.
7,067,038	B2	6/2006	Trokhan et al.
7,070,083	B2	7/2006	Jankowski
7,070,559	B2	7/2006	Adams et al.
7,070,597	B2	7/2006	Truckai et al.
7,071,287	B2	7/2006	Rhine et al.
7,075,770	B1	7/2006	Smith
7,077,856	B2	7/2006	Whitman
7,080,769	B2	7/2006	Vresh et al.
7,081,114	B2	7/2006	Rashidi
7,083,073	B2	8/2006	Yoshie et al.
7,083,075	B2	8/2006	Swayze et al.
7,083,571	B2	8/2006	Wang et al.
7,083,615	B2	8/2006	Peterson et al.
7,083,619	B2	8/2006	Truckai et al.
7,083,620	B2	8/2006	Jahns et al.
7,087,054	B2	8/2006	Truckai et al.
7,087,071	B2	8/2006	Nicholas et al.
7,090,637	B2	8/2006	Danitz et al.
7,090,673	B2	8/2006	Dycus et al.
7,090,683	B2	8/2006	Brock et al.
7,090,684	B2	8/2006	McGuckin, Jr. et al.
7,094,202	B2	8/2006	Nobis et al.
7,094,247	B2	8/2006	Monassevitch et al.
7,097,089	B2	8/2006	Marczyk
7,097,644	B2	8/2006	Long
7,097,650	B2	8/2006	Weller et al.
7,098,794	B2	8/2006	Lindsay et al.
7,100,949	B2	9/2006	Williams et al.
7,101,394	B2	9/2006	Hamm et al.
7,104,741	B2	9/2006	Krohn
7,108,695	B2	9/2006	Witt et al.
7,108,701	B2	9/2006	Evens et al.
7,108,709	B2	9/2006	Cummins
7,111,769	B2	9/2006	Wales et al.
7,112,214	B2	9/2006	Peterson et al.
RE39,358	E	10/2006	Goble
7,114,642	B2	10/2006	Whitman
7,118,582	B1	10/2006	Wang et al.
7,121,446	B2	10/2006	Arad et al.
7,122,028	B2	10/2006	Looper et al.
7,125,409	B2	10/2006	Truckai et al.
7,126,303	B2	10/2006	Farritor et al.
7,126,879	B2	10/2006	Snyder
7,128,253	B2	10/2006	Mastri et al.
7,128,254	B2	10/2006	Shelton, IV et al.
7,128,748	B2	10/2006	Mooradian et al.
7,131,445	B2	11/2006	Amoah
7,133,601	B2	11/2006	Phillips et al.
7,134,587	B2	11/2006	Schwemberger et al.
7,137,980	B2	11/2006	Buysse et al.
7,137,981	B2	11/2006	Long
7,139,016	B2	11/2006	Squilla et al.
7,140,527	B2	11/2006	Ehrenfels et al.
7,140,528	B2	11/2006	Shelton, IV
7,143,923	B2	12/2006	Shelton, IV et al.
7,143,924	B2	12/2006	Scirica et al.
7,143,925	B2	12/2006	Shelton, IV et al.
7,143,926	B2	12/2006	Shelton, IV et al.
7,147,138	B2	12/2006	Shelton, IV
7,147,139	B2	12/2006	Schwemberger et al.
7,147,140	B2	12/2006	Wukusick et al.
7,147,637	B2	12/2006	Goble
7,147,650	B2	12/2006	Lee
7,150,748	B2	12/2006	Ebbutt et al.
7,153,300	B2	12/2006	Goble
7,155,316	B2	12/2006	Sutherland et al.
7,156,863	B2	1/2007	Sonnenschein et al.
7,159,750	B2	1/2007	Racenet et al.
7,160,296	B2	1/2007	Pearson et al.
7,160,299	B2	1/2007	Baily
7,161,036	B2	1/2007	Oikawa et al.
7,166,133	B2	1/2007	Evans et al.
7,168,604	B2	1/2007	Milliman et al.
7,171,279	B2	1/2007	Buckingham et al.
7,172,104	B2	2/2007	Scirica et al.
7,172,593	B2	2/2007	Trieu et al.

(56) **References Cited**

U.S. PATENT DOCUMENTS

7,179,223	B2	2/2007	Motoki et al.
7,179,267	B2	2/2007	Nolan et al.
7,182,239	B1	2/2007	Myers
7,182,763	B2	2/2007	Nardella
7,183,737	B2	2/2007	Kitagawa
7,188,758	B2	3/2007	Viola et al.
7,189,207	B2	3/2007	Viola
7,195,627	B2	3/2007	Amoah et al.
7,199,537	B2	4/2007	Okamura et al.
7,202,653	B2	4/2007	Pai
7,204,835	B2	4/2007	Latterell et al.
7,207,233	B2	4/2007	Wadge
7,207,471	B2	4/2007	Heinrich et al.
7,207,472	B2	4/2007	Wukusick et al.
7,207,556	B2	4/2007	Saitoh et al.
7,208,005	B2	4/2007	Frecker et al.
7,210,609	B2	5/2007	Leiboff et al.
7,211,081	B2	5/2007	Goble
7,211,084	B2	5/2007	Goble et al.
7,211,092	B2	5/2007	Hughett
7,211,979	B2	5/2007	Khatib et al.
7,213,736	B2	5/2007	Wales et al.
7,214,224	B2	5/2007	Goble
7,215,517	B2	5/2007	Takamatsu
7,217,285	B2	5/2007	Vargas et al.
7,220,260	B2	5/2007	Fleming et al.
7,220,272	B2	5/2007	Weadock
7,225,963	B2	6/2007	Scirica
7,225,964	B2	6/2007	Mastri et al.
7,234,624	B2	6/2007	Gresham et al.
7,235,089	B1	6/2007	McGuckin, Jr.
7,235,302	B2	6/2007	Jing et al.
7,237,708	B1	7/2007	Guy et al.
7,238,195	B2	7/2007	Viola
7,238,901	B2	7/2007	Kim et al.
7,241,288	B2	7/2007	Braun
7,246,734	B2	7/2007	Shelton, IV
7,247,161	B2	7/2007	Johnston et al.
7,249,267	B2	7/2007	Chapius
7,252,660	B2	8/2007	Kunz
7,255,696	B2	8/2007	Goble et al.
7,256,695	B2	8/2007	Hamel et al.
7,258,262	B2	8/2007	Mastri et al.
7,258,546	B2	8/2007	Beier et al.
7,260,431	B2	8/2007	Libbus et al.
7,265,374	B2	9/2007	Lee et al.
7,267,679	B2	9/2007	McGuckin, Jr. et al.
7,273,483	B2	9/2007	Wiener et al.
7,278,562	B2	10/2007	Mastri et al.
7,278,563	B1	10/2007	Green
7,278,949	B2	10/2007	Bader
7,278,994	B2	10/2007	Goble
7,282,048	B2	10/2007	Goble et al.
7,286,850	B2	10/2007	Frielink et al.
7,287,682	B1	10/2007	Ezzat et al.
7,293,685	B2	11/2007	Ehrenfels et al.
7,295,893	B2	11/2007	Sunaoshi
7,295,907	B2	11/2007	Lu et al.
7,296,722	B2	11/2007	Ivanko
7,296,724	B2	11/2007	Green et al.
7,297,149	B2	11/2007	Vitali et al.
7,300,373	B2	11/2007	Jinno et al.
7,300,450	B2	11/2007	Vleugels et al.
7,303,106	B2	12/2007	Milliman et al.
7,303,107	B2	12/2007	Milliman et al.
7,303,108	B2	12/2007	Shelton, IV
7,303,502	B2	12/2007	Thompson
7,303,556	B2	12/2007	Metzger
7,306,597	B2	12/2007	Manzo
7,308,998	B2	12/2007	Mastri et al.
7,322,859	B2	1/2008	Evans
7,322,975	B2	1/2008	Goble et al.
7,322,994	B2	1/2008	Nicholas et al.
7,324,572	B2	1/2008	Chang
7,326,203	B2	2/2008	Papineau et al.
7,326,213	B2	2/2008	Benderev et al.
7,328,828	B2	2/2008	Ortiz et al.
7,328,829	B2	2/2008	Arad et al.
7,330,004	B2	2/2008	DeJonge et al.
7,331,340	B2	2/2008	Barney
7,334,717	B2	2/2008	Rethy et al.
7,334,718	B2	2/2008	McAlister et al.
7,335,199	B2	2/2008	Goble et al.
7,336,048	B2	2/2008	Lohr
7,336,184	B2	2/2008	Smith et al.
7,338,513	B2	3/2008	Lee et al.
7,341,591	B2	3/2008	Grinberg
7,343,920	B2	3/2008	Toby et al.
7,344,532	B2	3/2008	Goble et al.
7,344,533	B2	3/2008	Pearson et al.
7,346,344	B2	3/2008	Fontaine
7,348,763	B1	3/2008	Reinhart et al.
RE40,237	E	4/2008	Bilotti et al.
7,351,258	B2	4/2008	Ricotta et al.
7,354,447	B2	4/2008	Shelton, IV et al.
7,354,502	B2	4/2008	Polat et al.
7,357,287	B2	4/2008	Shelton, IV et al.
7,357,806	B2	4/2008	Rivera et al.
7,361,195	B2	4/2008	Schwartz et al.
7,364,060	B2	4/2008	Milliman
7,364,061	B2	4/2008	Swayze et al.
7,377,918	B2	5/2008	Amoah
7,377,928	B2	5/2008	Zubik et al.
7,380,695	B2	6/2008	Doll et al.
7,380,696	B2	6/2008	Shelton, IV et al.
7,384,417	B2	6/2008	Cucin
7,386,365	B2	6/2008	Nixon
7,386,730	B2	6/2008	Uchikubo
7,388,217	B2	6/2008	Buschbeck et al.
7,388,484	B2	6/2008	Hsu
7,391,173	B2	6/2008	Schena
7,396,356	B2	7/2008	Mollenauer
7,397,364	B2	7/2008	Govari
7,398,907	B2	7/2008	Racenet et al.
7,398,908	B2	7/2008	Holsten et al.
7,400,752	B2	7/2008	Zacharias
7,401,721	B2	7/2008	Holsten et al.
7,404,508	B2	7/2008	Smith et al.
7,404,509	B2	7/2008	Ortiz et al.
7,404,822	B2	7/2008	Viart et al.
7,407,074	B2	8/2008	Ortiz et al.
7,407,075	B2	8/2008	Holsten et al.
7,407,076	B2	8/2008	Racenet et al.
7,407,077	B2	8/2008	Ortiz et al.
7,407,078	B2	8/2008	Shelton, IV et al.
7,410,086	B2	8/2008	Ortiz et al.
7,413,563	B2	8/2008	Corcoran et al.
7,416,101	B2	8/2008	Shelton, IV et al.
7,418,078	B2	8/2008	Blanz et al.
RE40,514	E	9/2008	Mastri et al.
7,419,080	B2	9/2008	Smith et al.
7,419,081	B2	9/2008	Ehrenfels et al.
7,419,495	B2	9/2008	Menn et al.
7,422,136	B1	9/2008	Marczyk
7,422,138	B2	9/2008	Bilotti et al.
7,422,139	B2	9/2008	Shelton, IV et al.
7,424,965	B2	9/2008	Racenet et al.
7,427,607	B2	9/2008	Suzuki
7,431,188	B1	10/2008	Marczyk
7,431,189	B2	10/2008	Shelton, IV et al.
7,431,694	B2	10/2008	Stefanchik et al.
7,431,730	B2	10/2008	Viola
7,434,715	B2	10/2008	Shelton, IV et al.
7,434,717	B2	10/2008	Shelton, IV et al.
7,438,209	B1	10/2008	Hess et al.
7,438,718	B2	10/2008	Milliman et al.
7,439,354	B2	10/2008	Lenges et al.
7,441,684	B2	10/2008	Shelton, IV et al.
7,441,685	B1	10/2008	Boudreaux
7,442,201	B2	10/2008	Pugsley et al.
7,443,547	B2	10/2008	Moreno et al.
7,448,525	B2	11/2008	Shelton, IV et al.
7,451,904	B2	11/2008	Shelton, IV
7,455,208	B2	11/2008	Wales et al.

(56) **References Cited**

U.S. PATENT DOCUMENTS

7,455,676 B2 11/2008 Holsten et al.
7,455,682 B2 11/2008 Viola
7,461,767 B2 12/2008 Viola et al.
7,462,187 B2 12/2008 Johnston et al.
7,464,846 B2 12/2008 Shelton, IV et al.
7,464,847 B2 12/2008 Viola et al.
7,464,849 B2 12/2008 Shelton, IV et al.
7,467,740 B2 12/2008 Shelton, IV et al.
7,467,849 B2 12/2008 Silverbrook et al.
7,472,814 B2 1/2009 Mastri et al.
7,472,815 B2 1/2009 Shelton, IV et al.
7,472,816 B2 1/2009 Holsten et al.
7,473,253 B2 1/2009 Dycus et al.
7,473,263 B2 1/2009 Johnston et al.
7,476,237 B2 1/2009 Taniguchi et al.
7,479,608 B2 1/2009 Smith
7,481,347 B2 1/2009 Roy
7,481,348 B2 1/2009 Marczyk
7,481,349 B2 1/2009 Holsten et al.
7,481,824 B2 1/2009 Boudreaux et al.
7,485,133 B2 2/2009 Cannon et al.
7,485,142 B2 2/2009 Milo
7,487,899 B2 2/2009 Shelton, IV et al.
7,490,749 B2 2/2009 Schall et al.
7,494,039 B2 2/2009 Racenet et al.
7,494,499 B2 2/2009 Nagase et al.
7,494,501 B2 2/2009 Ahlberg et al.
7,500,979 B2 3/2009 Hueil et al.
7,501,198 B2 3/2009 Barlev et al.
7,503,474 B2 3/2009 Hillstead et al.
7,506,790 B2 3/2009 Shelton, IV
7,506,791 B2 3/2009 Omaits et al.
7,507,202 B2 3/2009 Schoellhorn
7,510,107 B2 3/2009 Timm et al.
7,510,566 B2 3/2009 Jacobs et al.
7,513,408 B2 4/2009 Shelton, IV et al.
7,517,356 B2 4/2009 Heinrich
7,524,320 B2 4/2009 Tierney et al.
7,530,984 B2 5/2009 Sonnenschein et al.
7,530,985 B2 5/2009 Takemoto et al.
7,533,906 B2 5/2009 Luettgen et al.
7,534,259 B2 5/2009 Lashinski et al.
7,540,867 B2 6/2009 Jinno et al.
7,542,807 B2 6/2009 Bertolero et al.
7,546,939 B2 6/2009 Adams et al.
7,546,940 B2 6/2009 Milliman et al.
7,547,312 B2 6/2009 Bauman et al.
7,549,563 B2 6/2009 Mather et al.
7,549,564 B2 6/2009 Boudreaux
7,549,998 B2 6/2009 Braun
7,552,854 B2 6/2009 Wixey et al.
7,553,173 B2 6/2009 Kowalick
7,556,185 B2 7/2009 Viola
7,556,186 B2 7/2009 Milliman
7,556,647 B2 7/2009 Drews et al.
7,559,449 B2 7/2009 Viola
7,559,450 B2 7/2009 Wales et al.
7,559,452 B2 7/2009 Wales et al.
7,559,937 B2 7/2009 de la Torre et al.
7,562,910 B2 7/2009 Kertesz et al.
7,563,862 B2 7/2009 Sieg et al.
7,565,993 B2 7/2009 Milliman et al.
7,566,300 B2 7/2009 Devierre et al.
7,567,045 B2 7/2009 Fristedt
7,568,603 B2 8/2009 Shelton, IV et al.
7,568,604 B2 8/2009 Ehrenfels et al.
7,568,619 B2 8/2009 Todd et al.
7,575,144 B2 8/2009 Ortiz et al.
7,583,063 B2 9/2009 Dooley
7,588,174 B2 9/2009 Holsten et al.
7,588,175 B2 9/2009 Timm et al.
7,588,176 B2 9/2009 Timm et al.
7,588,177 B2 9/2009 Racenet
7,591,783 B2 9/2009 Boulais et al.
7,591,818 B2 9/2009 Bertolero et al.
7,597,229 B2 10/2009 Boudreaux et al.
7,597,230 B2 10/2009 Racenet et al.
7,597,693 B2 10/2009 Garrison
7,600,663 B2 10/2009 Green
7,604,150 B2 10/2009 Boudreaux
7,604,151 B2 10/2009 Hess et al.
7,607,557 B2 10/2009 Shelton, IV et al.
7,611,038 B2 11/2009 Racenet et al.
7,611,474 B2 11/2009 Hibner et al.
7,615,003 B2 11/2009 Stefanchik et al.
7,615,067 B2 11/2009 Lee et al.
7,617,961 B2 11/2009 Viola
7,624,902 B2 12/2009 Marczyk et al.
7,624,903 B2 12/2009 Green et al.
7,625,370 B2 12/2009 Hart et al.
7,631,793 B2 12/2009 Rethy et al.
7,631,794 B2 12/2009 Rethy et al.
7,635,074 B2 12/2009 Olson et al.
7,637,409 B2 12/2009 Marczyk
7,637,410 B2 12/2009 Marczyk
7,638,958 B2 12/2009 Philipp et al.
7,641,091 B2 1/2010 Olson et al.
7,641,092 B2 1/2010 Kruszynski et al.
7,641,093 B2 1/2010 Doll et al.
7,641,095 B2 1/2010 Viola
7,644,783 B2 1/2010 Roberts et al.
7,644,848 B2 1/2010 Swayze et al.
7,645,230 B2 1/2010 Mikkaichi et al.
7,648,519 B2 1/2010 Lee et al.
7,650,185 B2 1/2010 Maile et al.
7,651,017 B2 1/2010 Ortiz et al.
7,651,498 B2 1/2010 Shifrin et al.
7,654,431 B2 2/2010 Hueil et al.
7,655,288 B2 2/2010 Bauman et al.
7,656,131 B2 2/2010 Embrey et al.
7,658,311 B2 2/2010 Boudreaux
7,658,312 B2 2/2010 Vidal et al.
7,659,219 B2 2/2010 Biran et al.
7,662,161 B2 2/2010 Briganti et al.
7,665,646 B2 2/2010 Prommersberger
7,665,647 B2 2/2010 Shelton, IV et al.
7,669,746 B2 3/2010 Shelton, IV
7,669,747 B2 3/2010 Weisenburgh, II et al.
7,670,334 B2 3/2010 Hueil et al.
7,673,780 B2 3/2010 Shelton, IV et al.
7,673,781 B2 3/2010 Swayze et al.
7,673,782 B2 3/2010 Hess et al.
7,673,783 B2 3/2010 Morgan et al.
7,674,253 B2 3/2010 Fisher et al.
7,674,255 B2 3/2010 Braun
7,674,263 B2 3/2010 Ryan
7,674,270 B2 3/2010 Layer
7,682,307 B2 3/2010 Danitz et al.
7,682,367 B2 3/2010 Shah et al.
7,686,201 B2 3/2010 Csiky
7,686,804 B2 3/2010 Johnson et al.
7,686,826 B2 3/2010 Lee et al.
7,688,028 B2 3/2010 Phillips et al.
7,691,098 B2 4/2010 Wallace et al.
7,691,103 B2 4/2010 Fernandez et al.
7,691,106 B2 4/2010 Schenberger et al.
7,694,865 B2 4/2010 Scirica
7,695,485 B2 4/2010 Whitman et al.
7,699,204 B2 4/2010 Viola
7,699,835 B2 4/2010 Lee et al.
7,699,844 B2 4/2010 Utley et al.
7,699,846 B2 4/2010 Ryan
7,699,856 B2 4/2010 Van Wyk et al.
7,699,859 B2 4/2010 Bombard et al.
7,699,860 B2 4/2010 Huitema et al.
7,703,653 B2 4/2010 Shah et al.
7,708,180 B2 5/2010 Murray et al.
7,708,181 B2 5/2010 Cole et al.
7,708,758 B2 5/2010 Lee et al.
7,712,182 B2 5/2010 Zeiler et al.
7,714,239 B2 5/2010 Smith
7,717,312 B2 5/2010 Beetel
7,717,313 B2 5/2010 Criscuolo et al.
7,717,846 B2 5/2010 Zirps et al.

(56) **References Cited**

U.S. PATENT DOCUMENTS

7,718,180	B2	5/2010	Karp
7,718,556	B2	5/2010	Matsuda et al.
7,721,930	B2	5/2010	McKenna et al.
7,721,931	B2	5/2010	Shelton, IV et al.
7,721,933	B2	5/2010	Ehrenfels et al.
7,721,934	B2	5/2010	Shelton, IV et al.
7,721,936	B2	5/2010	Shelton, IV et al.
7,722,527	B2	5/2010	Bouchier et al.
7,722,607	B2	5/2010	Dumbauld et al.
7,722,610	B2	5/2010	Viola et al.
7,726,537	B2	6/2010	Olson et al.
7,726,538	B2	6/2010	Holsten et al.
7,726,539	B2	6/2010	Holsten et al.
7,727,954	B2	6/2010	McKay
7,729,742	B2	6/2010	Govari
7,731,072	B2	6/2010	Timm et al.
7,731,073	B2	6/2010	Wixey et al.
7,731,724	B2	6/2010	Huitema et al.
7,735,703	B2	6/2010	Morgan et al.
7,736,374	B2	6/2010	Vaughan et al.
7,738,971	B2	6/2010	Swayze et al.
7,740,159	B2	6/2010	Shelton, IV et al.
7,742,036	B2	6/2010	Grant et al.
7,743,960	B2	6/2010	Whitman et al.
7,744,624	B2	6/2010	Bettuchi
7,744,627	B2	6/2010	Orban, III et al.
7,744,628	B2	6/2010	Viola
7,748,587	B2	7/2010	Haramiishi et al.
7,749,204	B2	7/2010	Dhanaraj et al.
7,751,870	B2	7/2010	Whitman
7,753,245	B2	7/2010	Boudreaux et al.
7,753,246	B2	7/2010	Scirica
7,753,904	B2	7/2010	Shelton, IV et al.
7,758,612	B2	7/2010	Shipp
7,766,207	B2	8/2010	Mather et al.
7,766,209	B2	8/2010	Baxter, III et al.
7,766,210	B2	8/2010	Shelton, IV et al.
7,766,821	B2	8/2010	Brunnen et al.
7,766,894	B2	8/2010	Weitzner et al.
7,770,773	B2	8/2010	Whitman et al.
7,770,774	B2	8/2010	Mastri et al.
7,770,775	B2	8/2010	Shelton, IV et al.
7,770,776	B2	8/2010	Chen et al.
7,771,396	B2	8/2010	Stefanchik et al.
7,772,720	B2	8/2010	McGee et al.
7,776,037	B2	8/2010	Odom
7,776,060	B2	8/2010	Mooradian et al.
7,778,004	B2	8/2010	Nerheim et al.
7,780,054	B2	8/2010	Wales
7,780,055	B2	8/2010	Scirica et al.
7,780,663	B2	8/2010	Yates et al.
7,780,685	B2	8/2010	Hunt et al.
7,784,662	B2	8/2010	Wales et al.
7,784,663	B2	8/2010	Shelton, IV
7,787,256	B2	8/2010	Chan et al.
7,789,875	B2	9/2010	Brock et al.
7,789,883	B2	9/2010	Takashino et al.
7,789,889	B2	9/2010	Zubik et al.
7,793,812	B2	9/2010	Moore et al.
7,794,475	B2	9/2010	Hess et al.
7,798,386	B2	9/2010	Schall et al.
7,799,039	B2	9/2010	Shelton, IV et al.
7,799,044	B2	9/2010	Johnston et al.
7,799,965	B2	9/2010	Patel et al.
7,803,151	B2	9/2010	Whitman
7,806,891	B2	10/2010	Nowlin et al.
7,810,690	B2	10/2010	Bilotti et al.
7,810,691	B2	10/2010	Boyden et al.
7,810,692	B2	10/2010	Hall et al.
7,810,693	B2	10/2010	Broehl et al.
7,815,092	B2	10/2010	Whitman et al.
7,815,565	B2	10/2010	Stefanchik et al.
7,819,296	B2	10/2010	Hueil et al.
7,819,297	B2	10/2010	Doll et al.
7,819,298	B2	10/2010	Hall et al.
7,819,299	B2	10/2010	Shelton, IV et al.
7,819,884	B2	10/2010	Lee et al.
7,819,886	B2	10/2010	Whitfield et al.
7,823,592	B2	11/2010	Bettuchi et al.
7,823,760	B2	11/2010	Zemlok et al.
7,824,401	B2	11/2010	Manzo et al.
7,824,426	B2	11/2010	Racenet et al.
7,828,189	B2	11/2010	Holsten et al.
7,828,794	B2	11/2010	Sartor
7,828,808	B2	11/2010	Hinman et al.
7,831,292	B2	11/2010	Quaid et al.
7,832,408	B2	11/2010	Shelton, IV et al.
7,832,611	B2	11/2010	Boyden et al.
7,832,612	B2	11/2010	Baxter, III et al.
7,833,234	B2	11/2010	Bailly et al.
7,836,400	B2	11/2010	May et al.
7,837,079	B2	11/2010	Holsten et al.
7,837,080	B2	11/2010	Schwemberger
7,837,081	B2	11/2010	Holsten et al.
7,837,694	B2	11/2010	Tethrake et al.
7,838,789	B2	11/2010	Stoffers et al.
7,841,503	B2	11/2010	Sonnenschein et al.
7,842,025	B2	11/2010	Coleman et al.
7,842,028	B2	11/2010	Lee
7,845,533	B2	12/2010	Marczyk et al.
7,845,534	B2	12/2010	Viola et al.
7,845,535	B2	12/2010	Scircia
7,845,536	B2	12/2010	Viola et al.
7,845,537	B2	12/2010	Shelton, IV et al.
7,846,149	B2	12/2010	Jankowski
7,850,642	B2	12/2010	Moll et al.
7,850,982	B2	12/2010	Stopek et al.
7,854,736	B2	12/2010	Ryan
7,857,183	B2	12/2010	Shelton, IV
7,857,185	B2	12/2010	Swayze et al.
7,857,186	B2	12/2010	Baxter, III et al.
7,857,813	B2	12/2010	Schmitz et al.
7,861,906	B2	1/2011	Doll et al.
7,862,579	B2	1/2011	Ortiz et al.
7,866,525	B2	1/2011	Scirica
7,866,527	B2	1/2011	Hall et al.
7,866,528	B2	1/2011	Olson et al.
7,870,989	B2	1/2011	Viola et al.
7,871,418	B2	1/2011	Thompson et al.
7,879,070	B2	2/2011	Ortiz et al.
7,883,465	B2	2/2011	Donofrio et al.
7,886,951	B2	2/2011	Hessler
7,886,952	B2	2/2011	Scirica et al.
7,887,530	B2	2/2011	Zemlok et al.
7,887,535	B2	2/2011	Lands et al.
7,891,531	B1	2/2011	Ward
7,891,532	B2	2/2011	Mastri et al.
7,892,245	B2	2/2011	Liddicoat et al.
7,893,586	B2	2/2011	West et al.
7,896,214	B2	3/2011	Farascioni
7,896,215	B2	3/2011	Adams et al.
7,896,877	B2	3/2011	Hall et al.
7,896,895	B2	3/2011	Boudreaux et al.
7,900,805	B2	3/2011	Shelton, IV et al.
7,905,380	B2	3/2011	Shelton, IV et al.
7,905,381	B2	3/2011	Baxter, III et al.
7,905,889	B2	3/2011	Catanese, III et al.
7,905,902	B2	3/2011	Huitema et al.
7,909,191	B2	3/2011	Baker et al.
7,909,220	B2	3/2011	Viola
7,909,221	B2	3/2011	Viola et al.
7,913,891	B2	3/2011	Doll et al.
7,913,893	B2	3/2011	Mastri et al.
7,914,543	B2	3/2011	Roth et al.
7,914,551	B2	3/2011	Ortiz et al.
7,918,230	B2	4/2011	Whitman et al.
7,918,376	B1	4/2011	Knodel et al.
7,918,377	B2	4/2011	Measamer et al.
7,918,848	B2	4/2011	Lau et al.
7,918,867	B2	4/2011	Dana et al.
7,922,061	B2	4/2011	Shelton, IV et al.
7,922,063	B2	4/2011	Zemlok et al.
7,922,743	B2	4/2011	Heinrich et al.
7,923,144	B2	4/2011	Kohn et al.

(56) **References Cited**

U.S. PATENT DOCUMENTS

7,926,691	B2	4/2011	Viola et al.
7,927,328	B2	4/2011	Orszulak et al.
7,928,281	B2	4/2011	Augustine
7,930,065	B2	4/2011	Larkin et al.
7,931,660	B2	4/2011	Aranyi et al.
7,931,695	B2	4/2011	Ringeisen
7,934,630	B2	5/2011	Shelton, IV et al.
7,934,631	B2	5/2011	Balbierz et al.
7,935,773	B2	5/2011	Hadba et al.
7,938,307	B2	5/2011	Bettuchi
7,941,865	B2	5/2011	Seman, Jr. et al.
7,942,303	B2	5/2011	Shah
7,942,890	B2	5/2011	D'Agostino et al.
7,944,175	B2	5/2011	Mori et al.
7,945,792	B2	5/2011	Cherpantier
7,950,560	B2	5/2011	Zemlok et al.
7,950,561	B2	5/2011	Aranyi
7,951,071	B2	5/2011	Whitman et al.
7,951,166	B2	5/2011	Orban et al.
7,954,682	B2	6/2011	Giordano et al.
7,954,684	B2	6/2011	Boudreaux
7,954,686	B2	6/2011	Baxter, III et al.
7,954,687	B2	6/2011	Zemlok et al.
7,955,257	B2	6/2011	Frasier et al.
7,955,322	B2	6/2011	Devengenzo et al.
7,955,380	B2	6/2011	Chu et al.
7,959,050	B2	6/2011	Smith et al.
7,959,051	B2	6/2011	Smith et al.
7,959,052	B2	6/2011	Sonnenschein et al.
7,963,432	B2	6/2011	Knodel et al.
7,963,433	B2	6/2011	Whitman et al.
7,963,963	B2	6/2011	Francischelli et al.
7,963,964	B2	6/2011	Santilli et al.
7,964,206	B2	6/2011	Suokas et al.
7,966,799	B2	6/2011	Morgan et al.
7,967,178	B2	6/2011	Scirica et al.
7,967,179	B2	6/2011	Olson et al.
7,967,180	B2	6/2011	Scirica
7,967,181	B2	6/2011	Viola et al.
7,967,839	B2	6/2011	Flock et al.
7,972,298	B2	7/2011	Wallace et al.
7,980,443	B2	7/2011	Scheib et al.
7,987,405	B2	7/2011	Turner et al.
7,988,026	B2	8/2011	Knodel et al.
7,988,027	B2	8/2011	Olson et al.
7,988,028	B2	8/2011	Farascioni et al.
7,992,757	B2	8/2011	Wheeler et al.
7,993,360	B2	8/2011	Hacker et al.
7,994,670	B2	8/2011	Ji
7,997,468	B2	8/2011	Farascioni
7,997,469	B2	8/2011	Olson et al.
8,002,696	B2	8/2011	Suzuki
8,002,784	B2	8/2011	Jinno et al.
8,002,785	B2	8/2011	Weiss et al.
8,002,795	B2	8/2011	Beetel
8,006,365	B2	8/2011	Levin et al.
8,006,885	B2	8/2011	Marczyk
8,006,889	B2	8/2011	Adams et al.
8,007,511	B2	8/2011	Brock et al.
8,011,550	B2	9/2011	Aranyi et al.
8,011,551	B2	9/2011	Marczyk et al.
8,011,553	B2	9/2011	Mastri et al.
8,011,555	B2	9/2011	Tarinelli et al.
8,012,170	B2	9/2011	Whitman et al.
8,016,176	B2	9/2011	Kasvikis et al.
8,016,177	B2	9/2011	Bettuchi et al.
8,016,178	B2	9/2011	Olson et al.
8,016,855	B2	9/2011	Whitman et al.
8,016,858	B2	9/2011	Whitman
8,016,881	B2	9/2011	Furst
8,020,742	B2	9/2011	Marczyk
8,020,743	B2	9/2011	Shelton, IV
8,021,375	B2	9/2011	Aldrich et al.
8,025,199	B2	9/2011	Whitman et al.
8,028,883	B2	10/2011	Stopek
8,028,884	B2	10/2011	Sniffin et al.
8,028,885	B2	10/2011	Smith et al.
8,034,077	B2	10/2011	Smith et al.
8,034,363	B2	10/2011	Li et al.
8,037,591	B2	10/2011	Spivey et al.
8,038,045	B2	10/2011	Bettuchi et al.
8,038,046	B2	10/2011	Smith et al.
8,038,686	B2	10/2011	Huitema et al.
8,043,207	B2	10/2011	Adams
8,043,328	B2	10/2011	Hahnen et al.
8,044,536	B2	10/2011	Nguyen et al.
8,047,236	B2	11/2011	Perry
8,048,503	B2	11/2011	Farnsworth et al.
8,056,787	B2	11/2011	Boudreaux et al.
8,056,788	B2	11/2011	Mastri et al.
8,057,508	B2	11/2011	Shelton, IV
8,058,771	B2	11/2011	Giordano et al.
8,060,250	B2	11/2011	Reiland et al.
8,061,576	B2	11/2011	Cappola
8,062,330	B2	11/2011	Prommersberger et al.
8,063,619	B2	11/2011	Zhu et al.
8,066,167	B2	11/2011	Measamer et al.
8,066,168	B2	11/2011	Vidal et al.
D650,074	S	12/2011	Hunt et al.
8,070,033	B2	12/2011	Milliman et al.
8,070,035	B2	12/2011	Holsten et al.
8,070,743	B2	12/2011	Kagan et al.
8,075,571	B2	12/2011	Vitali et al.
8,079,950	B2	12/2011	Stern et al.
8,080,004	B2	12/2011	Downey et al.
8,083,118	B2	12/2011	Milliman et al.
8,083,119	B2	12/2011	Prommersberger
8,083,120	B2	12/2011	Shelton, IV et al.
8,084,001	B2	12/2011	Burns et al.
8,085,013	B2	12/2011	Wei et al.
8,087,563	B2	1/2012	Milliman et al.
8,089,509	B2	1/2012	Chatenever et al.
8,091,756	B2	1/2012	Viola
8,092,443	B2	1/2012	Bischoff
8,092,932	B2	1/2012	Phillips et al.
8,096,458	B2	1/2012	Hessler
8,097,017	B2	1/2012	Viola
8,100,310	B2	1/2012	Zemlok
8,100,872	B2	1/2012	Patel
8,102,278	B2	1/2012	Deck et al.
8,105,350	B2	1/2012	Lee et al.
8,107,925	B2	1/2012	Natsuno et al.
8,108,072	B2	1/2012	Zhao et al.
8,109,426	B2	2/2012	Milliman et al.
8,110,208	B1	2/2012	Hen
8,113,405	B2	2/2012	Milliman
8,113,410	B2	2/2012	Hall et al.
8,114,100	B2	2/2012	Smith et al.
8,122,128	B2	2/2012	Burke
8,123,103	B2	2/2012	Milliman
8,123,766	B2	2/2012	Bauman et al.
8,123,767	B2	2/2012	Bauman et al.
8,125,168	B2	2/2012	Johnson et al.
8,127,975	B2	3/2012	Olson et al.
8,127,976	B2	3/2012	Scirica et al.
8,128,624	B2	3/2012	Couture et al.
8,128,643	B2	3/2012	Aranyi et al.
8,128,645	B2	3/2012	Sonnenschein et al.
8,132,703	B2	3/2012	Milliman et al.
8,132,706	B2	3/2012	Marczyk et al.
8,134,306	B2	3/2012	Drader et al.
8,136,712	B2	3/2012	Zingman
8,136,713	B2	3/2012	Hathaway et al.
8,137,339	B2	3/2012	Jinno et al.
8,140,417	B2	3/2012	Shibata
8,141,762	B2	3/2012	Bedi et al.
8,141,763	B2	3/2012	Milliman
8,142,425	B2	3/2012	Eggers
8,146,790	B2	4/2012	Milliman
8,147,485	B2	4/2012	Wham et al.
8,152,041	B2	4/2012	Kostrzewski
8,154,239	B2	4/2012	Katsuki et al.
8,157,145	B2	4/2012	Shelton, IV et al.
8,157,148	B2	4/2012	Scirica

(56) **References Cited**

U.S. PATENT DOCUMENTS

8,157,151 B2 4/2012 Ingmanson et al.
8,157,152 B2 4/2012 Holsten et al.
8,157,153 B2 4/2012 Shelton, IV et al.
8,157,793 B2 4/2012 Omori et al.
8,161,977 B2 4/2012 Shelton, IV et al.
8,162,138 B2 4/2012 Bettenhausen et al.
8,162,197 B2 4/2012 Mastri et al.
8,167,185 B2 5/2012 Shelton, IV et al.
8,167,895 B2 5/2012 D'Agostino et al.
8,167,898 B1 5/2012 Schaller et al.
8,170,241 B2 5/2012 Roe et al.
8,172,120 B2 5/2012 Boyden et al.
8,172,122 B2 5/2012 Kasvikis et al.
8,172,124 B2 5/2012 Shelton, IV et al.
8,177,797 B2 5/2012 Shimoji et al.
8,179,705 B2 5/2012 Chapuis
8,180,458 B2 5/2012 Kane et al.
8,181,840 B2 5/2012 Milliman
8,186,555 B2 5/2012 Shelton, IV et al.
8,186,560 B2 5/2012 Hess et al.
8,191,752 B2 6/2012 Scirica
8,192,460 B2 6/2012 Orban, III et al.
8,196,795 B2 6/2012 Moore et al.
8,196,796 B2 6/2012 Shelton, IV et al.
8,197,501 B2 6/2012 Shadeck et al.
8,197,502 B2 6/2012 Smith et al.
8,201,720 B2 6/2012 Hessler
8,201,721 B2 6/2012 Zemlok et al.
8,205,779 B2 6/2012 Ma
8,205,780 B2 6/2012 Sorrentino et al.
8,205,781 B2 6/2012 Baxter, III et al.
8,210,411 B2 7/2012 Yates et al.
8,210,414 B2 7/2012 Bettuchi et al.
8,210,415 B2 7/2012 Ward
8,210,416 B2 7/2012 Milliman et al.
8,211,125 B2 7/2012 Spivey
8,214,019 B2 7/2012 Govari et al.
8,215,531 B2 7/2012 Shelton, IV et al.
8,215,533 B2 7/2012 Viola et al.
8,220,468 B2 7/2012 Cooper et al.
8,220,688 B2 7/2012 Laurent et al.
8,220,690 B2 7/2012 Hess et al.
8,221,424 B2 7/2012 Cha
8,225,799 B2 7/2012 Bettuchi
8,226,715 B2 7/2012 Hwang et al.
8,227,946 B2 7/2012 Kim
8,228,048 B2 7/2012 Spencer
8,231,040 B2 7/2012 Zemlok et al.
8,231,041 B2 7/2012 Marczyk et al.
8,231,042 B2 7/2012 Hessler et al.
8,231,043 B2 7/2012 Tarinelli et al.
8,236,010 B2 8/2012 Ortiz et al.
8,241,271 B2 8/2012 Millman et al.
8,241,308 B2 8/2012 Kortenbach et al.
8,241,322 B2 8/2012 Whitman et al.
8,245,594 B2 8/2012 Rogers et al.
8,245,898 B2 8/2012 Smith et al.
8,245,899 B2 8/2012 Swensgard et al.
8,245,900 B2 8/2012 Scirica
8,245,901 B2 8/2012 Stopek
8,246,637 B2 8/2012 Viola et al.
8,256,654 B2 9/2012 Bettuchi et al.
8,256,655 B2 9/2012 Sniffin et al.
8,256,656 B2 9/2012 Milliman et al.
8,257,251 B2 9/2012 Shelton, IV et al.
8,257,356 B2 9/2012 Bleich et al.
8,257,391 B2 9/2012 Orban, III et al.
8,262,655 B2 9/2012 Ghabrial et al.
8,267,300 B2 9/2012 Boudreaux
8,267,924 B2 9/2012 Zemlok et al.
8,267,946 B2 9/2012 Whitfield et al.
8,267,951 B2 9/2012 Whayne et al.
8,269,121 B2 9/2012 Smith
8,272,553 B2 9/2012 Mastri et al.
8,272,554 B2 9/2012 Whitman et al.
8,273,404 B2 9/2012 Dave et al.
8,276,801 B2 10/2012 Zemlok et al.
8,276,802 B2 10/2012 Kostrzewski
8,277,473 B2 10/2012 Sunaoshi et al.
8,281,973 B2 10/2012 Wenchell et al.
8,281,974 B2 10/2012 Hessler et al.
8,282,654 B2 10/2012 Ferrari et al.
8,286,845 B2 10/2012 Perry et al.
8,287,561 B2 10/2012 Nunez et al.
8,292,147 B2 10/2012 Viola
8,292,150 B2 10/2012 Bryant
8,292,151 B2 10/2012 Viola
8,292,152 B2 10/2012 Milliman et al.
8,292,155 B2 10/2012 Shelton, IV et al.
8,292,157 B2 10/2012 Smith et al.
8,292,888 B2 10/2012 Whitman
8,298,161 B2 10/2012 Vargas
8,298,677 B2 10/2012 Wiesner et al.
8,302,323 B2 11/2012 Fortier et al.
8,308,040 B2 11/2012 Huang et al.
8,308,042 B2 11/2012 Aranyi
8,308,046 B2 11/2012 Prommersberger
8,308,659 B2 11/2012 Scheibe et al.
8,313,496 B2 11/2012 Sauer et al.
8,313,509 B2 11/2012 Kostrzewski
8,317,070 B2 11/2012 Hueil et al.
8,317,071 B1 11/2012 Knodel
8,317,074 B2 11/2012 Ortiz et al.
8,317,790 B2 11/2012 Bell et al.
8,319,002 B2 11/2012 Daniels et al.
8,322,455 B2 12/2012 Shelton, IV et al.
8,322,589 B2 12/2012 Boudreaux
8,322,590 B2 12/2012 Patel et al.
8,323,789 B2 12/2012 Rozhin et al.
8,328,061 B2 12/2012 Kasvikis
8,328,062 B2 12/2012 Viola
8,328,063 B2 12/2012 Milliman et al.
8,328,064 B2 12/2012 Racenet et al.
8,328,802 B2 12/2012 Deville et al.
8,328,823 B2 12/2012 Aranyi et al.
8,333,313 B2 12/2012 Boudreaux et al.
8,333,764 B2 12/2012 Francischelli et al.
8,336,753 B2 12/2012 Olson et al.
8,336,754 B2 12/2012 Cappola et al.
8,342,377 B2 1/2013 Milliman et al.
8,342,378 B2 1/2013 Marczyk et al.
8,342,379 B2 1/2013 Whitman et al.
8,348,123 B2 1/2013 Scirica et al.
8,348,125 B2 1/2013 Viola et al.
8,348,126 B2 1/2013 Olson et al.
8,348,127 B2 1/2013 Marczyk
8,348,129 B2 1/2013 Bedi et al.
8,348,130 B2 1/2013 Shah et al.
8,348,131 B2 1/2013 Ornaits et al.
8,348,972 B2 1/2013 Soltz et al.
8,353,437 B2 1/2013 Boudreaux
8,353,438 B2 1/2013 Baxter, III et al.
8,353,439 B2 1/2013 Baxter, III et al.
8,356,740 B1 1/2013 Knodel
8,357,144 B2 1/2013 Whitman et al.
8,360,296 B2 1/2013 Zingman
8,360,297 B2 1/2013 Shelton, IV et al.
8,360,298 B2 1/2013 Farascioni et al.
8,360,299 B2 1/2013 Zemlok et al.
8,361,501 B2 1/2013 DiTizio et al.
8,365,973 B1 2/2013 White et al.
8,365,975 B1 2/2013 Manoux et al.
8,365,976 B2 2/2013 Hess et al.
8,366,559 B2 2/2013 Papenfuss et al.
8,371,491 B2 2/2013 Huitema et al.
8,371,492 B2 2/2013 Aranyi et al.
8,371,493 B2 2/2013 Aranyi et al.
8,372,094 B2 2/2013 Bettuchi et al.
8,376,865 B2 2/2013 Forster et al.
8,377,044 B2 2/2013 Coe et al.
8,388,633 B2 3/2013 Rousseau et al.
8,389,588 B2 3/2013 Ringelsen
8,393,513 B2 3/2013 Jankowski
8,393,514 B2 3/2013 Shelton, IV et al.

(56) **References Cited**

U.S. PATENT DOCUMENTS

8,393,516 B2 3/2013 Kostrzewski
8,397,971 B2 3/2013 Yates et al.
8,398,633 B2 3/2013 Mueller
8,398,673 B2 3/2013 Hinchliffe et al.
8,403,138 B2 3/2013 Weisshaupt et al.
8,403,198 B2 3/2013 Sorrentino et al.
8,403,832 B2 3/2013 Cunningham et al.
8,403,945 B2 3/2013 Whitfield et al.
8,408,439 B2 4/2013 Huang et al.
8,408,442 B2 4/2013 Racenet et al.
8,409,079 B2 4/2013 Oakamoto et al.
8,409,174 B2 4/2013 Omori
8,409,222 B2 4/2013 Whitfield et al.
8,409,223 B2 4/2013 Sorrentino et al.
8,413,870 B2 4/2013 Pastorelli et al.
8,413,871 B2 4/2013 Racenet et al.
8,413,872 B2 4/2013 Patel
8,414,577 B2 4/2013 Boudreaux et al.
8,418,909 B2 4/2013 Kostrzewski
8,424,737 B2 4/2013 Scirica
8,424,739 B2 4/2013 Racenet et al.
8,424,740 B2 4/2013 Shelton, IV et al.
8,424,741 B2 4/2013 McGuckin, Jr. et al.
8,425,600 B2 4/2013 Maxwell
8,430,292 B2 4/2013 Patel et al.
8,430,892 B2 4/2013 Bindra et al.
8,430,898 B2 4/2013 Wiener et al.
8,435,257 B2 5/2013 Smith et al.
8,439,246 B1 5/2013 Knodel et al.
8,444,036 B2 5/2013 Shelton, IV
8,444,549 B2 5/2013 Viola et al.
8,453,904 B2 6/2013 Eskaros et al.
8,453,906 B2 6/2013 Huang et al.
8,453,907 B2 6/2013 Laurent et al.
8,453,908 B2 6/2013 Bedi et al.
8,453,912 B2 6/2013 Mastri et al.
8,453,914 B2 6/2013 Laurent et al.
8,454,628 B2 6/2013 Smith et al.
8,457,757 B2 6/2013 Cauller et al.
8,459,520 B2 6/2013 Giordano et al.
8,459,525 B2 6/2013 Yates et al.
8,464,922 B2 6/2013 Marczyk
8,464,923 B2 6/2013 Shelton, IV
8,464,924 B2 6/2013 Gresham et al.
8,464,925 B2 6/2013 Hull et al.
8,465,502 B2 6/2013 Zergiebel
8,469,973 B2 6/2013 Meade et al.
8,474,677 B2 7/2013 Woodard, Jr. et al.
8,475,453 B2 7/2013 Marczyk et al.
8,475,474 B2 7/2013 Bombard et al.
8,479,969 B2 7/2013 Shelton, IV
8,480,703 B2 7/2013 Nicholas et al.
8,485,412 B2 7/2013 Shelton, IV et al.
8,485,413 B2 7/2013 Scheib et al.
8,490,853 B2 7/2013 Criscuolo et al.
8,491,581 B2 7/2013 Deville et al.
8,496,156 B2 7/2013 Sniffin et al.
8,496,683 B2 7/2013 Prommersberger et al.
8,499,992 B2 8/2013 Whitman et al.
8,499,993 B2 8/2013 Shelton, IV et al.
8,500,762 B2 8/2013 Sholev et al.
8,506,557 B2 8/2013 Zemlok et al.
8,506,580 B2 8/2013 Zergiebel et al.
8,506,581 B2 8/2013 Wingardner, III et al.
8,511,308 B2 8/2013 Hecox et al.
8,512,359 B2 8/2013 Whitman et al.
8,517,239 B2 8/2013 Scheib et al.
8,517,241 B2 8/2013 Nicholas et al.
8,517,243 B2 8/2013 Giordano et al.
8,517,244 B2 8/2013 Shelton, IV et al.
8,521,273 B2 8/2013 Kliman
8,523,043 B2 9/2013 Ullrich et al.
8,523,881 B2 9/2013 Cabiri et al.
8,523,900 B2 9/2013 Jinno et al.
8,529,588 B2 9/2013 Ahlberg et al.
8,529,600 B2 9/2013 Woodard, Jr. et al.
8,529,819 B2 9/2013 Ostapoff et al.
8,534,528 B2 9/2013 Shelton, IV
8,535,304 B2 9/2013 Sklar et al.
8,540,128 B2 9/2013 Shelton, IV et al.
8,540,129 B2 9/2013 Baxter, III et al.
8,540,130 B2 9/2013 Moore et al.
8,540,131 B2 9/2013 Swayze
8,540,133 B2 9/2013 Bedi et al.
8,540,733 B2 9/2013 Whitman et al.
8,540,735 B2 9/2013 Mitelberg et al.
8,551,076 B2 10/2013 Duval et al.
8,556,151 B2 10/2013 Viola
8,556,918 B2 10/2013 Bauman et al.
8,561,870 B2 10/2013 Baxter et al.
8,561,873 B2 10/2013 Ingmanson et al.
8,567,656 B2 10/2013 Shelton, IV et al.
8,573,461 B2 11/2013 Shelton, IV et al.
8,573,465 B2 11/2013 Shelton, IV et al.
8,574,199 B2 11/2013 von Bülow et al.
8,574,263 B2 11/2013 Mueller
8,575,880 B2 11/2013 Grantz
8,579,176 B2 11/2013 Smith et al.
8,579,178 B2 11/2013 Holsten et al.
8,579,897 B2 11/2013 Vakharia et al.
8,579,937 B2 11/2013 Gresham
8,584,919 B2 11/2013 Hueil et al.
8,585,721 B2 11/2013 Kirsch
8,590,762 B2 11/2013 Hess et al.
8,602,287 B2 12/2013 Yates et al.
8,602,288 B2 12/2013 Shelton, IV et al.
8,603,135 B2 12/2013 Mueller
8,608,044 B2 12/2013 Hueil et al.
8,608,045 B2 12/2013 Smith et al.
8,608,046 B2 12/2013 Laurent et al.
8,608,745 B2 12/2013 Guzman et al.
8,613,383 B2 12/2013 Beckman et al.
8,616,431 B2 12/2013 Timm et al.
8,622,274 B2 1/2014 Yates et al.
8,622,275 B2 1/2014 Baxter, III et al.
8,628,518 B2 1/2014 Blumenkranz et al.
8,628,545 B2 1/2014 Cabrera et al.
8,631,987 B2 1/2014 Shelton, IV et al.
8,632,462 B2 1/2014 Yoo et al.
8,632,525 B2 1/2014 Kerr et al.
8,632,535 B2 1/2014 Shelton, IV et al.
8,632,563 B2 1/2014 Nagase et al.
8,636,187 B2 1/2014 Hueil et al.
8,636,736 B2 1/2014 Yates et al.
8,636,766 B2 1/2014 Milliman et al.
8,640,788 B2 2/2014 Dachs, II et al.
8,647,258 B2 2/2014 Aranyi et al.
8,652,151 B2 2/2014 Lehman et al.
8,657,174 B2 2/2014 Yates et al.
8,657,176 B2 2/2014 Shelton, IV et al.
8,657,177 B2 2/2014 Scirica et al.
8,657,178 B2 2/2014 Hueil et al.
8,657,482 B2 2/2014 Malackowski et al.
8,657,808 B2 2/2014 McPherson et al.
8,662,370 B2 3/2014 Takei
8,663,192 B2 3/2014 Hester et al.
8,668,129 B2 3/2014 Olson
8,668,130 B2 3/2014 Hess et al.
8,672,206 B2 3/2014 Aranyi et al.
8,672,207 B2 3/2014 Shelton, IV et al.
8,672,208 B2 3/2014 Hess et al.
8,673,210 B2 3/2014 Deshays
8,678,263 B2 3/2014 Viola
8,679,093 B2 3/2014 Farra
8,679,098 B2 3/2014 Hart
8,679,137 B2 3/2014 Bauman et al.
8,679,454 B2 3/2014 Guire et al.
8,684,250 B2 4/2014 Bettuchi et al.
8,684,253 B2 4/2014 Giordano et al.
8,685,020 B2 4/2014 Weizman et al.
8,695,866 B2 4/2014 Leimbach et al.
8,696,665 B2 4/2014 Hunt et al.
8,701,958 B2 4/2014 Shelton, IV et al.
8,701,959 B2 4/2014 Shah

(56) **References Cited**

U.S. PATENT DOCUMENTS

8,708,211 B2 4/2014 Zemlok et al.
8,708,213 B2 4/2014 Shelton, IV et al.
8,715,256 B2 5/2014 Greener
8,720,766 B2 5/2014 Hess et al.
8,721,630 B2 5/2014 Ortiz et al.
8,721,666 B2 5/2014 Schroeder et al.
8,727,197 B2 5/2014 Hess et al.
8,727,200 B2 5/2014 Roy
8,728,119 B2 5/2014 Cummins
8,733,613 B2 5/2014 Huitema et al.
8,733,614 B2 5/2014 Ross et al.
8,734,478 B2 5/2014 Widenhouse et al.
8,739,033 B2 5/2014 Rosenberg
8,740,034 B2 6/2014 Morgan et al.
8,740,037 B2 6/2014 Shelton, IV et al.
8,740,038 B2 6/2014 Shelton, IV et al.
8,740,987 B2 6/2014 Geremakis et al.
8,746,529 B2 6/2014 Shelton, IV et al.
8,746,530 B2 6/2014 Giordano et al.
8,746,533 B2 6/2014 Whitman et al.
8,746,535 B2 6/2014 Shelton, IV et al.
8,747,238 B2 6/2014 Shelton, IV et al.
8,752,264 B2 6/2014 Ackley et al.
8,752,699 B2 6/2014 Morgan et al.
8,752,747 B2 6/2014 Shelton, IV et al.
8,752,749 B2 6/2014 Moore et al.
8,757,465 B2 6/2014 Woodard, Jr. et al.
8,758,235 B2 6/2014 Jaworek
8,758,391 B2 6/2014 Swayze et al.
8,758,438 B2 6/2014 Boyce et al.
8,763,875 B2 7/2014 Morgan et al.
8,763,877 B2 7/2014 Schall et al.
8,763,879 B2 7/2014 Shelton, IV et al.
8,771,169 B2 7/2014 Whitman et al.
8,777,004 B2 7/2014 Shelton, IV et al.
8,783,541 B2 7/2014 Shelton, IV et al.
8,783,542 B2 7/2014 Riestenberg et al.
8,783,543 B2 7/2014 Shelton, IV et al.
8,784,404 B2 7/2014 Doyle et al.
8,784,415 B2 7/2014 Malackowski et al.
8,789,737 B2 7/2014 Hodgkinson et al.
8,789,739 B2 7/2014 Swensgard
8,789,740 B2 7/2014 Baxter, III et al.
8,789,741 B2 7/2014 Baxter, III et al.
8,790,684 B2 7/2014 Dave et al.
8,794,496 B2 8/2014 Scirica
8,794,497 B2 8/2014 Zingman
8,795,276 B2 8/2014 Dietz et al.
8,800,838 B2 8/2014 Shelton, IV
8,800,839 B2 8/2014 Beetel
8,800,841 B2 8/2014 Ellerhorst et al.
8,801,734 B2 8/2014 Shelton, IV et al.
8,801,735 B2 8/2014 Shelton, IV et al.
8,801,752 B2 8/2014 Fortier et al.
8,806,973 B2 8/2014 Ross et al.
8,807,414 B2 8/2014 Ross et al.
8,808,294 B2 8/2014 Fox et al.
8,808,308 B2 8/2014 Boukhny et al.
8,808,311 B2 8/2014 Heinrich et al.
8,813,866 B2 8/2014 Suzuki
8,814,024 B2 8/2014 Woodard, Jr. et al.
8,814,025 B2 8/2014 Miller et al.
8,820,603 B2 9/2014 Shelton, IV et al.
8,820,605 B2 9/2014 Shelton, IV
8,820,606 B2 9/2014 Hodgkinson
8,820,607 B2 9/2014 Marczyk
8,822,934 B2 9/2014 Sayeh et al.
8,827,133 B2 9/2014 Shelton, IV et al.
8,827,903 B2 9/2014 Shelton, IV et al.
8,833,632 B2 9/2014 Swensgard
8,840,003 B2 9/2014 Morgan et al.
8,840,603 B2 9/2014 Shelton, IV et al.
8,844,789 B2 9/2014 Shelton, IV et al.
8,851,354 B2 10/2014 Swensgard et al.
8,852,199 B2 10/2014 Deslauriers et al.
8,857,693 B2 10/2014 Schuckmann et al.
8,857,694 B2 10/2014 Shelton, IV et al.
8,858,571 B2 10/2014 Shelton, IV et al.
8,858,590 B2 10/2014 Shelton, IV et al.
8,864,007 B2 10/2014 Widenhouse et al.
8,864,009 B2 10/2014 Shelton, IV et al.
8,870,050 B2 10/2014 Hodgkinson
8,875,971 B2 11/2014 Hall et al.
8,875,972 B2 11/2014 Weisenburgh, II et al.
8,876,857 B2 11/2014 Burbank
8,888,688 B2 11/2014 Julian et al.
8,893,946 B2 11/2014 Boudreaux et al.
8,893,949 B2 11/2014 Shelton, IV et al.
8,894,647 B2 11/2014 Beardsley et al.
8,894,654 B2 11/2014 Anderson
8,899,463 B2 12/2014 Schall et al.
8,899,464 B2 12/2014 Hueil et al.
8,899,465 B2 12/2014 Shelton, IV et al.
8,899,466 B2 12/2014 Baxter, III et al.
8,905,977 B2 12/2014 Shelton et al.
8,911,426 B2 12/2014 Coppeta et al.
8,911,471 B2 12/2014 Spivey et al.
8,920,438 B2 12/2014 Aranyi et al.
8,925,782 B2 1/2015 Shelton, IV
8,925,783 B2 1/2015 Zemlok et al.
8,925,788 B2 1/2015 Hess et al.
8,926,598 B2 1/2015 Mollere et al.
8,931,682 B2 1/2015 Timm et al.
8,936,614 B2 1/2015 Allen, IV
8,939,343 B2 1/2015 Milliman et al.
8,939,344 B2 1/2015 Olson et al.
8,955,732 B2 2/2015 Zemlok et al.
8,956,342 B1 2/2015 Russo et al.
8,960,520 B2 2/2015 McCuen
8,960,521 B2 2/2015 Kostrzewski
8,961,504 B2 2/2015 Hoarau et al.
8,967,443 B2 3/2015 McCuen
8,967,446 B2 3/2015 Beardsley et al.
8,968,276 B2 3/2015 Zemlok et al.
8,968,312 B2 3/2015 Marczyk et al.
8,968,337 B2 3/2015 Whitfield et al.
8,968,340 B2 3/2015 Chowaniec et al.
8,970,507 B2 3/2015 Holbein et al.
8,973,803 B2 3/2015 Hall et al.
8,973,804 B2 3/2015 Hess et al.
8,978,954 B2 3/2015 Shelton, IV et al.
8,978,955 B2 3/2015 Aronhalt et al.
8,978,956 B2 3/2015 Schall et al.
8,979,890 B2 3/2015 Boudreaux
8,982,195 B2 3/2015 Claus et al.
8,991,676 B2 3/2015 Hess et al.
8,991,677 B2 3/2015 Moore et al.
8,992,422 B2 3/2015 Spivey et al.
8,992,565 B2 3/2015 Brisson et al.
8,996,165 B2 3/2015 Wang et al.
8,998,058 B2 4/2015 Moore et al.
9,005,230 B2 4/2015 Yates et al.
9,011,471 B2 4/2015 Timm et al.
9,016,539 B2 4/2015 Kostrzewski et al.
9,016,540 B2 4/2015 Whitman et al.
9,016,542 B2 4/2015 Shelton, IV et al.
9,017,331 B2 4/2015 Fox
9,017,371 B2 4/2015 Whitman et al.
9,023,014 B2 5/2015 Chowaniec et al.
9,027,817 B2 5/2015 Milliman et al.
9,028,494 B2 5/2015 Shelton, IV et al.
9,028,495 B2 5/2015 Mueller et al.
9,028,519 B2 5/2015 Yates et al.
9,033,203 B2 5/2015 Woodard, Jr. et al.
9,033,204 B2 5/2015 Shelton, IV et al.
9,038,881 B1 5/2015 Schaller et al.
9,039,690 B2 5/2015 Kersten et al.
9,039,720 B2 5/2015 Madan
9,043,027 B2 5/2015 Durant et al.
9,044,227 B2 6/2015 Shelton, IV et al.
9,044,228 B2 6/2015 Woodard, Jr. et al.
9,044,230 B2 6/2015 Morgan et al.
9,050,083 B2 6/2015 Yates et al.
9,050,084 B2 6/2015 Schmid et al.

(56) **References Cited**

U.S. PATENT DOCUMENTS

9,050,100 B2 6/2015 Yates et al.
9,055,941 B2 6/2015 Schmid et al.
9,055,944 B2 6/2015 Hodgkinson et al.
9,055,961 B2 6/2015 Manzo et al.
9,060,770 B2 6/2015 Shelton, IV et al.
9,072,515 B2 7/2015 Hall et al.
9,072,535 B2 7/2015 Shelton, IV et al.
9,072,536 B2 7/2015 Shelton, IV et al.
9,078,653 B2 7/2015 Leimbach et al.
9,084,601 B2 7/2015 Moore et al.
9,084,602 B2 7/2015 Glieman
9,086,875 B2 7/2015 Harrat et al.
9,089,330 B2 7/2015 Widenhouse et al.
9,095,339 B2 8/2015 Moore et al.
9,095,362 B2 8/2015 Dachs, II et al.
9,096,033 B2 8/2015 Holop et al.
9,099,863 B2 8/2015 Smith et al.
9,101,358 B2 8/2015 Kerr et al.
9,101,385 B2 8/2015 Shelton, IV et al.
9,107,663 B2 8/2015 Swensgard
9,113,862 B2 8/2015 Morgan et al.
9,113,864 B2 8/2015 Morgan et al.
9,113,865 B2 8/2015 Shelton, IV et al.
9,113,873 B2 8/2015 Marczyk et al.
9,113,874 B2 8/2015 Shelton, IV et al.
9,113,880 B2 8/2015 Zemlok et al.
9,113,883 B2 8/2015 Aronhalt et al.
9,113,884 B2 8/2015 Shelton, IV et al.
9,119,657 B2 9/2015 Shelton, IV et al.
9,123,286 B2 9/2015 Park
9,125,654 B2 9/2015 Aronhalt et al.
9,125,662 B2 9/2015 Shelton, IV
9,126,317 B2 9/2015 Lawton et al.
9,131,940 B2 9/2015 Huitema et al.
9,131,957 B2 9/2015 Sharbnik et al.
9,138,225 B2 9/2015 Huang et al.
9,149,274 B2 10/2015 Spivey et al.
9,149,324 B2 10/2015 Huang et al.
9,149,325 B2 10/2015 Worrell et al.
9,161,753 B2 10/2015 Prior
9,161,803 B2 10/2015 Yates et al.
9,168,038 B2 10/2015 Shelton, IV et al.
9,168,054 B2 10/2015 Turner et al.
9,168,144 B2 10/2015 Rivin et al.
9,179,911 B2 11/2015 Morgan et al.
9,179,912 B2 11/2015 Yates et al.
9,186,143 B2 11/2015 Timm et al.
9,186,148 B2 11/2015 Felder et al.
9,192,380 B2 11/2015 Racenet et al.
9,192,384 B2 11/2015 Bettuchi
9,193,045 B2 11/2015 Saur et al.
9,198,661 B2 12/2015 Swensgard
9,198,662 B2 12/2015 Barton et al.
9,204,877 B2 12/2015 Whitman et al.
9,204,878 B2 12/2015 Hall et al.
9,204,879 B2 12/2015 Shelton, IV
9,204,880 B2 12/2015 Baxter, III et al.
9,211,120 B2 12/2015 Scheib et al.
9,211,121 B2 12/2015 Hall et al.
9,211,122 B2 12/2015 Hagerty et al.
9,216,019 B2 12/2015 Schmid et al.
9,216,020 B2 12/2015 Zhang et al.
9,220,500 B2 12/2015 Swayze et al.
9,220,501 B2 12/2015 Baxter, III et al.
9,226,750 B2 1/2016 Weir et al.
9,226,751 B2 1/2016 Shelton, IV et al.
9,226,767 B2 1/2016 Stulen et al.
9,232,941 B2 1/2016 Mandakolathur Vasudevan et al.
9,232,945 B2 1/2016 Zingman
9,232,979 B2 1/2016 Parihar et al.
9,237,891 B2 1/2016 Shelton, IV
9,241,714 B2 1/2016 Timm et al.
9,259,274 B2 2/2016 Prisco
9,271,799 B2 3/2016 Shelton, IV et al.
9,272,406 B2 3/2016 Aronhalt et al.
9,277,919 B2 3/2016 Timmer et al.
9,277,922 B2 3/2016 Carter et al.
9,282,962 B2 3/2016 Schmid et al.
9,282,966 B2 3/2016 Shelton, IV et al.
9,282,974 B2 3/2016 Shelton, IV
9,283,045 B2 3/2016 Rhee et al.
9,283,054 B2 3/2016 Morgan et al.
9,289,206 B2 3/2016 Hess et al.
9,289,207 B2 3/2016 Shelton, IV
9,289,210 B2 3/2016 Baxter, III et al.
9,289,212 B2 3/2016 Shelton, IV et al.
9,289,225 B2 3/2016 Shelton, IV et al.
9,289,256 B2 3/2016 Shelton, IV et al.
9,293,757 B2 3/2016 Chellew
9,295,464 B2 3/2016 Shelton, IV et al.
9,301,752 B2 4/2016 Vasudevan et al.
9,301,753 B2 4/2016 Aldridge et al.
9,301,755 B2 4/2016 Shelton, IV et al.
9,301,759 B2 4/2016 Spivey et al.
9,307,965 B2 4/2016 Ming et al.
9,307,986 B2 4/2016 Hall et al.
9,307,988 B2 4/2016 Shelton, IV
9,308,011 B2 4/2016 Chao et al.
9,314,246 B2 4/2016 Shelton, IV et al.
9,320,518 B2 4/2016 Henderson et al.
9,320,520 B2 4/2016 Shelton, IV et al.
9,320,521 B2 4/2016 Shelton, IV et al.
9,320,523 B2 4/2016 Shelton, IV et al.
9,326,767 B2 5/2016 Koch, Jr. et al.
9,326,768 B2 5/2016 Shelton, IV
9,326,769 B2 5/2016 Shelton, IV et al.
9,326,770 B2 5/2016 Shelton, IV et al.
9,326,771 B2 5/2016 Baxter, III et al.
9,332,890 B2 5/2016 Ozawa
9,332,974 B2 5/2016 Henderson et al.
9,332,984 B2 5/2016 Weaner et al.
9,332,987 B2 5/2016 Leimbach et al.
9,345,477 B2 5/2016 Anim et al.
9,345,481 B2 5/2016 Hall et al.
9,351,726 B2 5/2016 Leimbach et al.
9,351,727 B2 5/2016 Leimbach et al.
9,351,730 B2 5/2016 Schmid et al.
9,358,003 B2 6/2016 Hall et al.
9,358,005 B2 6/2016 Shelton, IV et al.
9,364,220 B2 6/2016 Williams
9,364,230 B2 6/2016 Shelton, IV et al.
9,364,233 B2 6/2016 Alexander, III et al.
9,370,358 B2 6/2016 Shelton, IV et al.
9,370,364 B2 6/2016 Smith et al.
9,375,206 B2 6/2016 Vidal et al.
9,386,983 B2 7/2016 Swensgard et al.
9,386,984 B2 7/2016 Aronhalt et al.
9,386,988 B2 7/2016 Baxter, III et al.
9,393,015 B2 7/2016 Laurent et al.
9,398,911 B2 7/2016 Auld
9,402,626 B2 8/2016 Ortiz et al.
9,408,604 B2 8/2016 Shelton, IV et al.
9,408,606 B2 8/2016 Shelton, IV
9,414,838 B2 8/2016 Shelton, IV et al.
9,414,849 B2 8/2016 Nagashimada
9,433,419 B2 9/2016 Gonzalez et al.
9,445,813 B2 9/2016 Shelton, IV et al.
9,451,958 B2 9/2016 Shelton, IV et al.
9,468,438 B2 10/2016 Baber et al.
9,468,447 B2 10/2016 Aman et al.
9,480,476 B2 11/2016 Aldridge et al.
9,526,564 B2 12/2016 Rusin
9,554,794 B2 1/2017 Baber et al.
9,597,104 B2 3/2017 Nicholas et al.
9,597,143 B2 3/2017 Madan et al.
9,629,623 B2 4/2017 Lytle, IV et al.
9,629,629 B2 4/2017 Leimbach et al.
9,687,230 B2 6/2017 Leimbach et al.
9,693,777 B2 7/2017 Schellin et al.
9,700,309 B2 7/2017 Jaworek et al.
9,724,094 B2 8/2017 Baber et al.
9,737,301 B2 8/2017 Baber et al.
9,743,927 B2 8/2017 Whitman
9,757,124 B2 9/2017 Schellin et al.

(56) **References Cited**

U.S. PATENT DOCUMENTS

9,757,128 B2 9/2017 Baber et al.
9,770,245 B2 9/2017 Swayze et al.
9,775,608 B2 10/2017 Aronhalt et al.
9,775,610 B2 10/2017 Nicholas et al.
9,782,169 B2 10/2017 Swayze et al.
9,788,836 B2 10/2017 Overmyer et al.
9,808,244 B2 11/2017 Leimbach et al.
9,839,422 B2 12/2017 Schellin et al.
9,839,423 B2 12/2017 Vendely et al.
9,844,374 B2 12/2017 Lytle, IV et al.
9,844,375 B2 12/2017 Overmyer et al.
9,872,683 B2 1/2018 Hopkins et al.
2001/0025183 A1 9/2001 Shahidi
2001/0044637 A1 11/2001 Jacobs et al.
2002/0014510 A1 2/2002 Richter et al.
2002/0022836 A1 2/2002 Goble et al.
2002/0026126 A1 2/2002 Burdorff et al.
2002/0029032 A1 3/2002 Arkin
2002/0029036 A1 3/2002 Goble et al.
2002/0049472 A1 4/2002 Coleman et al.
2002/0095175 A1 7/2002 Brock et al.
2002/0103494 A1 8/2002 Pacey
2002/0117534 A1 8/2002 Green et al.
2002/0127265 A1 9/2002 Bowman et al.
2002/0128552 A1 9/2002 Nowlin et al.
2002/0134811 A1 9/2002 Napier et al.
2002/0135474 A1 9/2002 Sylliassen
2002/0143340 A1 10/2002 Kaneko
2002/0157481 A1 10/2002 Kogiso et al.
2002/0165541 A1 11/2002 Whitman
2002/0188170 A1 12/2002 Santamore et al.
2002/0193808 A1 12/2002 Belef et al.
2003/0023316 A1 1/2003 Brown et al.
2003/0066858 A1 4/2003 Holgersson
2003/0078647 A1 4/2003 Vallana et al.
2003/0084983 A1 5/2003 Rangachari et al.
2003/0093103 A1 5/2003 Malackowski et al.
2003/0096158 A1 5/2003 Takano et al.
2003/0105478 A1 6/2003 Whitman et al.
2003/0114851 A1 6/2003 Truckai et al.
2003/0130677 A1 7/2003 Whitman et al.
2003/0139741 A1 7/2003 Goble et al.
2003/0153908 A1 8/2003 Goble et al.
2003/0153968 A1 8/2003 Geis et al.
2003/0163085 A1 8/2003 Tanner et al.
2003/0181900 A1 9/2003 Long
2003/0195387 A1 10/2003 Kortenbach et al.
2003/0205029 A1 11/2003 Chapolini et al.
2003/0216732 A1 11/2003 Truckai et al.
2003/0220660 A1 11/2003 Kortenbach et al.
2003/0236505 A1 12/2003 Bonadio et al.
2004/0002726 A1 1/2004 Nunez et al.
2004/0006335 A1 1/2004 Garrison
2004/0006340 A1 1/2004 Latterell et al.
2004/0006372 A1 1/2004 Racenet et al.
2004/0006861 A1 1/2004 Haytayan
2004/0030333 A1 2/2004 Goble
2004/0032345 A1 2/2004 Kazuya et al.
2004/0034357 A1 2/2004 Beane et al.
2004/0034369 A1 2/2004 Sauer et al.
2004/0044364 A1 3/2004 DeVries et al.
2004/0068161 A1 4/2004 Couvillon, Jr.
2004/0068224 A1 4/2004 Couvillon, Jr. et al.
2004/0068307 A1 4/2004 Goble
2004/0070369 A1 4/2004 Sakahibara
2004/0073222 A1 4/2004 Koseki
2004/0078037 A1 4/2004 Batchelor et al.
2004/0093024 A1 5/2004 Lousararian et al.
2004/0094597 A1 5/2004 Whitman et al.
2004/0097987 A1 5/2004 Pugsley et al.
2004/0098040 A1 5/2004 Taniguchi et al.
2004/0101822 A1 5/2004 Weisner et al.
2004/0102783 A1 5/2004 Sutterlin, III et al.
2004/0108357 A1 6/2004 Milliman et al.
2004/0110439 A1 6/2004 Chaikof et al.
2004/0111081 A1 6/2004 Whitman et al.
2004/0115022 A1 6/2004 Albertson et al.
2004/0116952 A1 6/2004 Sakurai et al.
2004/0133095 A1 7/2004 Dunki-Jacobs et al.
2004/0143297 A1 7/2004 Ramsey
2004/0147909 A1 7/2004 Johnston et al.
2004/0164123 A1 8/2004 Racenet et al.
2004/0167572 A1 8/2004 Roth et al.
2004/0173659 A1 9/2004 Green et al.
2004/0181219 A1 9/2004 Goble et al.
2004/0186470 A1 9/2004 Goble et al.
2004/0193189 A1 9/2004 Kortenbach et al.
2004/0199181 A1 10/2004 Knodel et al.
2004/0222268 A1 11/2004 Bilotti et al.
2004/0225186 A1 11/2004 Home, Jr. et al.
2004/0230214 A1 11/2004 Donofrio et al.
2004/0232201 A1 11/2004 Wenchell et al.
2004/0236352 A1 11/2004 Wang et al.
2004/0243147 A1 12/2004 Lipow
2004/0243151 A1 12/2004 Demmy et al.
2004/0243163 A1 12/2004 Casiano et al.
2004/0243176 A1 12/2004 Hahnen et al.
2004/0247415 A1 12/2004 Mangone, Jr.
2004/0254455 A1 12/2004 Iddan
2004/0254566 A1 12/2004 Plicchi et al.
2004/0254590 A1 12/2004 Hoffman et al.
2004/0254608 A1 12/2004 Huitema et al.
2004/0260315 A1 12/2004 Dell et al.
2004/0267297 A1 12/2004 Malackowski
2004/0267310 A1 12/2004 Racenet et al.
2005/0010158 A1 1/2005 Brugger et al.
2005/0010213 A1 1/2005 Stad et al.
2005/0032511 A1 2/2005 Malone et al.
2005/0033352 A1 2/2005 Zeph et al.
2005/0033357 A1 2/2005 Braun
2005/0054946 A1 3/2005 Krzyzanowski
2005/0058890 A1 3/2005 Brazell et al.
2005/0059997 A1 3/2005 Bauman et al.
2005/0070929 A1 3/2005 Dalessandro et al.
2005/0075561 A1 4/2005 Golden
2005/0080454 A1 4/2005 Drews et al.
2005/0085693 A1 4/2005 Belson et al.
2005/0090817 A1 4/2005 Phan
2005/0096683 A1 5/2005 Ellins et al.
2005/0103819 A1 5/2005 Racenet et al.
2005/0107814 A1 5/2005 Johnston et al.
2005/0107824 A1 5/2005 Hillstead et al.
2005/0113820 A1 5/2005 Goble et al.
2005/0116673 A1 6/2005 Carl et al.
2005/0119525 A1 6/2005 Takemoto
2005/0119669 A1 6/2005 Demmy
2005/0124855 A1 6/2005 Jaffe et al.
2005/0125009 A1 6/2005 Perry et al.
2005/0125897 A1 6/2005 Wyslucha et al.
2005/0131173 A1 6/2005 McDaniel et al.
2005/0131211 A1 6/2005 Bayley et al.
2005/0131390 A1* 6/2005 Heinrich A61B 17/0469 606/1
2005/0131436 A1 6/2005 Johnston et al.
2005/0131437 A1 6/2005 Johnston et al.
2005/0131457 A1 6/2005 Douglas et al.
2005/0137454 A1 6/2005 Saadat et al.
2005/0137455 A1 6/2005 Ewers et al.
2005/0143759 A1 6/2005 Kelly
2005/0143769 A1 6/2005 White et al.
2005/0145675 A1 7/2005 Hartwick et al.
2005/0150928 A1 7/2005 Kameyama et al.
2005/0154258 A1 7/2005 Tartaglia et al.
2005/0154406 A1 7/2005 Bombard et al.
2005/0159184 A1 7/2005 Kerner et al.
2005/0165419 A1 7/2005 Sauer et al.
2005/0165435 A1 7/2005 Johnston et al.
2005/0169974 A1 8/2005 Tenerz et al.
2005/0171522 A1 8/2005 Christopherson
2005/0177181 A1 8/2005 Kagan et al.
2005/0182298 A1 8/2005 Ikeda et al.
2005/0187545 A1 8/2005 Hooven et al.
2005/0187572 A1 8/2005 Johnston et al.
2005/0187576 A1 8/2005 Whitman et al.

(56) **References Cited**

U.S. PATENT DOCUMENTS

2005/0189397 A1 9/2005 Jankowski
2005/0192609 A1 9/2005 Whitman et al.
2005/0192628 A1 9/2005 Viola
2005/0203550 A1 9/2005 Laufer et al.
2005/0216055 A1 9/2005 Scirica et al.
2005/0228224 A1 10/2005 Okada et al.
2005/0240178 A1 10/2005 Morley et al.
2005/0240222 A1 10/2005 Shipp
2005/0245965 A1 11/2005 Orban, III et al.
2005/0251128 A1 11/2005 Amoah
2005/0256452 A1 11/2005 DeMarchi et al.
2005/0256522 A1 11/2005 Francischelli et al.
2005/0261676 A1 11/2005 Hall et al.
2005/0261677 A1 11/2005 Hall et al.
2005/0263563 A1 12/2005 Racenet et al.
2005/0267455 A1 12/2005 Eggers et al.
2005/0267530 A1 12/2005 Cummins
2005/0272973 A1 12/2005 Kawano et al.
2005/0274768 A1 12/2005 Cummins et al.
2005/0283188 A1 12/2005 Loshakove et al.
2006/0004407 A1 1/2006 Hiles et al.
2006/0008787 A1 1/2006 Hayman et al.
2006/0011699 A1 1/2006 Olson et al.
2006/0015009 A1 1/2006 Jaffe et al.
2006/0020247 A1 1/2006 Kagan et al.
2006/0020258 A1 1/2006 Strauss et al.
2006/0020336 A1 1/2006 Liddicoat
2006/0025811 A1 2/2006 Shelton, IV
2006/0025812 A1 2/2006 Shelton, IV
2006/0041188 A1 2/2006 Dirusso et al.
2006/0047275 A1 3/2006 Goble
2006/0047303 A1 3/2006 Ortiz et al.
2006/0047307 A1 3/2006 Ortiz et al.
2006/0049229 A1 3/2006 Milliman et al.
2006/0052825 A1 3/2006 Ransick et al.
2006/0060630 A1 3/2006 Shelton, IV et al.
2006/0064086 A1 3/2006 Odom
2006/0079115 A1 4/2006 Aranyi et al.
2006/0079735 A1 4/2006 Martone et al.
2006/0085031 A1 4/2006 Bettuchi
2006/0085033 A1 4/2006 Criscuolo et al.
2006/0086032 A1 4/2006 Valencic et al.
2006/0087746 A1 4/2006 Lipow
2006/0089535 A1 4/2006 Raz et al.
2006/0100643 A1 5/2006 Laufer et al.
2006/0100649 A1 5/2006 Hart
2006/0108393 A1 5/2006 Heinrich et al.
2006/0111711 A1 5/2006 Goble
2006/0111723 A1 5/2006 Chapolini et al.
2006/0116634 A1 6/2006 Shachar
2006/0122636 A1 6/2006 Bailly et al.
2006/0142772 A1 6/2006 Ralph et al.
2006/0149163 A1 7/2006 Hibner et al.
2006/0161185 A1 7/2006 Saadat et al.
2006/0167471 A1 7/2006 Phillips
2006/0173470 A1 8/2006 Oray et al.
2006/0178556 A1 8/2006 Hasser et al.
2006/0180634 A1 8/2006 Shelton, IV et al.
2006/0185682 A1 8/2006 Marczyk
2006/0200123 A1 9/2006 Ryan
2006/0201989 A1 9/2006 Ojeda
2006/0206100 A1 9/2006 Eskridge et al.
2006/0212069 A1 9/2006 Shelton, IV
2006/0217729 A1 9/2006 Eskridge et al.
2006/0226196 A1 10/2006 Hueil et al.
2006/0235368 A1 10/2006 Oz
2006/0235469 A1 10/2006 Viola
2006/0241655 A1 10/2006 Viola
2006/0241692 A1 10/2006 McGuckin, Jr. et al.
2006/0244460 A1 11/2006 Weaver
2006/0252990 A1 11/2006 Kubach
2006/0252993 A1 11/2006 Freed et al.
2006/0253069 A1 11/2006 Li et al.
2006/0258904 A1 11/2006 Stefanchik et al.
2006/0258910 A1 11/2006 Stefanchik et al.
2006/0259073 A1 11/2006 Miyamoto et al.
2006/0264831 A1 11/2006 Skwarek et al.
2006/0264927 A1 11/2006 Ryan
2006/0264929 A1 11/2006 Goble et al.
2006/0271042 A1 11/2006 Latterell et al.
2006/0271102 A1 11/2006 Bosshard et al.
2006/0278680 A1 12/2006 Viola et al.
2006/0278681 A1 12/2006 Viola et al.
2006/0282064 A1 12/2006 Shimizu et al.
2006/0284730 A1 12/2006 Schmid et al.
2006/0287576 A1 12/2006 Tsuji et al.
2006/0289602 A1 12/2006 Wales et al.
2006/0291981 A1 12/2006 Viola et al.
2007/0010702 A1 1/2007 Wang et al.
2007/0010838 A1 1/2007 Shelton, IV et al.
2007/0023476 A1 2/2007 Whitman et al.
2007/0023477 A1 2/2007 Whitman et al.
2007/0026039 A1 2/2007 Drumheller et al.
2007/0026040 A1 2/2007 Crawley et al.
2007/0027468 A1 2/2007 Wales et al.
2007/0027472 A1 2/2007 Hiles et al.
2007/0027551 A1 2/2007 Farnsworth et al.
2007/0027553 A1 2/2007 Biran et al.
2007/0034668 A1 2/2007 Holsten et al.
2007/0049951 A1 3/2007 Menn
2007/0049966 A1 3/2007 Bonadio et al.
2007/0051375 A1 3/2007 Milliman
2007/0055219 A1 3/2007 Whitman et al.
2007/0066981 A1 3/2007 Meagher
2007/0070574 A1 3/2007 Nerheim et al.
2007/0073341 A1 3/2007 Smith
2007/0078328 A1 4/2007 Ozaki et al.
2007/0078484 A1 4/2007 Talarico et al.
2007/0083193 A1 4/2007 Werneth et al.
2007/0084897 A1 4/2007 Shelton, IV et al.
2007/0090788 A1 4/2007 Hansford et al.
2007/0093869 A1 4/2007 Bloom et al.
2007/0102472 A1 5/2007 Shelton, IV
2007/0106113 A1 5/2007 Ravo
2007/0106317 A1 5/2007 Shelton, IV et al.
2007/0118175 A1 5/2007 Butler et al.
2007/0129605 A1 6/2007 Schaaf
2007/0135686 A1 6/2007 Pruitt, Jr. et al.
2007/0135803 A1 6/2007 Belson
2007/0155010 A1 7/2007 Farnsworth et al.
2007/0158358 A1 7/2007 Mason, II et al.
2007/0170225 A1 7/2007 Shelton, IV et al.
2007/0173687 A1 7/2007 Shima et al.
2007/0173806 A1 7/2007 Orszulak et al.
2007/0173813 A1 7/2007 Odom
2007/0175950 A1 8/2007 Shelton, IV et al.
2007/0175951 A1 8/2007 Shelton, IV et al.
2007/0175955 A1 8/2007 Shelton, IV et al.
2007/0179528 A1 8/2007 Soltz et al.
2007/0181632 A1 8/2007 Milliman
2007/0185545 A1 8/2007 Duke
2007/0190110 A1 8/2007 Pameijer et al.
2007/0191868 A1 8/2007 Theroux et al.
2007/0194079 A1 8/2007 Hueil et al.
2007/0194082 A1 8/2007 Morgan et al.
2007/0198039 A1 8/2007 Jones et al.
2007/0203510 A1 8/2007 Bettuchi
2007/0213750 A1 9/2007 Weadock
2007/0219571 A1 9/2007 Balbierz et al.
2007/0225562 A1 9/2007 Spivey et al.
2007/0233163 A1 10/2007 Bombard et al.
2007/0239028 A1 10/2007 Houser et al.
2007/0243227 A1 10/2007 Gertner
2007/0244471 A1 10/2007 Malackowski
2007/0246505 A1 10/2007 Pace-Floridia et al.
2007/0249999 A1 10/2007 Sklar et al.
2007/0250113 A1 10/2007 Hegeman et al.
2007/0260278 A1 11/2007 Wheeler et al.
2007/0270784 A1 11/2007 Smith et al.
2007/0270884 A1 11/2007 Smith et al.
2007/0275035 A1 11/2007 Herman et al.
2007/0276409 A1 11/2007 Ortiz et al.
2007/0279011 A1 12/2007 Jones et al.
2007/0286892 A1 12/2007 Herzberg et al.

(56) **References Cited**

U.S. PATENT DOCUMENTS

2007/0287993 A1 12/2007 Hinman et al.
2007/0288044 A1 12/2007 Jinno et al.
2007/0299427 A1 12/2007 Yeung et al.
2008/0003196 A1 1/2008 Jonn et al.
2008/0015598 A1 1/2008 Prommersberger
2008/0029570 A1 2/2008 Shelton et al.
2008/0029573 A1 2/2008 Shelton et al.
2008/0029574 A1 2/2008 Shelton et al.
2008/0029575 A1 2/2008 Shelton et al.
2008/0030170 A1 2/2008 Dacquay et al.
2008/0035701 A1 2/2008 Racenet et al.
2008/0041916 A1 2/2008 Milliman et al.
2008/0041917 A1 2/2008 Racenet et al.
2008/0051833 A1 2/2008 Gramuglia et al.
2008/0065153 A1 3/2008 Allard et al.
2008/0071328 A1 3/2008 Haubrich et al.
2008/0078802 A1 4/2008 Hess et al.
2008/0082114 A1 4/2008 McKenna et al.
2008/0082125 A1 4/2008 Murray et al.
2008/0082126 A1 4/2008 Murray et al.
2008/0083808 A1 4/2008 Scirica
2008/0083813 A1 4/2008 Zemlok et al.
2008/0085296 A1 4/2008 Powell et al.
2008/0086078 A1 4/2008 Powell et al.
2008/0091072 A1 4/2008 Omori et al.
2008/0097563 A1 4/2008 Petrie et al.
2008/0108443 A1 5/2008 Jinno et al.
2008/0114250 A1 5/2008 Urbano et al.
2008/0114315 A1 5/2008 Voegele et al.
2008/0114385 A1 5/2008 Byrum et al.
2008/0128469 A1 6/2008 Dalessandro et al.
2008/0129253 A1 6/2008 Shiue et al.
2008/0140115 A1 6/2008 Stopek
2008/0140159 A1 6/2008 Bornhoft et al.
2008/0154299 A1 6/2008 Linvneh
2008/0167522 A1* 7/2008 Giordano A61B 17/00 600/104
2008/0169328 A1 7/2008 Shelton
2008/0169332 A1 7/2008 Shelton et al.
2008/0169333 A1 7/2008 Shelton et al.
2008/0172087 A1 7/2008 Fuchs et al.
2008/0172088 A1 7/2008 Smith et al.
2008/0183193 A1 7/2008 Omori et al.
2008/0185419 A1 8/2008 Smith et al.
2008/0190989 A1 8/2008 Crews et al.
2008/0197167 A1 8/2008 Viola et al.
2008/0200762 A1 8/2008 Stokes et al.
2008/0200835 A1 8/2008 Monson et al.
2008/0200933 A1 8/2008 Bakos et al.
2008/0200949 A1 8/2008 Hiles et al.
2008/0228029 A1 9/2008 Mikkaichi et al.
2008/0241667 A1 10/2008 Kohn et al.
2008/0245841 A1 10/2008 Smith et al.
2008/0249536 A1 10/2008 Stahler et al.
2008/0249608 A1 10/2008 Dave
2008/0251568 A1 10/2008 Zemlok et al.
2008/0251569 A1 10/2008 Smith et al.
2008/0255413 A1 10/2008 Zemlok et al.
2008/0255607 A1 10/2008 Zemlok
2008/0262654 A1 10/2008 Omori et al.
2008/0281171 A1 11/2008 Fennell et al.
2008/0281254 A1 11/2008 Humayun et al.
2008/0283570 A1 11/2008 Boyden et al.
2008/0287944 A1 11/2008 Pearson et al.
2008/0287988 A1 11/2008 Smith et al.
2008/0290134 A1 11/2008 Bettuchi et al.
2008/0294179 A1 11/2008 Balbierz et al.
2008/0296346 A1 12/2008 Shelton, IV et al.
2008/0297287 A1 12/2008 Shachar et al.
2008/0308602 A1 12/2008 Timm et al.
2008/0308603 A1 12/2008 Shelton, IV et al.
2008/0308608 A1 12/2008 Prommersberger
2008/0314960 A1 12/2008 Marczyk et al.
2008/0315829 A1 12/2008 Jones et al.
2009/0001121 A1 1/2009 Hess et al.
2009/0001130 A1 1/2009 Hess et al.
2009/0004455 A1 1/2009 Gravagna et al.
2009/0005809 A1 1/2009 Hess et al.
2009/0012534 A1 1/2009 Madhani et al.
2009/0015195 A1 1/2009 Loth-Krausser
2009/0018553 A1 1/2009 McLean et al.
2009/0020958 A1 1/2009 Soul
2009/0047329 A1 2/2009 Stucky et al.
2009/0048589 A1 2/2009 Takashino et al.
2009/0048612 A1 2/2009 Farritor et al.
2009/0054908 A1 2/2009 Zand et al.
2009/0069842 A1 3/2009 Lee et al.
2009/0076506 A1 3/2009 Baker
2009/0078736 A1 3/2009 Van Lue
2009/0082789 A1 3/2009 Milliman et al.
2009/0088659 A1 4/2009 Graham et al.
2009/0088774 A1 4/2009 Swarup et al.
2009/0090763 A1 4/2009 Zemlok et al.
2009/0092651 A1 4/2009 Shah et al.
2009/0093728 A1 4/2009 Hyde et al.
2009/0099579 A1 4/2009 Nentwick et al.
2009/0099876 A1 4/2009 Whitman
2009/0108048 A1 4/2009 Zemlok et al.
2009/0112229 A1 4/2009 Omori et al.
2009/0114701 A1 5/2009 Zemlok et al.
2009/0119011 A1 5/2009 Kondo et al.
2009/0137952 A1 5/2009 Ramamurthy et al.
2009/0143805 A1 6/2009 Palmer et al.
2009/0143855 A1 6/2009 Weber et al.
2009/0149871 A9 6/2009 Kagan et al.
2009/0157067 A1 6/2009 Kane et al.
2009/0157087 A1 6/2009 Wei et al.
2009/0171147 A1 7/2009 Lee et al.
2009/0177226 A1 7/2009 Reinprecht et al.
2009/0179757 A1 7/2009 Cohn et al.
2009/0188964 A1 7/2009 Orlov
2009/0198272 A1 8/2009 Kerver et al.
2009/0204108 A1 8/2009 Steffen
2009/0204109 A1 8/2009 Grove et al.
2009/0206125 A1 8/2009 Huitema et al.
2009/0206126 A1 8/2009 Huitema et al.
2009/0206131 A1 8/2009 Weisenburgh, II et al.
2009/0206133 A1 8/2009 Morgan et al.
2009/0206137 A1 8/2009 Hall et al.
2009/0206139 A1 8/2009 Hall et al.
2009/0206141 A1 8/2009 Huitema et al.
2009/0206142 A1 8/2009 Huitema et al.
2009/0213685 A1 8/2009 Mak et al.
2009/0234273 A1 9/2009 Intoccia et al.
2009/0242610 A1 10/2009 Shelton, IV et al.
2009/0247368 A1 10/2009 Chiang
2009/0247901 A1 10/2009 Zimmer
2009/0248007 A1 10/2009 Falkenstein et al.
2009/0248038 A1 10/2009 Blumenkranz et al.
2009/0253959 A1 10/2009 Yoshie et al.
2009/0255974 A1 10/2009 Viola
2009/0255975 A1 10/2009 Zemlok et al.
2009/0255976 A1 10/2009 Marczyk et al.
2009/0255977 A1 10/2009 Zemlok
2009/0255978 A1 10/2009 Viola et al.
2009/0262078 A1 10/2009 Pizzi
2009/0270895 A1 10/2009 Churchill et al.
2009/0277949 A1 11/2009 Viola et al.
2009/0290016 A1 11/2009 Suda
2009/0292283 A1 11/2009 Odom
2009/0306639 A1 12/2009 Nevo et al.
2009/0308907 A1 12/2009 Nalagatla et al.
2010/0010511 A1 1/2010 Harris et al.
2010/0012704 A1 1/2010 Tarinelli Racenet et al.
2010/0016852 A1 1/2010 Manzo et al.
2010/0016888 A1 1/2010 Calabrese et al.
2010/0023024 A1 1/2010 Zeiner et al.
2010/0036370 A1 2/2010 Mirel et al.
2010/0041945 A1 2/2010 Isbell, Jr.
2010/0049084 A1 2/2010 Nock et al.
2010/0057087 A1 3/2010 Cha
2010/0057107 A1 3/2010 Sorrentino et al.
2010/0069942 A1 3/2010 Shelton, IV
2010/0072254 A1 3/2010 Aranyi et al.

(56) **References Cited**

U.S. PATENT DOCUMENTS

2010/0076483	A1	3/2010	Imuta
2010/0076489	A1	3/2010	Stopek et al.
2010/0081883	A1	4/2010	Murray et al.
2010/0087840	A1	4/2010	Ebersole et al.
2010/0094289	A1	4/2010	Taylor et al.
2010/0096431	A1	4/2010	Smith et al.
2010/0100124	A1	4/2010	Calabrese et al.
2010/0108740	A1	5/2010	Pastorelli et al.
2010/0108741	A1	5/2010	Hessler et al.
2010/0122339	A1	5/2010	Boccacci
2010/0133317	A1	6/2010	Shelton, IV et al.
2010/0145146	A1	6/2010	Melder
2010/0147921	A1	6/2010	Olson
2010/0147922	A1	6/2010	Olson
2010/0147923	A1	6/2010	D'Agostino et al.
2010/0163598	A1	7/2010	Belzer
2010/0179022	A1	7/2010	Shirokoshi
2010/0179540	A1	7/2010	Marczyk et al.
2010/0180711	A1	7/2010	Kilibarda et al.
2010/0186219	A1	7/2010	Smith
2010/0191292	A1	7/2010	DeMeo et al.
2010/0193566	A1	8/2010	Schieb et al.
2010/0200637	A1	8/2010	Beetel
2010/0204717	A1	8/2010	Knodel
2010/0222901	A1	9/2010	Swayze et al.
2010/0230465	A1	9/2010	Smith et al.
2010/0243707	A1	9/2010	Olson et al.
2010/0243708	A1	9/2010	Aranyi et al.
2010/0249497	A1	9/2010	Peine et al.
2010/0249519	A1	9/2010	Park et al.
2010/0249759	A1	9/2010	Hinman et al.
2010/0258611	A1	10/2010	Smith et al.
2010/0267662	A1	10/2010	Fielder et al.
2010/0268030	A1	10/2010	Viola et al.
2010/0274160	A1	10/2010	Yachi et al.
2010/0276471	A1	11/2010	Whitman
2010/0292540	A1	11/2010	Hess et al.
2010/0294827	A1	11/2010	Boyden et al.
2010/0298636	A1	11/2010	Casto et al.
2010/0312261	A1	12/2010	Suzuki et al.
2010/0320252	A1	12/2010	Viola et al.
2010/0331856	A1	12/2010	Carlson et al.
2010/0331880	A1	12/2010	Stopek
2011/0003528	A1	1/2011	Lam
2011/0006101	A1	1/2011	Hall et al.
2011/0009890	A1	1/2011	Palmer et al.
2011/0011916	A1	1/2011	Levine
2011/0016960	A1	1/2011	Debrailly
2011/0017799	A1	1/2011	Whitman et al.
2011/0021871	A1	1/2011	Berkelaar
2011/0022032	A1	1/2011	Zemlok et al.
2011/0024477	A1	2/2011	Hall et al.
2011/0024478	A1	2/2011	Shelton, IV
2011/0025311	A1	2/2011	Chauvin et al.
2011/0034910	A1	2/2011	Ross et al.
2011/0034918	A1	2/2011	Reschke
2011/0036887	A1	2/2011	Zemlok et al.
2011/0036890	A1	2/2011	Ma
2011/0036891	A1	2/2011	Zemlok et al.
2011/0045047	A1	2/2011	Bennett et al.
2011/0046666	A1	2/2011	Sorrentino et al.
2011/0046667	A1	2/2011	Culligan et al.
2011/0060356	A1	3/2011	Reschke et al.
2011/0060363	A1	3/2011	Hess et al.
2011/0082538	A1	4/2011	Dahlgren et al.
2011/0084112	A1	4/2011	Kostrzewski
2011/0087276	A1	4/2011	Bedi et al.
2011/0087279	A1	4/2011	Shah et al.
2011/0088921	A1	4/2011	Forgues et al.
2011/0095068	A1	4/2011	Patel
2011/0101065	A1	5/2011	Milliman
2011/0101069	A1	5/2011	Bombard et al.
2011/0112517	A1	5/2011	Peine et al.
2011/0114697	A1	5/2011	Baxter, III et al.
2011/0118778	A1	5/2011	Burbank
2011/0121049	A1	5/2011	Malinouskas et al.
2011/0125138	A1*	5/2011	Malinouskas A61B 17/068 606/1
2011/0125176	A1	5/2011	Yates et al.
2011/0144640	A1	6/2011	Heinrich et al.
2011/0147433	A1	6/2011	Shelton, IV et al.
2011/0155786	A1	6/2011	Shelton, IV
2011/0163146	A1	7/2011	Ortiz et al.
2011/0167619	A1	7/2011	Smith et al.
2011/0174099	A1	7/2011	Ross et al.
2011/0174861	A1	7/2011	Shelton, IV et al.
2011/0178536	A1	7/2011	Kostrzewski
2011/0184459	A1	7/2011	Malkowski et al.
2011/0192882	A1	8/2011	Hess et al.
2011/0199225	A1	8/2011	Touchberry et al.
2011/0208093	A1	8/2011	Gross et al.
2011/0210156	A1	9/2011	Smith et al.
2011/0218550	A1	9/2011	Ma
2011/0241597	A1	10/2011	Zhu et al.
2011/0253765	A1	10/2011	Nicholas et al.
2011/0257650	A1	10/2011	Deville et al.
2011/0264119	A1	10/2011	Bayon et al.
2011/0275901	A1	11/2011	Shelton, IV
2011/0276083	A1	11/2011	Shelton, IV et al.
2011/0278343	A1	11/2011	Knodel et al.
2011/0279268	A1	11/2011	Konishi et al.
2011/0282446	A1	11/2011	Schulte et al.
2011/0290856	A1	12/2011	Shelton, IV et al.
2011/0293690	A1	12/2011	Griffin et al.
2011/0295295	A1	12/2011	Shelton, IV et al.
2011/0307023	A1	12/2011	Tweden et al.
2011/0313894	A1	12/2011	Dye et al.
2011/0315413	A1	12/2011	Fisher et al.
2012/0004636	A1	1/2012	Lo
2012/0016239	A1	1/2012	Barthe et al.
2012/0016413	A1	1/2012	Timm et al.
2012/0018326	A1	1/2012	Racenet et al.
2012/0022523	A1	1/2012	Smith et al.
2012/0022630	A1	1/2012	Wübbeling
2012/0029272	A1	2/2012	Shelton, IV et al.
2012/0033360	A1	2/2012	Hsu
2012/0045303	A1	2/2012	Macdonald
2012/0046692	A1	2/2012	Smith et al.
2012/0064483	A1	3/2012	Lint et al.
2012/0074200	A1	3/2012	Schmid et al.
2012/0078071	A1	3/2012	Bohm et al.
2012/0078244	A1	3/2012	Worrell et al.
2012/0078278	A1	3/2012	Bales, Jr. et al.
2012/0080336	A1	4/2012	Shelton, IV et al.
2012/0080340	A1	4/2012	Shelton, IV et al.
2012/0080344	A1	4/2012	Shelton, IV
2012/0080475	A1	4/2012	Smith et al.
2012/0080478	A1	4/2012	Morgan et al.
2012/0080498	A1	4/2012	Shelton, IV et al.
2012/0089131	A1	4/2012	Zemlok et al.
2012/0110810	A1	5/2012	Houser et al.
2012/0116265	A1	5/2012	Houser et al.
2012/0116364	A1*	5/2012	Houser A61B 17/00234 606/1
2012/0116367	A1	5/2012	Houser et al.
2012/0116388	A1	5/2012	Houser et al.
2012/0116391	A1	5/2012	Houser et al.
2012/0116395	A1	5/2012	Madan et al.
2012/0123203	A1	5/2012	Riva
2012/0125792	A1	5/2012	Cassivi
2012/0138658	A1	6/2012	Ullrich et al.
2012/0171539	A1	7/2012	Rejman et al.
2012/0175398	A1	7/2012	Sandborn et al.
2012/0187179	A1	7/2012	Gleiman
2012/0209289	A1	8/2012	Duque et al.
2012/0223121	A1	9/2012	Viola et al.
2012/0228355	A1	9/2012	Combrowski et al.
2012/0234895	A1	9/2012	O'Connor et al.
2012/0234897	A1	9/2012	Shelton, IV et al.
2012/0234899	A1	9/2012	Scheib et al.
2012/0241492	A1	9/2012	Shelton, IV et al.
2012/0241493	A1	9/2012	Baxter, III et al.
2012/0248167	A1	10/2012	Flanagan et al.
2012/0248169	A1	10/2012	Widenhouse et al.

(56) **References Cited**

U.S. PATENT DOCUMENTS

2012/0251861 A1 10/2012 Liang et al.
2012/0253329 A1 10/2012 Zemlok et al.
2012/0265176 A1 10/2012 Braun
2012/0271285 A1 10/2012 Sholev et al.
2012/0273550 A1 11/2012 Scirica
2012/0277780 A1 11/2012 Smith et al.
2012/0283707 A1 11/2012 Giordano et al.
2012/0286021 A1 11/2012 Kostrzewski et al.
2012/0289979 A1 11/2012 Eskaros et al.
2012/0292367 A1 11/2012 Morgan et al.
2012/0296333 A1 11/2012 Twomey
2012/0298722 A1 11/2012 Hess et al.
2012/0310255 A1 12/2012 Brisson et al.
2012/0310256 A1 12/2012 Brisson
2012/0325892 A1 12/2012 Kostrzewski
2013/0012983 A1 1/2013 Kleyman
2013/0018361 A1 1/2013 Bryant
2013/0020375 A1 1/2013 Shelton, IV et al.
2013/0020376 A1 1/2013 Shelton, IV et al.
2013/0023861 A1 1/2013 Shelton, IV et al.
2013/0026208 A1 1/2013 Shelton, IV et al.
2013/0026210 A1 1/2013 Shelton, IV et al.
2013/0026973 A1 1/2013 Luke et al.
2013/0030608 A1 1/2013 Taylor et al.
2013/0032626 A1 2/2013 Smith et al.
2013/0037596 A1 2/2013 Bear et al.
2013/0046290 A1 2/2013 Palmer et al.
2013/0060278 A1 3/2013 Bozung et al.
2013/0062391 A1 3/2013 Boudreaux et al.
2013/0068816 A1 3/2013 Mandakolathur Vasudevan et al.
2013/0075446 A1 3/2013 Wang et al.
2013/0079814 A1 3/2013 Hess et al.
2013/0087597 A1 4/2013 Shelton, IV et al.
2013/0087599 A1 4/2013 Krumanaker et al.
2013/0087602 A1 4/2013 Olson et al.
2013/0090534 A1 4/2013 Burns et al.
2013/0098970 A1 4/2013 Racenet et al.
2013/0103023 A1 4/2013 Monson et al.
2013/0103024 A1 4/2013 Monson et al.
2013/0105548 A1 5/2013 Hodgkinson et al.
2013/0116668 A1 5/2013 Shelton, IV et al.
2013/0116669 A1 5/2013 Shelton, IV et al.
2013/0119108 A1 5/2013 Altman et al.
2013/0123822 A1 5/2013 Wellman et al.
2013/0126379 A1 5/2013 Medhal et al.
2013/0131476 A1 5/2013 Siu et al.
2013/0131651 A1 5/2013 Strobl et al.
2013/0146641 A1 6/2013 Shelton, IV et al.
2013/0146642 A1 6/2013 Shelton, IV et al.
2013/0150832 A1 6/2013 Belson et al.
2013/0153633 A1 6/2013 Casasanta, Jr. et al.
2013/0153634 A1 6/2013 Carter et al.
2013/0153635 A1 6/2013 Hodgkinson
2013/0153636 A1 6/2013 Shelton, IV et al.
2013/0153638 A1 6/2013 Carter et al.
2013/0153641 A1 6/2013 Shelton, IV et al.
2013/0168431 A1 7/2013 Zemlok et al.
2013/0172929 A1 7/2013 Hess et al.
2013/0175317 A1 7/2013 Yates et al.
2013/0175322 A1 7/2013 Yates et al.
2013/0181033 A1 7/2013 Shelton, IV et al.
2013/0186933 A1 7/2013 Shelton, IV et al.
2013/0186934 A1 7/2013 Shelton, IV et al.
2013/0190733 A1 7/2013 Giordano et al.
2013/0190757 A1 7/2013 Yates et al.
2013/0193188 A1 8/2013 Shelton, IV et al.
2013/0193189 A1 8/2013 Swensgard et al.
2013/0197556 A1 8/2013 Shelton, IV et al.
2013/0214025 A1 8/2013 Zemlok et al.
2013/0214030 A1 8/2013 Aronhalt et al.
2013/0221059 A1 8/2013 Racenet et al.
2013/0221063 A1 8/2013 Aronhalt et al.
2013/0221064 A1 8/2013 Aronhalt et al.
2013/0221065 A1 8/2013 Aronhalt et al.
2013/0233905 A1 9/2013 Sorrentino et al.
2013/0233906 A1 9/2013 Hess et al.
2013/0233908 A1 9/2013 Knodel et al.
2013/0238021 A1 9/2013 Gross et al.
2013/0256371 A1 10/2013 Shelton, IV et al.
2013/0256373 A1 10/2013 Schmid et al.
2013/0256374 A1 10/2013 Shelton, IV et al.
2013/0256375 A1 10/2013 Shelton, IV et al.
2013/0256377 A1 10/2013 Schmid et al.
2013/0256378 A1 10/2013 Schmid et al.
2013/0256379 A1 10/2013 Schmid et al.
2013/0256380 A1 10/2013 Schmid et al.
2013/0256382 A1 10/2013 Swayze et al.
2013/0256383 A1 10/2013 Aronhalt et al.
2013/0261648 A1 10/2013 Laurent et al.
2013/0267945 A1 10/2013 Behnke et al.
2013/0270322 A1 10/2013 Scheib et al.
2013/0277412 A1 10/2013 Gresham et al.
2013/0282052 A1 10/2013 Aranyi et al.
2013/0310873 A1 11/2013 Stopek et al.
2013/0313304 A1 11/2013 Shelton, IV et al.
2013/0313306 A1 11/2013 Shelton, IV et al.
2013/0319706 A1 12/2013 Nicholas et al.
2013/0324981 A1 12/2013 Smith et al.
2013/0324982 A1 12/2013 Smith et al.
2013/0327809 A1 12/2013 Shelton, IV et al.
2013/0327810 A1 12/2013 Swayze et al.
2013/0334283 A1 12/2013 Swayze et al.
2013/0334284 A1 12/2013 Swayze et al.
2013/0334285 A1 12/2013 Swayze et al.
2013/0334286 A1 12/2013 Swayze et al.
2013/0334287 A1 12/2013 Shelton, IV
2013/0334288 A1 12/2013 Shelton, IV
2013/0341374 A1 12/2013 Shelton, IV et al.
2014/0001231 A1 1/2014 Shelton, IV et al.
2014/0001234 A1 1/2014 Shelton, IV et al.
2014/0001237 A1 1/2014 Shelton, IV et al.
2014/0001238 A1 1/2014 Shelton, IV et al.
2014/0001239 A1 1/2014 Shelton, IV et al.
2014/0001240 A1 1/2014 Shelton, IV et al.
2014/0005640 A1 1/2014 Shelton, IV et al.
2014/0005678 A1 1/2014 Shelton, IV et al.
2014/0005681 A1 1/2014 Gee et al.
2014/0005693 A1 1/2014 Shelton, IV et al.
2014/0005694 A1 1/2014 Shelton, IV et al.
2014/0005702 A1 1/2014 Timm et al.
2014/0005703 A1 1/2014 Stulen et al.
2014/0005718 A1 1/2014 Shelton, IV et al.
2014/0008414 A1 1/2014 Shelton, IV et al.
2014/0012237 A1 1/2014 Pribanic et al.
2014/0012238 A1 1/2014 Chen et al.
2014/0012289 A1 1/2014 Snow et al.
2014/0014705 A1 1/2014 Baxter, III
2014/0015782 A1 1/2014 Kim et al.
2014/0018832 A1 1/2014 Shelton, IV
2014/0025046 A1 1/2014 Williams et al.
2014/0042205 A1 2/2014 Baxter, III et al.
2014/0048580 A1 2/2014 Merchant et al.
2014/0061279 A1 3/2014 Laurent et al.
2014/0061280 A1 3/2014 Ingmanson et al.
2014/0081176 A1 3/2014 Hassan
2014/0100558 A1 4/2014 Schmitz et al.
2014/0103093 A1 4/2014 Koch, Jr. et al.
2014/0107640 A1 4/2014 Yates et al.
2014/0110455 A1 4/2014 Ingmanson et al.
2014/0114327 A1 4/2014 Boudreaux et al.
2014/0128850 A1 5/2014 Kerr et al.
2014/0138423 A1 5/2014 Whitfield et al.
2014/0151431 A1 6/2014 Hodgkinson et al.
2014/0151433 A1 6/2014 Shelton, IV et al.
2014/0158747 A1 6/2014 Measamer et al.
2014/0166722 A1 6/2014 Hess et al.
2014/0166724 A1 6/2014 Schellin et al.
2014/0166725 A1 6/2014 Schellin et al.
2014/0166726 A1 6/2014 Schellin et al.
2014/0171966 A1 6/2014 Giordano et al.
2014/0175150 A1 6/2014 Shelton et al.
2014/0175152 A1 6/2014 Hess et al.
2014/0175154 A1 6/2014 Shelton, IV et al.
2014/0191014 A1 7/2014 Shelton, IV

(56) **References Cited**

U.S. PATENT DOCUMENTS

2014/0191015 A1 7/2014 Shelton, IV
2014/0203061 A1 7/2014 Hodgkinson
2014/0205637 A1 7/2014 Widenhouse et al.
2014/0207125 A1 7/2014 Applegate et al.
2014/0207166 A1 7/2014 Shelton, IV et al.
2014/0224857 A1 8/2014 Schmid
2014/0230595 A1 8/2014 Butt et al.
2014/0232316 A1 8/2014 Philipp
2014/0236184 A1 8/2014 Leimbach et al.
2014/0239036 A1 8/2014 Zerkle et al.
2014/0239038 A1 8/2014 Leimbach et al.
2014/0246472 A1 9/2014 Kimsey et al.
2014/0246475 A1 9/2014 Hall et al.
2014/0249557 A1 9/2014 Koch, Jr. et al.
2014/0252066 A1 9/2014 Shelton, IV et al.
2014/0252068 A1 9/2014 Shelton, IV et al.
2014/0259591 A1 9/2014 Shelton, IV et al.
2014/0263541 A1 9/2014 Leimbach et al.
2014/0263552 A1 9/2014 Hall et al.
2014/0263554 A1 9/2014 Leimbach et al.
2014/0263558 A1 9/2014 Hausen et al.
2014/0263562 A1 9/2014 Patel et al.
2014/0263564 A1 9/2014 Leimbach et al.
2014/0263572 A1 9/2014 Shelton, IV et al.
2014/0276730 A1 9/2014 Boudreaux et al.
2014/0277017 A1 9/2014 Leimbach et al.
2014/0284371 A1 9/2014 Morgan et al.
2014/0284373 A1 9/2014 Shelton, IV et al.
2014/0288460 A1 9/2014 Ouyang et al.
2014/0291378 A1 10/2014 Shelton, IV et al.
2014/0291379 A1 10/2014 Schellin et al.
2014/0291380 A1 10/2014 Weaner et al.
2014/0291382 A1 10/2014 Lloyd et al.
2014/0291383 A1 10/2014 Spivey et al.
2014/0296873 A1 10/2014 Morgan et al.
2014/0296874 A1 10/2014 Morgan et al.
2014/0299648 A1 10/2014 Shelton, IV et al.
2014/0303645 A1 10/2014 Morgan et al.
2014/0303646 A1 10/2014 Morgan et al.
2014/0305987 A1 10/2014 Parihar et al.
2014/0305988 A1 10/2014 Boudreaux et al.
2014/0305989 A1 10/2014 Parihar et al.
2014/0305990 A1 10/2014 Shelton, IV et al.
2014/0305991 A1 10/2014 Parihar et al.
2014/0305992 A1 10/2014 Kimsey et al.
2014/0305994 A1 10/2014 Parihar et al.
2014/0309665 A1 10/2014 Parihar et al.
2014/0309666 A1 10/2014 Shelton, IV et al.
2014/0330161 A1 11/2014 Swayze et al.
2014/0339286 A1 11/2014 Motooka et al.
2014/0352463 A1 12/2014 Parihar
2014/0353358 A1 12/2014 Shelton, IV et al.
2014/0367447 A1 12/2014 Woodard, Jr. et al.
2014/0378950 A1 12/2014 Chiu
2015/0008248 A1 1/2015 Giordano et al.
2015/0034696 A1 2/2015 Shelton, IV et al.
2015/0038986 A1 2/2015 Swensgard et al.
2015/0053737 A1 2/2015 Leimbach et al.
2015/0053738 A1 2/2015 Morgan et al.
2015/0053739 A1 2/2015 Morgan et al.
2015/0053740 A1 2/2015 Shelton, IV
2015/0053741 A1 2/2015 Shelton, IV et al.
2015/0053742 A1 2/2015 Shelton, IV et al.
2015/0053743 A1 2/2015 Yates et al.
2015/0053744 A1 2/2015 Swayze et al.
2015/0053745 A1 2/2015 Yates et al.
2015/0053746 A1 2/2015 Shelton, IV et al.
2015/0053748 A1 2/2015 Yates et al.
2015/0060518 A1 3/2015 Shelton, IV et al.
2015/0060519 A1 3/2015 Shelton, IV et al.
2015/0060520 A1 3/2015 Shelton, IV et al.
2015/0060521 A1 3/2015 Weisenburgh, II et al.
2015/0076207 A1 3/2015 Boudreaux et al.
2015/0076208 A1 3/2015 Shelton, IV
2015/0076209 A1 3/2015 Shelton, IV et al.
2015/0076210 A1 3/2015 Shelton, IV et al.
2015/0076212 A1 3/2015 Shelton, IV
2015/0080868 A1 3/2015 Kerr
2015/0083780 A1 3/2015 Shelton, IV et al.
2015/0083781 A1 3/2015 Giordano et al.
2015/0083782 A1 3/2015 Scheib et al.
2015/0083783 A1 3/2015 Shelton, IV et al.
2015/0090759 A1 4/2015 Spivey et al.
2015/0090760 A1 4/2015 Giordano et al.
2015/0090761 A1 4/2015 Giordano et al.
2015/0090762 A1 4/2015 Giordano et al.
2015/0090763 A1 4/2015 Murray et al.
2015/0108199 A1 4/2015 Shelton, IV et al.
2015/0122869 A1 5/2015 Aronhalt et al.
2015/0136830 A1 5/2015 Baxter, III et al.
2015/0136831 A1 5/2015 Baxter, III et al.
2015/0136832 A1 5/2015 Baxter, III et al.
2015/0136833 A1 5/2015 Shelton, IV et al.
2015/0136835 A1 5/2015 Shelton, IV et al.
2015/0157354 A1 6/2015 Bales, Jr. et al.
2015/0173744 A1 6/2015 Shelton, IV et al.
2015/0173745 A1 6/2015 Baxter, III et al.
2015/0173746 A1 6/2015 Baxter, III et al.
2015/0173747 A1 6/2015 Baxter, III et al.
2015/0173749 A1 6/2015 Shelton, IV et al.
2015/0173750 A1 6/2015 Shelton, IV et al.
2015/0173751 A1 6/2015 Shelton, IV et al.
2015/0173755 A1 6/2015 Baxter, III et al.
2015/0173756 A1 6/2015 Baxter, III et al.
2015/0173760 A1 6/2015 Shelton, IV et al.
2015/0173761 A1 6/2015 Shelton, IV et al.
2015/0173762 A1 6/2015 Shelton, IV et al.
2015/0173789 A1 6/2015 Baxter, III et al.
2015/0182220 A1 7/2015 Yates et al.
2015/0182222 A1 7/2015 Swayze et al.
2015/0196295 A1 7/2015 Shelton, IV et al.
2015/0196296 A1 7/2015 Swayze et al.
2015/0196299 A1 7/2015 Swayze et al.
2015/0196347 A1 7/2015 Yates et al.
2015/0196348 A1 7/2015 Yates et al.
2015/0201932 A1 7/2015 Swayze et al.
2015/0201935 A1 7/2015 Weisenburgh, II et al.
2015/0201936 A1 7/2015 Swayze et al.
2015/0201937 A1 7/2015 Swayze et al.
2015/0201938 A1 7/2015 Swayze et al.
2015/0201939 A1 7/2015 Swayze et al.
2015/0201940 A1 7/2015 Swayze et al.
2015/0201941 A1 7/2015 Swayze et al.
2015/0209031 A1 7/2015 Shelton, IV et al.
2015/0209038 A1 7/2015 Shelton, IV et al.
2015/0209039 A1 7/2015 Shelton, IV et al.
2015/0209041 A1 7/2015 Milliman et al.
2015/0223809 A1 8/2015 Scheib et al.
2015/0223816 A1 8/2015 Morgan et al.
2015/0230783 A1 8/2015 Shelton, IV et al.
2015/0230784 A1 8/2015 Shelton, IV et al.
2015/0231409 A1 8/2015 Racenet et al.
2015/0239180 A1 8/2015 Schellin et al.
2015/0265276 A1 9/2015 Huitema et al.
2015/0265357 A1 9/2015 Shelton, IV et al.
2015/0272557 A1 10/2015 Overmyer et al.
2015/0272569 A1 10/2015 Leimbach et al.
2015/0272570 A1 10/2015 Lytle, IV et al.
2015/0272571 A1 10/2015 Leimbach et al.
2015/0272572 A1 10/2015 Overmyer et al.
2015/0272574 A1 10/2015 Leimbach et al.
2015/0272575 A1 10/2015 Leimbach et al.
2015/0272578 A1 10/2015 Leimbach et al.
2015/0272579 A1 10/2015 Leimbach et al.
2015/0272580 A1 10/2015 Leimbach et al.
2015/0272581 A1 10/2015 Leimbach et al.
2015/0272582 A1 10/2015 Leimbach et al.
2015/0272583 A1 10/2015 Leimbach et al.
2015/0277471 A1 10/2015 Leimbach et al.
2015/0280384 A1 10/2015 Leimbach et al.
2015/0280424 A1 10/2015 Leimbach et al.
2015/0282809 A1 10/2015 Shelton, IV et al.
2015/0282810 A1 10/2015 Shelton, IV et al.
2015/0289873 A1 10/2015 Shelton, IV et al.

(56) **References Cited**

U.S. PATENT DOCUMENTS

2015/0289874 A1 10/2015 Leimbach et al.
2015/0297210 A1 10/2015 Widenhouse et al.
2015/0297217 A1 10/2015 Huitema et al.
2015/0297218 A1 10/2015 Shelton, IV et al.
2015/0297219 A1 10/2015 Shelton, IV et al.
2015/0297221 A1 10/2015 Kerr et al.
2015/0297222 A1 10/2015 Huitema et al.
2015/0297223 A1 10/2015 Huitema et al.
2015/0297224 A1 10/2015 Hall et al.
2015/0297225 A1 10/2015 Huitema et al.
2015/0297226 A1 10/2015 Hall et al.
2015/0297227 A1 10/2015 Huitema et al.
2015/0297228 A1 10/2015 Huitema et al.
2015/0297229 A1 10/2015 Schellin et al.
2015/0297230 A1 10/2015 Schellin et al.
2015/0297231 A1 10/2015 Huitema et al.
2015/0297232 A1 10/2015 Huitema et al.
2015/0297233 A1 10/2015 Huitema et al.
2015/0297234 A1 10/2015 Schellin et al.
2015/0297235 A1 10/2015 Harris et al.
2015/0297236 A1 10/2015 Harris et al.
2015/0305744 A1 10/2015 Moore et al.
2015/0305745 A1 10/2015 Baxter, III et al.
2015/0313591 A1 11/2015 Baxter, III et al.
2015/0313594 A1 11/2015 Shelton, IV et al.
2015/0327853 A1 11/2015 Aronhalt et al.
2015/0327864 A1 11/2015 Hodgkinson et al.
2015/0335328 A1 11/2015 Shelton, IV et al.
2015/0335329 A1 11/2015 Shelton, IV et al.
2015/0342606 A1 12/2015 Schmid et al.
2015/0342607 A1 12/2015 Shelton, IV et al.
2015/0359536 A1 12/2015 Cropper et al.
2015/0374367 A1 12/2015 Hall et al.
2015/0374368 A1 12/2015 Swayze et al.
2015/0374369 A1 12/2015 Yates et al.
2015/0374374 A1 12/2015 Shelton, IV et al.
2015/0374375 A1 12/2015 Shelton, IV et al.
2015/0374376 A1 12/2015 Shelton, IV
2015/0374377 A1 12/2015 Shelton, IV
2015/0374378 A1 12/2015 Giordano et al.
2015/0374379 A1 12/2015 Shelton, IV
2016/0000430 A1 1/2016 Ming et al.
2016/0000431 A1 1/2016 Giordano et al.
2016/0000432 A1 1/2016 Huang et al.
2016/0000437 A1 1/2016 Giordano et al.
2016/0000438 A1 1/2016 Swayze et al.
2016/0000439 A1 1/2016 Weisenburgh, II et al.
2016/0000440 A1 1/2016 Weisenburgh, II et al.
2016/0000441 A1 1/2016 Shelton, IV et al.
2016/0000442 A1 1/2016 Shelton, IV
2016/0000452 A1 1/2016 Yates et al.
2016/0000453 A1 1/2016 Yates et al.
2016/0000513 A1 1/2016 Shelton, IV et al.
2016/0007992 A1 1/2016 Yates et al.
2016/0008023 A1 1/2016 Yates et al.
2016/0015390 A1 1/2016 Timm et al.
2016/0015391 A1 1/2016 Shelton, IV et al.
2016/0051257 A1 2/2016 Shelton, IV et al.
2016/0058443 A1 3/2016 Yates et al.
2016/0066911 A1 3/2016 Baber et al.
2016/0066912 A1 3/2016 Baber et al.
2016/0066913 A1 3/2016 Swayze et al.
2016/0066915 A1 3/2016 Baber et al.
2016/0069449 A1 3/2016 Kanai et al.
2016/0074038 A1 3/2016 Leimbach et al.
2016/0074040 A1 3/2016 Widenhouse et al.
2016/0089137 A1 3/2016 Hess et al.
2016/0089141 A1 3/2016 Harris et al.
2016/0089142 A1 3/2016 Harris et al.
2016/0089143 A1 3/2016 Harris et al.
2016/0089146 A1 3/2016 Harris et al.
2016/0089147 A1 3/2016 Harris et al.
2016/0089148 A1 3/2016 Harris et al.
2016/0089149 A1 3/2016 Harris et al.
2016/0100837 A1 4/2016 Huang et al.
2016/0106426 A1 4/2016 Shelton, IV et al.
2016/0106427 A1 4/2016 Shelton, IV et al.
2016/0106431 A1 4/2016 Shelton, IV et al.
2016/0113653 A1 4/2016 Zingman
2016/0120544 A1 5/2016 Shelton, IV et al.
2016/0120545 A1 5/2016 Shelton, IV et al.
2016/0120547 A1 5/2016 Schmid et al.
2016/0128694 A1 5/2016 Baxter, III et al.
2016/0135812 A1 5/2016 Shelton, IV et al.
2016/0166256 A1 6/2016 Baxter, III et al.
2016/0174969 A1 6/2016 Kerr et al.
2016/0174970 A1 6/2016 Shelton, IV et al.
2016/0174971 A1 6/2016 Baxter, III et al.
2016/0174972 A1 6/2016 Shelton, IV et al.
2016/0174973 A1 6/2016 Shelton, IV et al.
2016/0174974 A1 6/2016 Schmid et al.
2016/0174975 A1 6/2016 Shelton, IV et al.
2016/0174976 A1 6/2016 Morgan et al.
2016/0174983 A1 6/2016 Shelton, IV et al.
2016/0174984 A1 6/2016 Smith et al.
2016/0174985 A1 6/2016 Baxter, III et al.
2016/0183939 A1 6/2016 Shelton, IV et al.
2016/0183943 A1 6/2016 Shelton, IV
2016/0183944 A1 6/2016 Swensgard et al.
2016/0183945 A1 6/2016 Shelton, IV et al.
2016/0183947 A1 6/2016 Shelton, IV et al.
2016/0183948 A1 6/2016 Shelton, IV et al.
2016/0183950 A1 6/2016 Shelton, IV et al.
2016/0184039 A1 6/2016 Shelton, IV et al.
2016/0192916 A1 7/2016 Shelton, IV et al.
2016/0192917 A1 7/2016 Shelton, IV et al.
2016/0192918 A1 7/2016 Shelton, IV et al.
2016/0192929 A1 7/2016 Schmid et al.
2016/0192933 A1 7/2016 Shelton, IV
2016/0192936 A1 7/2016 Leimbach et al.
2016/0192996 A1 7/2016 Spivey et al.
2016/0192997 A1 7/2016 Spivey et al.
2016/0199059 A1 7/2016 Shelton, IV et al.
2016/0199061 A1 7/2016 Shelton, IV et al.
2016/0199063 A1 7/2016 Vasudevan et al.
2016/0199064 A1 7/2016 Shelton, IV et al.
2016/0199088 A1 7/2016 Shelton, IV et al.
2016/0199089 A1 7/2016 Hess et al.
2016/0199956 A1 7/2016 Shelton, IV et al.
2016/0206309 A1 7/2016 Hess et al.
2016/0206310 A1 7/2016 Shelton, IV
2016/0206314 A1 7/2016 Scheib et al.
2016/0220246 A1 8/2016 Timm et al.
2016/0220247 A1 8/2016 Timm et al.
2016/0220248 A1 8/2016 Timm et al.
2016/0220249 A1 8/2016 Shelton, IV et al.
2016/0220254 A1 8/2016 Baxter, III et al.
2016/0220266 A1 8/2016 Shelton, IV et al.
2016/0220268 A1 8/2016 Shelton, IV et al.
2016/0235403 A1 8/2016 Shelton, IV et al.
2016/0235404 A1 8/2016 Shelton, IV
2016/0235405 A1 8/2016 Shelton, IV et al.
2016/0235406 A1 8/2016 Shelton, IV et al.
2016/0235408 A1 8/2016 Shelton, IV et al.
2016/0235409 A1 8/2016 Shelton, IV et al.
2016/0235494 A1 8/2016 Shelton, IV et al.
2016/0238108 A1 8/2016 Kanai et al.
2016/0242768 A1 8/2016 Moore et al.
2016/0242769 A1 8/2016 Moore et al.
2016/0242770 A1 8/2016 Moore et al.
2016/0242775 A1 8/2016 Shelton, IV et al.
2016/0242776 A1 8/2016 Shelton, IV et al.
2016/0242777 A1 8/2016 Shelton, IV et al.
2016/0242780 A1 8/2016 Shelton, IV et al.
2016/0242781 A1 8/2016 Shelton, IV et al.
2016/0242782 A1 8/2016 Shelton, IV et al.
2016/0242783 A1 8/2016 Shelton, IV et al.
2016/0249908 A1 9/2016 Shelton, IV et al.
2016/0249909 A1 9/2016 Shelton, IV et al.
2016/0249910 A1 9/2016 Shelton, IV et al.
2016/0249911 A1 9/2016 Timm et al.
2016/0249915 A1 9/2016 Beckman et al.
2016/0249916 A1 9/2016 Shelton, IV et al.
2016/0249917 A1 9/2016 Beckman et al.

(56) **References Cited**

U.S. PATENT DOCUMENTS

2016/0249918	A1	9/2016	Shelton, IV et al.
2016/0249919	A1	9/2016	Savage et al.
2016/0249922	A1	9/2016	Morgan et al.
2016/0249927	A1	9/2016	Beckman et al.
2016/0249930	A1	9/2016	Hall et al.
2016/0249945	A1	9/2016	Shelton, IV et al.
2016/0256071	A1	9/2016	Shelton, IV et al.
2016/0256153	A1	9/2016	Shelton, IV et al.
2016/0256154	A1	9/2016	Shelton, IV et al.
2016/0256155	A1	9/2016	Shelton, IV et al.
2016/0256156	A1	9/2016	Shelton, IV et al.
2016/0256160	A1	9/2016	Shelton, IV et al.
2016/0256161	A1	9/2016	Overmyer et al.
2016/0256162	A1	9/2016	Shelton, IV et al.
2016/0256163	A1	9/2016	Shelton, IV et al.
2016/0256184	A1	9/2016	Shelton, IV et al.
2016/0256185	A1	9/2016	Shelton, IV et al.
2016/0256186	A1	9/2016	Shelton, IV et al.
2016/0256229	A1	9/2016	Morgan et al.
2016/0262745	A1	9/2016	Morgan et al.
2016/0262746	A1	9/2016	Shelton, IV et al.
2016/0262760	A1	9/2016	Shelton, IV et al.
2016/0270780	A1	9/2016	Hall et al.
2016/0287249	A1	10/2016	Alexander, III et al.
2016/0287250	A1	10/2016	Shelton, IV et al.
2016/0287251	A1	10/2016	Shelton, IV et al.
2016/0287253	A1	10/2016	Shelton, IV et al.
2016/0287254	A1	10/2016	Baxter, III et al.
2016/0331375	A1	11/2016	Shelton, IV et al.
2017/0014129	A1	1/2017	Shelton, IV et al.

FOREIGN PATENT DOCUMENTS

AU	2012200178	B2	7/2013
CA	2458946	A1	3/2003
CA	2477181	A1	4/2004
CA	2512960	A1	1/2006
CA	2514274	A1	1/2006
CA	2639177	A1	2/2009
CA	2576347	C	8/2015
CN	86100996	A	9/1986
CN	1163558	A	10/1997
CN	2488482	Y	5/2002
CN	1424891	A	6/2003
CN	1523725	A	8/2004
CN	1545154	A	11/2004
CN	1634601	A	7/2005
CN	1636525	A	7/2005
CN	1636526	A	7/2005
CN	2716900	Y	8/2005
CN	2738962	Y	11/2005
CN	1726874	A	2/2006
CN	1726878	A	2/2006
CN	1868411	A	11/2006
CN	1915180	A	2/2007
CN	2868212	Y	2/2007
CN	1960679	A	5/2007
CN	101011286	A	8/2007
CN	101073509	A	11/2007
CN	200991269	Y	12/2007
CN	101095621	A	1/2008
CN	101111196	A	1/2008
CN	201001747	Y	1/2008
CN	101137402	A	3/2008
CN	101143105	A	3/2008
CN	201029899	Y	3/2008
CN	101224122	A	7/2008
CN	101224124	A	7/2008
CN	101254126	A	9/2008
CN	101507620	A	8/2009
CN	101507622	A	8/2009
CN	101507623	A	8/2009
CN	101507625	A	8/2009
CN	101507628	A	8/2009
CN	101534724	A	9/2009
CN	101541251	A	9/2009
CN	101626731	A	1/2010
CN	101675898	A	3/2010
CN	101683280	A	3/2010
CN	101801284	A	8/2010
CN	101868203	A	10/2010
CN	101873834	A	10/2010
CN	101912285	A	12/2010
CN	101028205	B	1/2011
CN	101933824	A	1/2011
CN	101934098	A	5/2011
CN	102038531	A	5/2011
CN	102038532	A	5/2011
CN	101534722	B	6/2011
CN	101361666	B	8/2011
CN	201949071	U	8/2011
CN	101224119	B	9/2011
CN	101336835	B	9/2011
CN	102188270	A	9/2011
CN	101779977	B	12/2011
CN	101534723	B	1/2012
CN	101310680	B	4/2012
CN	101912284	B	7/2012
CN	202397539	U	8/2012
CN	101317782	B	10/2012
CN	101507639	B	11/2012
CN	102835977	A	12/2012
CN	101507633	B	2/2013
CN	101023879	B	3/2013
CN	101507624	B	3/2013
CN	101327137	B	6/2013
CN	101401736	B	6/2013
CN	101332110	B	7/2013
CN	101683281	B	1/2014
CN	103648408	A	3/2014
CN	203597997	U	5/2014
CN	103908313	A	7/2014
CN	203736251	U	7/2014
CN	102783741	B	10/2014
CN	102973300	B	10/2014
CN	102793571	B	12/2014
CN	102166129	B	3/2015
CN	102113902	B	4/2015
CN	102247177	B	2/2016
CN	103750872	B	5/2016
DE	273689	C	5/1914
DE	1775926	A	1/1972
DE	3036217	A1	4/1982
DE	3212828	A1	11/1982
DE	3210466	A1	9/1983
DE	3709067	A1	9/1988
DE	4228909	A1	3/1994
DE	9412228	U1	9/1994
DE	19509116	A1	9/1996
DE	19534043	A1	3/1997
DE	19707373	C1	2/1998
DE	19851291	A1	1/2000
DE	19924311	A1	11/2000
DE	69328576	T2	1/2001
DE	20016423	U1	2/2001
DE	10052679	A1	5/2001
DE	20112837	U1	10/2001
DE	20121753	U1	4/2003
DE	10314827	B3	4/2004
DE	10314072	A1	10/2004
DE	202004012389	U1	11/2004
DE	202007003114	U1	6/2007
DE	102010013150	A1	9/2011
EP	0000756	A1	2/1979
EP	0122046	A1	10/1984
EP	0070230	B1	10/1985
EP	0156774	A2	10/1985
EP	0072754	B1	4/1986
EP	0033548	B1	5/1986
EP	0077262	B1	8/1986
EP	0189807	A2	8/1986
EP	0212278	A2	3/1987
EP	0129442	B1	11/1987
EP	0255631	A1	2/1988

(56) **References Cited**

FOREIGN PATENT DOCUMENTS

EP	0276104	A2	7/1988
EP	0379721	B1	8/1990
EP	0178940	B1	1/1991
EP	0178941	B1	1/1991
EP	0169044	B1	6/1991
EP	0248844	B1	1/1993
EP	0539762	A1	5/1993
EP	0545029	A1	6/1993
EP	0548998	A1	6/1993
EP	0277959	B1	10/1993
EP	0591946	A1	10/1993
EP	0233940	B1	11/1993
EP	0261230	B1	11/1993
EP	0639349	A2	2/1994
EP	0324636	B1	3/1994
EP	0593920	A1	4/1994
EP	0594148	A1	4/1994
EP	0427949	B1	6/1994
EP	0523174	B1	6/1994
EP	0600182	A2	6/1994
EP	0310431	B1	11/1994
EP	0375302	B1	11/1994
EP	0376562	B1	11/1994
EP	0623311	A2	11/1994
EP	0630612	A1	12/1994
EP	0630614	A1	12/1994
EP	0634144	A1	1/1995
EP	0646356	A2	4/1995
EP	0646357	A1	4/1995
EP	0505036	B1	5/1995
EP	0653189	A2	5/1995
EP	0669104	A1	8/1995
EP	0387980	B1	10/1995
EP	0511470	B1	10/1995
EP	0674876	A2	10/1995
EP	0679367	A2	11/1995
EP	0392547	B1	12/1995
EP	0685204	A1	12/1995
EP	0686374	A2	12/1995
EP	0364216	B1	1/1996
EP	0699418	A1	3/1996
EP	0702937	A1	3/1996
EP	0488768	B1	4/1996
EP	0705571	A1	4/1996
EP	0528478	B1	5/1996
EP	0711611	A2	5/1996
EP	0484677	B2	6/1996
EP	0541987	B1	7/1996
EP	0667119	B1	7/1996
EP	0737446	A1	10/1996
EP	0748614	A1	12/1996
EP	0708618	B1	3/1997
EP	0770355	A1	5/1997
EP	0503662	B1	6/1997
EP	0447121	B1	7/1997
EP	0621009	B1	7/1997
EP	0625077	B1	7/1997
EP	0633749	B1	8/1997
EP	0710090	B1	8/1997
EP	0578425	B1	9/1997
EP	0623312	B1	9/1997
EP	0621006	B1	10/1997
EP	0625335	B1	11/1997
EP	0552423	B1	1/1998
EP	0592244	B1	1/1998
EP	0648476	B1	1/1998
EP	0649290	B1	3/1998
EP	0598618	B1	9/1998
EP	0676173	B1	9/1998
EP	0678007	B1	9/1998
EP	0869104	A1	10/1998
EP	0603472	B1	11/1998
EP	0605351	B1	11/1998
EP	0878169	A1	11/1998
EP	0879742	A1	11/1998
EP	0695144	B1	12/1998
EP	0722296	B1	12/1998
EP	0760230	B1	2/1999
EP	0623316	B1	3/1999
EP	0650701	B1	3/1999
EP	0537572	B1	6/1999
EP	0923907	A1	6/1999
EP	0640317	B1	9/1999
EP	0843906	B1	3/2000
EP	0552050	B1	5/2000
EP	0833592	B1	5/2000
EP	0832605	B1	6/2000
EP	0830094	B1	9/2000
EP	1034747	A1	9/2000
EP	1034748	A1	9/2000
EP	0694290	B1	11/2000
EP	1050278	A1	11/2000
EP	1053719	A1	11/2000
EP	1053720	A1	11/2000
EP	1055399	A1	11/2000
EP	1055400	A1	11/2000
EP	1058177	A1	12/2000
EP	1080694	A1	3/2001
EP	1090592	A1	4/2001
EP	1095627	A1	5/2001
EP	0806914	B1	9/2001
EP	0768840	B1	12/2001
EP	0908152	B1	1/2002
EP	0717959	B1	2/2002
EP	0872213	B1	5/2002
EP	0862386	B1	6/2002
EP	0949886	B1	9/2002
EP	1238634	A2	9/2002
EP	0858295	B1	12/2002
EP	0656188	B1	1/2003
EP	0717960	B1	2/2003
EP	1284120	A1	2/2003
EP	1287788	A1	3/2003
EP	0717966	B1	4/2003
EP	0869742	B1	5/2003
EP	0829235	B1	6/2003
EP	0887046	B1	7/2003
EP	1323384	A2	7/2003
EP	0852480	B1	8/2003
EP	0891154	B1	9/2003
EP	0813843	B1	10/2003
EP	0873089	B1	10/2003
EP	0856326	B1	11/2003
EP	1374788	A1	1/2004
EP	0741996	B1	2/2004
EP	0814712	B1	2/2004
EP	1402837	A1	3/2004
EP	0705570	B1	4/2004
EP	0959784	B1	4/2004
EP	1407719	A2	4/2004
EP	1411626	A2	4/2004
EP	1086713	B1	5/2004
EP	0996378	B1	6/2004
EP	1426012	A1	6/2004
EP	0833593	B2	7/2004
EP	1442694	A1	8/2004
EP	0888749	B1	9/2004
EP	0959786	B1	9/2004
EP	1453432	A2	9/2004
EP	1459695	A1	9/2004
EP	1254636	B1	10/2004
EP	1473819	A1	11/2004
EP	1477119	A1	11/2004
EP	1479345	A1	11/2004
EP	1479347	A1	11/2004
EP	1479348	A1	11/2004
EP	0754437	B2	12/2004
EP	1025807	B1	12/2004
EP	1001710	B1	1/2005
EP	1496805	A2	1/2005
EP	1256318	B1	2/2005
EP	1520521	A1	4/2005
EP	1520522	A1	4/2005
EP	1520523	A1	4/2005

(56) **References Cited**

FOREIGN PATENT DOCUMENTS

EP	1520525	A1	4/2005
EP	1522264	A1	4/2005
EP	1523942	A2	4/2005
EP	1550408	A1	7/2005
EP	1557129	A1	7/2005
EP	1064883	B1	8/2005
EP	1067876	B1	8/2005
EP	0870473	B1	9/2005
EP	1157666	B1	9/2005
EP	0880338	B1	10/2005
EP	1158917	B1	11/2005
EP	1344498	B1	11/2005
EP	0906764	B1	12/2005
EP	1330989	B1	12/2005
EP	0771176	B2	1/2006
EP	1621138	A2	2/2006
EP	1621139	A2	2/2006
EP	1621141	A2	2/2006
EP	1621143	A2	2/2006
EP	1621145	A2	2/2006
EP	1621151	A2	2/2006
EP	1034746	B1	3/2006
EP	1201196	B1	3/2006
EP	1632191	A2	3/2006
EP	1647231	A1	4/2006
EP	1065981	B1	5/2006
EP	1082944	B1	5/2006
EP	1230899	B1	5/2006
EP	1652481	A2	5/2006
EP	1382303	B1	6/2006
EP	1253866	B1	7/2006
EP	1676539	A1	7/2006
EP	1032318	B1	8/2006
EP	1045672	B1	8/2006
EP	1617768	B1	8/2006
EP	1693015	A2	8/2006
EP	1400214	B1	9/2006
EP	1702567	A2	9/2006
EP	1129665	B1	11/2006
EP	1400206	B1	11/2006
EP	1721568	A1	11/2006
EP	1256317	B1	12/2006
EP	1285633	B1	12/2006
EP	1728473	A1	12/2006
EP	1728475	A2	12/2006
EP	1736105	A1	12/2006
EP	1011494	B1	1/2007
EP	1479346	B1	1/2007
EP	1484024	B1	1/2007
EP	1749485	A1	2/2007
EP	1754445	A2	2/2007
EP	1759812	A1	3/2007
EP	1767157	A1	3/2007
EP	1767163	A1	3/2007
EP	1563792	B1	4/2007
EP	1769756	A1	4/2007
EP	1769758	A1	4/2007
EP	1581128	B1	5/2007
EP	1780825	A1	5/2007
EP	1785097	A2	5/2007
EP	1790293	A2	5/2007
EP	1790294	A1	5/2007
EP	1563793	B1	6/2007
EP	1791473	A2	6/2007
EP	1800610	A1	6/2007
EP	1300117	B1	8/2007
EP	1813199	A1	8/2007
EP	1813200	A2	8/2007
EP	1813201	A1	8/2007
EP	1813202	A1	8/2007
EP	1813203	A2	8/2007
EP	1813207	A1	8/2007
EP	1813209	A1	8/2007
EP	1815950	A1	8/2007
EP	1330991	B1	9/2007
EP	1806103	B1	9/2007
EP	1837041	A1	9/2007
EP	0922435	B1	10/2007
EP	1487359	B1	10/2007
EP	1599146	B1	10/2007
EP	1839596	A1	10/2007
EP	2110083	A2	10/2007
EP	1679096	B1	11/2007
EP	1857057	A2	11/2007
EP	1402821	B1	12/2007
EP	1872727	A1	1/2008
EP	1550410	B1	2/2008
EP	1671593	B1	2/2008
EP	1897502	A1	3/2008
EP	1611856	B1	4/2008
EP	1908417	A2	4/2008
EP	1917929	A1	5/2008
EP	1330201	B1	6/2008
EP	1702568	B1	7/2008
EP	1943955	A2	7/2008
EP	1943957	A2	7/2008
EP	1943959	A1	7/2008
EP	1943962	A2	7/2008
EP	1943964	A1	7/2008
EP	1943976	A2	7/2008
EP	1593337	B1	8/2008
EP	1970014	A1	9/2008
EP	1974678	A2	10/2008
EP	1980213	A2	10/2008
EP	1980214	A2	10/2008
EP	1759645	B1	11/2008
EP	1987780	A2	11/2008
EP	1990014	A2	11/2008
EP	1992296	A1	11/2008
EP	1552795	B1	12/2008
EP	1693008	B1	12/2008
EP	1759640	B1	12/2008
EP	1997439	A2	12/2008
EP	2000101	A2	12/2008
EP	2000102	A2	12/2008
EP	2005894	A2	12/2008
EP	2005897	A2	12/2008
EP	2005901	A1	12/2008
EP	2008595	A2	12/2008
EP	2025293	A1	2/2009
EP	1736104	B1	3/2009
EP	1749486	B1	3/2009
EP	1782743	B1	3/2009
EP	2039302	A2	3/2009
EP	2039308	A2	3/2009
EP	2039316	A2	3/2009
EP	1721576	B1	4/2009
EP	1733686	B1	4/2009
EP	2044890	A1	4/2009
EP	2055243	A2	5/2009
EP	1550409	B1	6/2009
EP	1550413	B1	6/2009
EP	1719461	B1	6/2009
EP	1834594	B1	6/2009
EP	1709911	B1	7/2009
EP	2077093	A2	7/2009
EP	1745748	B1	8/2009
EP	2090231	A1	8/2009
EP	2090237	A1	8/2009
EP	2090241	A1	8/2009
EP	2090244	B1	8/2009
EP	2090245	A1	8/2009
EP	2090254	A1	8/2009
EP	2090256	A2	8/2009
EP	2095777	A2	9/2009
EP	2098170	A2	9/2009
EP	2100562	A2	9/2009
EP	2110082	A1	10/2009
EP	2110084	A2	10/2009
EP	2111803	A2	10/2009
EP	1762190	B8	11/2009
EP	1813208	B1	11/2009
EP	1908426	B1	11/2009
EP	2116195	A1	11/2009

(56) **References Cited**

FOREIGN PATENT DOCUMENTS

EP	2116197	A2	11/2009
EP	1607050	B1	12/2009
EP	1815804	B1	12/2009
EP	1875870	B1	12/2009
EP	1878395	B1	1/2010
EP	2151204	A1	2/2010
EP	1813211	B1	3/2010
EP	2165654	A1	3/2010
EP	2165656	A2	3/2010
EP	2165660	A2	3/2010
EP	2165663	A2	3/2010
EP	2165664	A2	3/2010
EP	1566150	B1	4/2010
EP	1813206	B1	4/2010
EP	2184014	A2	5/2010
EP	1769754	B1	6/2010
EP	1854416	B1	6/2010
EP	1911408	B1	6/2010
EP	2198787	A1	6/2010
EP	2214610	A1	8/2010
EP	2218409	A1	8/2010
EP	1647286	B1	9/2010
EP	1825821	B1	9/2010
EP	1535565	B1	10/2010
EP	1702570	B1	10/2010
EP	1785098	B1	10/2010
EP	2005896	B1	10/2010
EP	2030578	B1	11/2010
EP	2036505	B1	11/2010
EP	2245993	A2	11/2010
EP	2245994	A1	11/2010
EP	2253280	A1	11/2010
EP	1627605	B1	12/2010
EP	2027811	B1	12/2010
EP	2130498	B1	12/2010
EP	2258282	A2	12/2010
EP	2263568	A2	12/2010
EP	1994890	B1	1/2011
EP	2005900	B1	1/2011
EP	2277667	A1	1/2011
EP	2283780	A2	2/2011
EP	2286738	A2	2/2011
EP	1494595	B1	3/2011
EP	1690502	B1	3/2011
EP	1884201	B1	3/2011
EP	2292153	A1	3/2011
EP	1769755	B1	4/2011
EP	2090240	B1	4/2011
EP	2305135	A1	4/2011
EP	2308388	A1	4/2011
EP	2314254	A2	4/2011
EP	2316345	A1	5/2011
EP	2316366	A2	5/2011
EP	2319443	A1	5/2011
EP	2324776	A2	5/2011
EP	1813205	B1	6/2011
EP	2042107	B1	6/2011
EP	2090243	B1	6/2011
EP	2329773	A1	6/2011
EP	2090239	B1	7/2011
EP	2340771	A2	7/2011
EP	2353545	A1	8/2011
EP	2361562	A1	8/2011
EP	2377472	A1	10/2011
EP	1836986	B1	11/2011
EP	1908414	B1	11/2011
EP	2153781	B1	11/2011
EP	2387943	A2	11/2011
EP	2389928	A2	11/2011
EP	1847225	B1	12/2011
EP	2397079	A1	12/2011
EP	2399538	A2	12/2011
EP	1785102	B1	1/2012
EP	1316290	B1	2/2012
EP	2415416	A1	2/2012
EP	2090253	B1	3/2012
EP	2430986	A2	3/2012
EP	1347638	B1	5/2012
EP	1943956	B1	5/2012
EP	2446834	A1	5/2012
EP	2455007	A2	5/2012
EP	2457519	A1	5/2012
EP	2462878	A1	6/2012
EP	2462880	A2	6/2012
EP	1813204	B1	7/2012
EP	2189121	B1	7/2012
EP	2248475	B1	7/2012
EP	2478845	A2	7/2012
EP	2005895	B1	8/2012
EP	2090248	B1	8/2012
EP	2481359	A1	8/2012
EP	2486860	A2	8/2012
EP	2486862	A2	8/2012
EP	2486868	A2	8/2012
EP	1908412	B1	9/2012
EP	1935351	B1	9/2012
EP	2497431	A1	9/2012
EP	1550412	B2	10/2012
EP	1616549	B1	10/2012
EP	2030579	B1	10/2012
EP	2090252	B1	10/2012
EP	2517637	A1	10/2012
EP	2517638	A1	10/2012
EP	2517642	A2	10/2012
EP	2517645	A2	10/2012
EP	2517649	A2	10/2012
EP	2517651	A2	10/2012
EP	2526877	A1	11/2012
EP	2526883	A1	11/2012
EP	1884206	B1	3/2013
EP	2286735	B1	3/2013
EP	2090238	B1	4/2013
EP	2586380	A1	5/2013
EP	2586383	A2	5/2013
EP	2606812	A1	6/2013
EP	2606834	A2	6/2013
EP	1982657	B1	7/2013
EP	2614782	A2	7/2013
EP	2617369	A1	7/2013
EP	2090234	B1	9/2013
EP	2633830	A1	9/2013
EP	2644124	A1	10/2013
EP	2644209	A2	10/2013
EP	2649948	A1	10/2013
EP	2649949	A1	10/2013
EP	1997438	B1	11/2013
EP	2684529	A2	1/2014
EP	2700367	A1	2/2014
EP	2713902	A1	4/2014
EP	1772105	B1	5/2014
EP	2759267	A2	7/2014
EP	2764826	A1	8/2014
EP	2764827	A2	8/2014
EP	2767243	A3	8/2014
EP	2772206	A2	9/2014
EP	2772209	A1	9/2014
EP	2777520	A1	9/2014
EP	2777528	A2	9/2014
EP	2777537	A1	9/2014
EP	2777538	A2	9/2014
EP	2786714	A2	10/2014
EP	2792313	A2	10/2014
EP	2803324	A2	11/2014
EP	2446835	B1	1/2015
EP	2845545	A1	3/2015
EP	1943960	B1	4/2015
EP	2090255	B1	4/2015
EP	2923647	A2	9/2015
EP	2923653	A2	9/2015
EP	2923660	A2	9/2015
EP	2944270	A1	11/2015
EP	1774914	B1	12/2015
EP	2090235	B1	4/2016
EP	2823773	B1	4/2016

(56) **References Cited**

FOREIGN PATENT DOCUMENTS

EP	2131750	B1	5/2016
EP	2510891	B1	6/2016
EP	1915957	B1	8/2016
EP	2296559	B1	8/2016
EP	2586379	B1	8/2016
EP	2777533	B1	10/2016
EP	2364651	B1	11/2016
EP	2116192	B1	3/2017
EP	2687164	B1	5/2017
EP	2311386	B1	6/2017
EP	2839787	B1	6/2017
EP	2745782	A1	10/2017
ES	2396594	T3	2/2013
FR	459743	A	11/1913
FR	999646	A	2/1952
FR	1112936	A	3/1956
FR	2452275	B1	4/1983
FR	2598905	A1	11/1987
FR	2689749	B1	7/1994
FR	2765794	A1	1/1999
FR	2815842	A1	10/2000
GB	939929	A	10/1963
GB	1210522	A	10/1970
GB	1217159	A	12/1970
GB	1339394	A	12/1973
GB	2024012	A	1/1980
GB	2109241	A	6/1983
GB	2272159	A	5/1994
GB	2284242	A	5/1995
GB	2286435	A	8/1995
GB	2336214	A	10/1999
GB	2425903	A	11/2006
GB	2423199	B	5/2009
GB	2509523	A	7/2014
GR	930100110	A	11/1993
JP	S47-11908	Y1	5/1972
JP	S50-33988	U	4/1975
JP	S56-112235	A	9/1981
JP	S58500053	A	1/1983
JP	S58-501360	A	8/1983
JP	S59-174920	A	3/1984
JP	S60-100955	A	6/1985
JP	S60-212152	A	10/1985
JP	S61-98249	A	5/1986
JP	S61502036	A	9/1986
JP	S62-170011	U	10/1987
JP	S63-59764	A	3/1988
JP	S63-147449	A	6/1988
JP	S63-203149	A	8/1988
JP	H02-279149	A	11/1990
JP	H03-12126	A	1/1991
JP	H03-18354	A	1/1991
JP	H03-78514	U	8/1991
JP	H03-85009	U	8/1991
JP	H04-215747	A	8/1992
JP	H04-131860	U	12/1992
JP	H05-84252	A	4/1993
JP	H05-123325	A	5/1993
JP	H06-30945	A	2/1994
JP	H06-54857	A	3/1994
JP	H06-63054	A	3/1994
JP	H06-26812	U	4/1994
JP	H06-121798	A	5/1994
JP	H06-125913	A	5/1994
JP	H06-197901	A	7/1994
JP	H06-237937	A	8/1994
JP	H06-327684	A	11/1994
JP	H07-9622	U	2/1995
JP	H07-31623	A	2/1995
JP	H07-47070	A	2/1995
JP	H07-51273	A	2/1995
JP	H07-124166	A	5/1995
JP	H07-163573	A	6/1995
JP	H07-163574	A	6/1995
JP	H07-171163	A	7/1995
JP	H07-255735	A	10/1995
JP	H07-285089	A	10/1995
JP	H07-299074	A	11/1995
JP	H08-33641	A	2/1996
JP	H08-33642	A	2/1996
JP	H08-164141	A	6/1996
JP	H08-173437	A	7/1996
JP	H08-182684	A	7/1996
JP	H08-215201	A	8/1996
JP	H08-507708	A	8/1996
JP	H08-229050	A	9/1996
JP	H08-289895	A	11/1996
JP	H08-336540	A	12/1996
JP	H08-336544	A	12/1996
JP	H09-501081	A	2/1997
JP	H09-501577	A	2/1997
JP	H09-164144	A	6/1997
JP	H10-113352	A	5/1998
JP	H10-118090	A	5/1998
JP	H10-296660	A	11/1998
JP	H10-512465	A	12/1998
JP	H10-512469	A	12/1998
JP	2000-014632	A	1/2000
JP	2000-033071	A	2/2000
JP	2000-112002	A	4/2000
JP	2000-166932	A	6/2000
JP	2000-171730	A	6/2000
JP	3056672	B2	6/2000
JP	2000-287987	A	10/2000
JP	2000-325303	A	11/2000
JP	2001-037763	A	2/2001
JP	2001-046384	A	2/2001
JP	2001-087272	A	4/2001
JP	2001-514541	A	9/2001
JP	2001-276091	A	10/2001
JP	2001-286477	A	10/2001
JP	2001-517473	A	10/2001
JP	2002-051974	A	2/2002
JP	2002-085415	A	3/2002
JP	2002-143078	A	5/2002
JP	2002-204801	A	7/2002
JP	2002-528161	A	9/2002
JP	2002-314298	A	10/2002
JP	2002-369820	A	12/2002
JP	2002-542186	A	12/2002
JP	2003-000603	A	1/2003
JP	2003-500153	A	1/2003
JP	2003-504104	A	2/2003
JP	2003-135473	A	5/2003
JP	2003-148903	A	5/2003
JP	2003-164066	A	6/2003
JP	2003-521301	A	7/2003
JP	2003-521304	A	7/2003
JP	2003-523251	A	8/2003
JP	2003-523254	A	8/2003
JP	2003-524431	A	8/2003
JP	3442423	B2	9/2003
JP	2003-300416	A	10/2003
JP	2004-147701	A	5/2004
JP	2004-162035	A	6/2004
JP	2004-229976	A	8/2004
JP	2004-524076	A	8/2004
JP	2004-531280	A	10/2004
JP	2004-532084	A	10/2004
JP	2004-532676	A	10/2004
JP	2004-329624	A	11/2004
JP	2004-535217	A	11/2004
JP	2004-337617	A	12/2004
JP	2004-344662	A	12/2004
JP	2004-344663	A	12/2004
JP	2005-013573	A	1/2005
JP	2005-028147	A	2/2005
JP	2005-028148	A	2/2005
JP	2005-028149	A	2/2005
JP	2005-505309	A	2/2005
JP	2005-505322	A	2/2005
JP	2005-505334	A	2/2005
JP	2005-080702	A	3/2005
JP	2005-103280	A	4/2005

(56) **References Cited**

FOREIGN PATENT DOCUMENTS

JP	2005-103281	A	4/2005
JP	2005-103293	A	4/2005
JP	2005-511131	A	4/2005
JP	2005-511137	A	4/2005
JP	2005-131163	A	5/2005
JP	2005-131164	A	5/2005
JP	2005-131173	A	5/2005
JP	2005-131211	A	5/2005
JP	2005-131212	A	5/2005
JP	2005-137423	A	6/2005
JP	2005-137919	A	6/2005
JP	2005-144183	A	6/2005
JP	2005-152416	A	6/2005
JP	2005-516714	A	6/2005
JP	2005-187954	A	7/2005
JP	2005-521109	A	7/2005
JP	2005-523105	A	8/2005
JP	2005-524474	A	8/2005
JP	4461008	B2	8/2005
JP	2005-296412	A	10/2005
JP	2005-529675	A	10/2005
JP	2005-529677	A	11/2005
JP	2005-328882	A	12/2005
JP	2005-335432	A	12/2005
JP	2005-342267	A	12/2005
JP	2006-034975	A	2/2006
JP	2006-034977	A	2/2006
JP	2006-034978	A	2/2006
JP	2006-034980	A	2/2006
JP	2006-043451	A	2/2006
JP	2006-506106	A	2/2006
JP	2006-510879	A	3/2006
JP	3791856	B2	6/2006
JP	2006-187649	A	7/2006
JP	2006-218228	A	8/2006
JP	2006-218297	A	8/2006
JP	2006-223872	A	8/2006
JP	2006-281405	A	10/2006
JP	2006-289064	A	10/2006
JP	2006-334412	A	12/2006
JP	2006-334417	A	12/2006
JP	2006-346445	A	12/2006
JP	2007-000634	A	1/2007
JP	2007-050253	A	3/2007
JP	2007-061628	A	3/2007
JP	2007-083051	A	4/2007
JP	2007-098130	A	4/2007
JP	2007-105481	A	4/2007
JP	3906843	B2	4/2007
JP	2007-117725	A	5/2007
JP	2007-130471	A	5/2007
JP	2007-130479	A	5/2007
JP	2007-222615	A	6/2007
JP	3934161	B2	6/2007
JP	2007-203047	A	8/2007
JP	2007-203049	A	8/2007
JP	2007-203051	A	8/2007
JP	2007-203055	A	8/2007
JP	2007-203057	A	8/2007
JP	2007-524435	A	8/2007
JP	2007-229448	A	9/2007
JP	2007-526026	A	9/2007
JP	2007-252916	A	10/2007
JP	4001860	B2	10/2007
JP	2007-307373	A	11/2007
JP	2007-325922	A	12/2007
JP	2008-068073	A	3/2008
JP	2008-510515	A	4/2008
JP	2008-516669	A	5/2008
JP	2008-528203	A	7/2008
JP	2008-206967	A	9/2008
JP	2008-212637	A	9/2008
JP	2008-212638	A	9/2008
JP	2008-212640	A	9/2008
JP	2008-220956	A	9/2008
JP	2008-237881	A	10/2008
JP	2008-259860	A	10/2008
JP	2008-264535	A	11/2008
JP	2008-283459	A	11/2008
JP	2008-307393	A	12/2008
JP	2009-000531	A	1/2009
JP	2009-006137	A	1/2009
JP	2009-502351	A	1/2009
JP	2009-502352	A	1/2009
JP	2009-022742	A	2/2009
JP	2009-506799	A	2/2009
JP	2009-507526	A	2/2009
JP	2009-072595	A	4/2009
JP	2009-072599	A	4/2009
JP	2009-090113	A	4/2009
JP	2009-106752	A	5/2009
JP	2009-189821	A	8/2009
JP	2009-189823	A	8/2009
JP	2009-189836	A	8/2009
JP	2009-189837	A	8/2009
JP	2009-189838	A	8/2009
JP	2009-189846	A	8/2009
JP	2009-189847	A	8/2009
JP	2009-201998	A	9/2009
JP	2009-536082	A	10/2009
JP	2009-261944	A	11/2009
JP	2009-268908	A	11/2009
JP	2009-538684	A	11/2009
JP	2009-539420	A	11/2009
JP	2009-291604	A	12/2009
JP	2010-504808	A	2/2010
JP	2010-504809	A	2/2010
JP	2010-504813	A	2/2010
JP	2010-504846	A	2/2010
JP	2010-505524	A	2/2010
JP	2010-069307	A	4/2010
JP	2010-069310	A	4/2010
JP	2010-075694	A	4/2010
JP	2010-075695	A	4/2010
JP	2010-088876	A	4/2010
JP	2010-094514	A	4/2010
JP	2010-098844	A	4/2010
JP	2010-520025	A	6/2010
JP	2010-142636	A	7/2010
JP	2010-148879	A	7/2010
JP	2010-214166	A	9/2010
JP	4549018	B2	9/2010
JP	2010-240411	A	10/2010
JP	2010-240429		10/2010
JP	2010-246948	A	11/2010
JP	2010-279690	A	12/2010
JP	2010-540041	A	12/2010
JP	2010-540192	A	12/2010
JP	2011-005260	A	1/2011
JP	2011-504391	A	2/2011
JP	2011-509786	A	3/2011
JP	2011-072797	A	4/2011
JP	2011-078763	A	4/2011
JP	2011-115594	A	6/2011
JP	2011-520564	A	7/2011
JP	2011-524199	A	9/2011
JP	4783373	B2	9/2011
JP	2011-251156	A	12/2011
JP	2012-040398	A	3/2012
JP	2012-507356	A	3/2012
JP	2012-517289	A	8/2012
JP	5140421	B2	2/2013
JP	5162595	B2	3/2013
JP	2013-517891	A	5/2013
JP	2013-526342	A	6/2013
JP	2013-128791	A	7/2013
JP	5212039	B2	7/2013
JP	5333899	B2	11/2013
JP	6007357	B2	10/2016
KR	20110003229	A	1/2011
RU	2008830	C1	3/1994
RU	2052979	C1	1/1996
RU	2066128	C1	9/1996
RU	2098025	C1	12/1997

(56) **References Cited**

FOREIGN PATENT DOCUMENTS

RU	2141279	C1	11/1999
RU	2144791	C1	1/2000
RU	2181566	C2	4/2002
RU	2187249	C2	8/2002
RU	2189091	C2	9/2002
RU	32984	U1	10/2003
RU	2225170	C2	3/2004
RU	42750	U1	12/2004
RU	61114	U1	2/2007
RU	2007-103563	A	8/2008
SU	189517	A	1/1967
SU	328636	A	9/1972
SU	511939	A1	4/1976
SU	674747	A1	7/1979
SU	886900	A1	12/1981
SU	1009439	A	4/1983
SU	1022703	A1	6/1983
SU	1271497	A1	11/1986
SU	1333319	A2	8/1987
SU	1377053	A1	2/1988
SU	1443874	A1	12/1988
SU	1509051	A1	9/1989
SU	1561964	A1	5/1990
SU	1708312	A1	1/1992
SU	1722476	A1	3/1992
SU	1752361	A1	8/1992
SU	1814161	A1	5/1993
WO	WO 82/02824	A1	9/1982
WO	WO 86/02254	A1	4/1986
WO	WO 91/15157	A1	10/1991
WO	WO 92/20295	A1	11/1992
WO	WO 92/21300	A1	12/1992
WO	WO 93/08755	A1	5/1993
WO	WO 93/13718	A1	7/1993
WO	WO 93/14690	A1	8/1993
WO	WO 93/15648	A1	8/1993
WO	WO 93/15850	A1	8/1993
WO	WO 93/19681	A1	10/1993
WO	WO 94/00060	A1	1/1994
WO	WO 94/11057	A1	5/1994
WO	WO 94/12108	A1	6/1994
WO	WO 94/17737	A1	8/1994
WO	WO 94/18893	A1	9/1994
WO	WO 94/20030	A1	9/1994
WO	WO 94/22378	A1	10/1994
WO	WO 94/23659	A1	10/1994
WO	WO 94/24943	A1	11/1994
WO	WO 94/24947	A1	11/1994
WO	WO 95/02369	A1	1/1995
WO	WO 95/03743	A1	2/1995
WO	WO 95/06817	A1	3/1995
WO	WO 95/09576	A1	4/1995
WO	WO 95/09577	A1	4/1995
WO	WO 95/14436	A1	6/1995
WO	WO 95/17855	A1	7/1995
WO	WO 95/18383	A1	7/1995
WO	WO 95/18572	A1	7/1995
WO	WO 95/19739	A1	7/1995
WO	WO 95/20360	A1	8/1995
WO	WO 95/23557	A1	9/1995
WO	WO 95/24865	A1	9/1995
WO	WO 95/25471	A3	9/1995
WO	WO 95/26562	A1	10/1995
WO	WO 95/29639	A1	11/1995
WO	WO 96/04858	A1	2/1996
WO	WO 96/18344	A2	6/1996
WO	WO 96/19151	A1	6/1996
WO	WO 96/19152	A1	6/1996
WO	WO 96/20652	A1	7/1996
WO	WO 96/21119	A1	7/1996
WO	WO 96/22055	A1	7/1996
WO	WO 96/23448	A1	8/1996
WO	WO 96/24301	A1	8/1996
WO	WO 96/27337	A1	9/1996
WO	WO 96/31155	A1	10/1996
WO	WO 96/35464	A1	11/1996
WO	WO 96/39085	A1	12/1996
WO	WO 96/39086	A1	12/1996
WO	WO 96/39087	A1	12/1996
WO	WO 96/39088	A1	12/1996
WO	WO 96/39089	A1	12/1996
WO	WO 97/00646	A1	1/1997
WO	WO 97/00647	A1	1/1997
WO	WO 97/01989	A1	1/1997
WO	WO 97/06582	A1	2/1997
WO	WO 97/10763	A1	3/1997
WO	WO 97/10764	A1	3/1997
WO	WO 97/11648	A2	4/1997
WO	WO 97/11649	A1	4/1997
WO	WO 97/15237	A1	5/1997
WO	WO 97/24073	A1	7/1997
WO	WO 97/24993	A1	7/1997
WO	WO 97/30644	A1	8/1997
WO	WO 97/30659	A1	8/1997
WO	WO 97/34533	A1	9/1997
WO	WO 97/37598	A1	10/1997
WO	WO 97/39688	A2	10/1997
WO	WO 97/41767	A2	11/1997
WO	WO 98/01080	A1	1/1998
WO	WO 98/17180	A1	4/1998
WO	WO 98/22154	A2	5/1998
WO	WO 98/27880	A1	7/1998
WO	WO 98/30153	A1	7/1998
WO	WO 98/47436	A1	10/1998
WO	WO 98/58589	A1	12/1998
WO	WO 99/02090	A1	1/1999
WO	WO 99/03407	A1	1/1999
WO	WO 99/03408	A1	1/1999
WO	WO 99/03409	A1	1/1999
WO	WO 99/12483	A1	3/1999
WO	WO 99/12487	A1	3/1999
WO	WO 99/12488	A1	3/1999
WO	WO 99/15086	A1	4/1999
WO	WO 99/15091	A1	4/1999
WO	WO 99/23933	A2	5/1999
WO	WO 99/23959	A1	5/1999
WO	WO 99/25261	A1	5/1999
WO	WO 99/29244	A1	6/1999
WO	WO 99/34744	A1	7/1999
WO	WO 99/45849	A1	9/1999
WO	WO 99/48430	A1	9/1999
WO	WO 99/51158	A1	10/1999
WO	WO 00/24322	A1	5/2000
WO	WO 00/24330	A1	5/2000
WO	WO 00/33755	A1	6/2000
WO	WO 00/41638	A1	7/2000
WO	WO 00/48506	A1	8/2000
WO	WO 00/53112	A2	9/2000
WO	WO 00/54653	A1	9/2000
WO	WO 00/057796	A1	10/2000
WO	WO 00/64365	A1	11/2000
WO	WO 00/72762	A1	12/2000
WO	WO 00/72765	A1	12/2000
WO	WO 00/78222	A1	12/2000
WO	WO 01/03587	A1	1/2001
WO	WO 01/05702	A1	1/2001
WO	WO 01/010482	A1	2/2001
WO	WO 01/35845	A1	5/2001
WO	WO 01/54594	A1	8/2001
WO	WO 01/58371	A1	8/2001
WO	WO 01/62158	A2	8/2001
WO	WO 01/62161	A1	8/2001
WO	WO 01/62162	A1	8/2001
WO	WO 01/62163	A1	8/2001
WO	WO 01/62164	A2	8/2001
WO	WO 01/62169	A2	8/2001
WO	WO 01/78605	A2	10/2001
WO	WO 01/80757	A2	11/2001
WO	WO 01/91646	A1	12/2001
WO	WO 02/00121	A1	1/2002
WO	WO 02/07608	A2	1/2002
WO	WO 02/07618	A1	1/2002
WO	WO 02/17799	A1	3/2002
WO	WO 02/19920	A1	3/2002

(56) **References Cited**

FOREIGN PATENT DOCUMENTS

WO	WO 02/19932	A1	3/2002
WO	WO 02/26143	A1	4/2002
WO	WO 02/30297	A2	4/2002
WO	WO 02/32322	A2	4/2002
WO	WO 02/36028	A1	5/2002
WO	WO 02/43571	A2	6/2002
WO	WO 02/058568	A1	8/2002
WO	WO 02/060328	A1	8/2002
WO	WO 02/065933	A2	8/2002
WO	WO 02/067785	A2	9/2002
WO	WO 02/080781	A2	10/2002
WO	WO 02/085218	A2	10/2002
WO	WO 02/087586	A1	11/2002
WO	WO 02/098302	A1	12/2002
WO	WO 03/000138	A2	1/2003
WO	WO 03/001329	A2	1/2003
WO	WO 03/001986	A2	1/2003
WO	WO 03/013363	A1	2/2003
WO	WO 03/013372	A2	2/2003
WO	WO 03/015604	A2	2/2003
WO	WO 03/020106	A2	3/2003
WO	WO 03/020139	A2	3/2003
WO	WO 03/024339	A1	3/2003
WO	WO 2003/079909	A3	3/2003
WO	WO 03/030743	A2	4/2003
WO	WO 03/037193	A1	5/2003
WO	WO 2003/047436	A3	6/2003
WO	WO 03/055402	A1	7/2003
WO	WO 03/057048	A1	7/2003
WO	WO 03/057058	A1	7/2003
WO	WO 2003/063694	A1	8/2003
WO	WO 03/077769	A1	9/2003
WO	WO 03/079911	A1	10/2003
WO	WO 03/082126	A1	10/2003
WO	WO 03/086206	A1	10/2003
WO	WO 03/088845	A2	10/2003
WO	WO 03/090630	A2	11/2003
WO	WO 03/094743	A1	11/2003
WO	WO 03/094745	A1	11/2003
WO	WO 2003/094746	A1	11/2003
WO	WO 2003/094747	A1	11/2003
WO	WO 03/101313	A1	12/2003
WO	WO 03/105698	A2	12/2003
WO	WO 03/105702	A2	12/2003
WO	WO 2004/004578	A1	1/2004
WO	WO 2004/006980	A2	1/2004
WO	WO 2004/011037	A2	2/2004
WO	WO 2004/014238	A2	2/2004
WO	WO 2004/019769	A1	3/2004
WO	WO 2004/019803	A1	3/2004
WO	WO 2004/021868	A2	3/2004
WO	WO 2004/028585	A2	4/2004
WO	WO 2004/030554	A1	4/2004
WO	WO 2004/032754	A2	4/2004
WO	WO 2004/032760	A2	4/2004
WO	WO 2004/032762	A1	4/2004
WO	WO 2004/032763	A2	4/2004
WO	WO 2004/032783	A1	4/2004
WO	WO 2004/034875	A2	4/2004
WO	WO 2004/047626	A1	6/2004
WO	WO 2004/047653	A2	6/2004
WO	WO 2004/049956	A2	6/2004
WO	WO 2004/050971	A2	6/2004
WO	WO 2004/052426	A2	6/2004
WO	WO 2004/056276	A1	7/2004
WO	WO 2004/056277	A1	7/2004
WO	WO 2004/062516	A1	7/2004
WO	WO 2004/064600	A2	8/2004
WO	WO 2004/078050	A2	9/2004
WO	WO 2004/078051	A2	9/2004
WO	WO 2004/078236	A2	9/2004
WO	WO 2004/086987	A1	10/2004
WO	WO 2004/096015	A2	11/2004
WO	WO 2004/096057	A2	11/2004
WO	WO 2004/103157	A2	12/2004
WO	WO 2004/105593	A1	12/2004
WO	WO 2004/105621	A1	12/2004
WO	WO 2004/112618	A2	12/2004
WO	WO 2004/112652	A2	12/2004
WO	WO 2005/027983	A2	3/2005
WO	WO 2005/037329	A2	4/2005
WO	WO 2005/042041	A1	5/2005
WO	WO 2005/044078	A2	5/2005
WO	WO 2005/048809	A1	6/2005
WO	WO 2005/055846	A1	6/2005
WO	WO 2005/072634	A2	8/2005
WO	WO 2005/078892	A1	8/2005
WO	WO 2005/079675	A2	9/2005
WO	WO 2005/087128	A1	9/2005
WO	WO 2005/096954	A2	10/2005
WO	WO 2005/110243	A2	11/2005
WO	WO 2005/112806	A2	12/2005
WO	WO 2005/112808	A1	12/2005
WO	WO 2005/115251	A1	12/2005
WO	WO 2005/115253	A2	12/2005
WO	WO 2005/117735	A1	12/2005
WO	WO 2005/122936	A1	12/2005
WO	WO 2006/023486	A1	3/2006
WO	WO 2006/023578	A2	3/2006
WO	WO 2006/026520	A2	3/2006
WO	WO 2006/027014	A1	3/2006
WO	WO 2006/028314	A1	3/2006
WO	WO 2006/044490	A2	4/2006
WO	WO 2006/044581	A2	4/2006
WO	WO 2006/044810	A2	4/2006
WO	WO 2006/049852	A2	5/2006
WO	WO 2006/050360	A1	5/2006
WO	WO 2006/051252	A1	5/2006
WO	WO 2006/057702	A2	6/2006
WO	WO 2006/059067	A1	6/2006
WO	WO 2006/073581	A2	7/2006
WO	WO 2006/083748	A1	8/2006
WO	WO 2006/085389	A1	8/2006
WO	WO 2006/092563	A1	9/2006
WO	WO 2006/092565	A1	9/2006
WO	WO 2006/115958	A1	11/2006
WO	WO 2006/125940	A1	11/2006
WO	WO 2006/132992	A2	12/2006
WO	WO 2007/002180	A2	1/2007
WO	WO 2007/016290	A2	2/2007
WO	WO 2007/018898	A2	2/2007
WO	WO 2007/034161	A2	3/2007
WO	WO 2007/051000	A2	5/2007
WO	WO 2007/059233	A2	5/2007
WO	WO 2007/074430	A1	7/2007
WO	WO 2007/089603	A2	8/2007
WO	WO 2007/098220	A2	8/2007
WO	WO 2007/121579	A1	11/2007
WO	WO 2007/129121	A1	11/2007
WO	WO 2007/131110	A2	11/2007
WO	WO 2007/137304	A2	11/2007
WO	WO 2007/139734	A2	12/2007
WO	WO 2007/142625	A2	12/2007
WO	WO 2007/145825	A2	12/2007
WO	WO 2007/146987	A2	12/2007
WO	WO 2007/147439	A1	12/2007
WO	WO 2008/020964	A2	2/2008
WO	WO 2008/021687	A1	2/2008
WO	WO 2008/021969	A2	2/2008
WO	WO 2008/027972	A1	3/2008
WO	WO 2008/039237	A1	4/2008
WO	WO 2008/039249	A1	4/2008
WO	WO 2008/039270	A1	4/2008
WO	WO 2008/045383	A2	4/2008
WO	WO 2008/057281	A2	5/2008
WO	WO 2008/070763	A1	6/2008
WO	WO 2008/080148	A2	7/2008
WO	WO 2008/089404	A2	7/2008
WO	WO 2008/101080	A1	8/2008
WO	WO 2008/101228	A2	8/2008
WO	WO 2008/103797	A2	8/2008
WO	WO 2008/109123	A2	9/2008
WO	WO 2008/109125	A1	9/2008
WO	WO 2008/112912	A2	9/2008

(56) **References Cited**

FOREIGN PATENT DOCUMENTS

WO	WO 2008/118728	A1	10/2008
WO	WO 2008/118928	A2	10/2008
WO	WO 2008/124748	A1	10/2008
WO	WO 2008/131357	A1	10/2008
WO	WO 2009/005969	A2	1/2009
WO	WO 2009/022614	A1	2/2009
WO	WO 2009/023851	A1	2/2009
WO	WO 2009/033057	A2	3/2009
WO	WO 2009/039506	A1	3/2009
WO	WO 2009/046394	A1	4/2009
WO	WO 2009/066105	A1	5/2009
WO	WO 2009/067649	A2	5/2009
WO	WO 2009/091497	A2	7/2009
WO	WO 2009/120944	A2	10/2009
WO	WO 2009/137761	A2	11/2009
WO	WO 2009/143092	A1	11/2009
WO	WO 2009/143331	A1	11/2009
WO	WO 2009/150650	A2	12/2009
WO	WO 2009/152307	A1	12/2009
WO	WO 2010/028332	A2	3/2010
WO	WO 2010/030434	A1	3/2010
WO	WO 2010/045425	A1	4/2010
WO	WO 2010/050771	A2	5/2010
WO	WO 2010/054404	A1	5/2010
WO	WO 2010/056714	A1	5/2010
WO	WO 2010/063795	A1	6/2010
WO	WO 2010/090940	A1	8/2010
WO	WO 2010/093333	A1	8/2010
WO	WO 2010/098871	A2	9/2010
WO	WO 2011/008672	A2	1/2011
WO	WO 2011/013103	A1	2/2011
WO	WO 2011/044343	A2	4/2011
WO	WO 2011/060311	A2	5/2011
WO	WO 2011/084969	A1	7/2011
WO	WO 2011/127137	A1	10/2011
WO	WO 2012/006306	A2	1/2012
WO	WO 2012/009431	A2	1/2012
WO	WO 2012/021671	A1	2/2012
WO	WO 2012/040438	A1	3/2012
WO	WO 2012/044551	A1	4/2012
WO	WO 2012/044554	A1	4/2012
WO	WO 2012/044597	A1	4/2012
WO	WO 2012/044606	A2	4/2012
WO	WO 2012/044820	A1	4/2012
WO	WO 2012/044844	A2	4/2012
WO	WO 2012/044853	A1	4/2012
WO	WO 2012/044854	A1	4/2012
WO	WO 2012/058213	A2	5/2012
WO	WO 2012/068156	A2	5/2012
WO	WO 2012/109760	A1	8/2012
WO	WO 2012/127462	A1	9/2012
WO	WO 2012/135705	A1	10/2012
WO	WO 2012/143913	A2	10/2012
WO	WO 2012/148667	A2	11/2012
WO	WO 2012/148668	A2	11/2012
WO	WO 2012/148703	A2	11/2012
WO	WO 2012/160163	A1	11/2012
WO	WO 2012/166503	A1	12/2012
WO	WO 2013/009252	A2	1/2013
WO	WO 2013/009699	A2	1/2013
WO	WO 2013/023114	A1	2/2013
WO	WO 2013/036409	A1	3/2013
WO	WO 2013/043707	A2	3/2013
WO	WO 2013/043717	A1	3/2013
WO	WO 2013/043721	A2	3/2013
WO	WO 2013/062978	A2	5/2013
WO	WO 2013/116869	A1	8/2013
WO	WO 2013/148762	A2	10/2013
WO	WO 2013/167427	A1	11/2013
WO	WO 2013/188130	A1	12/2013
WO	WO 2014/004199	A1	1/2014
WO	WO 2014/004294	A2	1/2014
WO	WO 2014/008289	A2	1/2014
WO	WO 2014/134034	A2	9/2014
WO	WO 2014/172213	A2	10/2014
WO	WO 2015/032797	A1	3/2015
WO	WO 2015/148136	A1	10/2015
WO	WO 2015/148141	A1	10/2015
WO	WO 2015/153642	A1	10/2015
WO	WO 2007/014355	A2	2/2017

OTHER PUBLICATIONS

C.C. Thompson et al., "Peroral Endoscopic Reduction of Dilated Gastrojejunal Anastomosis After Roux-en-Y Gastric Bypass: A Possible New Option for Patients with Weight Regain," Surg Endosc (2006) vol. 20, pp. 1744-1748.

B.R. Coolman, DVM, MS et al., "Comparison of Skin Staples With Sutures for Anastomosis of the Small Intestine in Dogs," Abstract; http://www.blackwell-synergy.com/doi/abs/10.1053/jvet.2000.7539?cookieSet=1&journalCode=vsu which redirects to http://www3.interscience.wiley.com/journa1/119040681/abstract?CRETRY=1&SRETRY=0; [online] accessed: Sep. 22, 2008 (2 pages).

The Sodem Aseptic Battery Transfer Kit, Sodem Systems, (2000), 3 pages.

"Biomedical Coatings," Fort Wayne Metals, Research Products Corporation, obtained online at www.fwmetals.com on Jun. 21, 2010 (1 page).

Van Meer et al., "A Disposable Plastic Compact Wrist for Smart Minimally Invasive Surgical Tools," LAAS/CNRS (Aug. 2005).

Breedveld et al., "A New, Easily Miniaturized Sterrable Endoscope," IEEE Engineering in Medicine and Biology Magazine (Nov./Dec. 2005).

D. Tuite, Ed., "Get the Lowdown on Ultracapacitors," Nov. 15, 2007; [online] URL: http://electronicdesign.com/Articles/Print.cfm?ArticleID=17465, accessed Jan. 15, 2008 (5 pages).

Datasheet for Panasonic TK Relays Ultra Low Profile 2 A Polarized Relay, Copyright Matsushita Electric Works, Ltd. (Known of at least as early as Aug. 17, 2010), 5 pages.

ASTM procedure D2240-00, "Standard Test Method for Rubber Property-Durometer Hardness," (Published Aug. 2000).

ASTM procedure D2240-05, "Standard Test Method for Rubber Property-Durometer Hardness," (Published Apr. 2010).

Covidien Brochure, "Endo GIA™ Reloads with Tri-Staple™ Technology," (2010), 1 page.

Covidien Brochure, "Endo GIA™ Reloads with Tri-Staple™ Technology and Endo GIA™ Ultra Universal Staplers," (2010), 2 pages.

Covidien Brochure, "Endo GIA™ Black Reload with Tri-Staple™ Technology," (2012), 2 pages.

Covidien Brochure, "Endo GIA™ Curved Tip Reload with Tri-Staple™ Technology," (2012), 2 pages.

Covidien Brochure, "Endo GIA™ Reloads with Tri-Staple™ Technology," (2010), 2 pages.

Covidien Brochure, "Endo GIA™ Ultra Universal Stapler," (2010), 2 pages.

Miyata et al., "Biomolecule-Sensitive Hydrogels," Advanced Drug Delivery Reviews, 54 (2002) pp. 79-98.

Jeong et al., "Thermosensitive Sol-Gel Reversible Hydrogels," Advanced Drug Delivery Reviews, 54 (2002) pp. 37-51.

Byrne et al., "Molecular Imprinting Within Hydrogels," Advanced Drug Delivery Reviews, 54 (2002) pp. 149-161.

Qiu et al., "Environment-Sensitive Hydrogels for Drug Delivery," Advanced Drug Delivery Reviews, 53 (2001) pp. 321-339.

Hoffman, "Hydrogels for Biomedical Applications," Advanced Drug Delivery Reviews, 43 (2002) pp. 3-12.

Hoffman, "Hydrogels for Biomedical Applications," Advanced Drug Delivery Reviews, 54 (2002) pp. 3-12.

Peppas, "Physiologically Responsive Hydrogels," Journal of Bioactive and Compatible Polymers, vol. 6 (Jul. 1991) pp. 241-246.

Ebara, "Carbohydrate-Derived Hydrogels and Microgels," Engineered Carbohydrate-Based Materials for Biomedical Applications: Polymers, Surfaes, Dendrimers, Nanoparticles, and Hydrogels, Edited by Ravin Narain, 2011, pp. 337-345.

Peppas, Editor "Hydrogels in Medicine and Pharmacy," vol. I, Fundamentals, CRC Press, 1986.

(56) **References Cited**

OTHER PUBLICATIONS

Matsuda, "Thermodynamics of Formation of Porous Polymeric Membrane from Solutions," Polymer Journal, vol. 23, No. 5, pp. 435-444 (1991).
Young, "Microcellular foams via phase separation," Journal of Vacuum Science & Technology A 4(3), (May/Jun. 1986).
Chen et al., "Elastomeric Biomaterials for Tissue Engineering," Progress in Polymer Science 38 (2013), pp. 584-671.
Pitt et al., "Attachment of Hyaluronan to Metallic Surfaces," J. Biomed. Mater. Res. 68A: pp. 95-106, 2004.
Schellhammer et al., "Poly-Lactic-Acid for Coating of Endovascular Stents: Preliminary Results in Canine Experimental Av-Fistulae," Mat.-wiss. u. Werkstofftech., 32, pp. 193-199 (2001).
Solorio et al., "Gelatin Microspheres Crosslinked with Genipin for Local Delivery of Growth Factors," J. Tissue Eng. Regen. Med. (2010), 4(7): pp. 514-523.
Http://ninpgan.net/publications/51-100/89.pdf; 2004, Ning Pan, On Uniqueness of Fibrous Materials, Design & Nature II. Eds: Colins, M. and Brebbia, C. WIT Press, Boston, 493-504.
Covidien iDrive™ Ultra in Service Reference Card, "iDrive™ Ultra Powered Stapling Device," (4 pages).
Covidien iDrive™ Ultra Powered Stapling System ibrochure, "The Power of iDrive™ Ultra Powered Stapling System and Tri-Staple™ Technology," (23 pages).
Seils et al., Covidien Summary: Clinical Study "UCONN Biodynamics: Final Report on Results," (2 pages).
Covidien "iDrive™ Ultra Powered Stapling System, A Guide for Surgeons," (6 pages).
Covidien "iDrive™ Ultra Powered Stapling System, Cleaning and Sterilization Guide," (2 pages).
Covidien brochure "iDrive™ Ultra Powered Stapling System," (6 pages).
"Indian Standard: Automotive Vehicles—Brakes and Braking Systems (IS 11852-1:2001)", Mar. 1, 2001.
Fast, Versatile Blackfin Processors Handle Advanced Rfid Reader Applications; Analog Dialogue: vol. 40—Sep. 2006; http://www.analog.com/library/analogDialogue/archives/40-09/rfid.pdf; Wayback Machine to Feb. 15, 2012.
Serial Communication Protocol; Michael Lemmon Feb. 1, 2009; http://www3.nd.edu/~lemmon/courses/ee224/web-manual/web-manual/lab12/node2.html; Wayback Machine to Apr. 29, 2012.
Allegro MicroSystems, LLC, Automotive Full Bridge MOSFET Driver, A3941-DS, Rev. 5, 21 pages, http://www.allegrornicro.com/~/media/Files/Datasheets/A3941-Datasheet.ashx?la=en.
Patrick J. Sweeney: "RFID for Dummies", Mar. 11, 2010, pp. 365-365, XP055150775, ISBN: 978-1-11-805447-5, Retrieved from the Internet: URL: books.google.de/books?isbn=1118054474 [retrieved on Nov. 4, 2014]—book not attached.
Data Sheet of LM4F230H5QR, 2007.
Cuper et al., "The Use of Near-Infrared Light for Safe and Effective Visualization of Subsurface Blood Vessels to Facilitate Blood Withdrawal in Children," Medical Engineering & Physics, vol. 35, No. 4, pp. 433-440 (2013).
U.S. Appl. No. 12/031,573, filed Feb. 14, 2008.

* cited by examiner

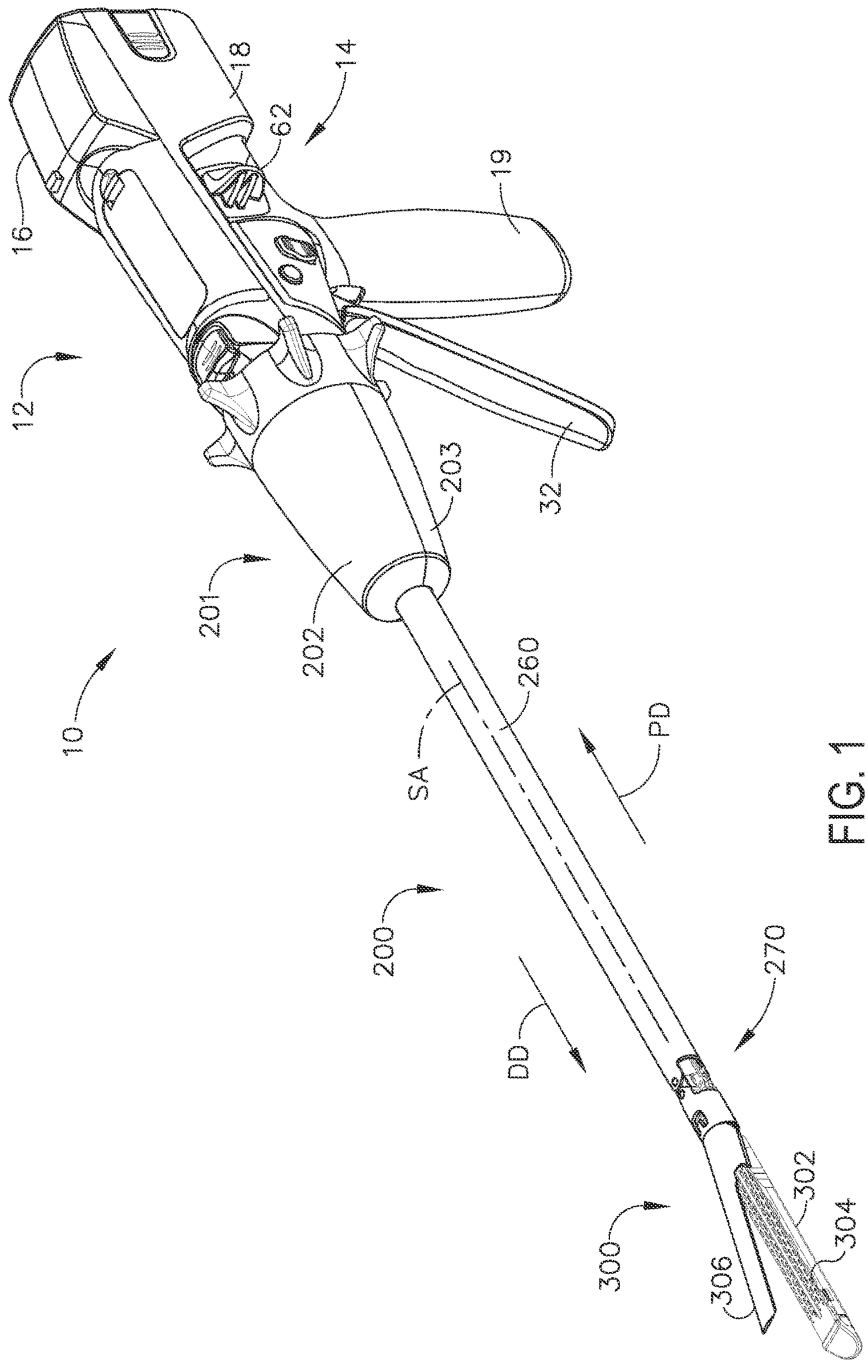
10
12
14
16
18
19
62
32
201
202
203
200
260
SA
PD
DD
270
300
302
304
306

FIG. 1

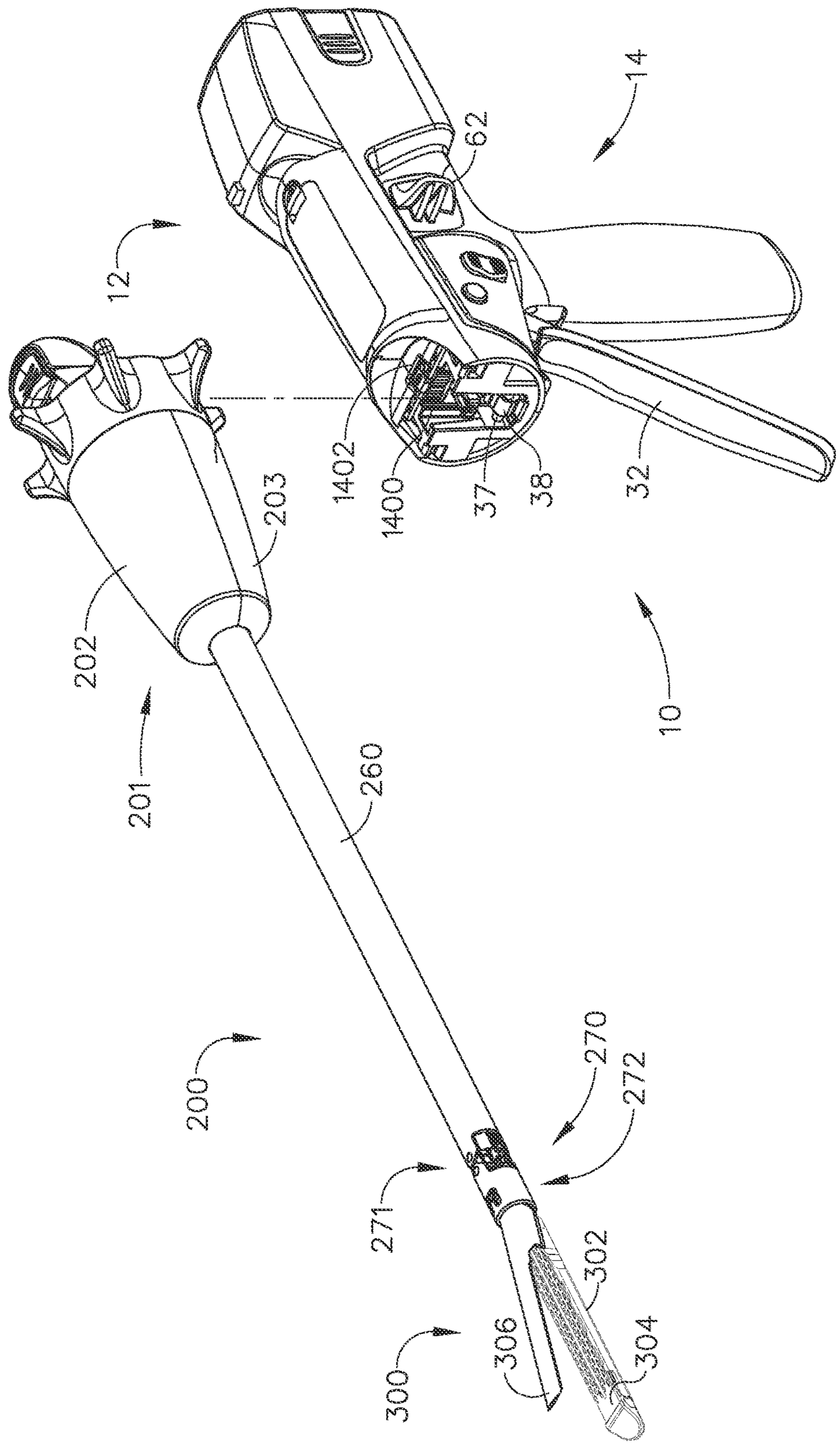
14
62
12
1402
1400
37
38
32
203
202
201
10
260
200
270
272
271
302
306
304
300

FIG. 2

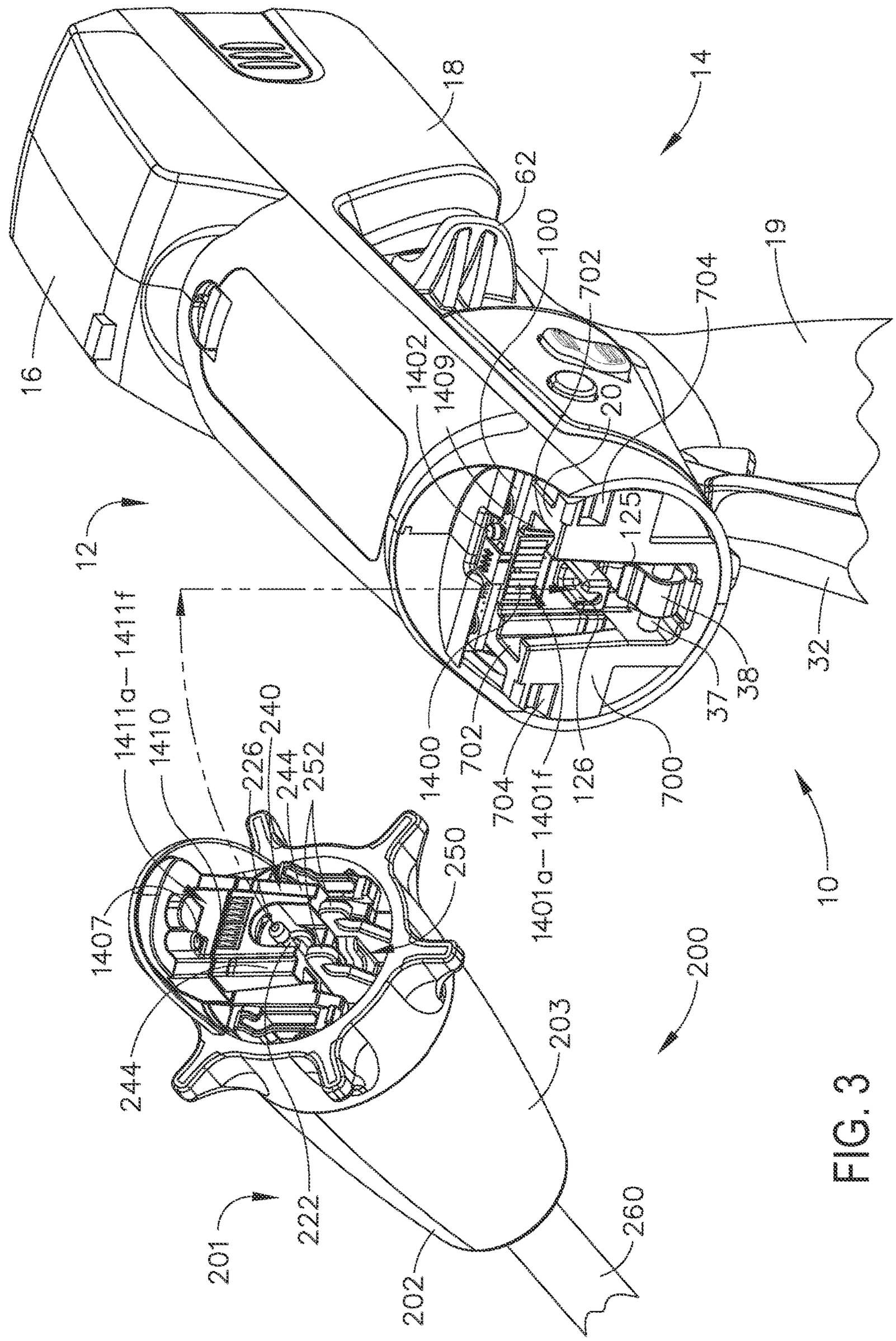
14
18
62
100
702
704
19
16
1402
1409
20
12
125
1411f
1411a
1410
240
226
244
252
1400
702
704
1401f
126
700
37
38
32
250
1401a
10
1407
200
244
203
222
201
202
260

FIG. 3

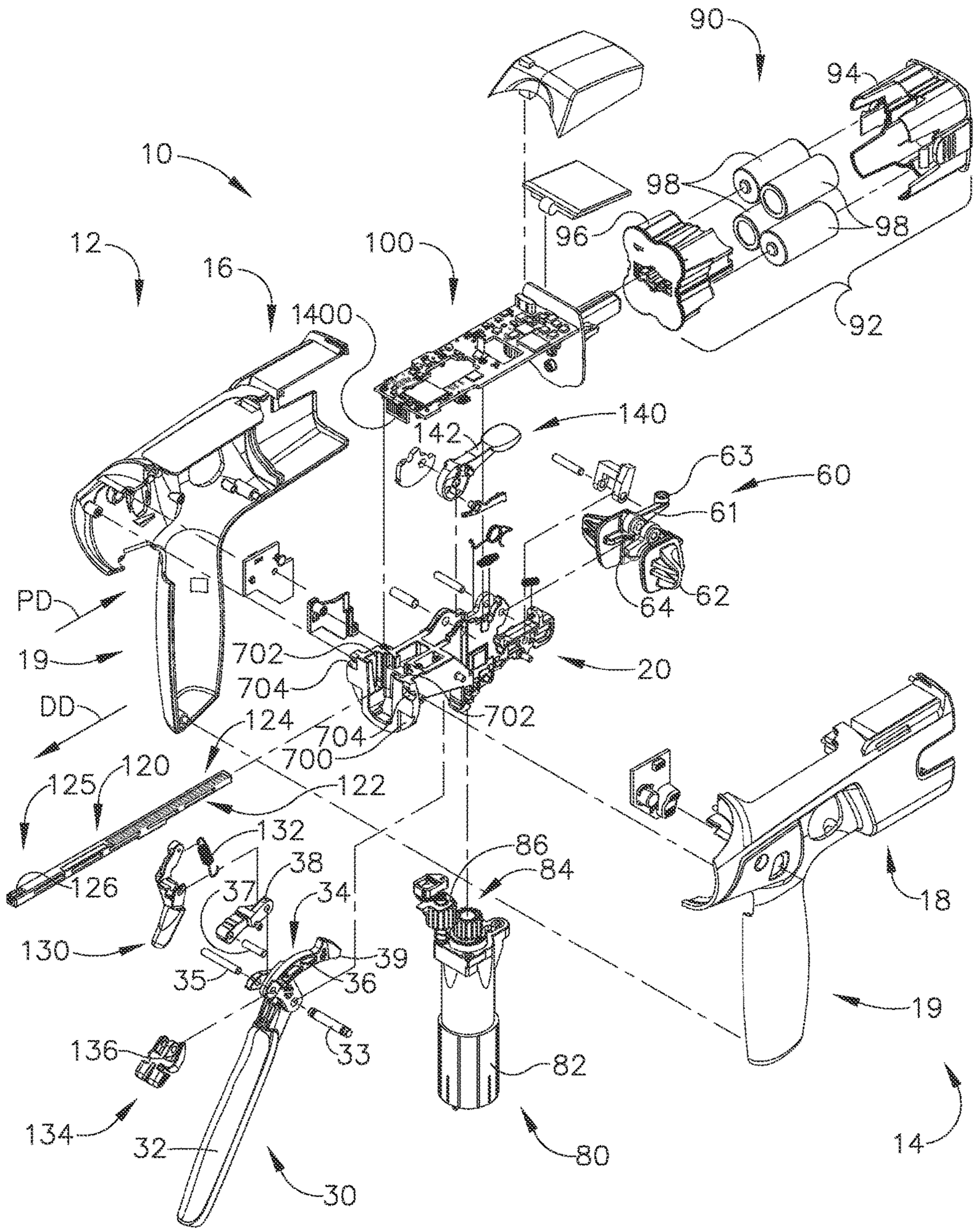
90
94
10
98
96
98
12
100
16
1400
92
140
142
63
60
61
PD
62
64
19
702
704
20
DD
124
702
704
700
125
120
122
132
86
84
126
38
37
34
18
130
39
35
36
19
136
33
82
134
32
80
14
30

FIG. 4

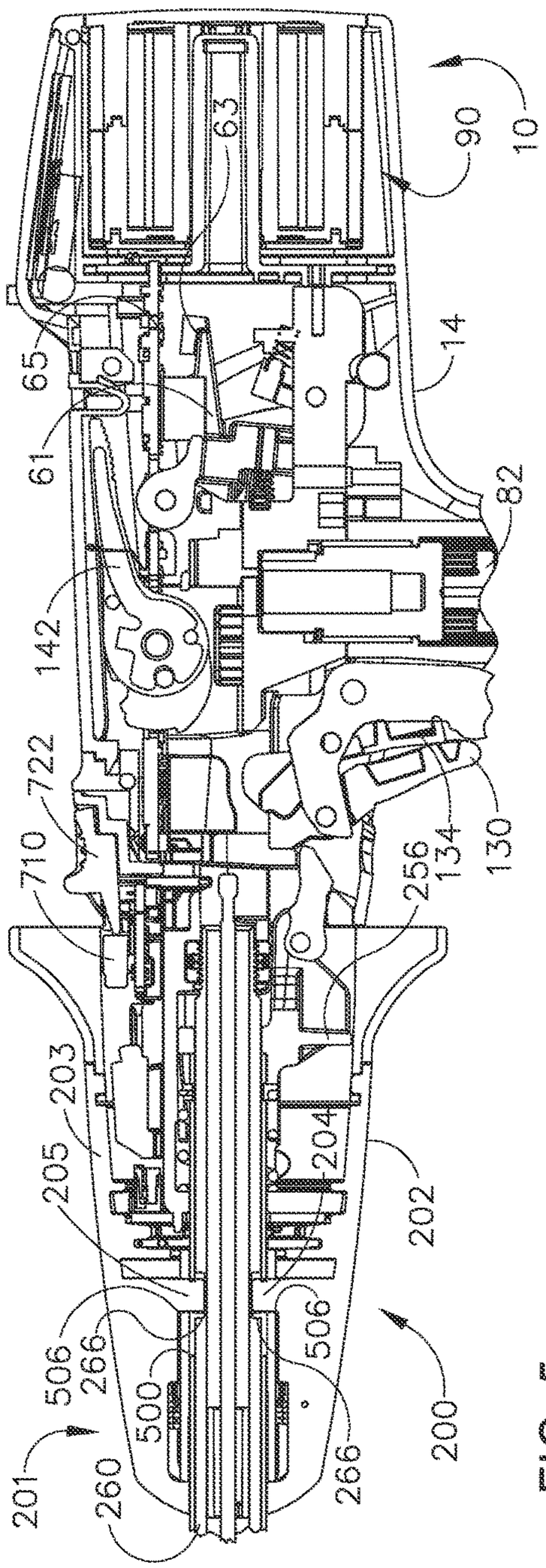
10
90
63
65
61
14
82
142
722
710
130
134
256
203
205
204
202
506
266
500
200
201
260

FIG. 5

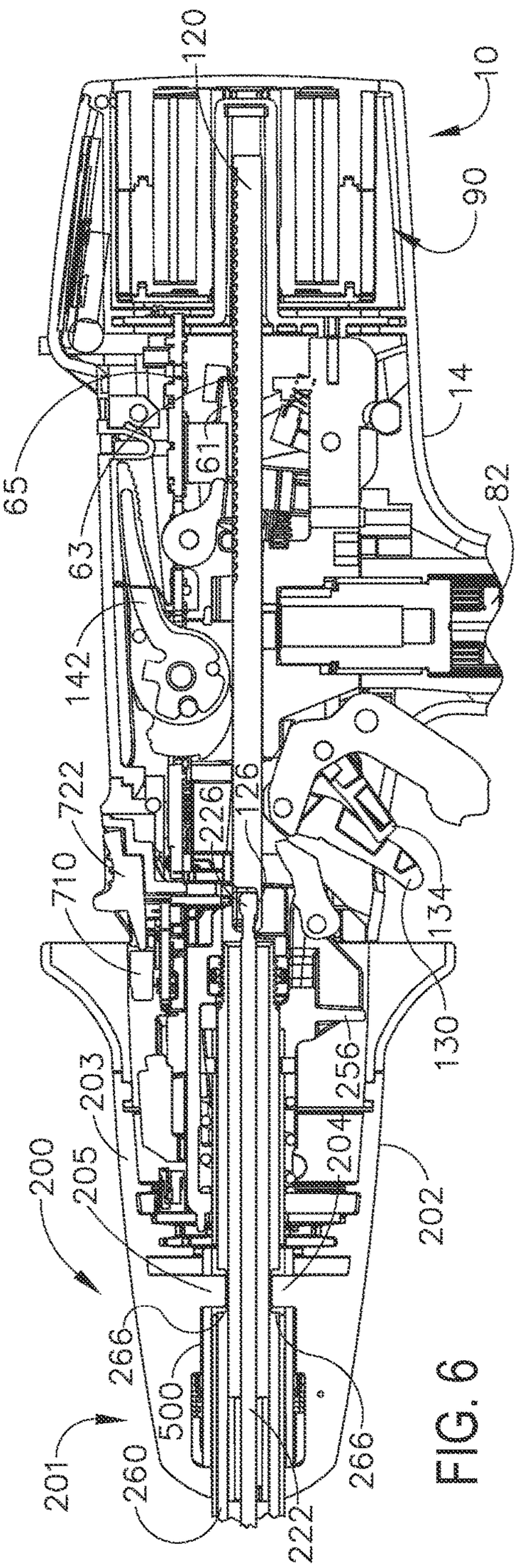
120
10
90
65
61
14
82
63
142
722
710
226
126
134
130
256
203
205
204
202
200
266
500
201
260
222

FIG. 6

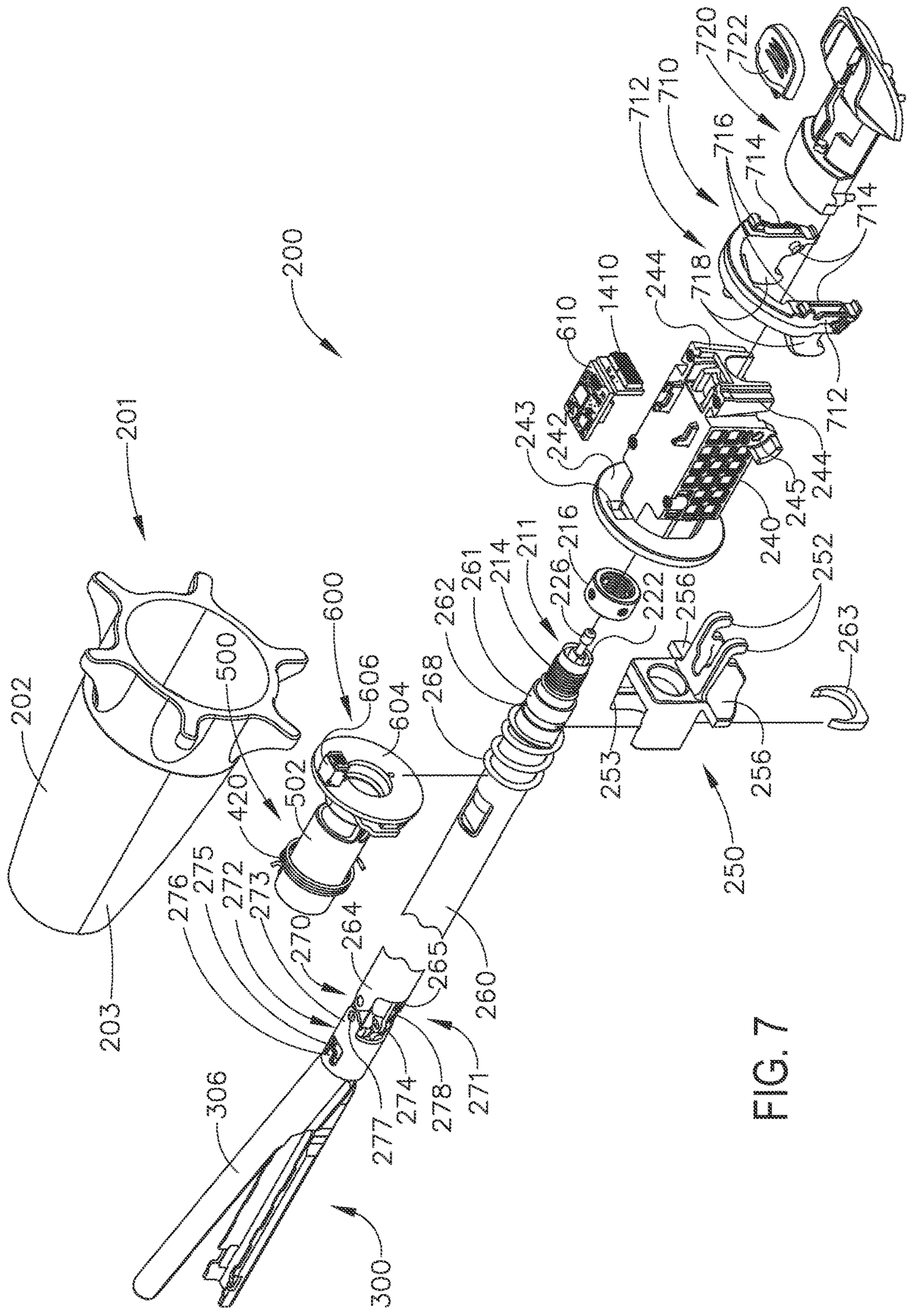
200
201
202
203
300
306
420
500
502
600
604
606
610
1410
240
242
243
244
245
250
252
253
256
260
261
262
263
264
265
268
270
271
272
273
274
275
276
277
278
210
211
214
216
222
226
710
712
714
716
718
720
722

FIG. 7

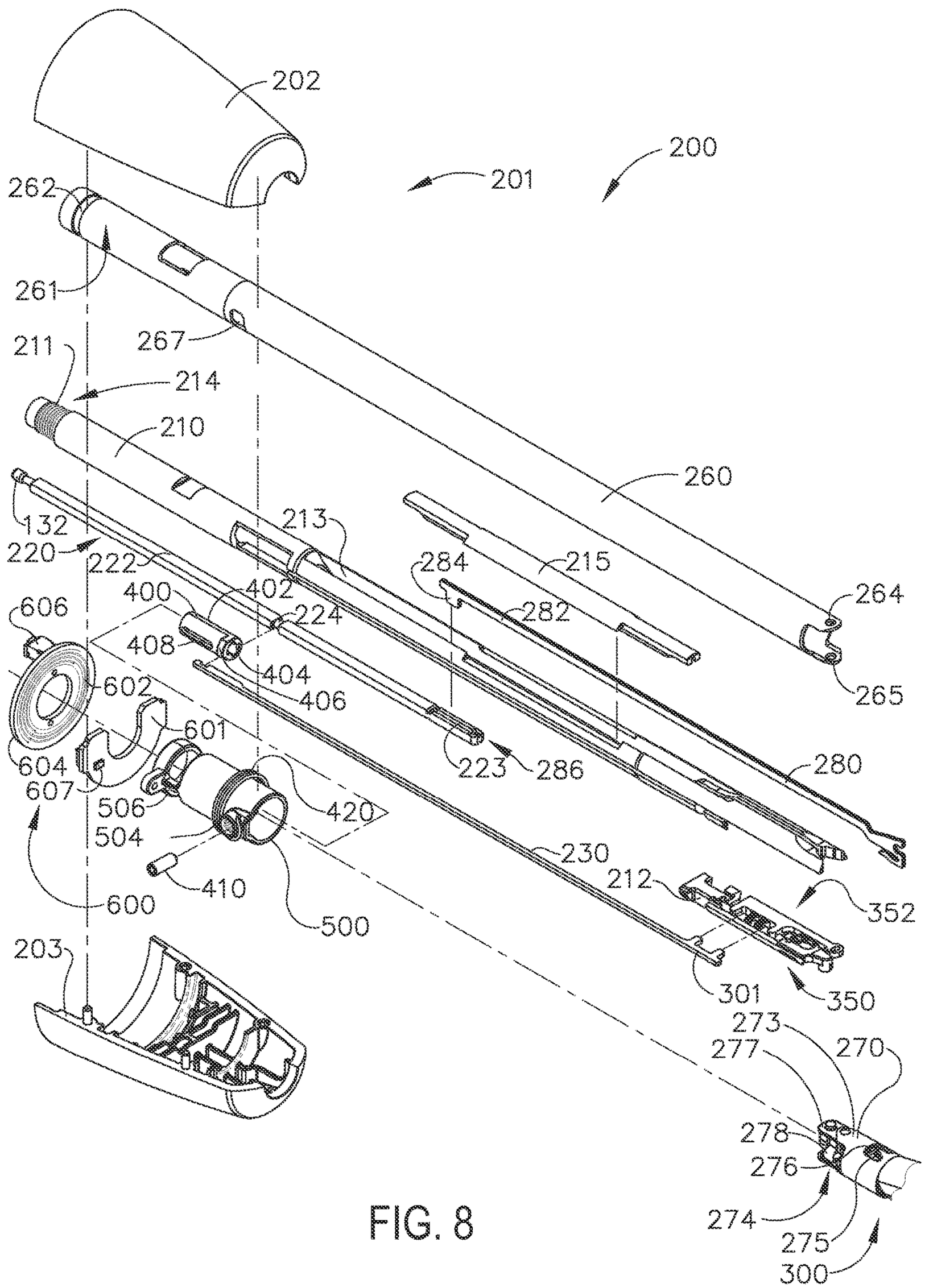
202
200
201
262
261
267
211
214
210
260
132
220
222
213
284
215
264
400
402
224
282
606
408
404
406
265
602
601
604
607
506
504
420
223
286
280
230
212
352
410
600
500
301
350
203
273
277
270
278
276
274
275
300

FIG. 8

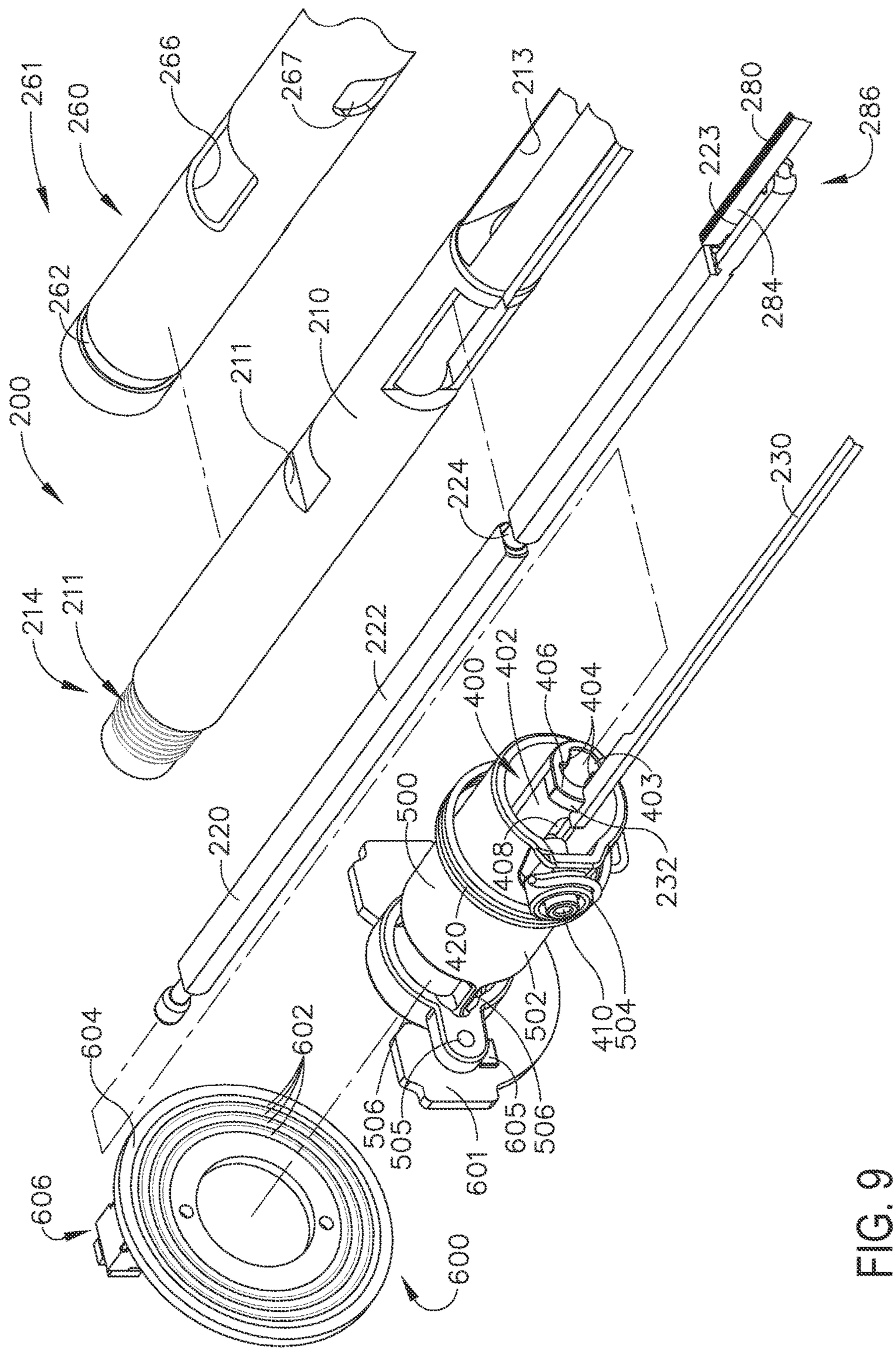
261
260
266
267
213
280
286
223
284
262
210
211
200
224
230
214
211
222
400
402
406
404
403
500
220
408
232
420
502
410
504
604
602
506
505
601
605
506
606
600

FIG. 9

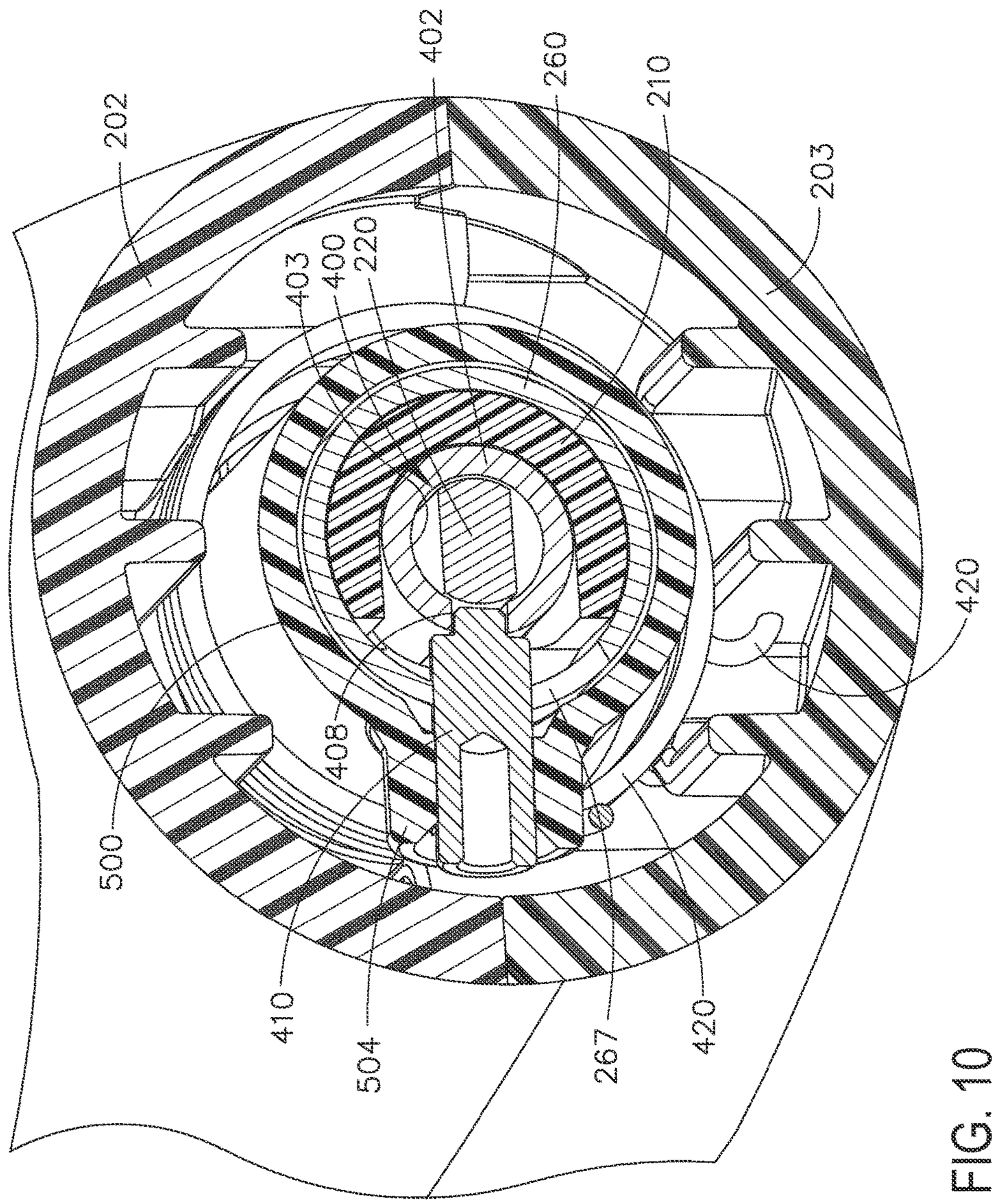

FIG. 10

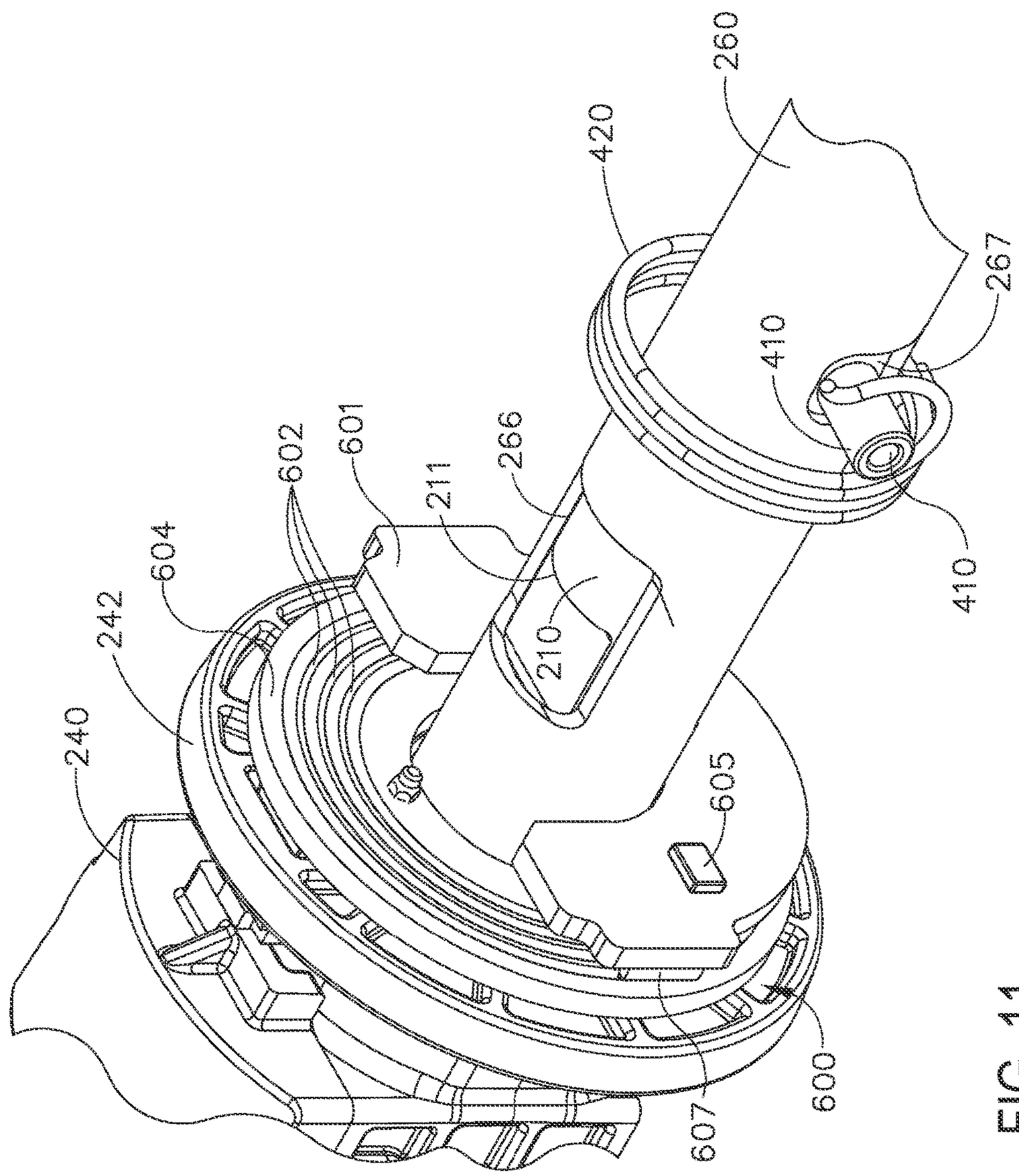

FIG. 11

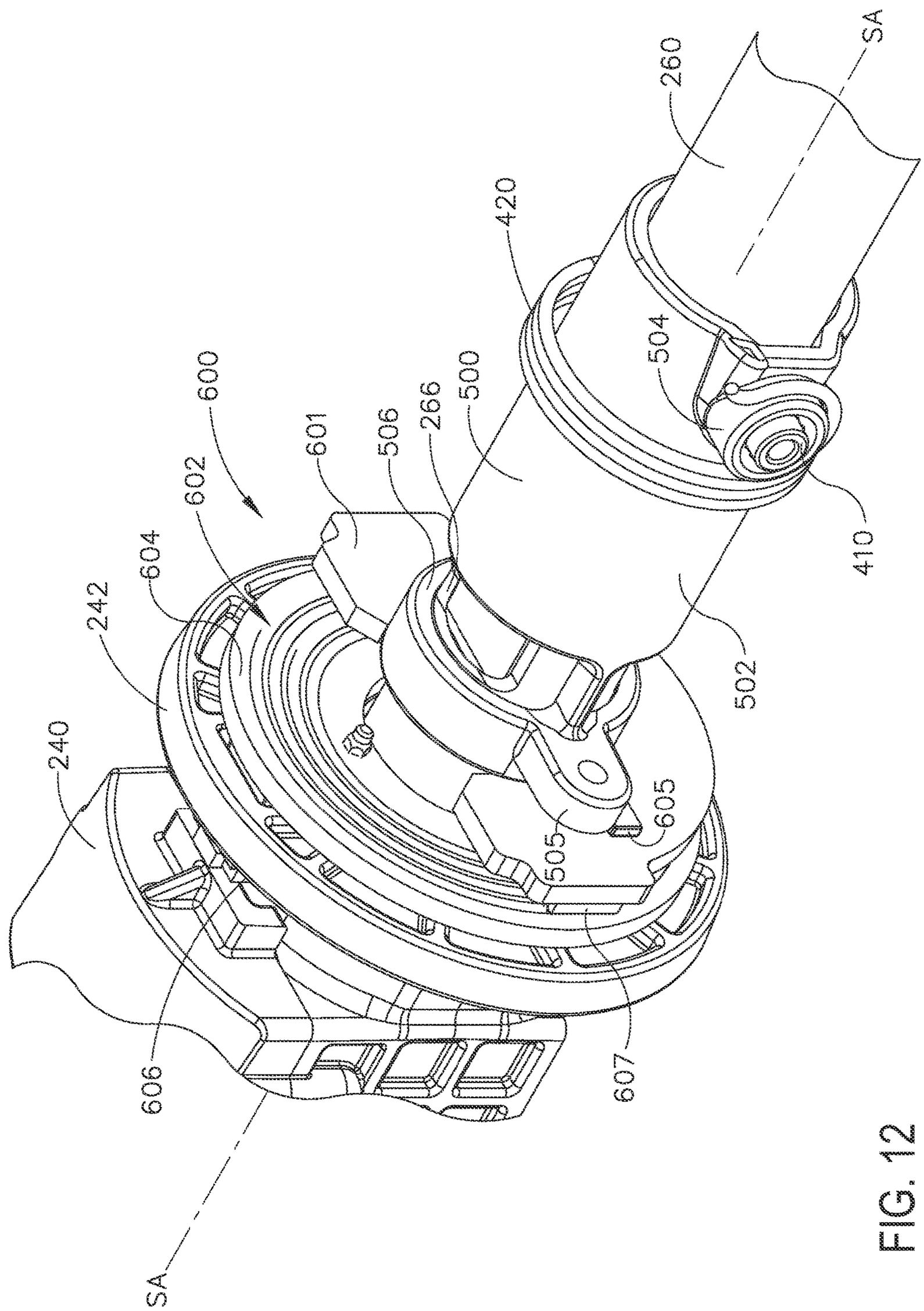
SA
260
420
504
600
601
506
266
500
602
604
242
240
410
502
605
505
606
607
SA

FIG. 12

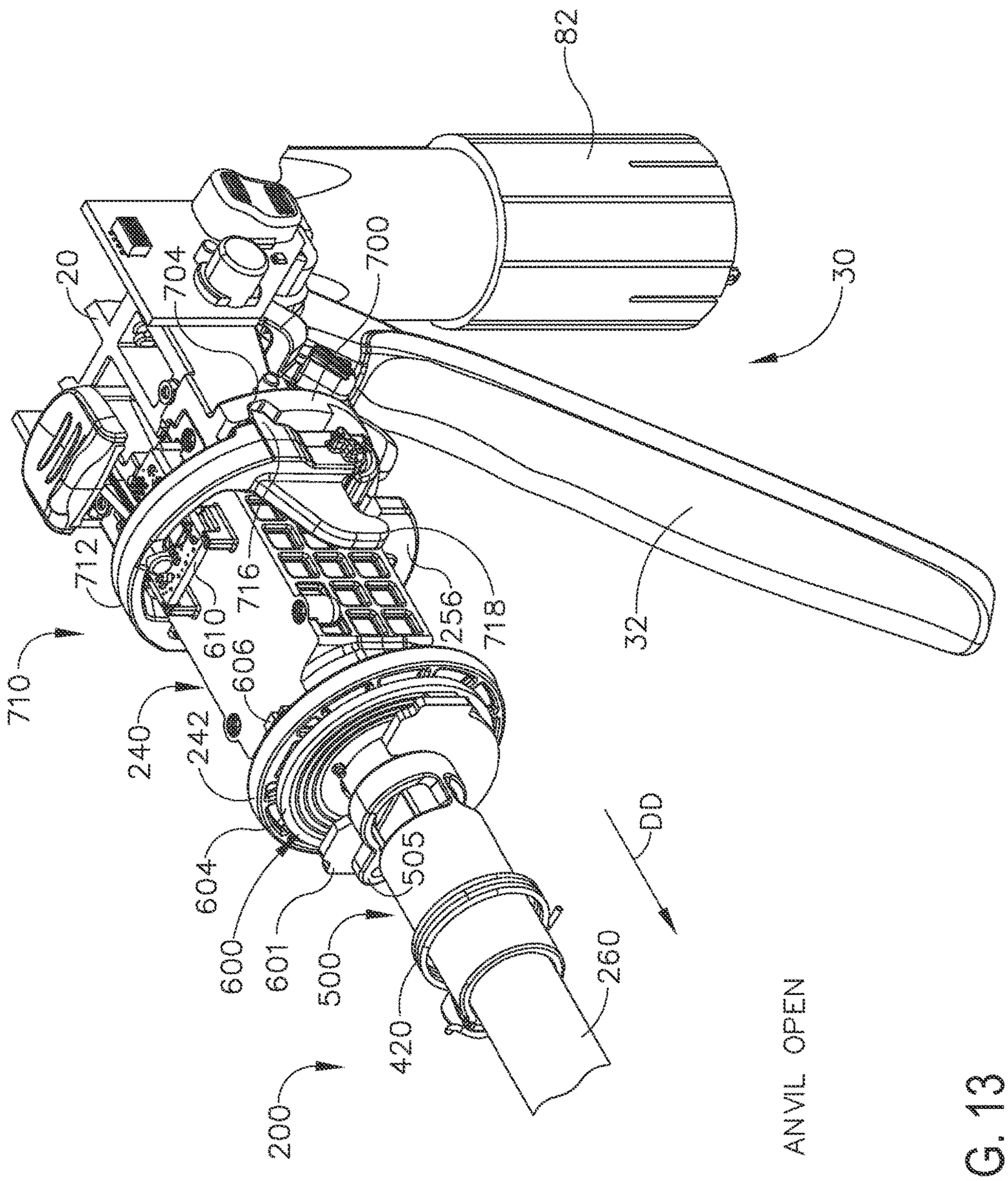
82
30
20
704
700
712
716
610
606
256
718
32
710
240
242
604
600
601
500
505
DD
260
420
200
ANVIL OPEN

FIG. 13

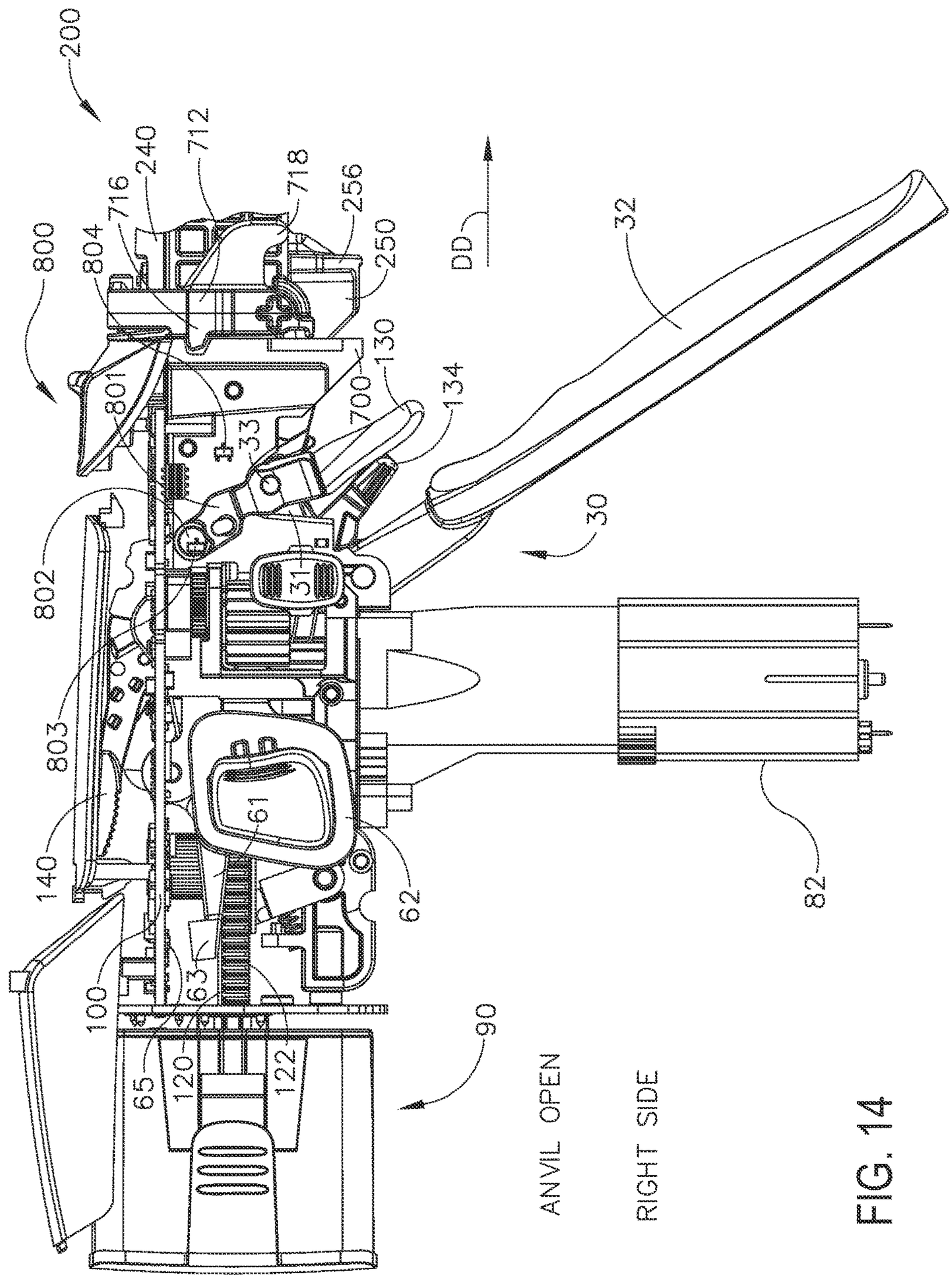
200
800
804
716
240
712
718
256
250
DD
32
130
134
700
33
801
802
803
140
31
30
61
62
82
100
63
65
120
122
90
ANVIL OPEN
RIGHT SIDE

FIG. 14

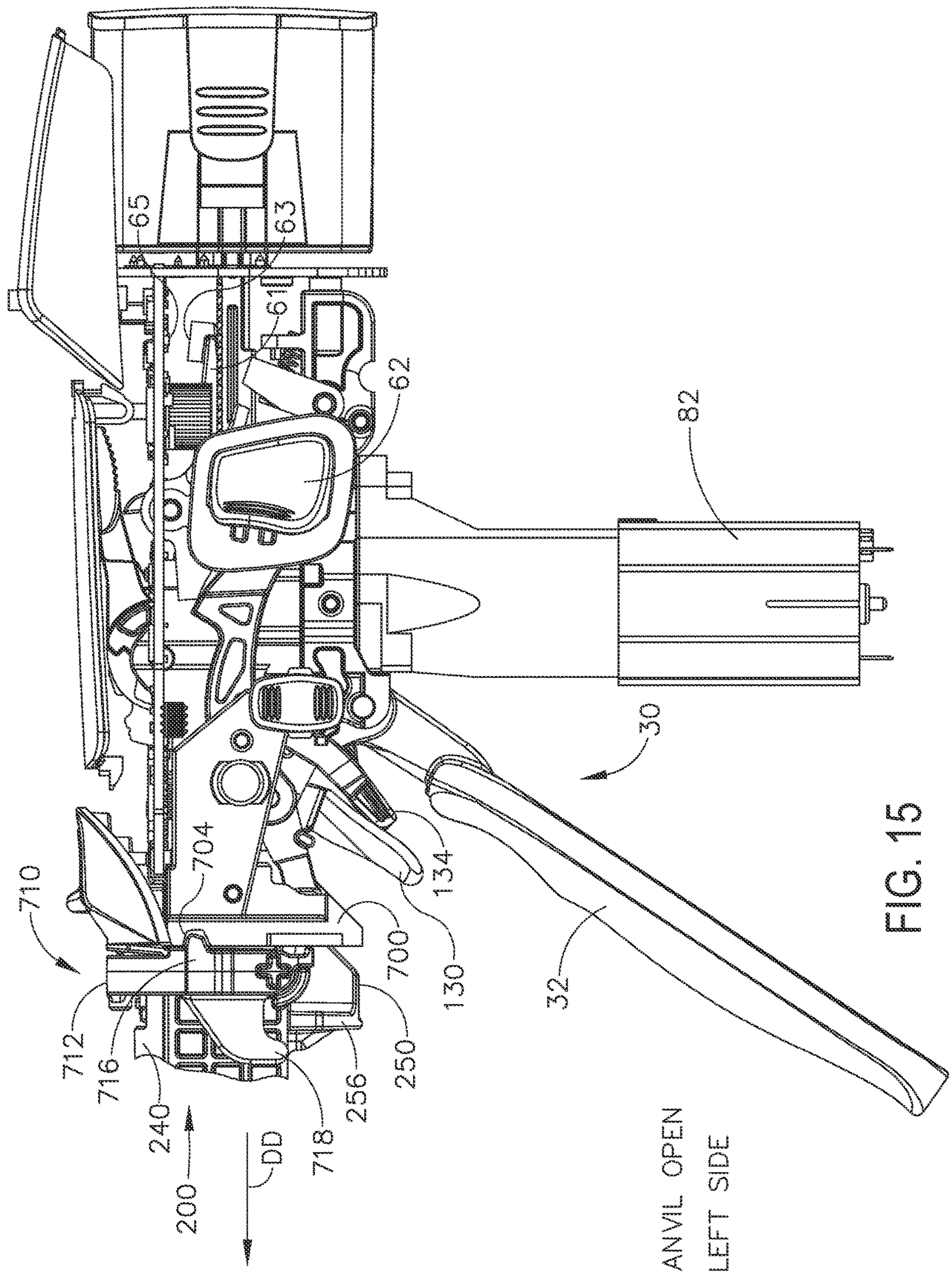

FIG. 15

ANVIL OPEN
LEFT SIDE

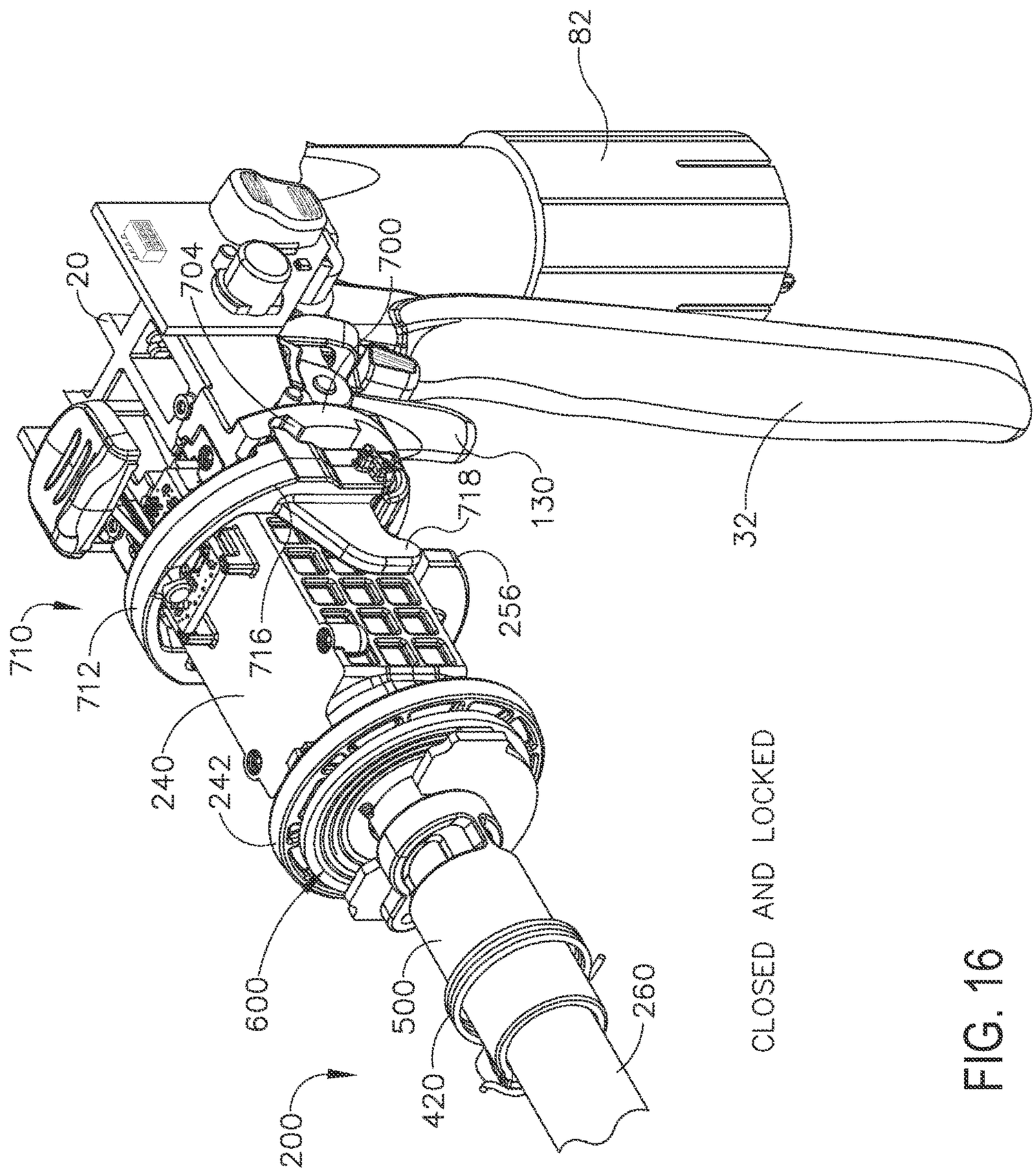

CLOSED AND LOCKED

FIG. 16

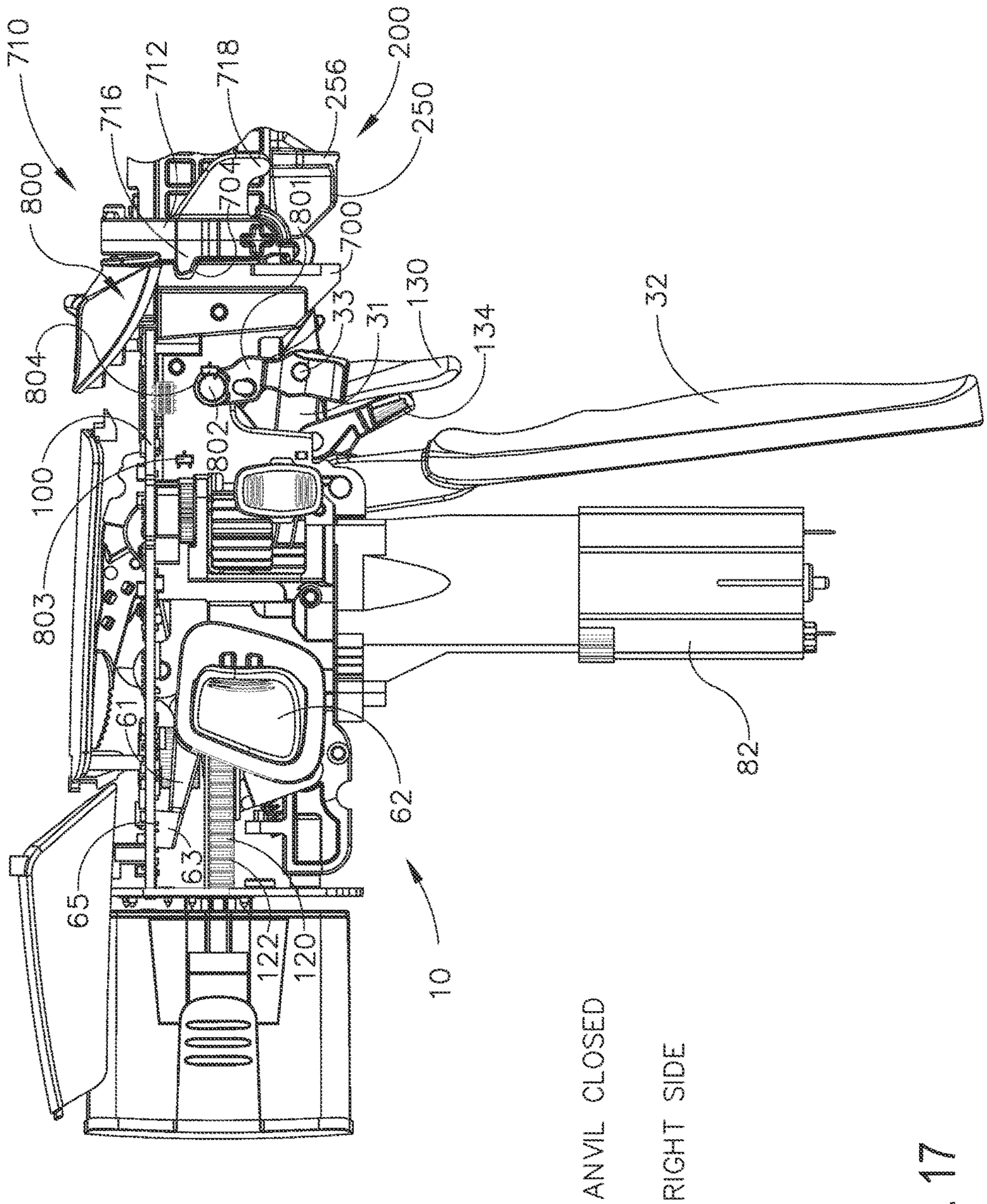
710
716
712
718
256
200
250
800
704
801
700
804
33
31
130
134
32
100
802
803
61
62
82
65
63
122
120
10
ANVIL CLOSED
RIGHT SIDE

FIG. 17

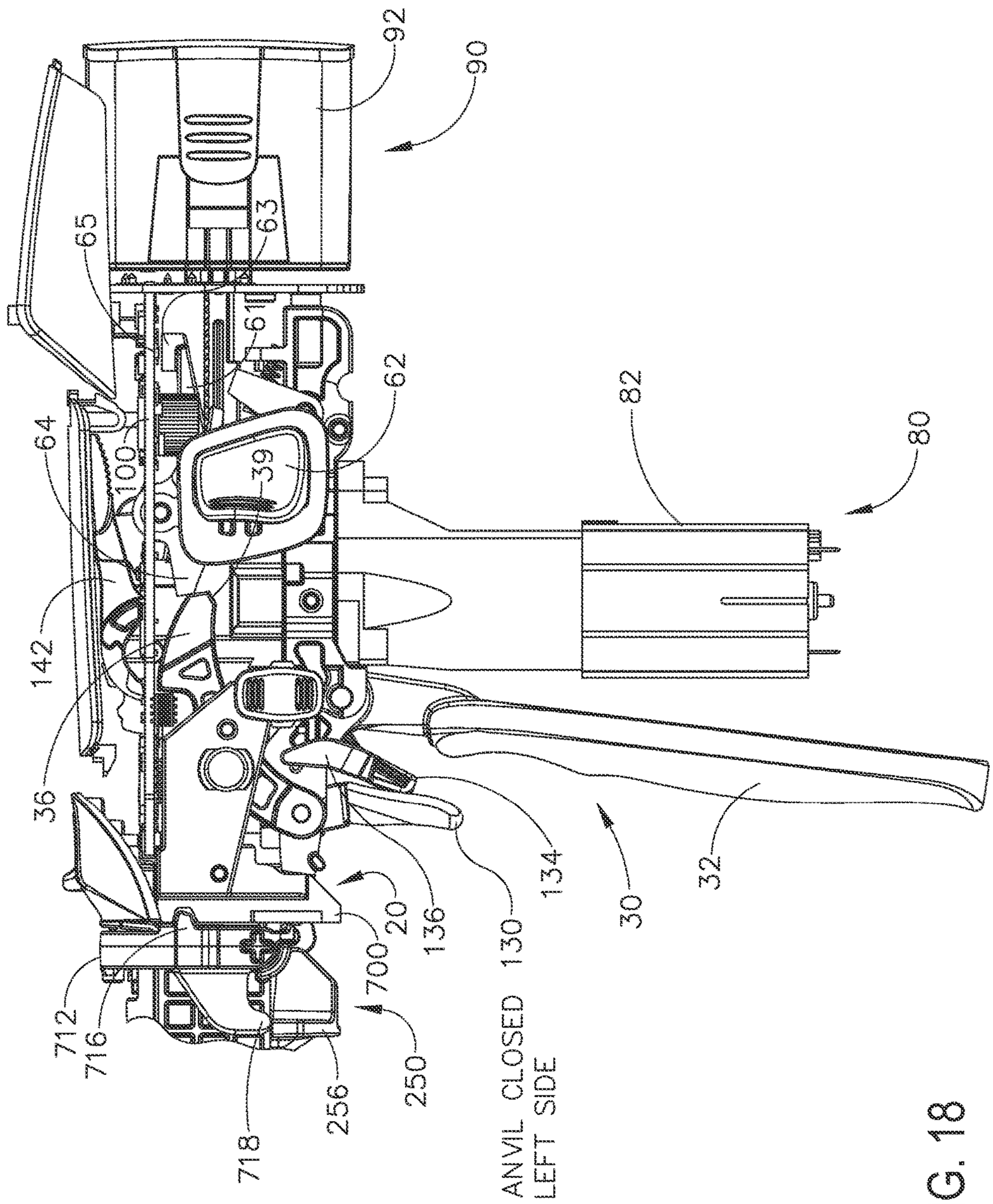
92
90
65
63
61
62
82
80
64
100
39
142
36
134
32
30
20
136
130
700
712
716
718
256
250
ANVIL CLOSED
LEFT SIDE

FIG. 18

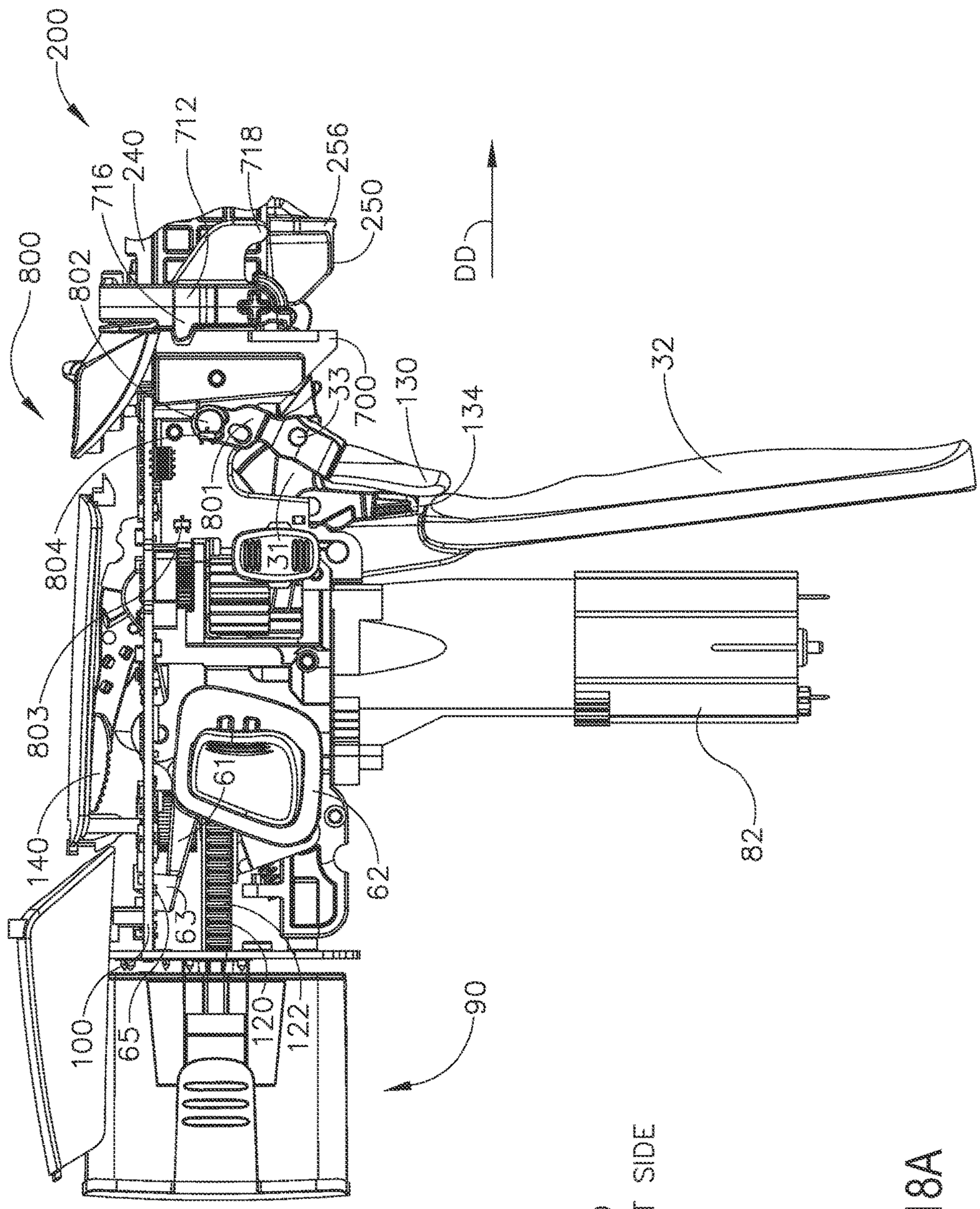

FIRED
RIGHT SIDE

FIG. 18A

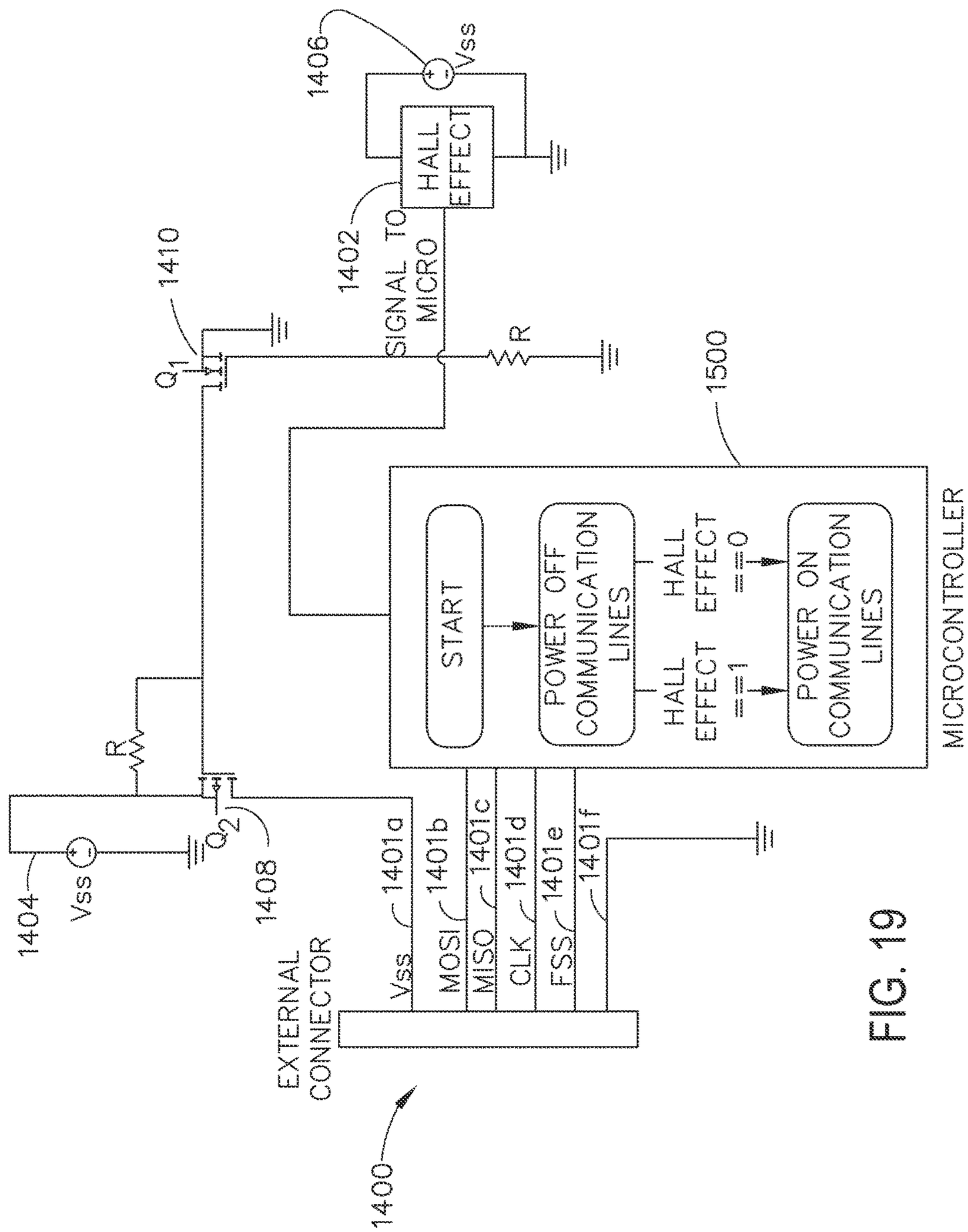
1400
EXTERNAL CONNECTOR
Vss
MOSI
MISO
CLK
FSS
1401a
1401b
1401c
1401d
1401e
1401f
1404
Vss
1408
Q_2
R
Q_1
1410
1402
SIGNAL TO MICRO
HALL EFFECT
1406
Vss
R
1500
START
POWER OFF COMMUNICATION LINES
HALL EFFECT ==1
HALL EFFECT ==0
POWER ON COMMUNICATION LINES
MICROCONTROLLER

FIG. 19

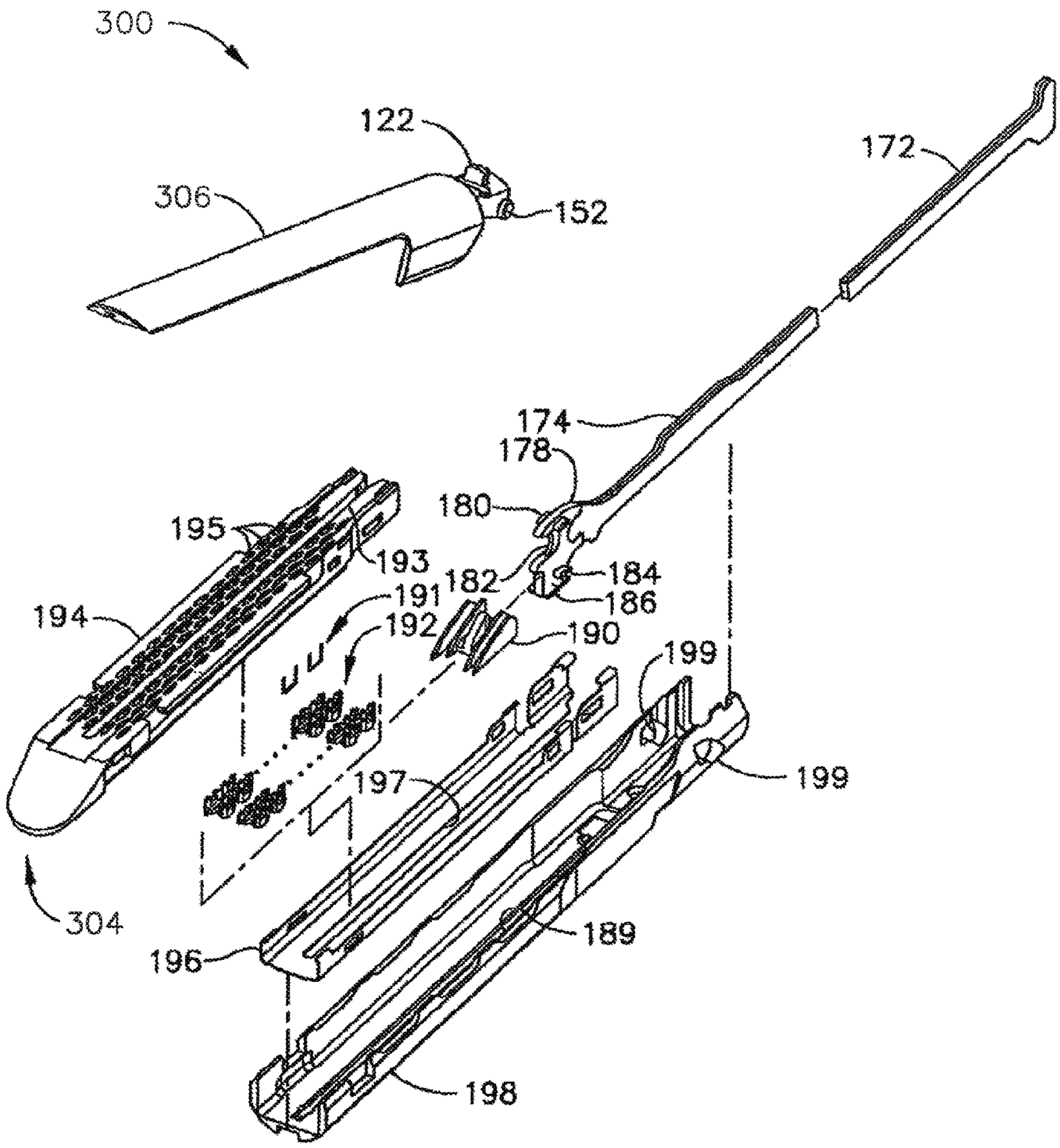
300
122
306
152
172
174
178
180
195
193
182
184
186
191
192
190
194
199
199
197
304
189
196
198

FIG. 20

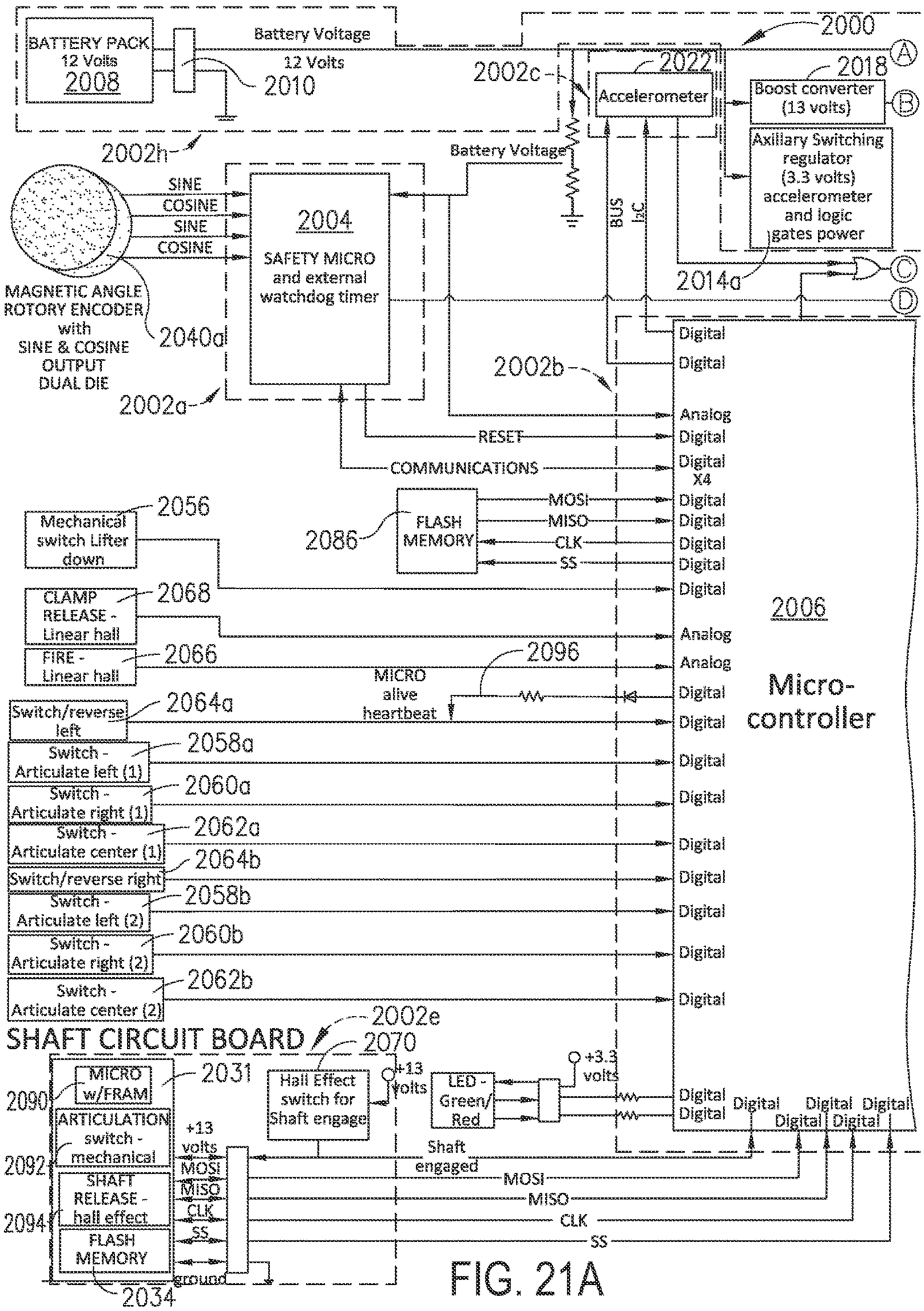
BATTERY PACK
12 Volts
2008
Battery Voltage
12 Volts
2010
2002h
2000
2002c
2022
Accelerometer
2018
Boost converter
(13 volts)
A
B
Axillary Switching
regulator
(3.3 volts)
accelerometer
and logic
gates power
2014a
C
D
Battery Voltage
BUS
I²C
SINE
COSINE
SINE
COSINE
2004
SAFETY MICRO
and external
watchdog timer
MAGNETIC ANGLE
ROTORY ENCODER
with
SINE & COSINE
OUTPUT
DUAL DIE
2040a
2002a
2002b
Digital
Digital
Analog
RESET
Digital
COMMUNICATIONS
Digital
X4
MOSI
MISO
CLK
SS
FLASH
MEMORY
2086
Mechanical
switch Lifter
down
2056
CLAMP
RELEASE -
Linear hall
2068
FIRE -
Linear hall
2066
2096
MICRO
alive
heartbeat
Switch/reverse
left
2064a
Switch -
Articulate left (1)
2058a
Switch -
Articulate right (1)
2060a
Switch -
Articulate center (1)
2062a
Switch/reverse right
2064b
Switch -
Articulate left (2)
2058b
Switch -
Articulate right (2)
2060b
Switch -
Articulate center (2)
2062b
2006
Micro-
controller
SHAFT CIRCUIT BOARD
2002e
2070
MICRO
w/FRAM
2031
2090
ARTICULATION
switch -
mechanical
2092
SHAFT
RELEASE -
hall effect
2094
FLASH
MEMORY
2034
+13
volts
MOSI
MISO
CLK
SS
ground
Hall Effect
switch for
Shaft engage
+13
volts
LED -
Green/
Red
+3.3
volts
Shaft
engaged
MOSI
MISO
CLK
SS

FIG. 21A

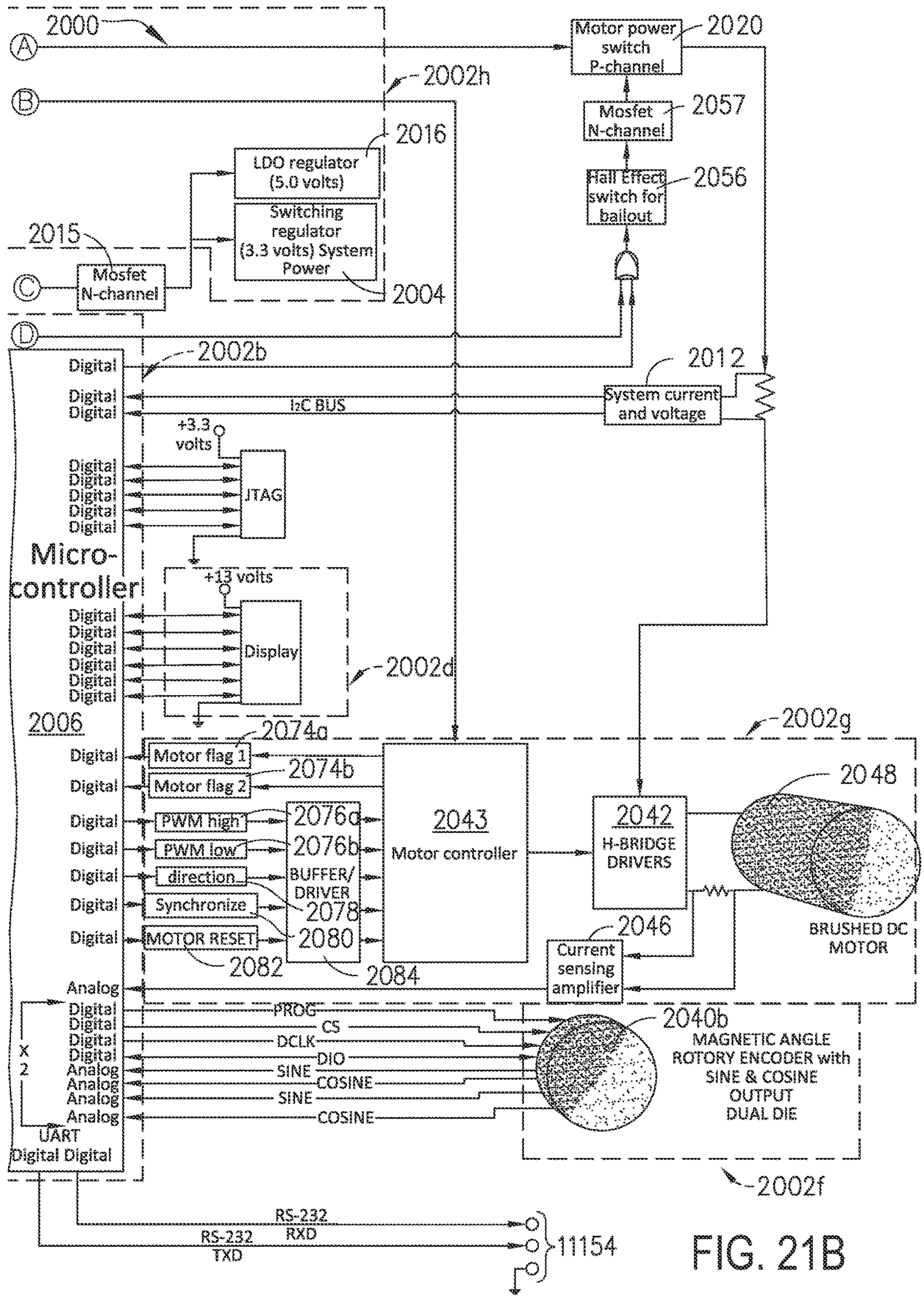
2000
A
B
C
D
2002h
Motor power switch P-channel
2020
Mosfet N-channel
2057
Hall Effect switch for bailout
2056
LDO regulator (5.0 volts)
2016
Switching regulator (3.3 volts) System Power
2004
2015
Mosfet N-channel
2002b
Digital
I2C BUS
System current and voltage
2012
+3.3 volts
JTAG
Micro-controller
+13 volts
Display
2002d
2006
2002g
Motor flag 1
2074a
Motor flag 2
2074b
PWM high
2076a
PWM low
2076b
direction
Synchronize
MOTOR RESET
BUFFER/ DRIVER
2078
2080
2082
2084
2043
Motor controller
2042
H-BRIDGE DRIVERS
2048
BRUSHED DC MOTOR
2046
Current sensing amplifier
Analog
PROG
CS
DCLK
DIO
SINE
COSINE
X 2
UART
2040b
MAGNETIC ANGLE ROTORY ENCODER with SINE & COSINE OUTPUT DUAL DIE
2002f
RS-232 RXD
RS-232 TXD
11154

FIG. 21B

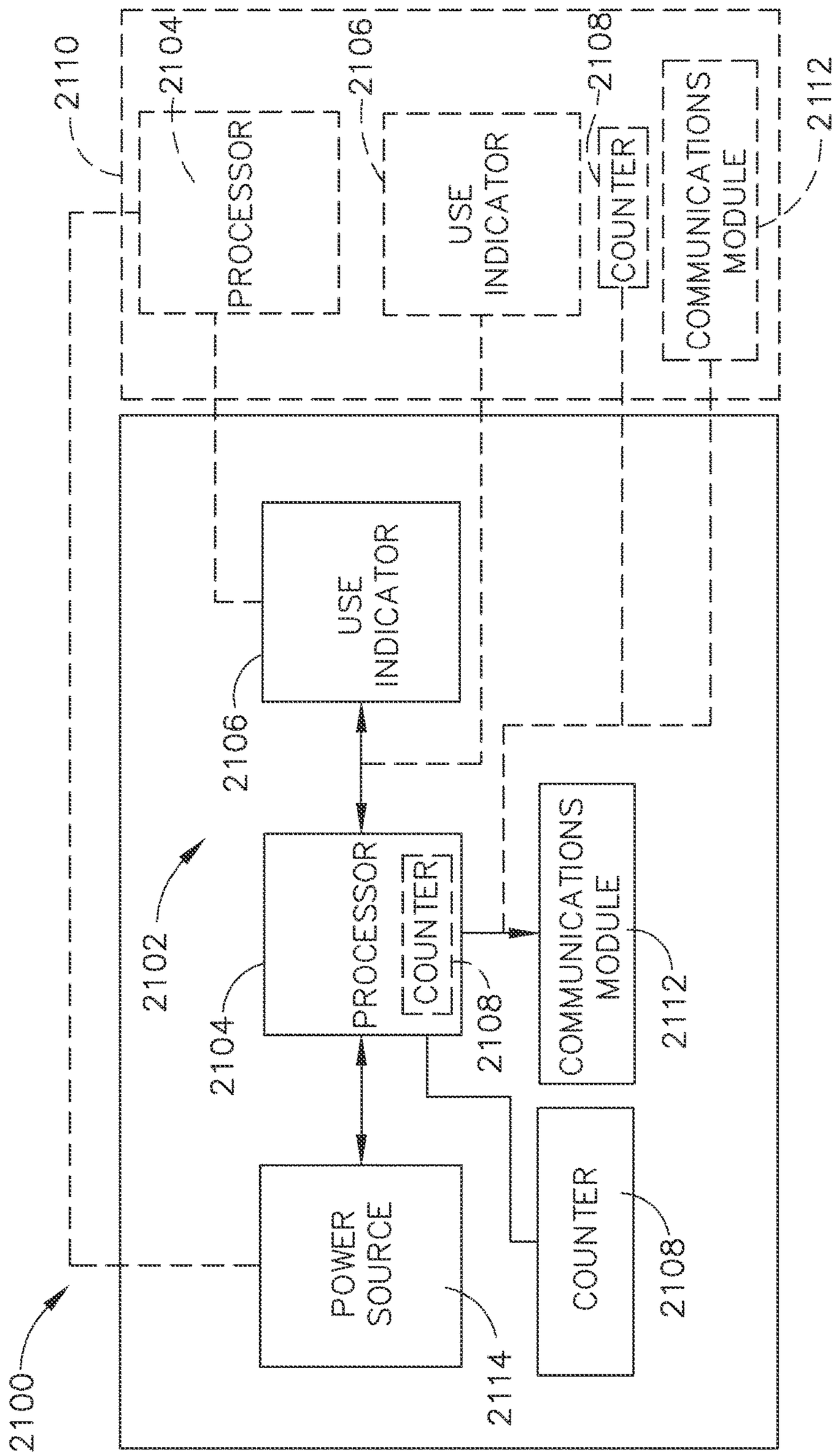
2100
2102
2104
PROCESSOR
COUNTER
2106
USE INDICATOR
2108
COMMUNICATIONS MODULE
2112
POWER SOURCE
2114
2110
2104
PROCESSOR
2106
USE INDICATOR
2108
COUNTER
COMMUNICATIONS MODULE
2112

FIG. 22

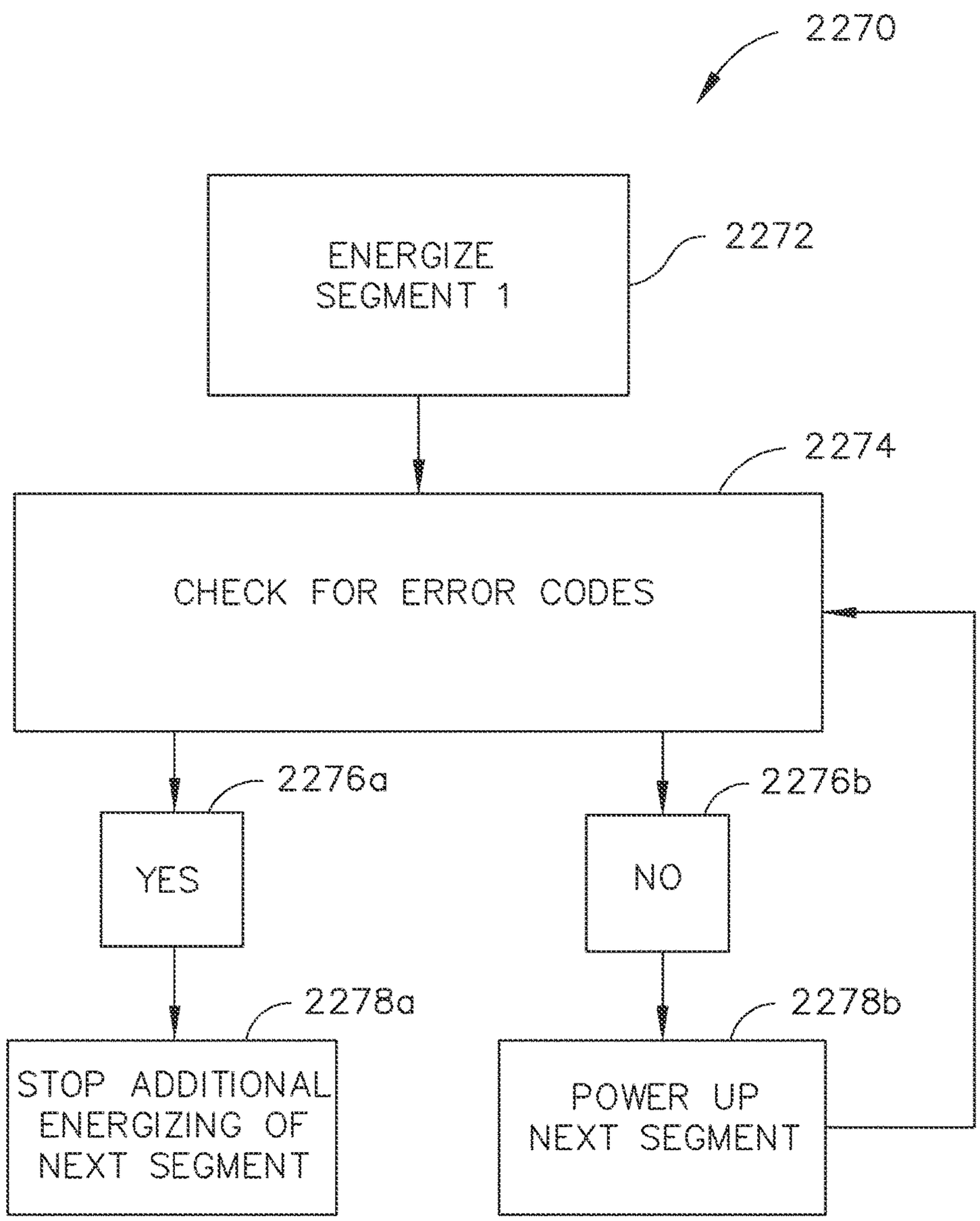
2270
ENERGIZE SEGMENT 1
2272
2274
CHECK FOR ERROR CODES
2276a
YES
2276b
NO
2278a
STOP ADDITIONAL ENERGIZING OF NEXT SEGMENT
2278b
POWER UP NEXT SEGMENT

FIG. 23

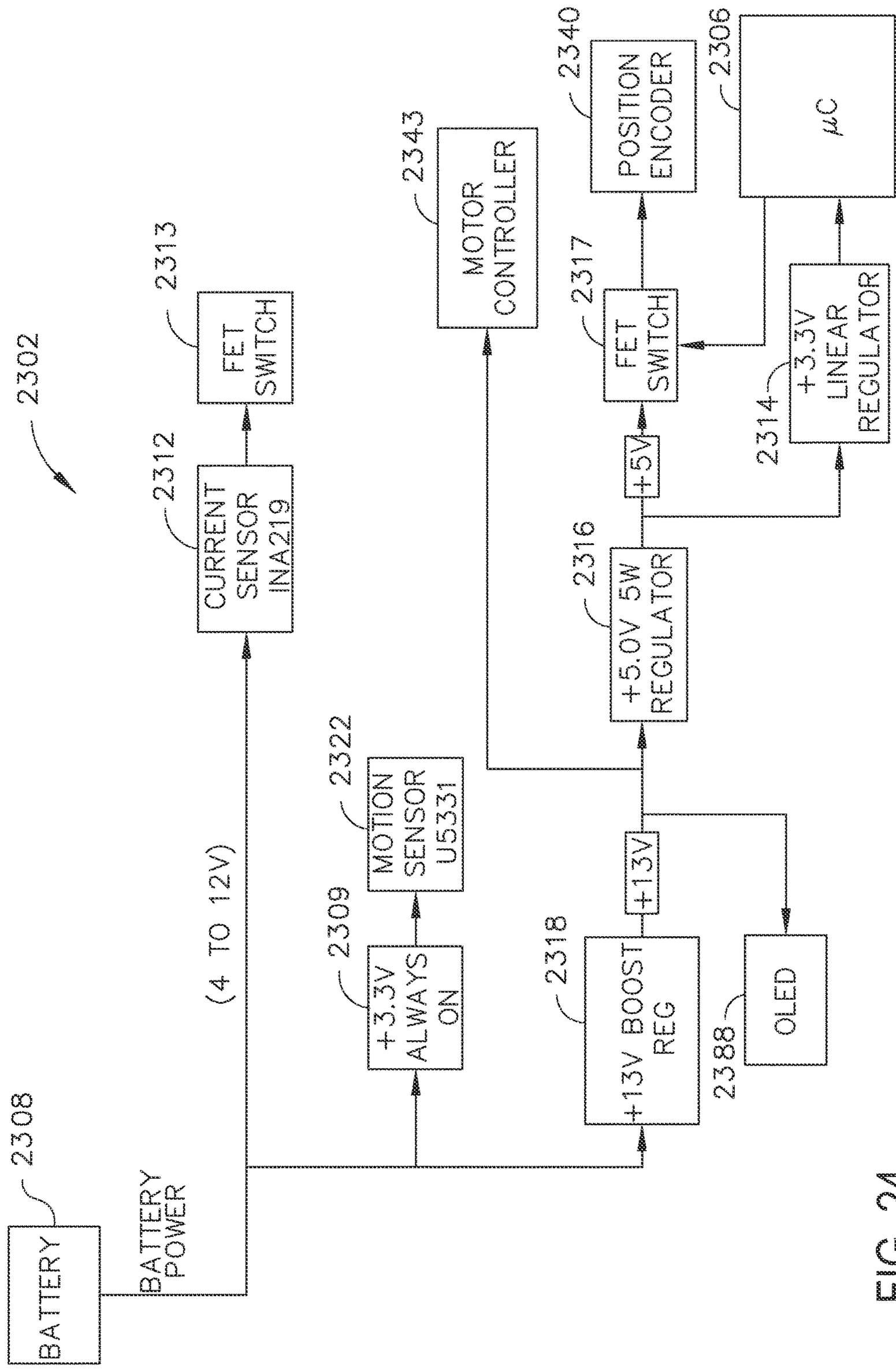
2302
BATTERY
2308
BATTERY POWER
(4 TO 12V)
CURRENT SENSOR INA219
2312
FET SWITCH
2313
+3.3V ALWAYS ON
2309
MOTION SENSOR U5331
2322
MOTOR CONTROLLER
2343
+13V BOOST REG
2318
+13V
+5.0V 5W REGULATOR
2316
+5V
FET SWITCH
2317
POSITION ENCODER
2340
OLED
2388
+3.3V LINEAR REGULATOR
2314
μC
2306

FIG. 24

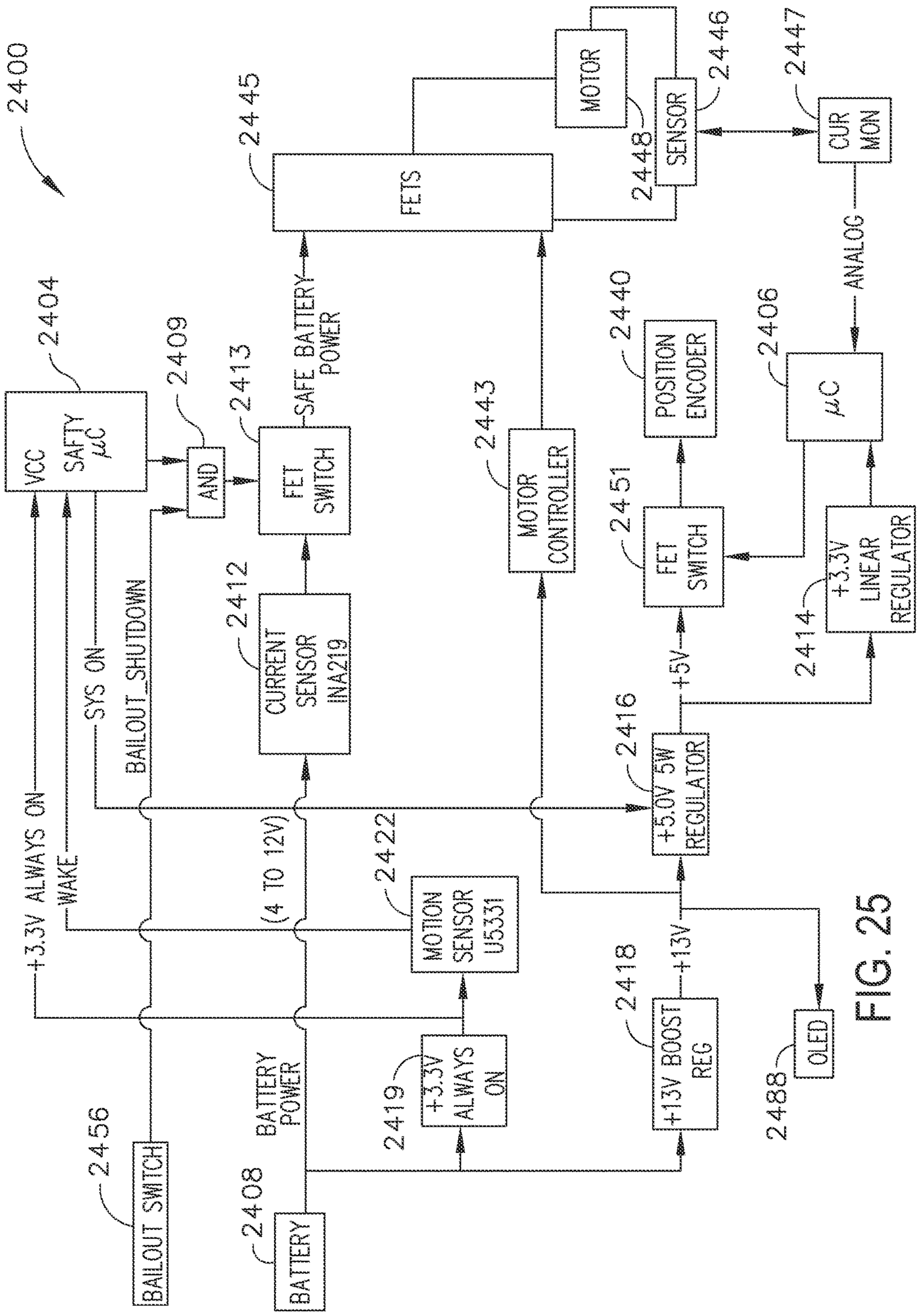
2400
2445
FETS
MOTOR
2448
SENSOR
2446
2447
CUR MON
ANALOG
2404
VCC
SAFTY μC
2409
AND
2413
FET SWITCH
SAFE BATTERY POWER
2443
MOTOR CONTROLLER
2440
POSITION ENCODER
2406
μC
2451
FET SWITCH
2414
+3.3V LINEAR REGULATOR
2412
CURRENT SENSOR INA219
BAILOUT_SHUTDOWN
SYS ON
+5V
2416
+5.0V 5W REGULATOR
+3.3V ALWAYS ON
WAKE
(4 TO 12V)
2422
MOTION SENSOR U5331
+13V
2418
+13V BOOST REG
2488
OLED
2419
+3.3V ALWAYS ON
BATTERY POWER
2456
BAILOUT SWITCH
2408
BATTERY

FIG. 25

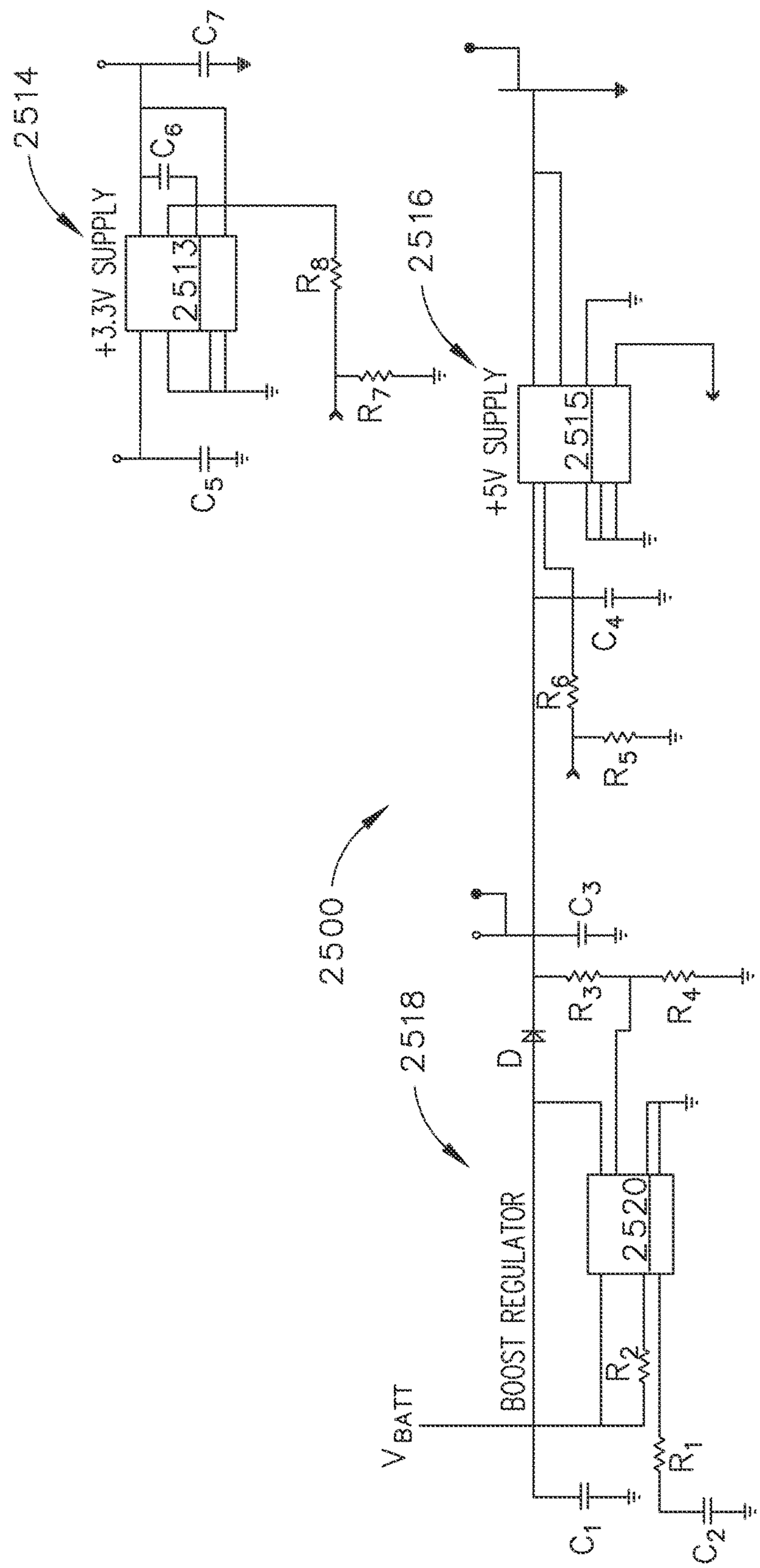
2514
+3.3V SUPPLY
2513
C_5
C_6
C_7
R_7
R_8
2516
+5V SUPPLY
2515
C_4
R_5
R_6
2500
C_3
R_3
R_4
2518
D_N
BOOST REGULATOR
2520
V_{BATT}
C_1
C_2
R_1
R_2

FIG. 26

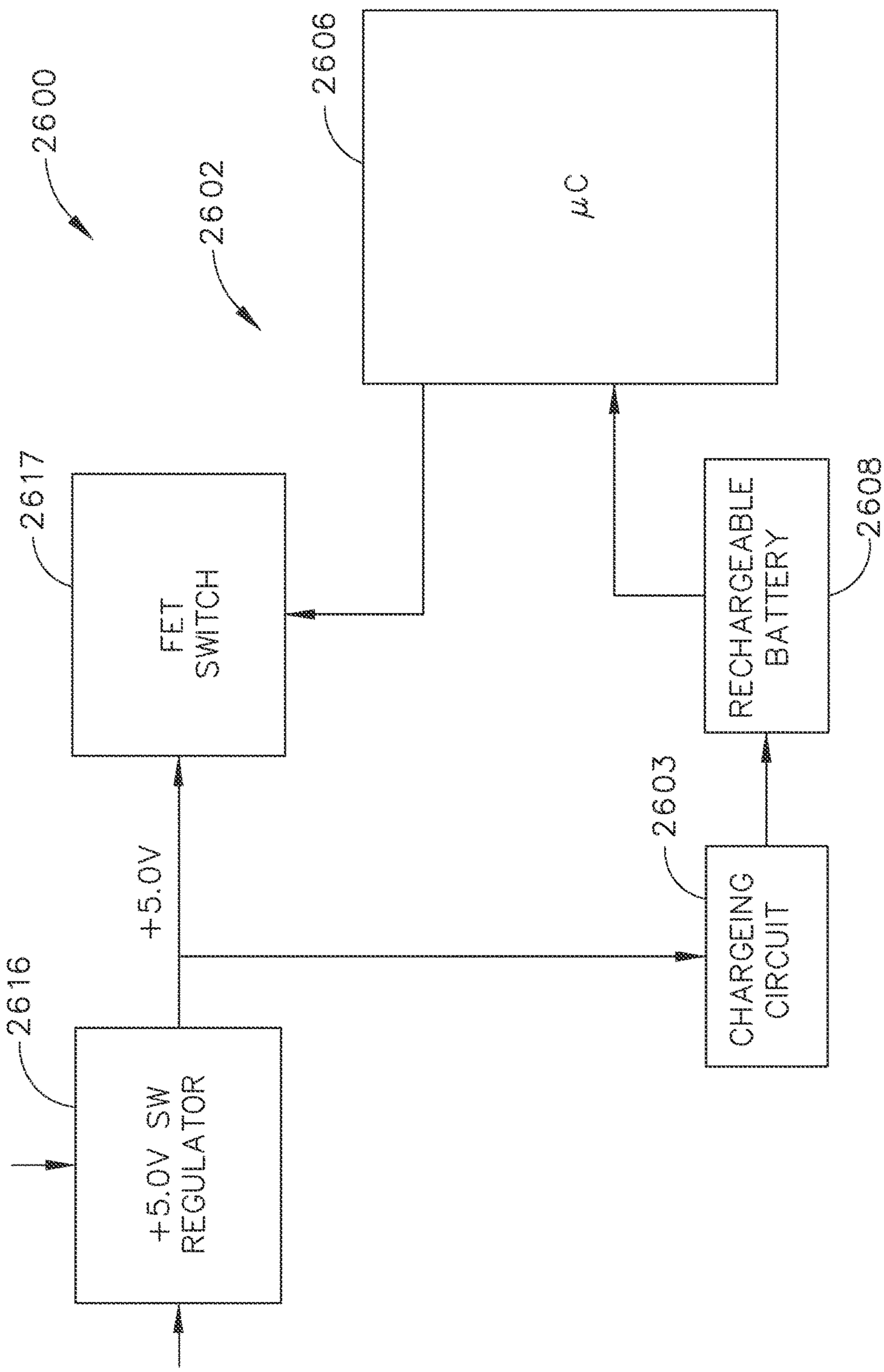
2600
2602
2606
μC
2617
FET SWITCH
RECHARGEABLE BATTERY
2608
2603
CHARGEING CIRCUIT
+5.0V
2616
+5.0V SW REGULATOR

FIG. 27

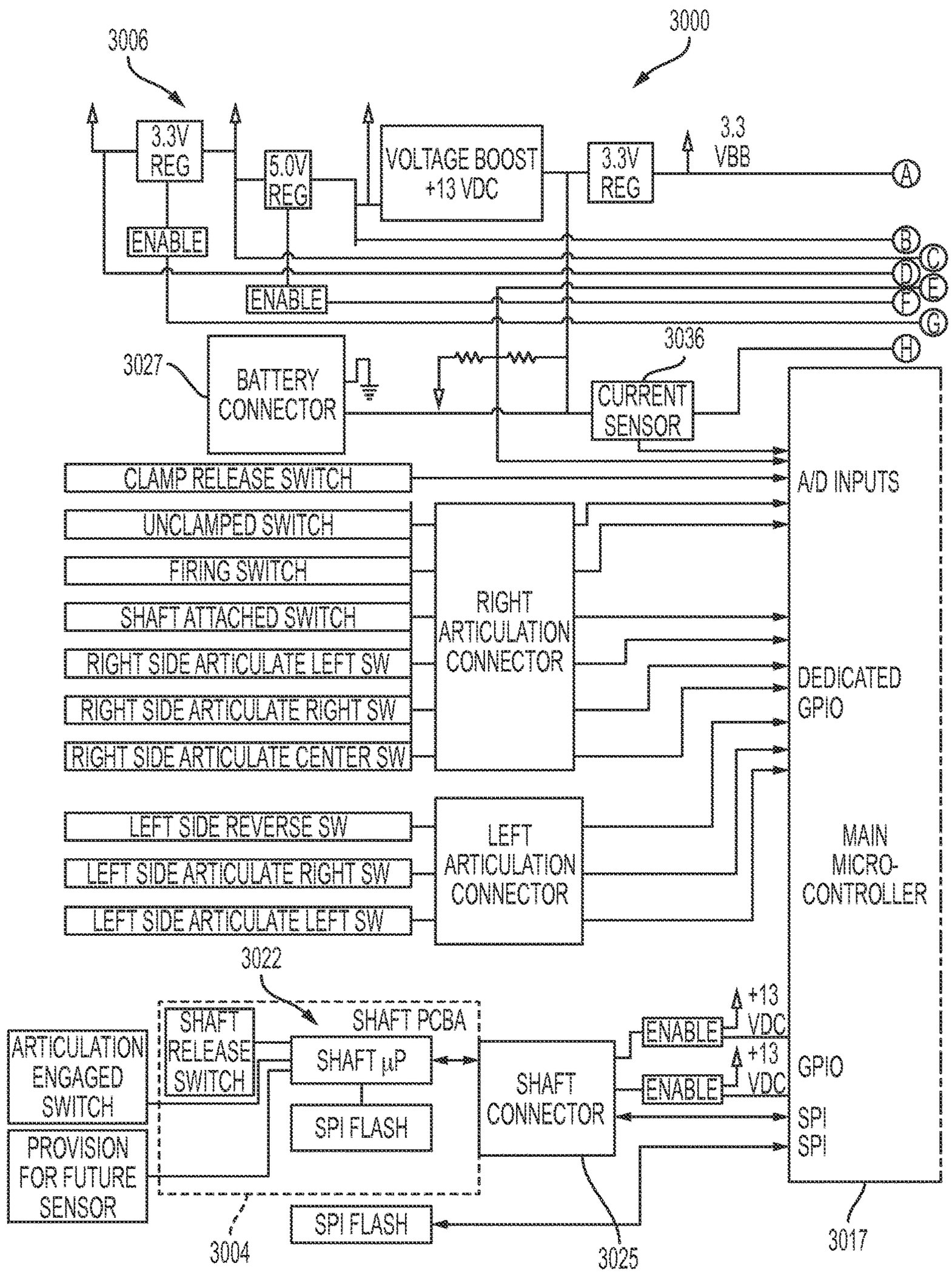
3006
3000
3.3V REG
5.0V REG
VOLTAGE BOOST +13 VDC
3.3V REG
3.3 VBB
A
B
C
D
E
F
G
H
ENABLE
ENABLE
3027
BATTERY CONNECTOR
3036
CURRENT SENSOR
CLAMP RELEASE SWITCH
UNCLAMPED SWITCH
FIRING SWITCH
SHAFT ATTACHED SWITCH
RIGHT SIDE ARTICULATE LEFT SW
RIGHT SIDE ARTICULATE RIGHT SW
RIGHT SIDE ARTICULATE CENTER SW
RIGHT ARTICULATION CONNECTOR
A/D INPUTS
DEDICATED GPIO
LEFT SIDE REVERSE SW
LEFT SIDE ARTICULATE RIGHT SW
LEFT SIDE ARTICULATE LEFT SW
LEFT ARTICULATION CONNECTOR
MAIN MICRO-CONTROLLER
3022
SHAFT PCBA
ARTICULATION ENGAGED SWITCH
SHAFT RELEASE SWITCH
SHAFT µP
SPI FLASH
PROVISION FOR FUTURE SENSOR
SHAFT CONNECTOR
ENABLE
ENABLE
+13 VDC
+13 VDC
GPIO
SPI
SPI
SPI FLASH
3004
3025
3017

FIG. 28A

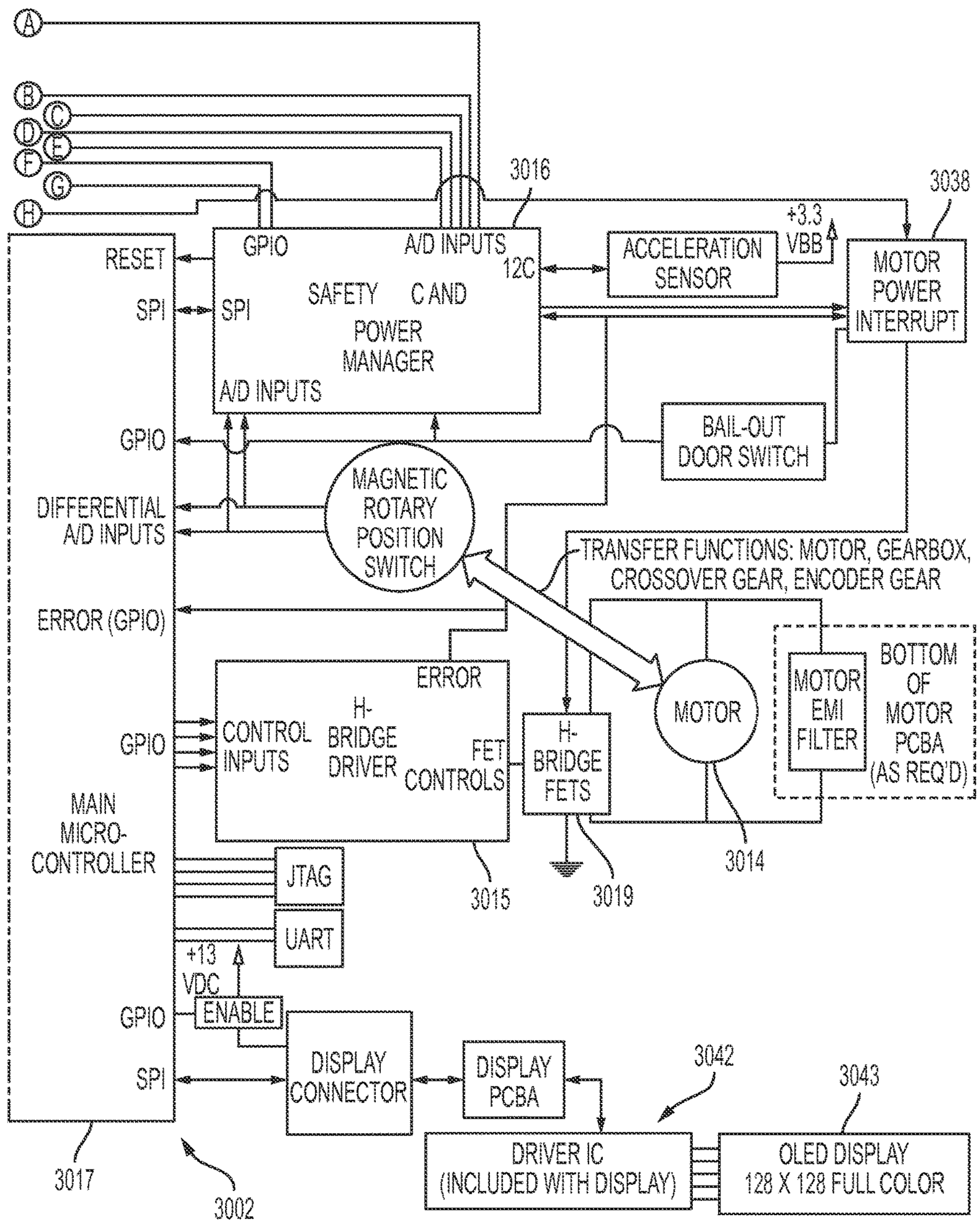
A
B
C
D
E
F
G
H
3016
3038
+3.3
VBB
RESET
GPIO
A/D INPUTS
12C
ACCELERATION SENSOR
MOTOR POWER INTERRUPT
SPI
SPI
SAFETY C AND POWER MANAGER
A/D INPUTS
GPIO
BAIL-OUT DOOR SWITCH
DIFFERENTIAL A/D INPUTS
MAGNETIC ROTARY POSITION SWITCH
TRANSFER FUNCTIONS: MOTOR, GEARBOX, CROSSOVER GEAR, ENCODER GEAR
ERROR (GPIO)
ERROR
GPIO
CONTROL INPUTS
H-BRIDGE DRIVER
FET CONTROLS
H-BRIDGE FETS
MOTOR
MOTOR EMI FILTER
BOTTOM OF MOTOR PCBA (AS REQ'D)
MAIN MICRO-CONTROLLER
JTAG
UART
3015
3019
3014
+13 VDC
GPIO
ENABLE
SPI
DISPLAY CONNECTOR
DISPLAY PCBA
3042
3043
DRIVER IC (INCLUDED WITH DISPLAY)
OLED DISPLAY 128 X 128 FULL COLOR
3017
3002

FIG. 28B

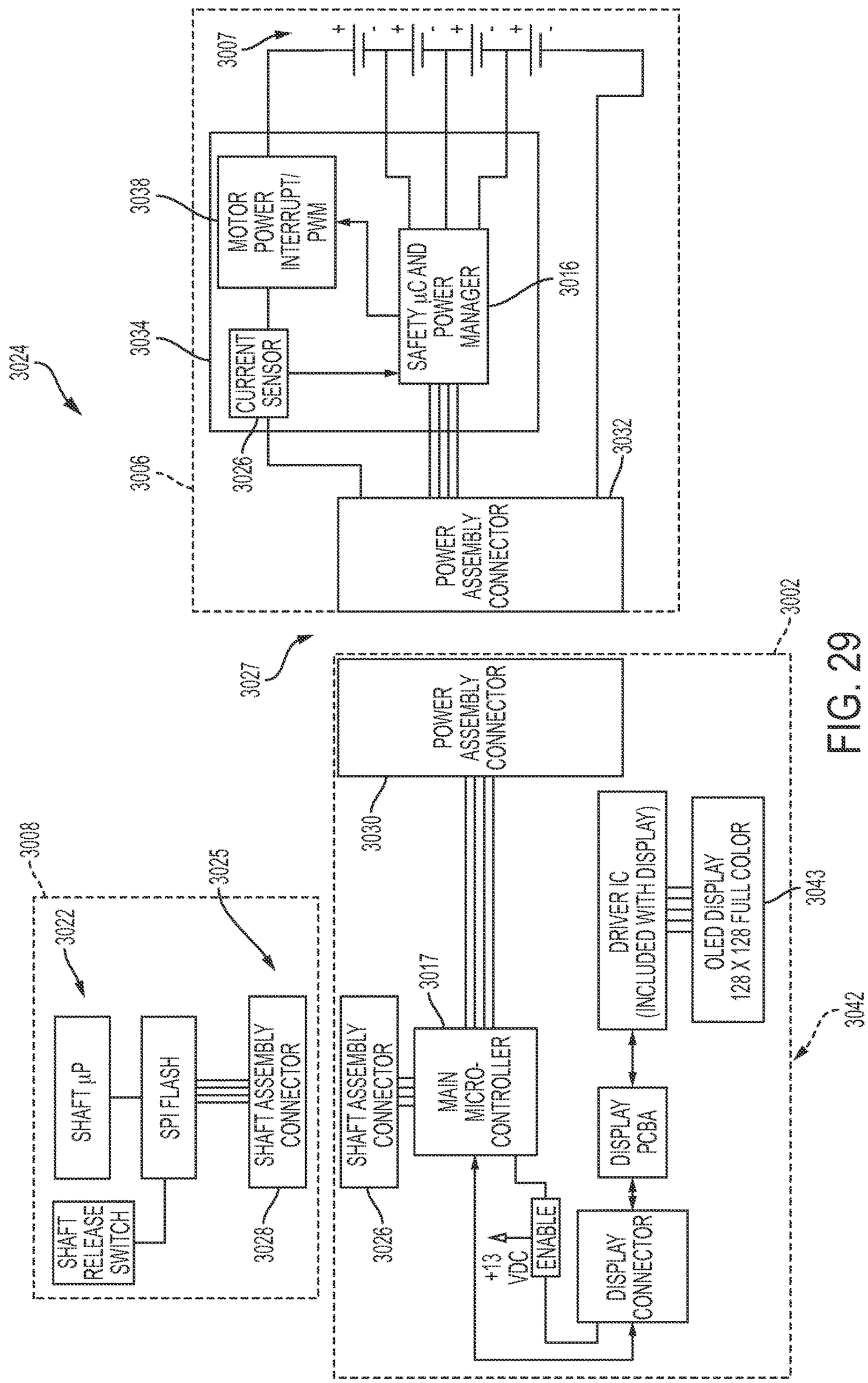
3024
3006
3034
3038
3007
MOTOR POWER INTERRUPT/ PWM
CURRENT SENSOR
SAFETY µC AND POWER MANAGER
3016
3026
3032
POWER ASSEMBLY CONNECTOR
3027
3002
POWER ASSEMBLY CONNECTOR
3030
3008
3025
3022
SHAFT µP
SPI FLASH
SHAFT ASSEMBLY CONNECTOR
SHAFT RELEASE SWITCH
3028
SHAFT ASSEMBLY CONNECTOR
3026
3017
MAIN MICRO-CONTROLLER
+13 VDC
ENABLE
DISPLAY CONNECTOR
DISPLAY PCBA
DRIVER IC (INCLUDED WITH DISPLAY)
OLED DISPLAY 128 X 128 FULL COLOR
3043
3042

FIG. 29

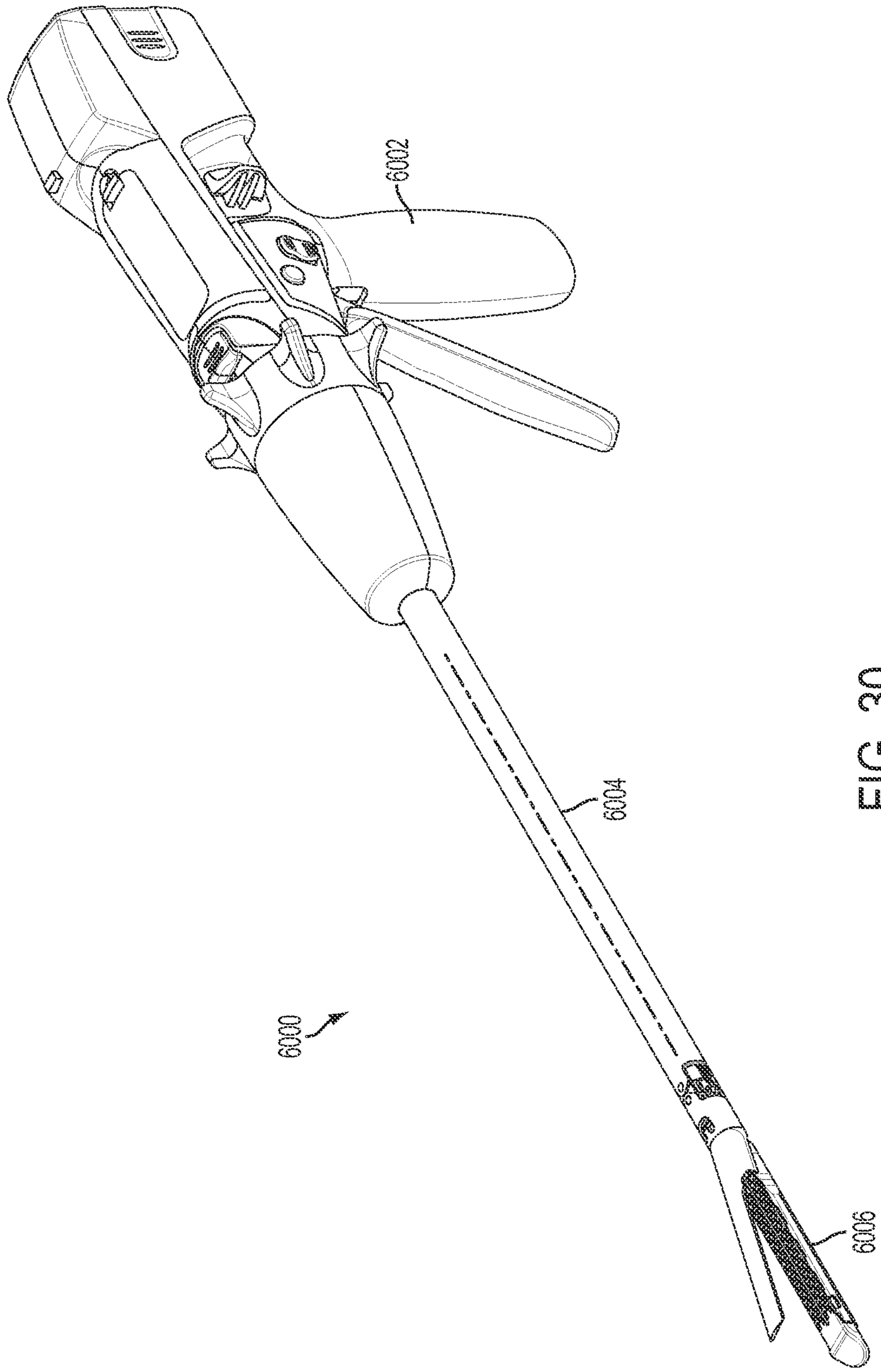

FIG. 30

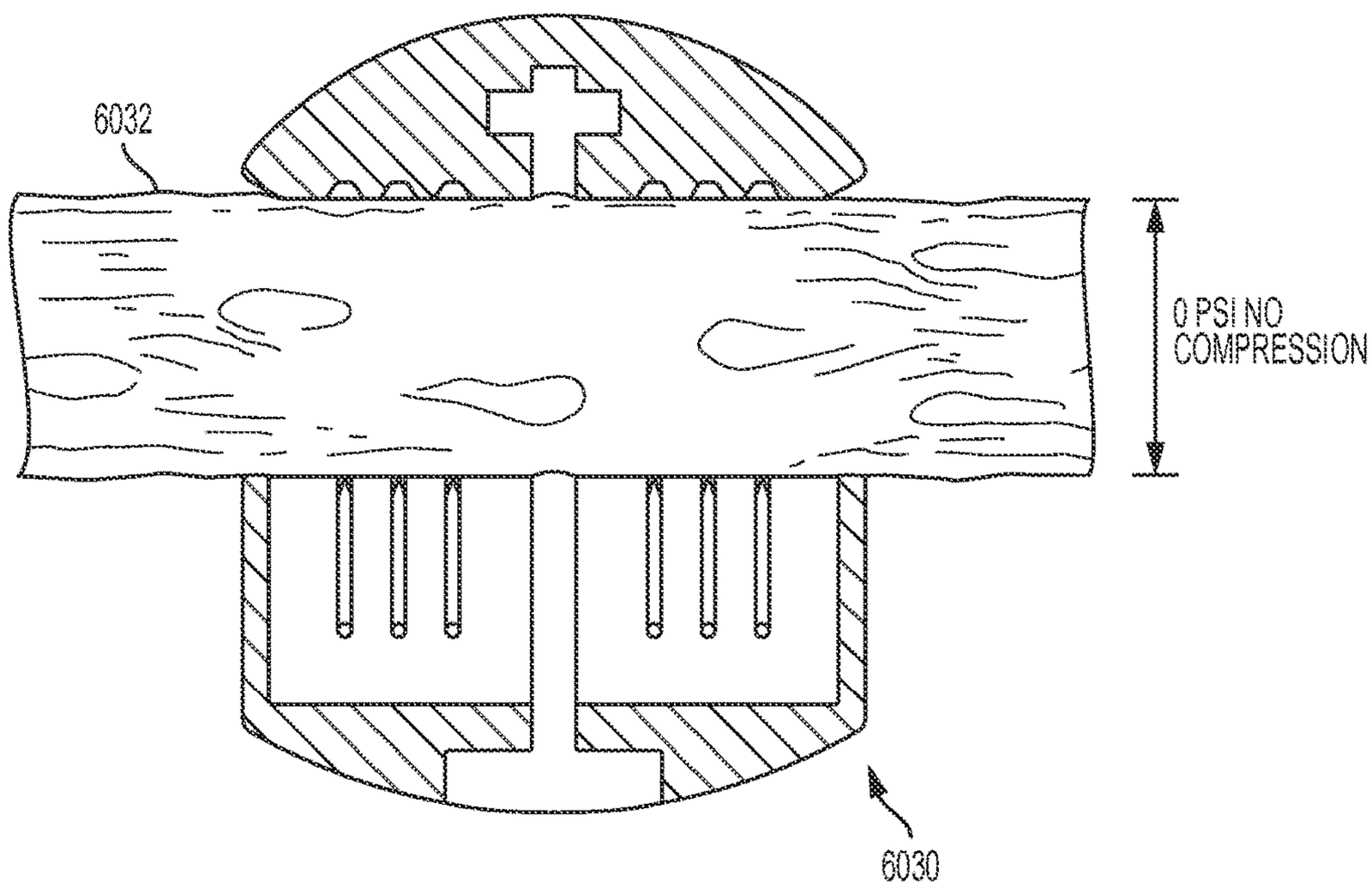

FIG. 31A

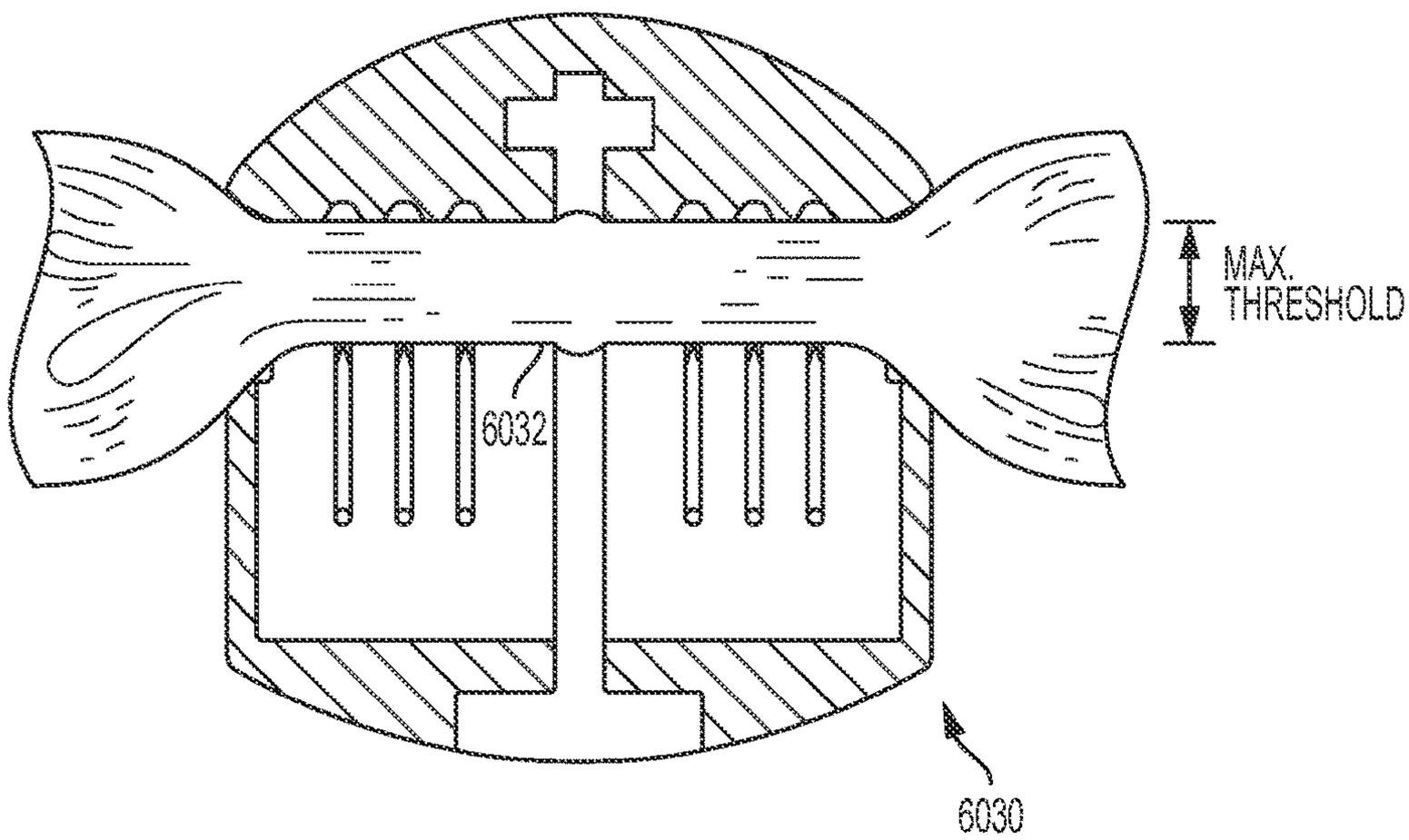

FIG. 31B

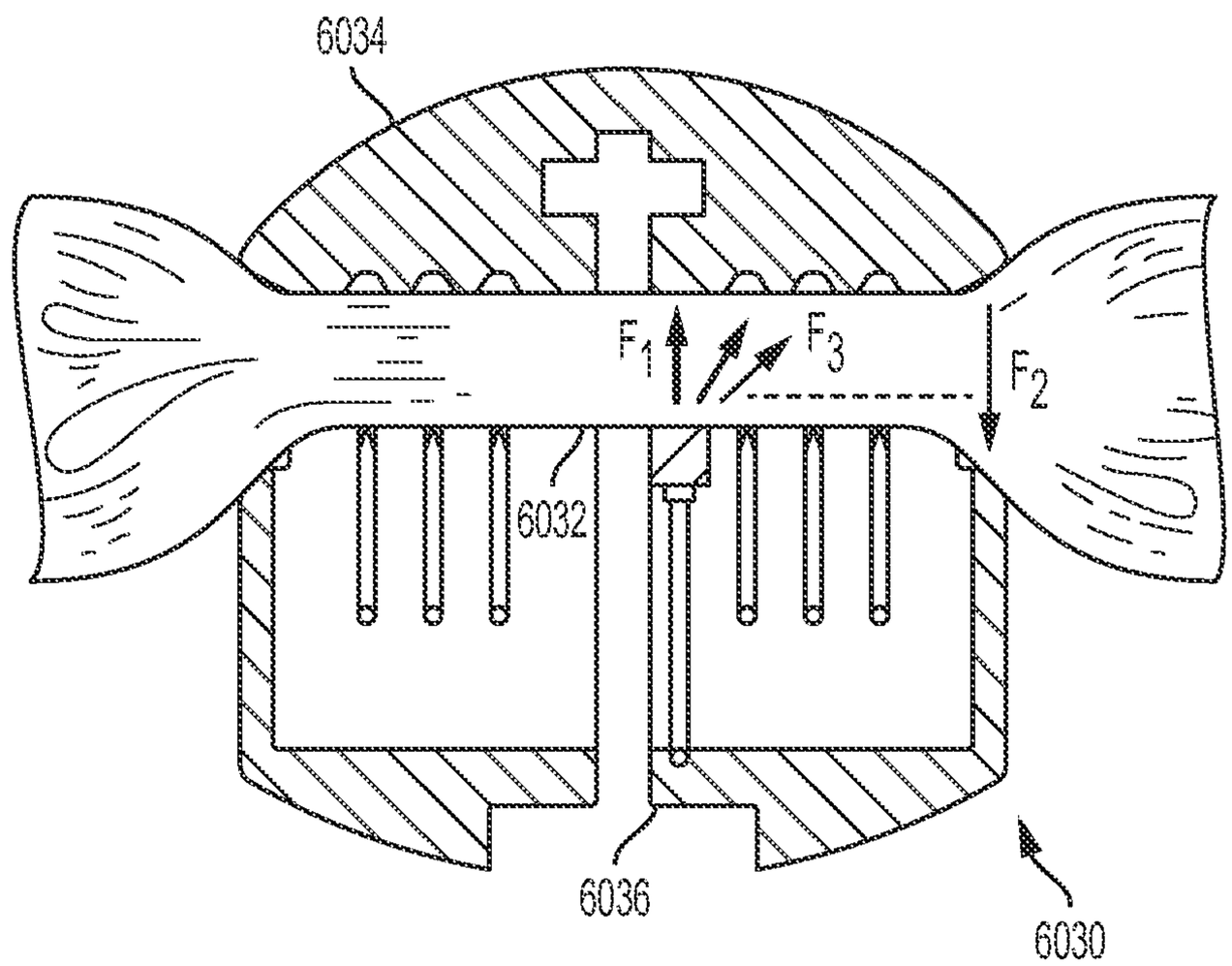

FIG. 32A

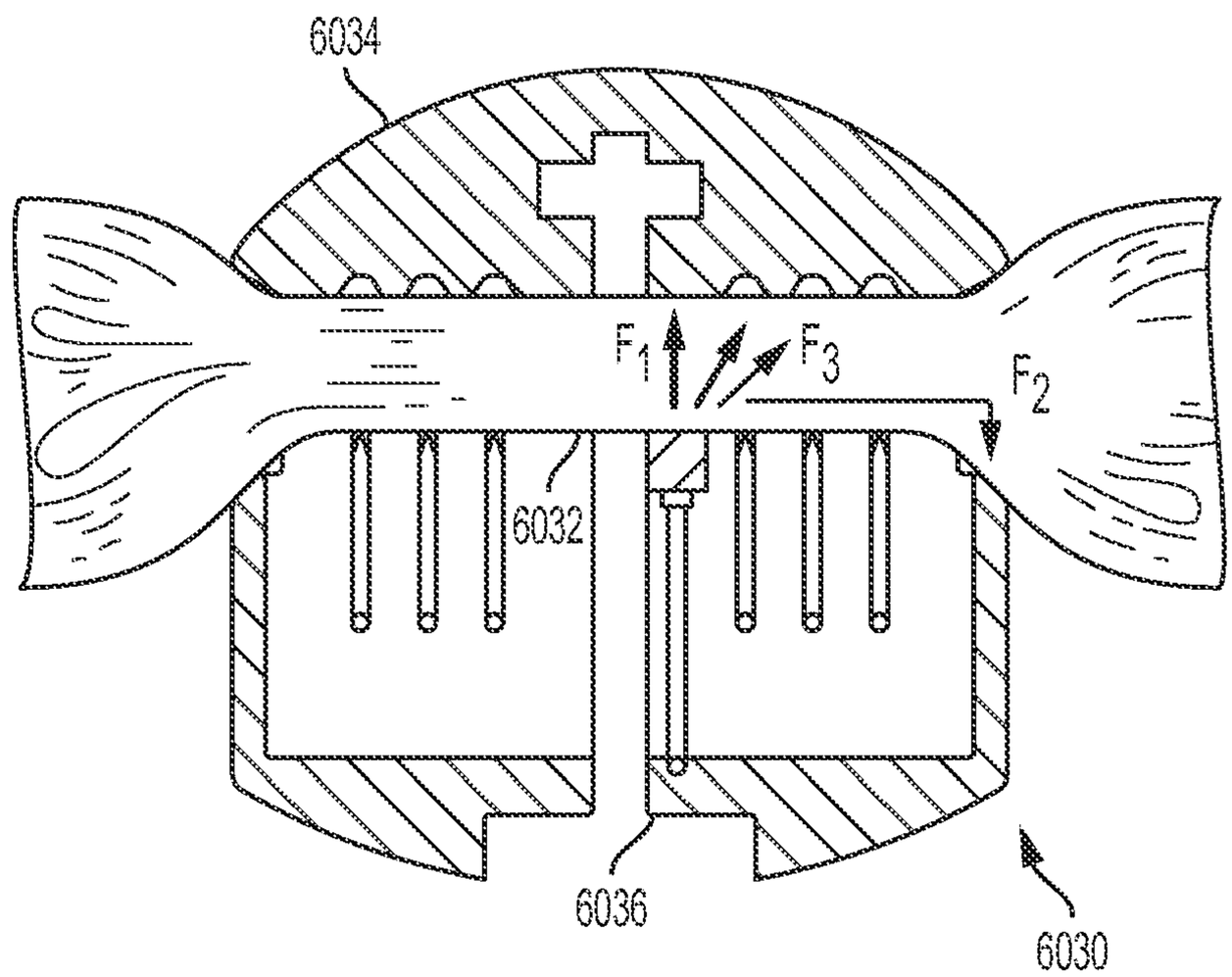

FIG. 32B

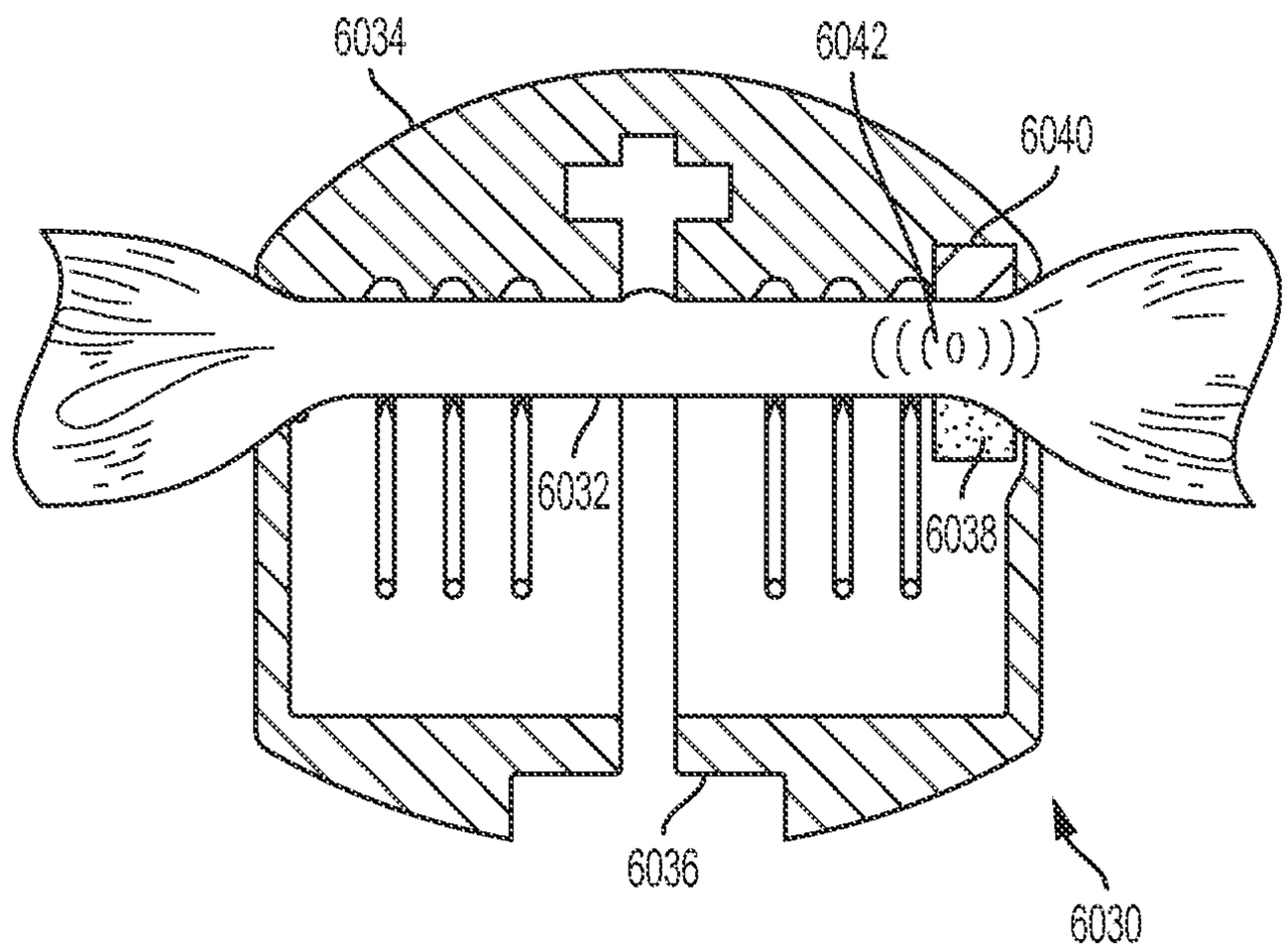

FIG. 33

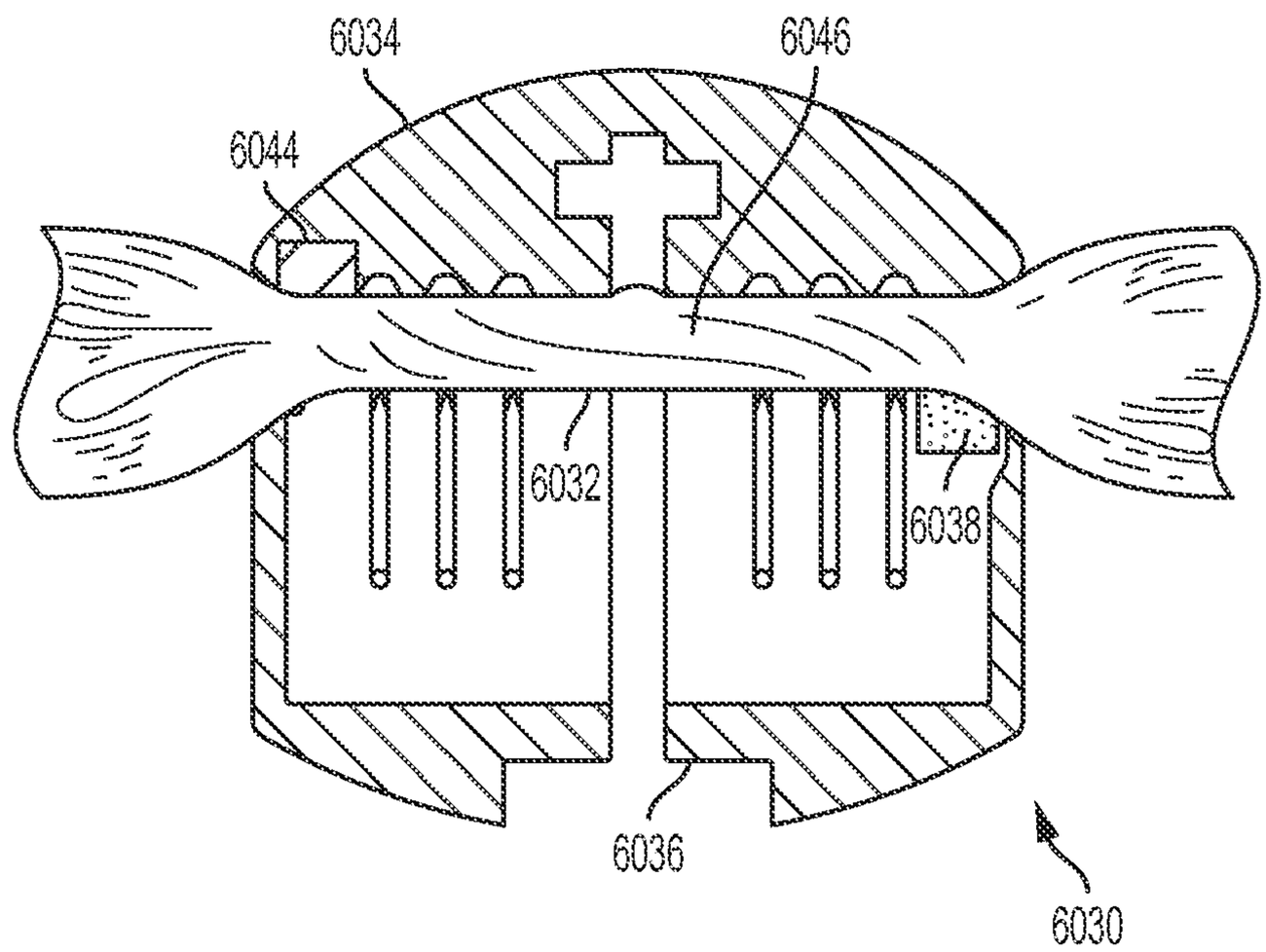

FIG. 34

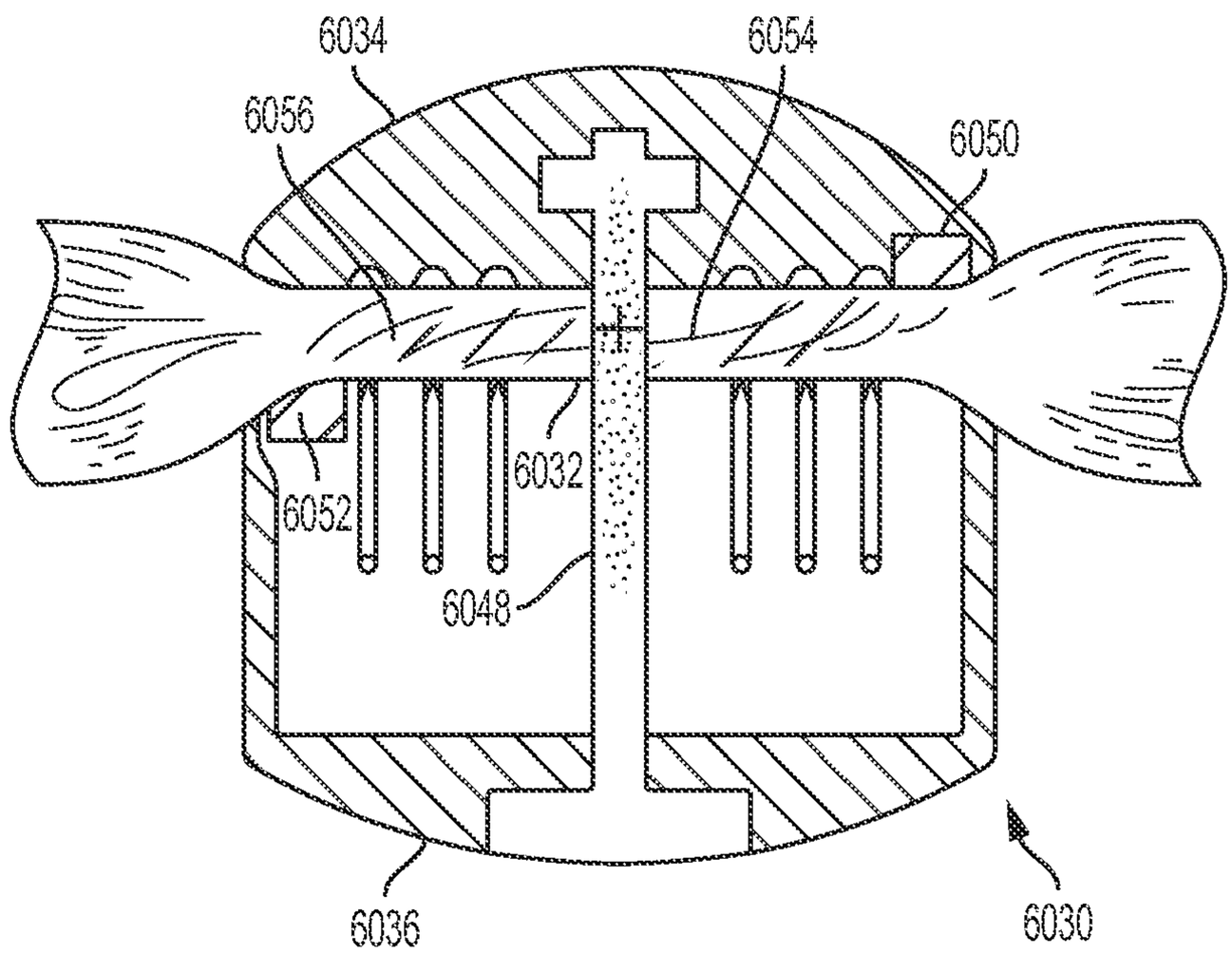

FIG. 35

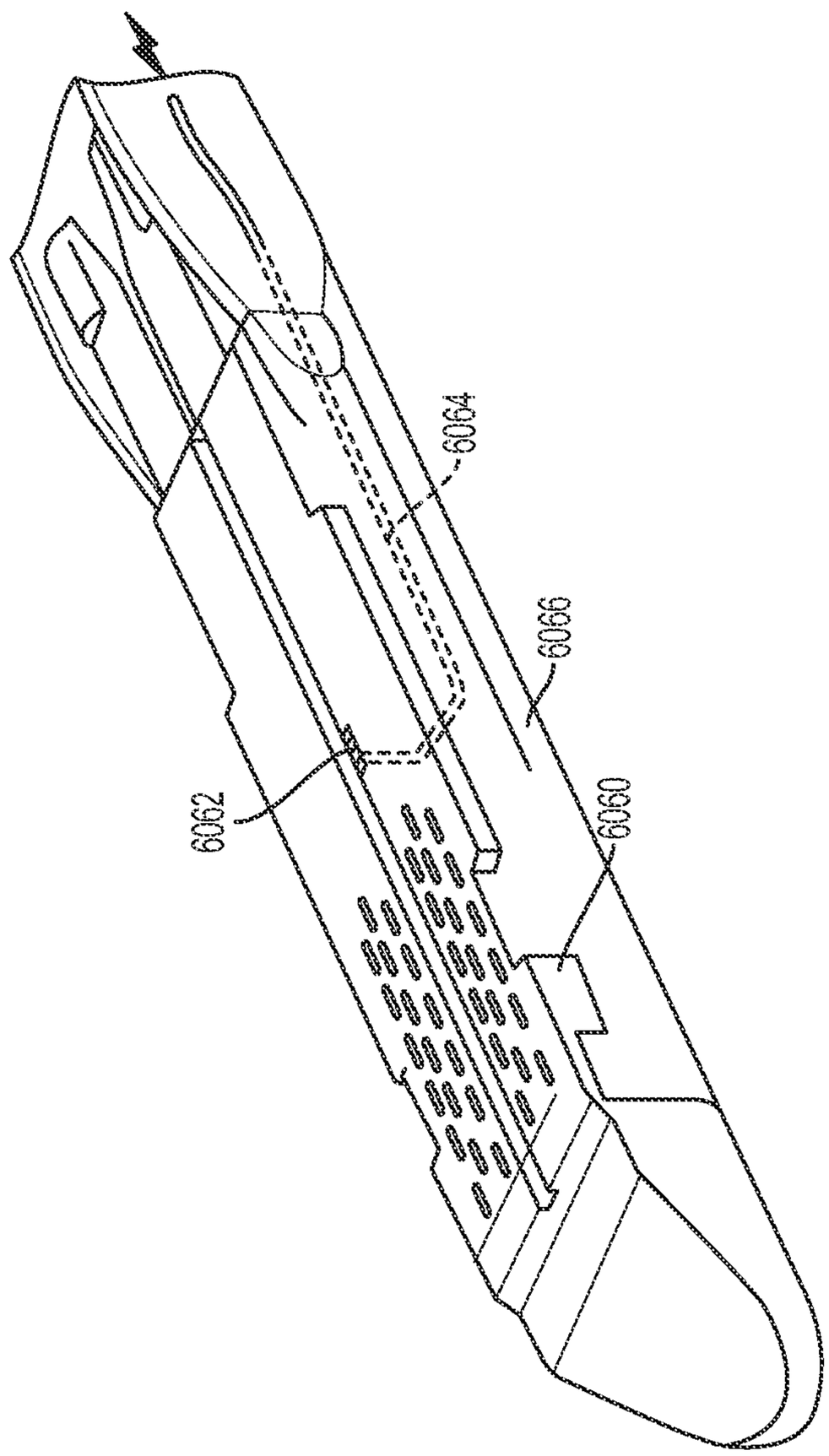

FIG. 36

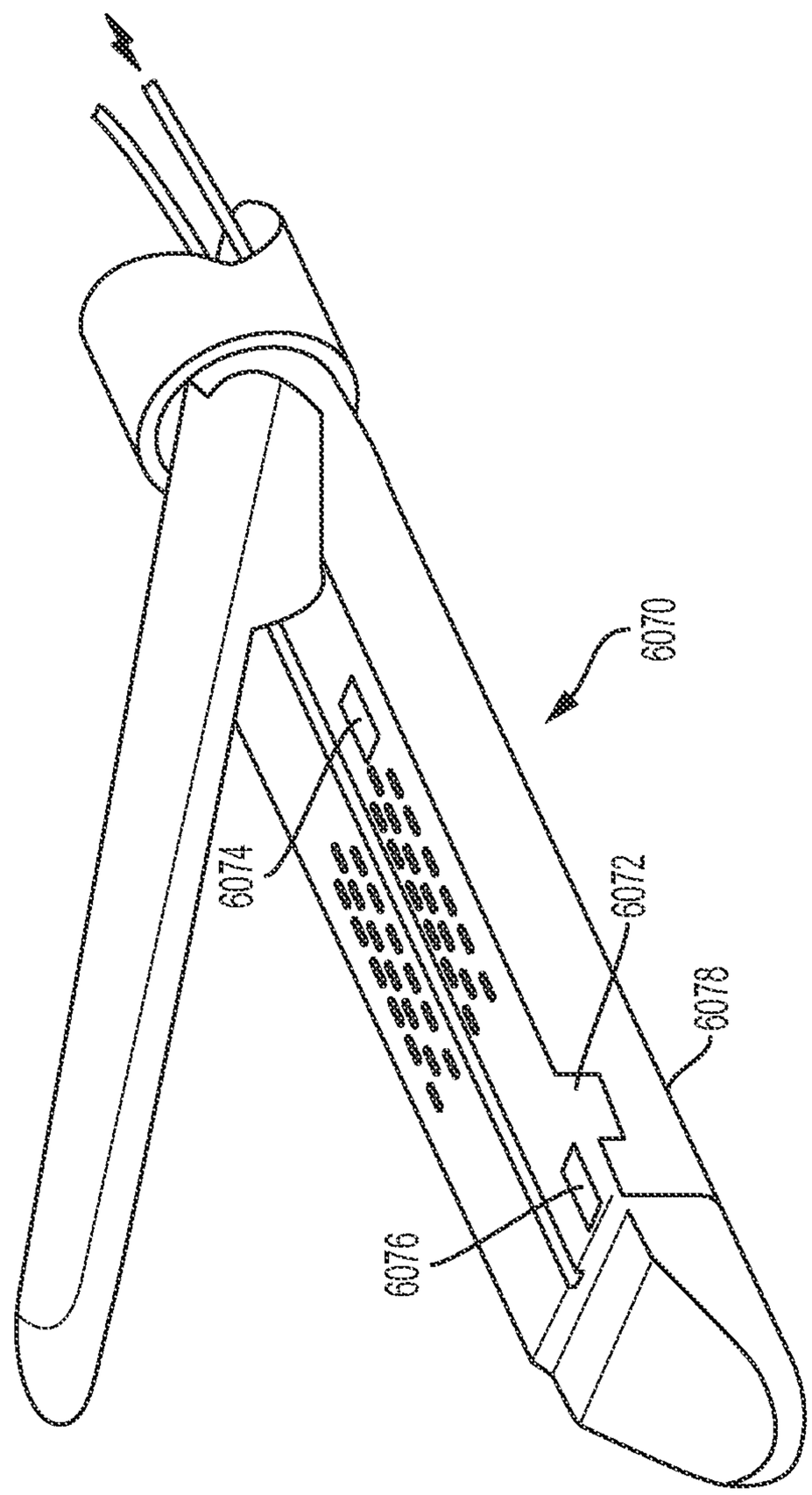

FIG. 37

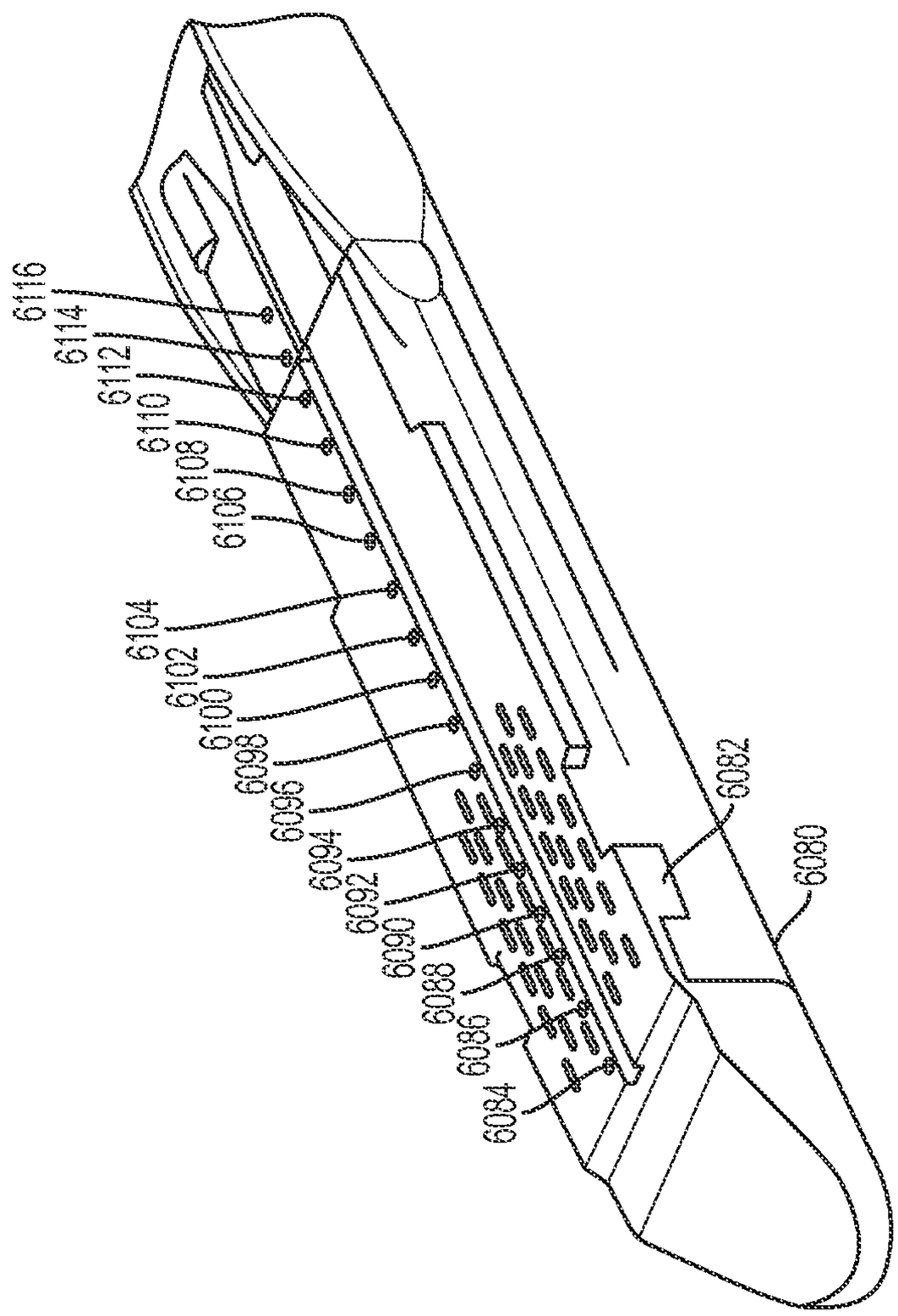
6116
6114
6112
6110
6108
6106
6104
6102
6100
6098
6096
6094
6092
6090
6088
6086
6084
6082
6080

FIG. 38

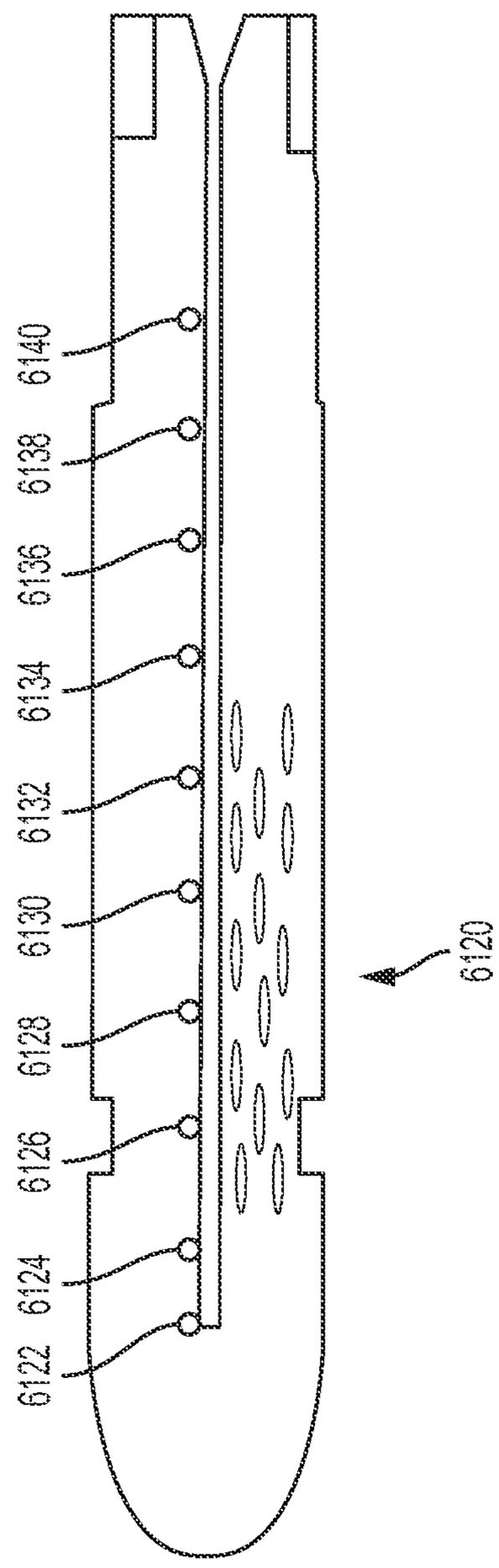

FIG. 39

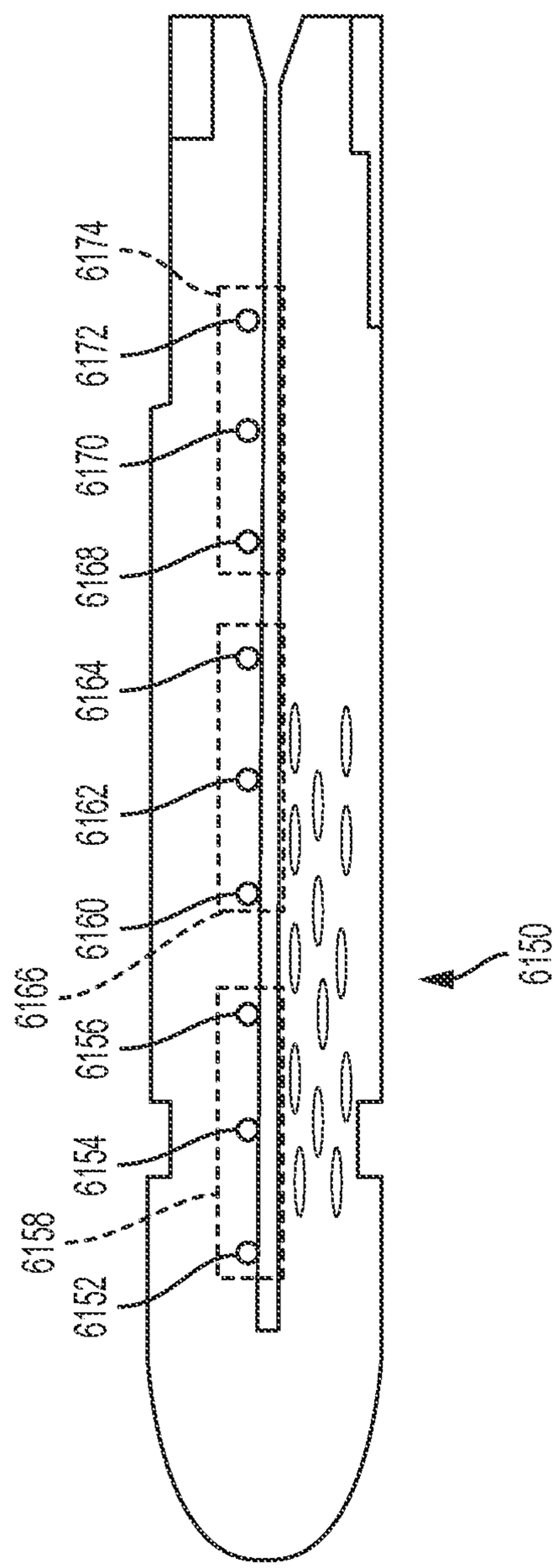
6174
6172
6170
6168
6164
6162
6160
6166
6156
6154
6158
6152
6150

FIG. 40

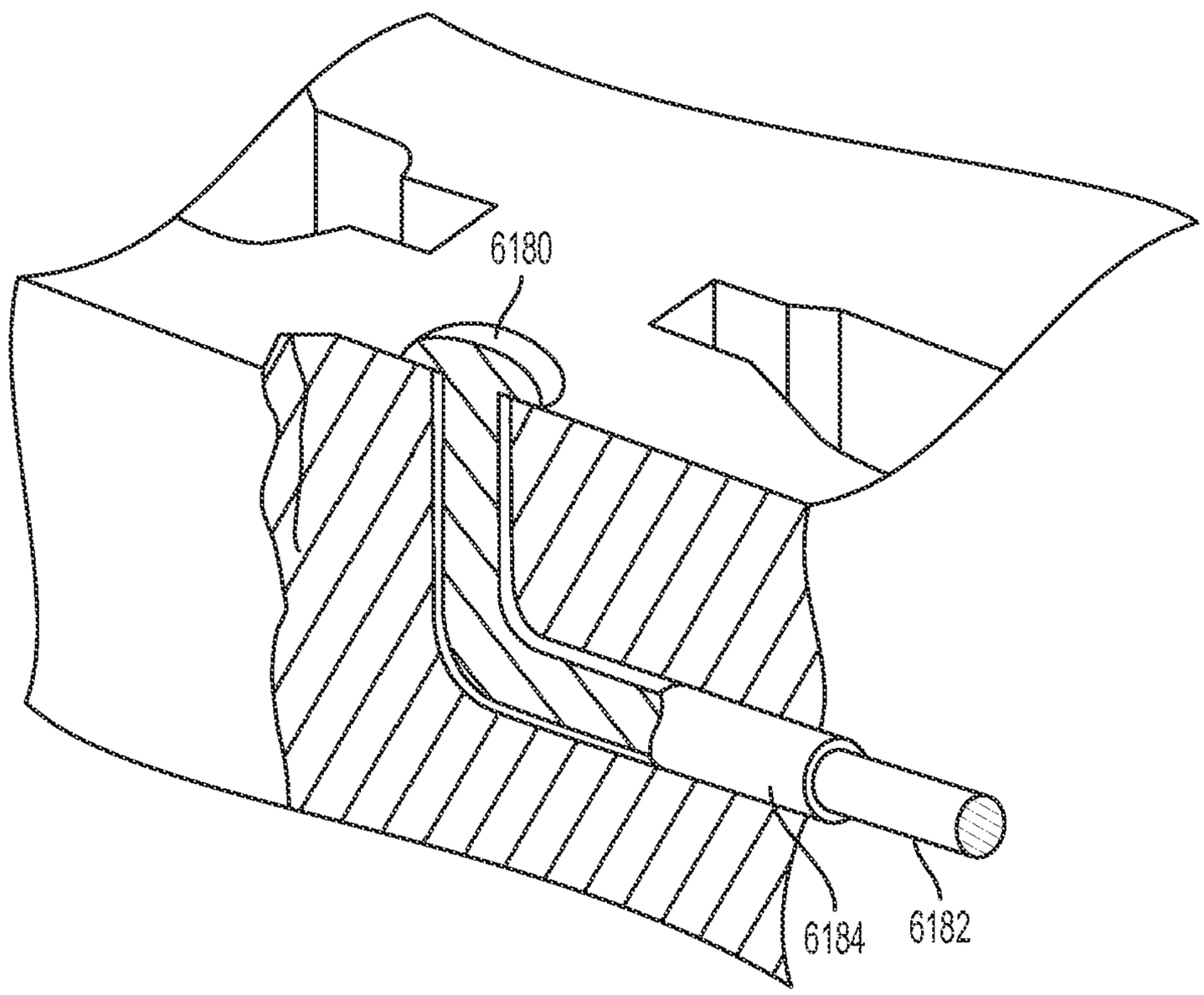

FIG. 41

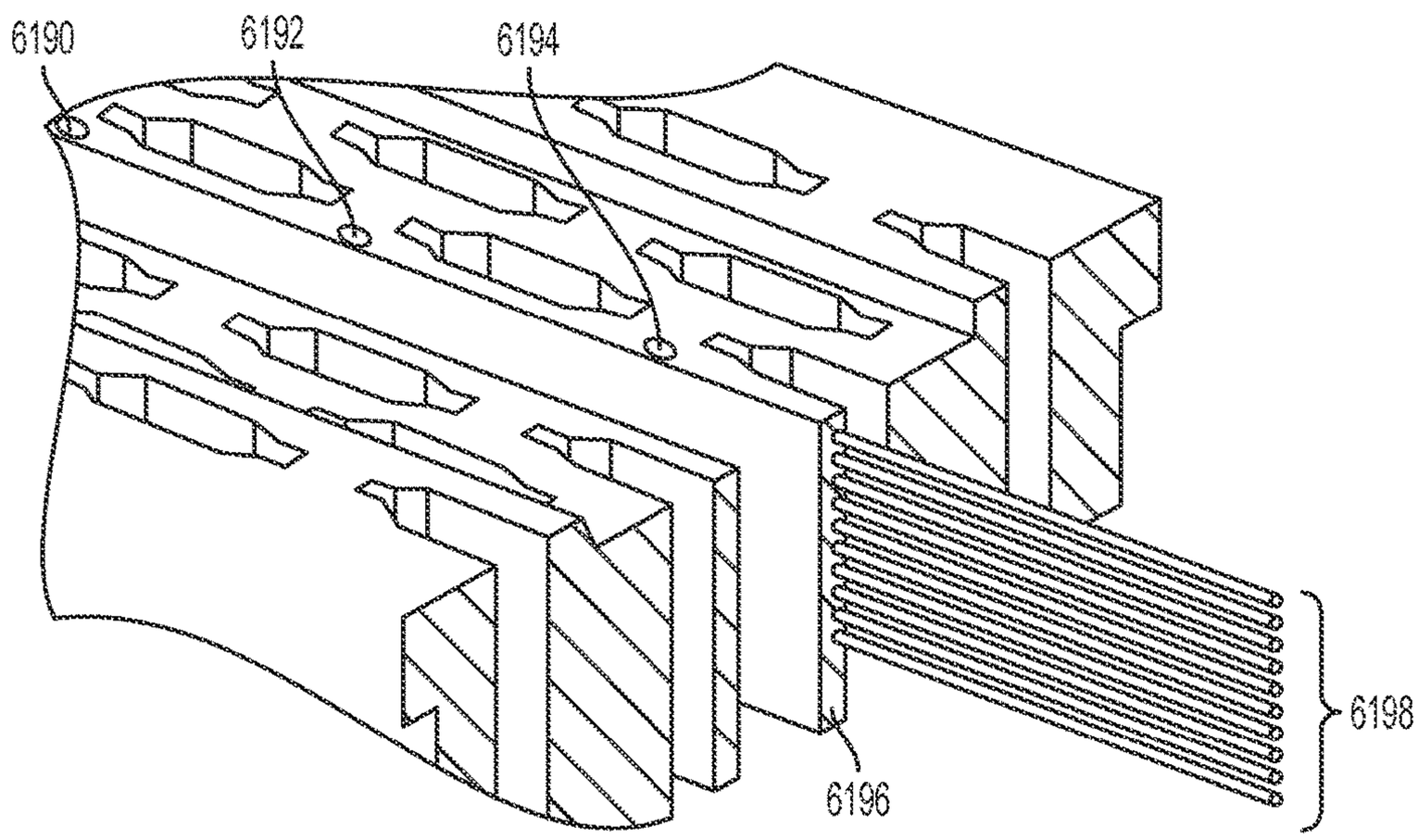

FIG. 42

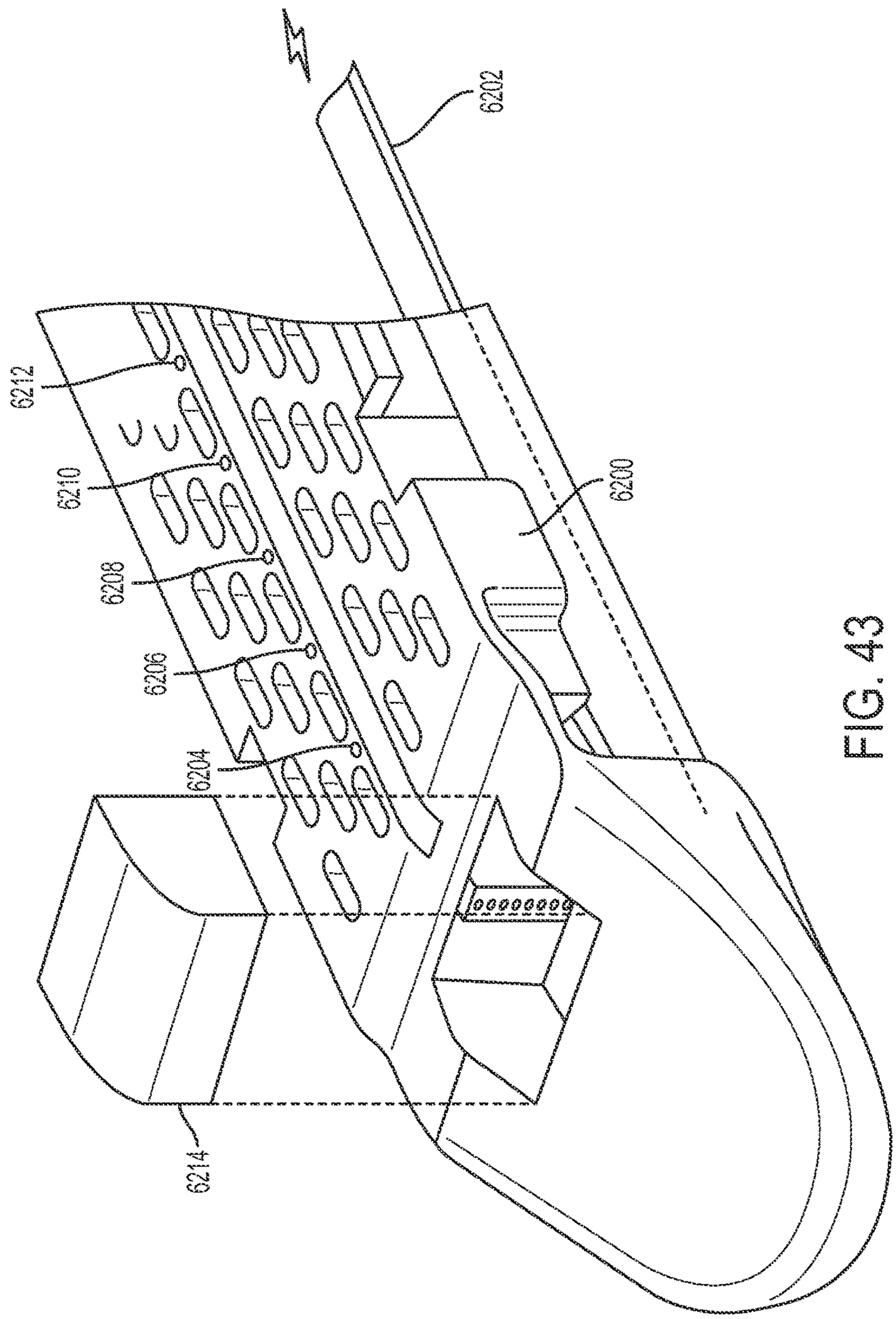

FIG. 43

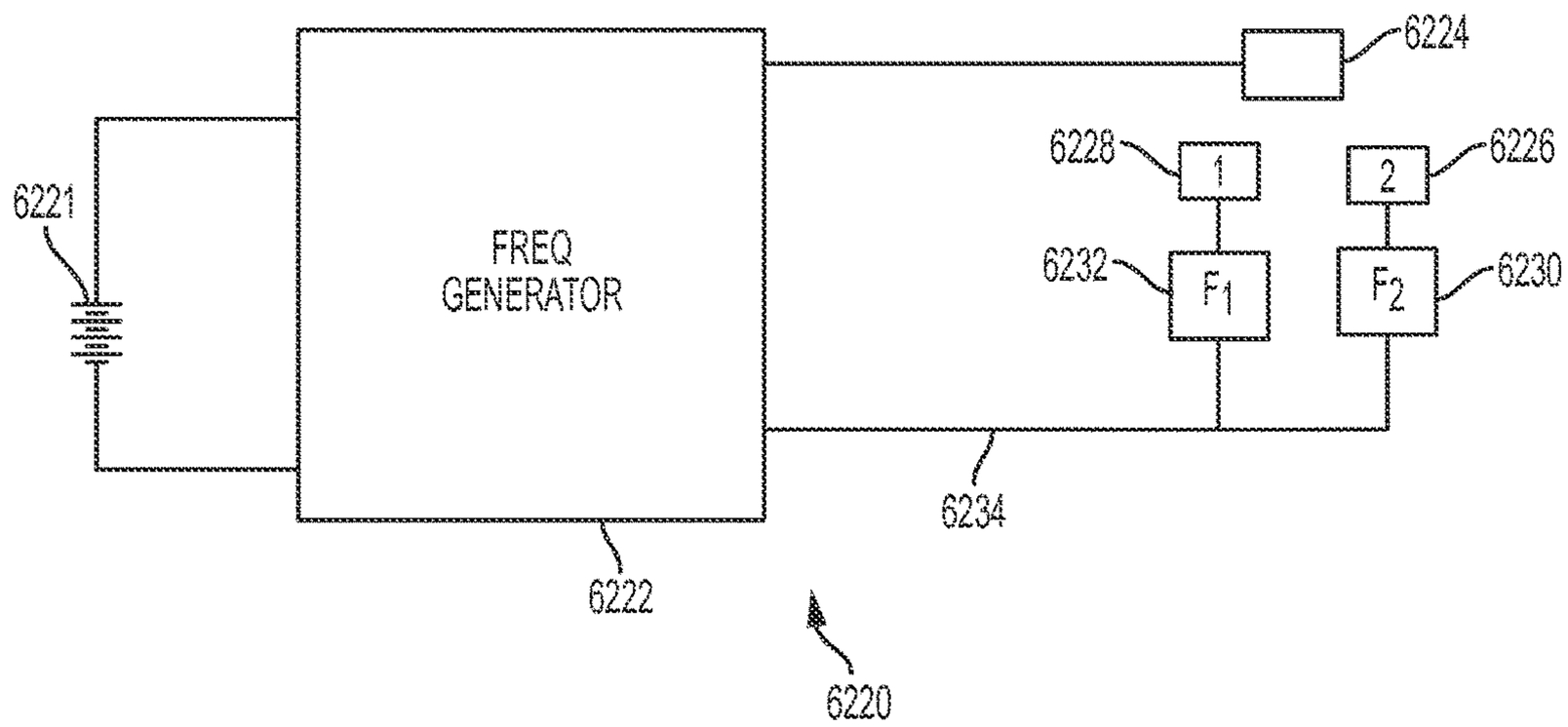
6224
6228
1
2
6226
6221
FREQ
GENERATOR
6232
F1
F2
6230
6234
6222
6220

FIG. 44

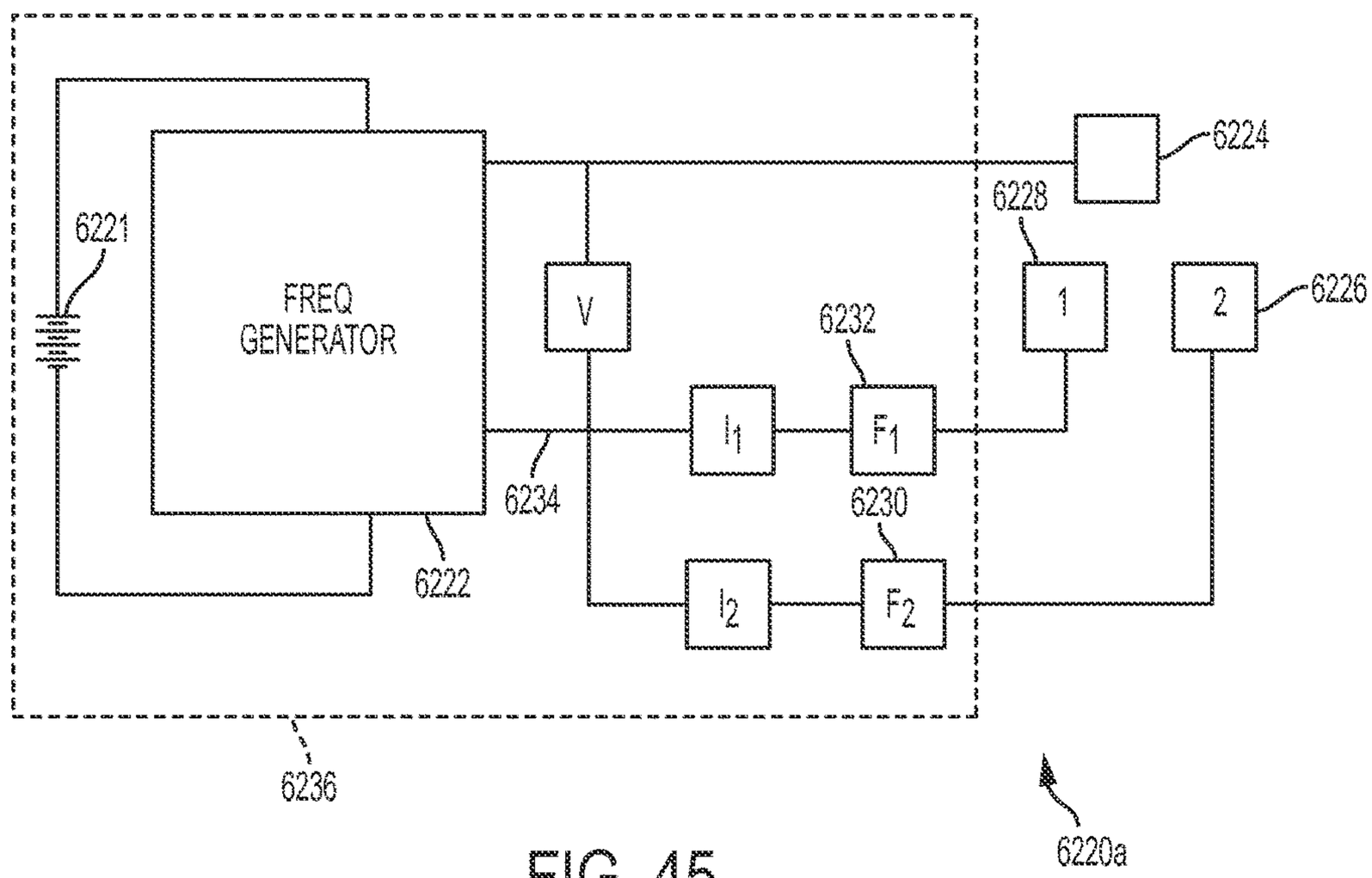
6221
FREQ
GENERATOR
6222
V
6234
I1
I2
6232
F1
6230
F2
6228
1
2
6224
6226
6236
6220a

FIG. 45

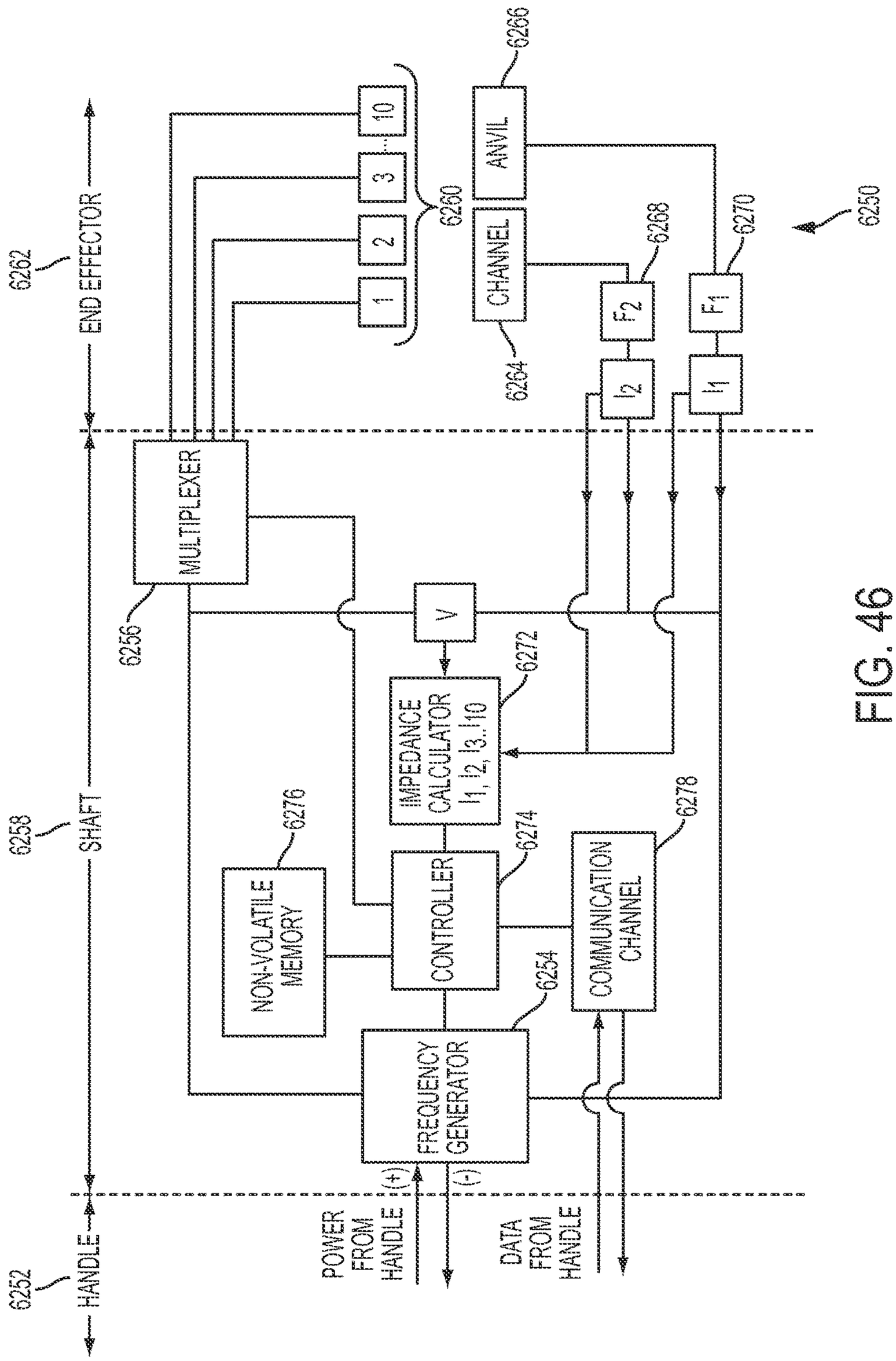
6250
6252
HANDLE
6258
SHAFT
6262
END EFFECTOR
MULTIPLEXER
6256
1
2
3
10
6260
CHANNEL
6264
ANVIL
6266
I_2
F_2
6268
I_1
F_1
6270
V
IMPEDANCE CALCULATOR $I_1, I_2, I_3..I_{10}$
6272
NON-VOLATILE MEMORY
6276
CONTROLLER
6274
COMMUNICATION CHANNEL
6278
FREQUENCY GENERATOR
6254
(+)
(-)
POWER FROM HANDLE
DATA FROM HANDLE

FIG. 46

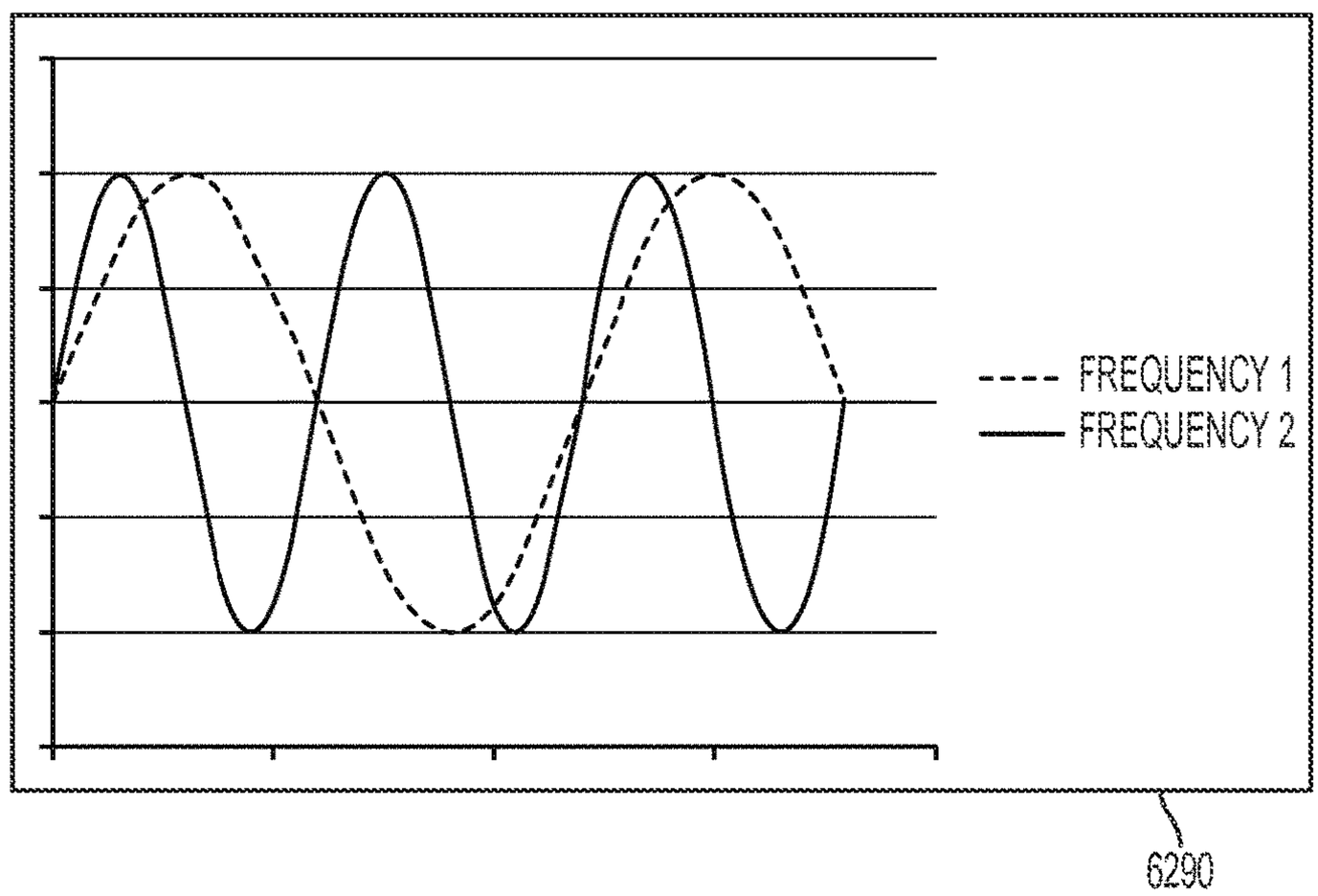

FIG. 47

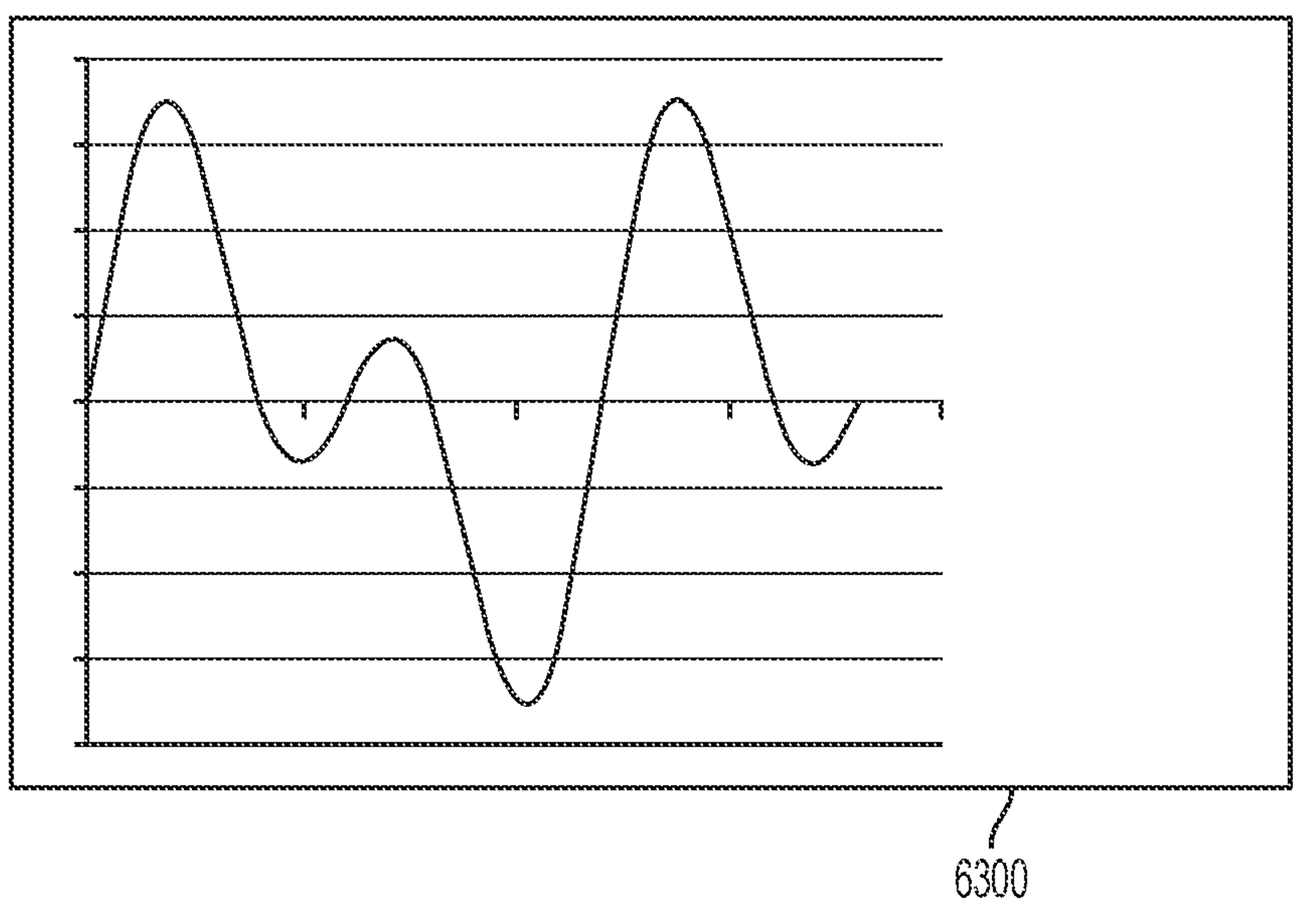

FIG. 48

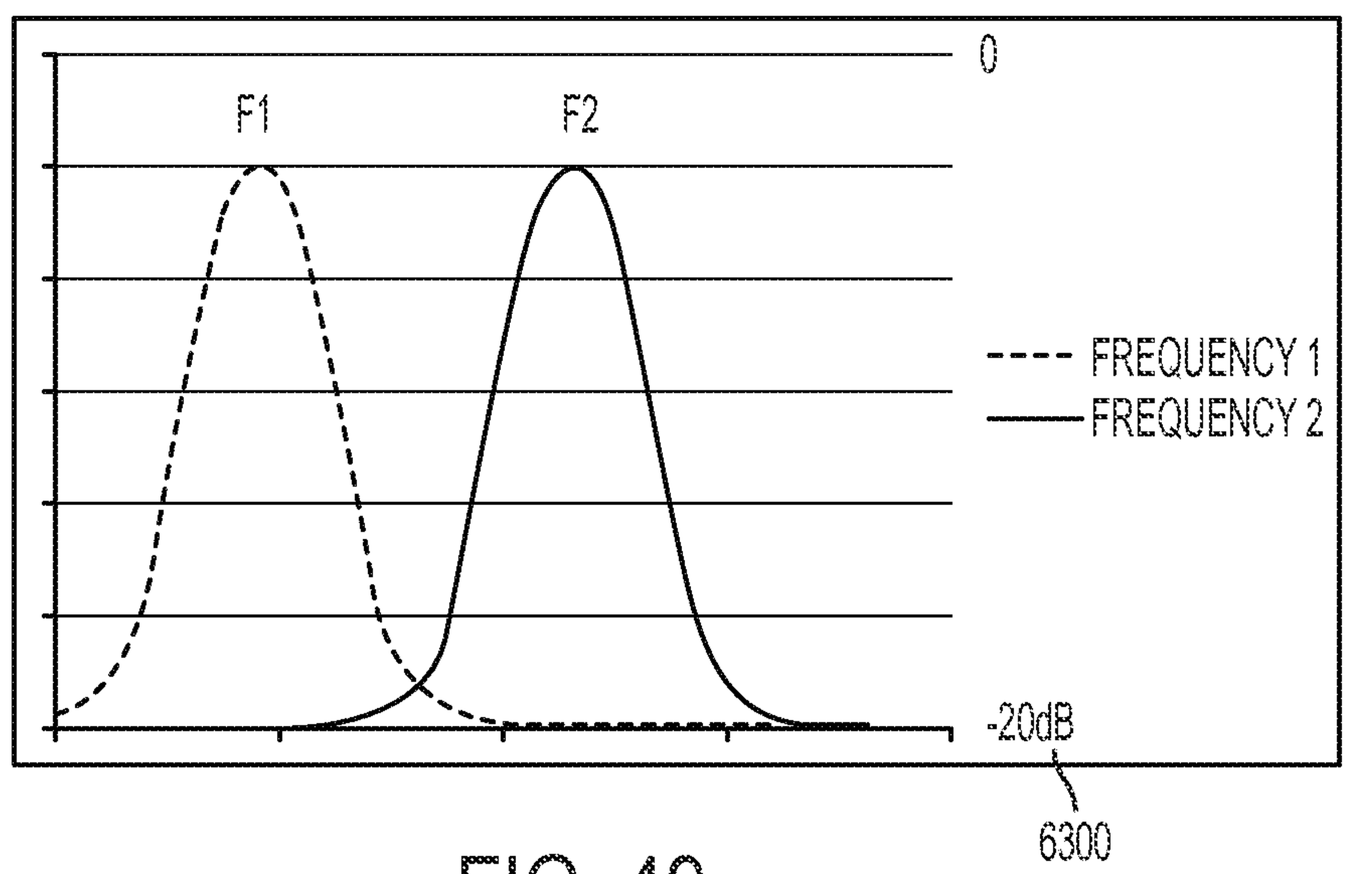

FIG. 49

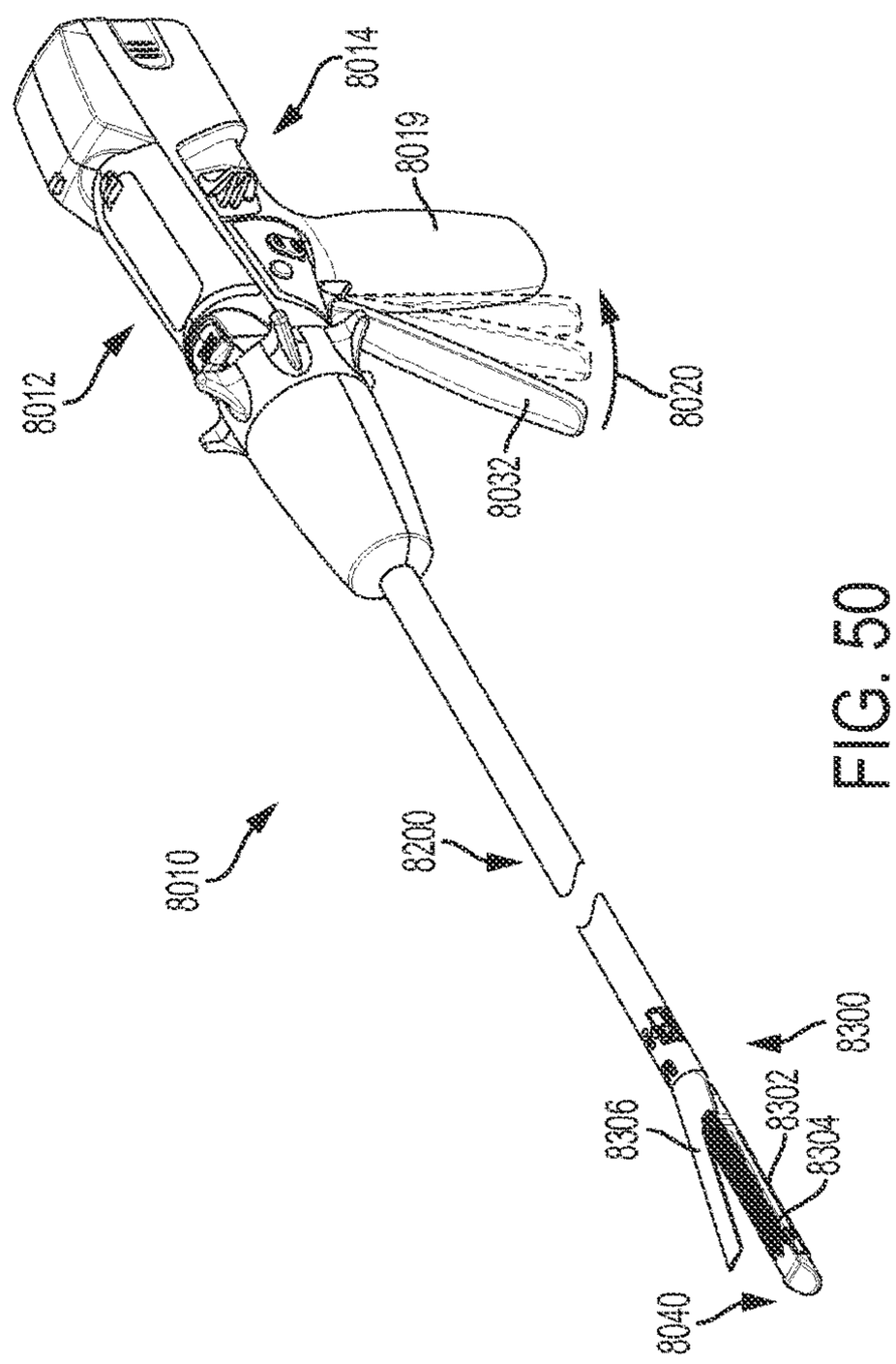
8014
8019
8012
8020
8032
8010
8200
8300
8306
8302
8304
8040

FIG. 50

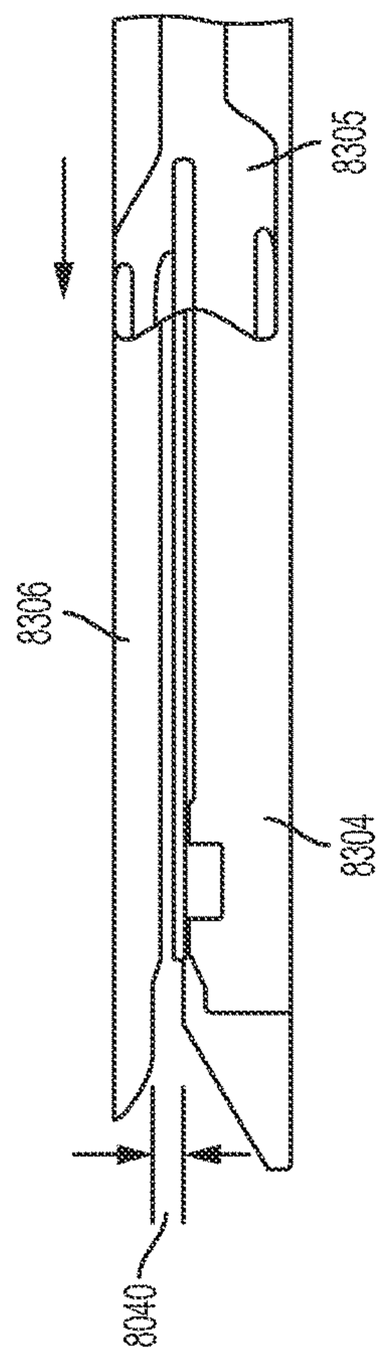
8305
8306
8304
8040

FIG. 51

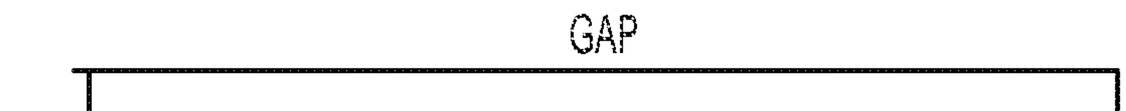

FIG. 52A

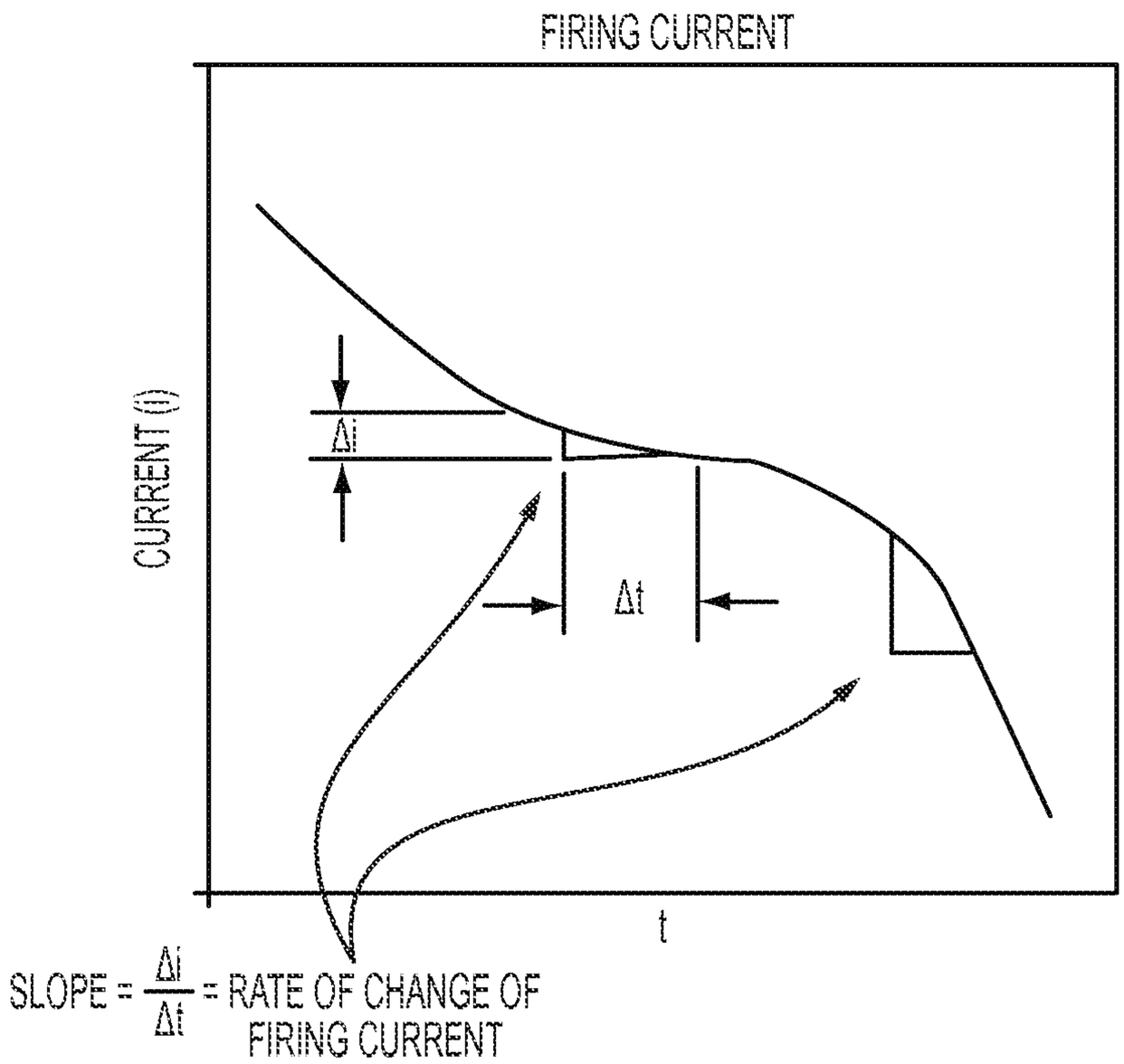
FIRING CURRENT
CURRENT (i)
Δi
Δt
t
SLOPE = Δi/Δt = RATE OF CHANGE OF FIRING CURRENT

FIG. 52B

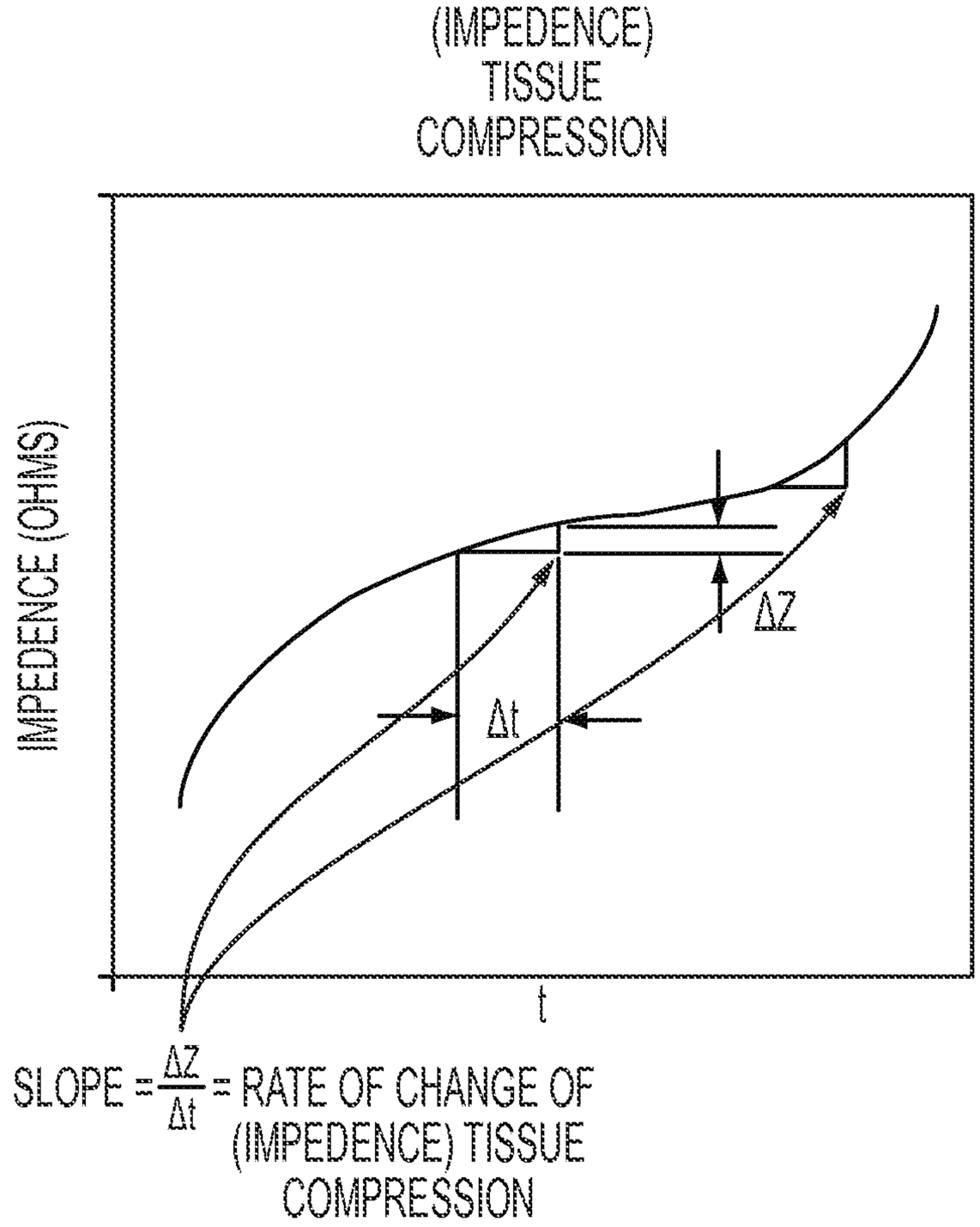
(IMPEDENCE)
TISSUE
COMPRESSION
IMPEDENCE (OHMS)
ΔZ
Δt
t
SLOPE = ΔZ/Δt = RATE OF CHANGE OF
(IMPEDENCE) TISSUE
COMPRESSION

FIG. 52C

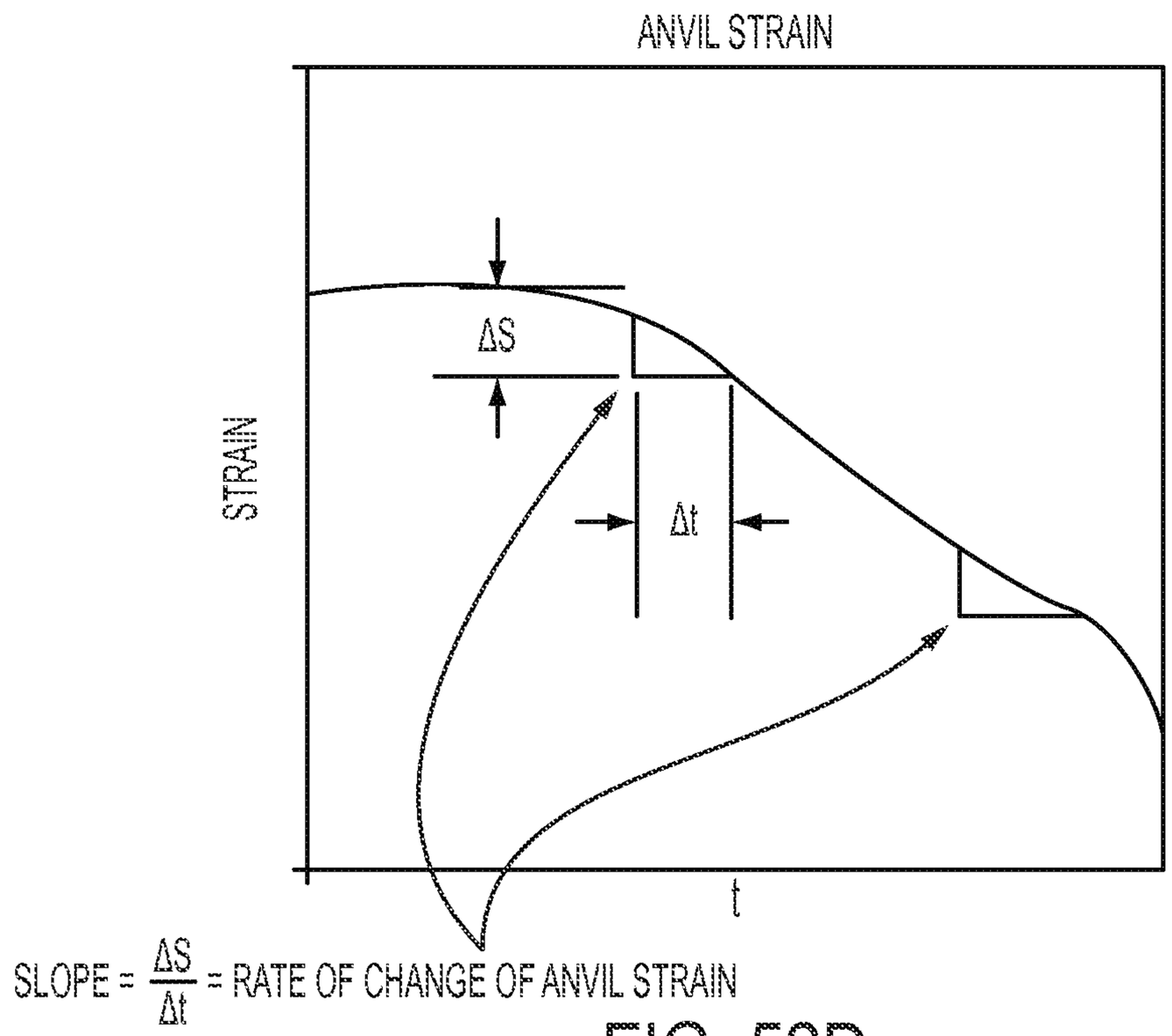
ANVIL STRAIN
STRAIN
ΔS
Δt
t
SLOPE = ΔS/Δt = RATE OF CHANGE OF ANVIL STRAIN

FIG. 52D

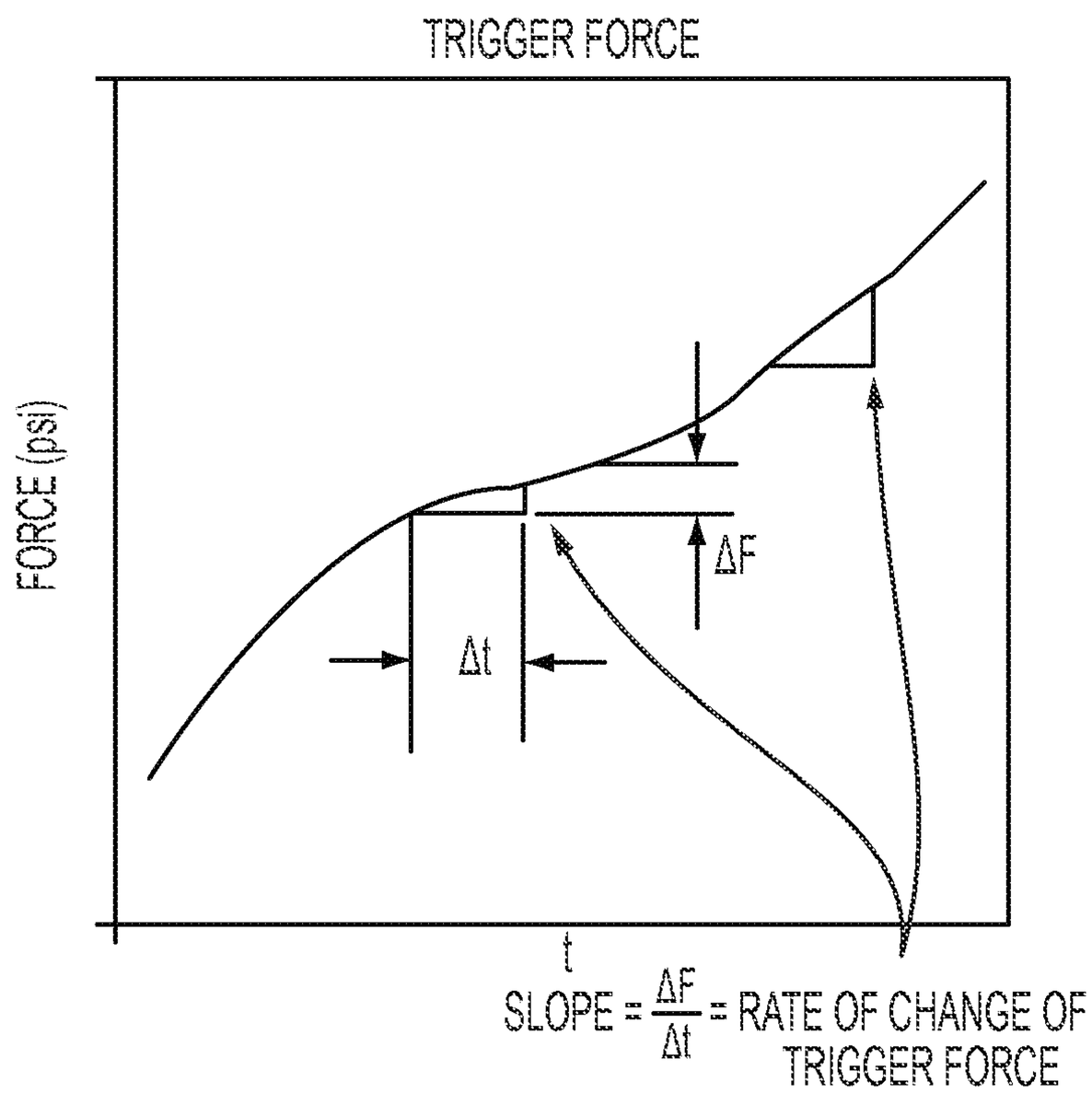
TRIGGER FORCE
FORCE (psi)
ΔF
Δt
t
SLOPE = ΔF/Δt = RATE OF CHANGE OF TRIGGER FORCE

FIG. 52E

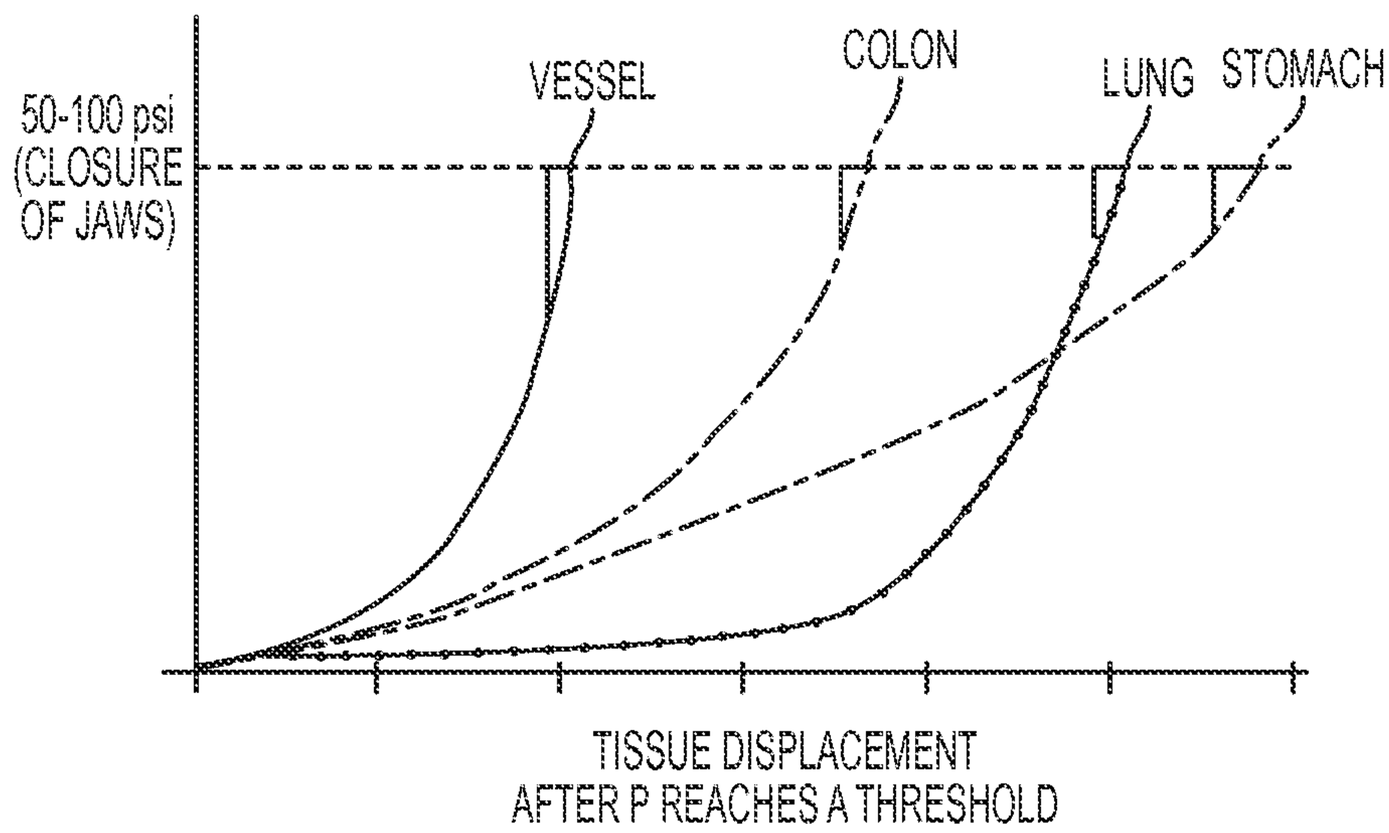
50-100 psi
(CLOSURE
OF JAWS)
VESSEL
COLON
LUNG
STOMACH
TISSUE DISPLACEMENT
AFTER P REACHES A THRESHOLD

FIG. 53

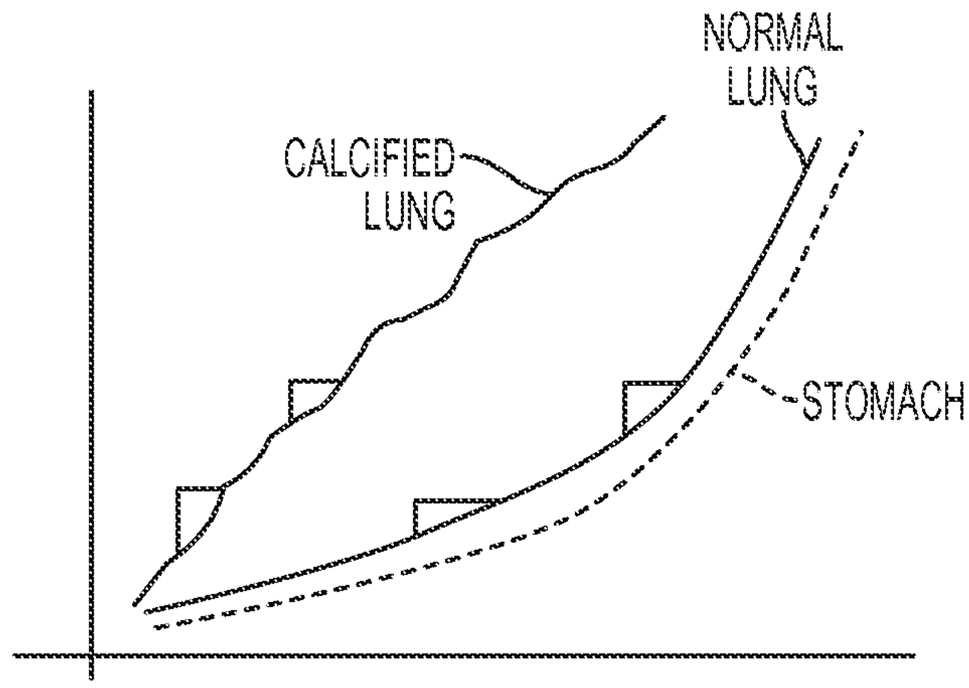
NORMAL
LUNG
CALCIFIED
LUNG
STOMACH

FIG. 54

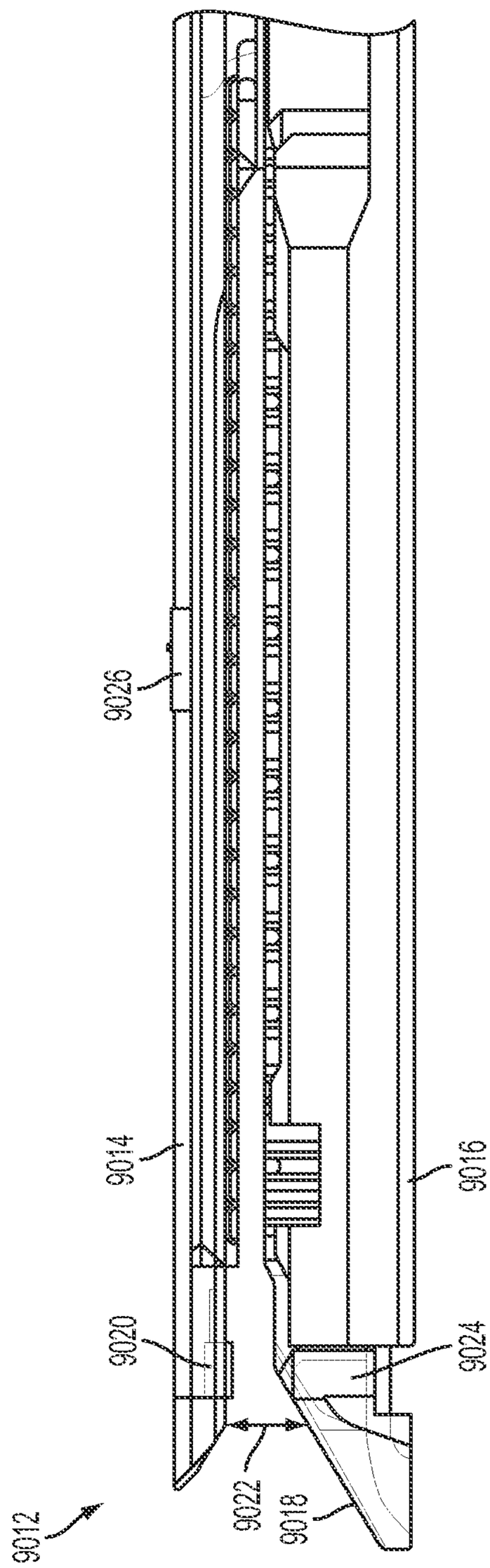

FIG. 55

TIME DEPENDENT EVALUATION OF SENSOR DATA TO DETERMINE STABILITY, CREEP, AND VISCOELASTIC ELEMENTS OF MEASURES

BACKGROUND

The present disclosure relates to surgical instruments and, in various circumstances, to surgical stapling and cutting instruments and staple cartridges therefor that are designed to staple and cut tissue.

BRIEF DESCRIPTION OF THE DRAWINGS

The features and advantages of the present disclosure, and the manner of attaining them, will become more apparent and the present disclosure will be better understood by reference to the following description of the present disclosure taken in conjunction with the accompanying drawings, wherein:

FIG. **1** is a perspective view of a surgical instrument that has an interchangeable shaft assembly operably coupled thereto;

FIG. **2** is an exploded assembly view of the interchangeable shaft assembly and surgical instrument of FIG. **1**;

FIG. **3** is another exploded assembly view showing portions of the interchangeable shaft assembly and surgical instrument of FIGS. **1** and **2**;

FIG. **4** is an exploded assembly view of a portion of the surgical instrument of FIGS. **1-3**;

FIG. **5** is a cross-sectional side view of a portion of the surgical instrument of FIG. **4** with the firing trigger in a fully actuated position;

FIG. **6** is another cross-sectional view of a portion of the surgical instrument of FIG. **5** with the firing trigger in an unactuated position;

FIG. **7** is an exploded assembly view of one form of an interchangeable shaft assembly;

FIG. **8** is another exploded assembly view of portions of the interchangeable shaft assembly of FIG. **7**;

FIG. **9** is another exploded assembly view of portions of the interchangeable shaft assembly of FIGS. **7** and **8**;

FIG. **10** is a cross-sectional view of a portion of the interchangeable shaft assembly of FIGS. **7-9**;

FIG. **11** is a perspective view of a portion of the shaft assembly of FIGS. **7-10** with the switch drum omitted for clarity;

FIG. **12** is another perspective view of the portion of the interchangeable shaft assembly of FIG. **11** with the switch drum mounted thereon;

FIG. **13** is a perspective view of a portion of the interchangeable shaft assembly of FIG. **11** operably coupled to a portion of the surgical instrument of FIG. **1** illustrated with the closure trigger thereof in an unactuated position;

FIG. **14** is a right side elevational view of the interchangeable shaft assembly and surgical instrument of FIG. **13**;

FIG. **15** is a left side elevational view of the interchangeable shaft assembly and surgical instrument of FIGS. **13** and **14**;

FIG. **16** is a perspective view of a portion of the interchangeable shaft assembly of FIG. **11** operably coupled to a portion of the surgical instrument of FIG. **1** illustrated with the closure trigger thereof in an actuated position and a firing trigger thereof in an unactuated position;

FIG. **17** is a right side elevational view of the interchangeable shaft assembly and surgical instrument of FIG. **16**;

FIG. **18** is a left side elevational view of the interchangeable shaft assembly and surgical instrument of FIGS. **16** and **17**;

FIG. **18**A is a right side elevational view of the interchangeable shaft assembly of FIG. **11** operably coupled to a portion of the surgical instrument of FIG. **1** illustrated with the closure trigger thereof in an actuated position and the firing trigger thereof in an actuated position;

FIG. **19** is a schematic of a system for powering down an electrical connector of a surgical instrument handle when a shaft assembly is not coupled thereto;

FIG. **20** is an exploded view of one aspect of an end effector of the surgical instrument of FIG. **1**;

FIGS. **21**A-**21**B is a circuit diagram of the surgical instrument of FIG. **1** spanning two drawings sheets;

FIG. **22** illustrates one instance of a power assembly comprising a usage cycle circuit configured to generate a usage cycle count of the battery back;

FIG. **23** illustrates one aspect of a process for sequentially energizing a segmented circuit;

FIG. **24** illustrates one aspect of a power segment comprising a plurality of daisy chained power converters;

FIG. **25** illustrates one aspect of a segmented circuit configured to maximize power available for critical and/or power intense functions;

FIG. **26** illustrates one aspect of a power system comprising a plurality of daisy chained power converters configured to be sequentially energized;

FIG. **27** illustrates one aspect of a segmented circuit comprising an isolated control section;

FIG. **28**, which is divided into FIGS. **28**A and **28**B, is a circuit diagram of the surgical instrument of FIG. **1**;

FIG. **29** is a block diagram the surgical instrument of FIG. **1** illustrating interfaces between the handle assembly **14** and the power assembly and between the handle assembly **14** and the interchangeable shaft assembly;

FIG. **30** depicts an example medical device that can include one or more aspects of the present disclosure;

FIG. **31**A depicts an example end-effector of a medical device surrounding tissue in accordance with one or more aspects of the present disclosure;

FIG. **31**B depicts an example end-effector of a medical device compressing tissue in accordance with one or more aspects of the present disclosure;

FIG. **32**A depicts example forces exerted by an end-effector of a medical device compressing tissue in accordance with one or more aspects of the present disclosure;

FIG. **32**B also depicts example forces exerted by an end-effector of a medical device compressing tissue in accordance with one or more aspects of the present disclosure;

FIG. **33** depicts an example tissue compression sensor system in accordance with one or more aspects of the present disclosure;

FIG. **34** also depicts an example tissue compression sensor system in accordance with one or more aspects of the present disclosure;

FIG. **35** also depicts an example tissue compression sensor system in accordance with one or more aspects of the present disclosure;

FIG. **36** depicts an example end-effector channel frame in accordance with one or more aspects of the present disclosure;

FIG. **37** depicts an example end-effector in accordance with one or more aspects of the present disclosure;

FIG. **38** also depicts an example end-effector channel frame in accordance with one or more aspects of the present disclosure;

FIG. **39** also depicts an example end-effector channel frame in accordance with one or more aspects of the present disclosure;

FIG. **40** also depicts an example end-effector channel frame in accordance with one or more aspects of the present disclosure;

FIG. **41** depicts an example electrode in accordance with one or more aspects of the present disclosure;

FIG. **42** depicts an example electrode wiring system in accordance with one or more aspects of the present disclosure;

FIG. **43** also depicts an example end-effector channel frame in accordance with one or more aspects of the present disclosure;

FIG. **44** is an example circuit diagram in accordance with one or more aspects of the present disclosure;

FIG. **45** is also an example circuit diagram in accordance with one or more aspects of the present disclosure;

FIG. **46** is also an example circuit diagram in accordance with one or more aspects of the present disclosure;

FIG. **47** is graph depicting an example frequency modulation in accordance with one or more aspects of the present disclosure;

FIG. **48** is graph depicting a compound RF signal in accordance with one or more aspects of the present disclosure;

FIG. **49** is graph depicting filtered RF signals in accordance with one or more aspects of the present disclosure;

FIG. **50** is a perspective view of a surgical instrument with an articulable, interchangeable shaft;

FIG. **51** is a side view of the tip of the surgical instrument shown in FIG. **76**;

FIGS. **52**A-**52**E are graphs plotting gap size over time (FIG. **52**A), firing current over time (FIG. **52**B), tissue compression over time (FIG. **52**C), anvil strain over time (FIG. **752**D), and trigger force over time (FIG. **52**E);

FIG. **53** is a graph plotting tissue displacement as a function of tissue compression for normal tissues;

FIG. **54** is a graph plotting tissue displacement as a function of tissue compression to distinguish normal and diseased tissues; and

FIG. **55** illustrates a cross-sectional view of an end effector of a surgical instrument in accordance with one aspect.

DESCRIPTION

Applicant of the present application owns the following patent applications that were filed on Mar. 6, 2015 and which are each herein incorporated by reference in their respective entireties:

U.S. patent application Ser. No. 14/640,746, entitled POWERED SURGICAL INSTRUMENT, now U.S. Patent Application Publication No. 2016/0256184;

U.S. patent application Ser. No. 14/640,795, entitled MULTIPLE LEVEL THRESHOLDS TO MODIFY OPERATION OF POWERED SURGICAL INSTRUMENTS, now U.S. Patent Application Publication No. 2016/0256185;

U.S. patent application Ser. No. 14/640,832, entitled ADAPTIVE TISSUE COMPRESSION TECHNIQUES TO ADJUST CLOSURE RATES FOR MULTIPLE TISSUE TYPES, now U.S. Patent Application Publication No. 2016/0256154;

U.S. patent application Ser. No. 14/640,831, entitled MONITORING SPEED CONTROL AND PRECISION INCREMENTING OF MOTOR FOR POWERED SURGICAL INSTRUMENTS, now U.S. Patent Application Publication No. 2016/0256153;

U.S. patent application Ser. No. 14/640,817, entitled INTERACTIVE FEEDBACK SYSTEM FOR POWERED SURGICAL INSTRUMENTS, now U.S. Patent Application Publication No. 2016/0256186;

U.S. patent application Ser. No. 14/460,844, entitled CONTROL TECHNIQUES AND SUB-PROCESSOR CONTAINED WITHIN MODULAR SHAFT WITH SELECT CONTROL PROCESSING FROM HANDLE, now U.S. Patent Application Publication No. 2016/0256155;

U.S. patent application Ser. No. 14/640,837, entitled SMART SENSORS WITH LOCAL SIGNAL PROCESSING, now U.S. Patent Application Publication No. 2016/0256163;

U.S. patent application Ser. No. 14/640,780, entitled SURGICAL INSTRUMENT COMPRISING A LOCKABLE BATTERY HOUSING, now U.S. Patent Application Publication No. 2016/0256161;

U.S. patent application Ser. No. 14/640,765, entitled SYSTEM FOR DETECTING THE MIS-INSERTION OF A STAPLE CARTRIDGE INTO A SURGICAL STAPLER, now U.S. Patent Application Publication No. 2016/0256160; and

U.S. patent application Ser. No. 14/640,799, entitled SIGNAL AND POWER COMMUNICATION SYSTEM POSITIONED ON A ROTATABLE SHAFT, now U.S. Patent Application Publication No. 2016/0256162.

Applicant of the present application owns the following patent applications that were filed on Feb. 27, 2015, and which are each herein incorporated by reference in their respective entireties:

- U.S. patent application Ser. No. 14/633,576, entitled SURGICAL INSTRUMENT SYSTEM COMPRISING AN INSPECTION STATION;
- U.S. patent application Ser. No. 14/633,546, entitled SURGICAL APPARATUS CONFIGURED TO ASSESS WHETHER A PERFORMANCE PARAMETER OF THE SURGICAL APPARATUS IS WITHIN AN ACCEPTABLE PERFORMANCE BAND;
- U.S. patent application Ser. No. 14/633,560, entitled SURGICAL CHARGING SYSTEM THAT CHARGES AND/OR CONDITIONS ONE OR MORE BATTERIES;
- U.S. patent application Ser. No. 14/633,566, entitled CHARGING SYSTEM THAT ENABLES EMERGENCY RESOLUTIONS FOR CHARGING A BATTERY;
- U.S. patent application Ser. No. 14/633,555, entitled SYSTEM FOR MONITORING WHETHER A SURGICAL INSTRUMENT NEEDS TO BE SERVICED;
- U.S. patent application Ser. No. 14/633,542, entitled REINFORCED BATTERY FOR A SURGICAL INSTRUMENT;
- U.S. patent application Ser. No. 14/633,548, entitled POWER ADAPTER FOR A SURGICAL INSTRUMENT;
- U.S. patent application Ser. No. 14/633,526, entitled ADAPTABLE SURGICAL INSTRUMENT HANDLE;
- U.S. patent application Ser. No. 14/633,541, entitled MODULAR STAPLING ASSEMBLY; and

U.S. patent application Ser. No. 14/633,562, entitled SURGICAL APPARATUS CONFIGURED TO TRACK AN END-OF-LIFE PARAMETER.

Applicant of the present application owns the following patent applications that were filed on Dec. 18, 2014 and which are each herein incorporated by reference in their respective entireties:

U.S. patent application Ser. No. 14/574,478, entitled SURGICAL INSTRUMENT SYSTEMS COMPRISING AN ARTICULATABLE END EFFECTOR AND MEANS FOR ADJUSTING THE FIRING STROKE OF A FIRING;

U.S. patent application Ser. No. 14/574,483, entitled SURGICAL INSTRUMENT ASSEMBLY COMPRISING LOCKABLE SYSTEMS;

U.S. patent application Ser. No. 14/575,139, entitled DRIVE ARRANGEMENTS FOR ARTICULATABLE SURGICAL INSTRUMENTS;

U.S. patent application Ser. No. 14/575,148, entitled LOCKING ARRANGEMENTS FOR DETACHABLE SHAFT ASSEMBLIES WITH ARTICULATABLE SURGICAL END EFFECTORS;

U.S. patent application Ser. No. 14/575,130, entitled SURGICAL INSTRUMENT WITH AN ANVIL THAT IS SELECTIVELY MOVABLE ABOUT A DISCRETE NON-MOVABLE AXIS RELATIVE TO A STAPLE CARTRIDGE;

U.S. patent application Ser. No. 14/575,143, entitled SURGICAL INSTRUMENTS WITH IMPROVED CLOSURE ARRANGEMENTS;

U.S. patent application Ser. No. 14/575,117, entitled SURGICAL INSTRUMENTS WITH ARTICULATABLE END EFFECTORS AND MOVABLE FIRING BEAM SUPPORT ARRANGEMENTS;

U.S. patent application Ser. No. 14/575,154, entitled SURGICAL INSTRUMENTS WITH ARTICULATABLE END EFFECTORS AND IMPROVED FIRING BEAM SUPPORT ARRANGEMENTS;

U.S. patent application Ser. No. 14/574,493, entitled SURGICAL INSTRUMENT ASSEMBLY COMPRISING A FLEXIBLE ARTICULATION SYSTEM; and

U.S. patent application Ser. No. 14/574,500, entitled SURGICAL INSTRUMENT ASSEMBLY COMPRISING A LOCKABLE ARTICULATION SYSTEM.

Applicant of the present application owns the following patent applications that were filed on Mar. 1, 2013 and which are each herein incorporated by reference in their respective entireties:

U.S. patent application Ser. No. 13/782,295, entitled ARTICULATABLE SURGICAL INSTRUMENTS WITH CONDUCTIVE PATHWAYS FOR SIGNAL COMMUNICATION, now U.S. Patent Application Publication No. 2014/0246471;

U.S. patent application Ser. No. 13/782,323, entitled ROTARY POWERED ARTICULATION JOINTS FOR SURGICAL INSTRUMENTS, now U.S. Patent Application Publication No. 2014/0246472;

U.S. patent application Ser. No. 13/782,338, entitled THUMBWHEEL SWITCH ARRANGEMENTS FOR SURGICAL INSTRUMENTS, now U.S. Patent Application Publication No. 2014/0249557;

U.S. patent application Ser. No. 13/782,499, entitled ELECTROMECHANICAL SURGICAL DEVICE WITH SIGNAL RELAY ARRANGEMENT, now U.S. Patent Application Publication No. 2014/0246474;

U.S. patent application Ser. No. 13/782,460, entitled MULTIPLE PROCESSOR MOTOR CONTROL FOR MODULAR SURGICAL INSTRUMENTS, now U.S. Patent Application Publication No. 2014/0246478;

U.S. patent application Ser. No. 13/782,358, entitled JOYSTICK SWITCH ASSEMBLIES FOR SURGICAL INSTRUMENTS, now U.S. Patent Application Publication No. 2014/0246477;

U.S. patent application Ser. No. 13/782,481, entitled SENSOR STRAIGHTENED END EFFECTOR DURING REMOVAL THROUGH TROCAR, now U.S. Patent Application Publication No. 2014/0246479;

U.S. patent application Ser. No. 13/782,518, entitled CONTROL METHODS FOR SURGICAL INSTRUMENTS WITH REMOVABLE IMPLEMENT PORTIONS, now U.S. Patent Application Publication No. 2014/0246475;

U.S. patent application Ser. No. 13/782,375, entitled ROTARY POWERED SURGICAL INSTRUMENTS WITH MULTIPLE DEGREES OF FREEDOM, now U.S. Patent Application Publication No. 2014/0246473; and

U.S. patent application Ser. No. 13/782,536, entitled SURGICAL INSTRUMENT SOFT STOP, now U.S. Patent Application Publication No. 2014/0246476.

Applicant of the present application also owns the following patent applications that were filed on Mar. 14, 2013 and which are each herein incorporated by reference in their respective entireties:

U.S. patent application Ser. No. 13/803,097, entitled ARTICULATABLE SURGICAL INSTRUMENT COMPRISING A FIRING DRIVE, now U.S. Patent Application Publication No. 2014/0263542;

U.S. patent application Ser. No. 13/803,193, entitled CONTROL ARRANGEMENTS FOR A DRIVE MEMBER OF A SURGICAL INSTRUMENT, now U.S. Patent Application Publication No. 2014/0263537;

U.S. patent application Ser. No. 13/803,053, entitled INTERCHANGEABLE SHAFT ASSEMBLIES FOR USE WITH A SURGICAL INSTRUMENT, now U.S. Patent Application Publication No. 2014/0263564;

U.S. patent application Ser. No. 13/803,086, entitled ARTICULATABLE SURGICAL INSTRUMENT COMPRISING AN ARTICULATION LOCK, now U.S. Patent Application Publication No. 2014/0263541;

U.S. patent application Ser. No. 13/803,210, entitled SENSOR ARRANGEMENTS FOR ABSOLUTE POSITIONING SYSTEM FOR SURGICAL INSTRUMENTS, now U.S. Patent Application Publication No. 2014/0263538;

U.S. patent application Ser. No. 13/803,148, entitled MULTI-FUNCTION MOTOR FOR A SURGICAL INSTRUMENT, now U.S. Patent Application Publication No. 2014/0263554;

U.S. patent application Ser. No. 13/803,066, entitled DRIVE SYSTEM LOCKOUT ARRANGEMENTS FOR MODULAR SURGICAL INSTRUMENTS, now U.S. Patent Application Publication No. 2014/0263565;

U.S. patent application Ser. No. 13/803,117, entitled ARTICULATION CONTROL SYSTEM FOR ARTICULATABLE SURGICAL INSTRUMENTS, now U.S. Patent Application Publication No. 2014/0263553;

U.S. patent application Ser. No. 13/803,130, entitled DRIVE TRAIN CONTROL ARRANGEMENTS FOR MODULAR SURGICAL INSTRUMENTS, now U.S. Patent Application Publication No. 2014/0263543; and

U.S. patent application Ser. No. 13/803,159, entitled METHOD AND SYSTEM FOR OPERATING A SURGICAL INSTRUMENT, now U.S. Patent Application Publication No. 2014/0277017.

Applicant of the present application also owns the following patent application that was filed on Mar. 7, 2014 and is herein incorporated by reference in its entirety:

U.S. patent application Ser. No. 14/200,111, entitled CONTROL SYSTEMS FOR SURGICAL INSTRUMENTS, now U.S. Patent Application Publication No. 2014/0263539.

Applicant of the present application also owns the following patent applications that were filed on Mar. 26, 2014 and are each herein incorporated by reference in their respective entireties:

U.S. patent application Ser. No. 14/226,106, entitled POWER MANAGEMENT CONTROL SYSTEMS FOR SURGICAL INSTRUMENTS;

U.S. patent application Ser. No. 14/226,099, entitled STERILIZATION VERIFICATION CIRCUIT;

U.S. patent application Ser. No. 14/226,094, entitled VERIFICATION OF NUMBER OF BATTERY EXCHANGES/PROCEDURE COUNT;

U.S. patent application Ser. No. 14/226,117, entitled POWER MANAGEMENT THROUGH SLEEP OPTIONS OF SEGMENTED CIRCUIT AND WAKE UP CONTROL;

U.S. patent application Ser. No. 14/226,075, entitled MODULAR POWERED SURGICAL INSTRUMENT WITH DETACHABLE SHAFT ASSEMBLIES;

U.S. patent application Ser. No. 14/226,093, entitled FEEDBACK ALGORITHMS FOR MANUAL BAILOUT SYSTEMS FOR SURGICAL INSTRUMENTS;

U.S. patent application Ser. No. 14/226,116, entitled SURGICAL INSTRUMENT UTILIZING SENSOR ADAPTATION;

U.S. patent application Ser. No. 14/226,071, entitled SURGICAL INSTRUMENT CONTROL CIRCUIT HAVING A SAFETY PROCESSOR;

U.S. patent application Ser. No. 14/226,097, entitled SURGICAL INSTRUMENT COMPRISING INTERACTIVE SYSTEMS;

U.S. patent application Ser. No. 14/226,126, entitled INTERFACE SYSTEMS FOR USE WITH SURGICAL INSTRUMENTS;

U.S. patent application Ser. No. 14/226,133, entitled MODULAR SURGICAL INSTRUMENT SYSTEM;

U.S. patent application Ser. No. 14/226,081, entitled SYSTEMS AND METHODS FOR CONTROLLING A SEGMENTED CIRCUIT;

U.S. patent application Ser. No. 14/226,076, entitled POWER MANAGEMENT THROUGH SEGMENTED CIRCUIT AND VARIABLE VOLTAGE PROTECTION;

U.S. patent application Ser. No. 14/226,111, entitled SURGICAL STAPLING INSTRUMENT SYSTEM; and

U.S. patent application Ser. No. 14/226,125, entitled SURGICAL INSTRUMENT COMPRISING A ROTATABLE SHAFT.

Applicant of the present application also owns the following patent applications that were filed on Sep. 5, 2014 and which are each herein incorporated by reference in their respective entireties:

U.S. patent application Ser. No. 14/479,103, entitled CIRCUITRY AND SENSORS FOR POWERED MEDICAL DEVICE;

U.S. patent application Ser. No. 14/479,119, entitled ADJUNCT WITH INTEGRATED SENSORS TO QUANTIFY TISSUE COMPRESSION;

U.S. patent application Ser. No. 14/478,908, entitled MONITORING DEVICE DEGRADATION BASED ON COMPONENT EVALUATION;

U.S. patent application Ser. No. 14/478,895, entitled MULTIPLE SENSORS WITH ONE SENSOR AFFECTING A SECOND SENSOR'S OUTPUT OR INTERPRETATION;

U.S. patent application Ser. No. 14/479,110, entitled USE OF POLARITY OF HALL MAGNET DETECTION TO DETECT MISLOADED CARTRIDGE;

U.S. patent application Ser. No. 14/479,098, entitled SMART CARTRIDGE WAKE UP OPERATION AND DATA RETENTION;

U.S. patent application Ser. No. 14/479,115, entitled MULTIPLE MOTOR CONTROL FOR POWERED MEDICAL DEVICE; and

U.S. patent application Ser. No. 14/479,108, entitled LOCAL DISPLAY OF TISSUE PARAMETER STABILIZATION.

Applicant of the present application also owns the following patent applications that were filed on Apr. 9, 2014 and which are each herein incorporated by reference in their respective entireties:

U.S. patent application Ser. No. 14/248,590, entitled MOTOR DRIVEN SURGICAL INSTRUMENTS WITH LOCKABLE DUAL DRIVE SHAFTS, now U.S. Patent Application Publication No. 2014/0305987;

U.S. patent application Ser. No. 14/248,581, entitled SURGICAL INSTRUMENT COMPRISING A CLOSING DRIVE AND A FIRING DRIVE OPERATED FROM THE SAME ROTATABLE OUTPUT, now U.S. Patent Application Publication No. 2014/0305989;

U.S. patent application Ser. No. 14/248,595, entitled SURGICAL INSTRUMENT SHAFT INCLUDING SWITCHES FOR CONTROLLING THE OPERATION OF THE SURGICAL INSTRUMENT, now U.S. Patent Application Publication No. 2014/0305988;

U.S. patent application Ser. No. 14/248,588, entitled POWERED LINEAR SURGICAL STAPLER, now U.S. Patent Application Publication No. 2014/0309666;

U.S. patent application Ser. No. 14/248,591, entitled TRANSMISSION ARRANGEMENT FOR A SURGICAL INSTRUMENT, now U.S. Patent Application Publication No. 2014/0305991;

U.S. patent application Ser. No. 14/248,584, entitled MODULAR MOTOR DRIVEN SURGICAL INSTRUMENTS WITH ALIGNMENT FEATURES FOR ALIGNING ROTARY DRIVE SHAFTS WITH SURGICAL END EFFECTOR SHAFTS, now U.S. Patent Application Publication No. 2014/0305994;

U.S. patent application Ser. No. 14/248,587, entitled POWERED SURGICAL STAPLER, now U.S. Patent Application Publication No. 2014/0309665;

U.S. patent application Ser. No. 14/248,586, entitled DRIVE SYSTEM DECOUPLING ARRANGEMENT FOR A SURGICAL INSTRUMENT, now U.S. Patent Application Publication No. 2014/0305990; and

U.S. patent application Ser. No. 14/248,607, entitled MODULAR MOTOR DRIVEN SURGICAL INSTRUMENTS WITH STATUS INDICATION ARRANGEMENTS, now U.S. Patent Application Publication No. 2014/0305992.

Applicant of the present application also owns the following patent applications that were filed on Apr. 16, 2013 and which are each herein incorporated by reference in their respective entireties:

U.S. Provisional Patent Application Ser. No. 61/812,365, entitled SURGICAL INSTRUMENT WITH MULTIPLE FUNCTIONS PERFORMED BY A SINGLE MOTOR;

U.S. Provisional Patent Application Ser. No. 61/812,376, entitled LINEAR CUTTER WITH POWER;

U.S. Provisional Patent Application Ser. No. 61/812,382, entitled LINEAR CUTTER WITH MOTOR AND PISTOL GRIP;

U.S. Provisional Patent Application Ser. No. 61/812,385, entitled SURGICAL INSTRUMENT HANDLE WITH MULTIPLE ACTUATION MOTORS AND MOTOR CONTROL; and

U.S. Provisional Patent Application Ser. No. 61/812,372, entitled SURGICAL INSTRUMENT WITH MULTIPLE FUNCTIONS PERFORMED BY A SINGLE MOTOR.

The present disclosure provides an overall understanding of the principles of the structure, function, manufacture, and use of the devices and methods disclosed herein. One or more examples of these aspects are illustrated in the accompanying drawings. Those of ordinary skill in the art will understand that the devices and methods specifically described herein and illustrated in the accompanying drawings are non-limiting examples. The features illustrated or described in connection with one example may be combined with the features of other examples. Such modifications and variations are intended to be included within the scope of the present disclosure.

Reference throughout the specification to "various aspects," "some aspects," "one aspect," or "an aspect", or the like, means that a particular feature, structure, or characteristic described in connection with the aspect is included in at least one aspect. Thus, appearances of the phrases "in various aspects," "in some aspects," "in one aspect", or "in an aspect", or the like, in places throughout the specification are not necessarily all referring to the same aspect. Furthermore, the particular features, structures, or characteristics may be combined in any suitable manner in one or more aspects. Thus, the particular features, structures, or characteristics illustrated or described in connection with one aspect may be combined, in whole or in part, with the features structures, or characteristics of one or more other aspects without limitation. Such modifications and variations are intended to be included within the scope of the present disclosure.

The terms "proximal" and "distal" are used herein with reference to a clinician manipulating the handle portion of the surgical instrument. The term "proximal" referring to the portion closest to the clinician and the term "distal" referring to the portion located away from the clinician. It will be further appreciated that, for convenience and clarity, spatial terms such as "vertical," "horizontal," "up," and "down" may be used herein with respect to the drawings. However, surgical instruments are used in many orientations and positions, and these terms are not intended to be limiting and/or absolute.

Various example devices and methods are provided for performing laparoscopic and minimally invasive surgical procedures. However, the person of ordinary skill in the art will readily appreciate that the various methods and devices disclosed herein can be used in numerous surgical procedures and applications including, for example, in connection with open surgical procedures. As the present Detailed Description proceeds, those of ordinary skill in the art will further appreciate that the various instruments disclosed herein can be inserted into a body in any way, such as through a natural orifice, through an incision or puncture hole formed in tissue, etc. The working portions or end effector portions of the instruments can be inserted directly into a patient's body or can be inserted through an access device that has a working channel through which the end effector and elongated shaft of a surgical instrument can be advanced.

FIGS. **1-6** depict a motor-driven surgical cutting and fastening instrument **10** that may or may not be reused. In the illustrated examples, the instrument **10** includes a housing **12** that comprises a handle assembly **14** that is configured to be grasped, manipulated and actuated by the clinician. The housing **12** is configured for operable attachment to an interchangeable shaft assembly **200** that has a surgical end effector **300** operably coupled thereto that is configured to perform one or more surgical tasks or procedures. As the present Detailed Description proceeds, it will be understood that the various unique and novel arrangements of the various forms of interchangeable shaft assemblies disclosed herein also may be effectively employed in connection with robotically-controlled surgical systems. Thus, the term "housing" also may encompass a housing or similar portion of a robotic system that houses or otherwise operably supports at least one drive system that is configured to generate and apply at least one control motion which could be used to actuate the interchangeable shaft assemblies disclosed herein and their respective equivalents. The term "frame" may refer to a portion of a handheld surgical instrument. The term "frame" also may represent a portion of a robotically controlled surgical instrument and/or a portion of the robotic system that may be used to operably control a surgical instrument. For example, the interchangeable shaft assemblies disclosed herein may be employed with various robotic systems, instruments, components and methods disclosed in U.S. patent application Ser. No. 13/118,241, entitled SURGICAL STAPLING INSTRUMENTS WITH ROTATABLE STAPLE DEPLOYMENT ARRANGEMENTS, now U.S. Patent Application Publication No. US 2012/0298719. U.S. patent application Ser. No. 13/118,241, entitled SURGICAL STAPLING INSTRUMENTS WITH ROTATABLE STAPLE DEPLOYMENT ARRANGEMENTS, now U.S. Patent Application Publication No. US 2012/0298719, is incorporated by reference herein in its entirety.

The housing **12** depicted in FIGS. **1-3** is shown in connection with an interchangeable shaft assembly **200** that includes an end effector **300** that comprises a surgical cutting and fastening device that is configured to operably support a surgical staple cartridge **304** therein. The housing **12** may be configured for use in connection with interchangeable shaft assemblies that include end effectors that are adapted to support different sizes and types of staple cartridges, have different shaft lengths, sizes, and types, etc. In addition, the housing **12** also may be effectively employed with a variety of other interchangeable shaft assemblies including those assemblies that are configured to apply other motions and forms of energy such as, for example, radio frequency (RF) energy, ultrasonic energy and/or motion to end effector arrangements adapted for use in connection with various surgical applications and procedures. Furthermore, the end effectors, shaft assemblies, handles, surgical instruments, and/or surgical instrument systems can utilize any suitable fastener, or fasteners, to fasten tissue. For instance, a fastener cartridge comprising a plurality of fasteners removably stored therein can be removably inserted into and/or attached to the end effector of a shaft assembly.

FIG. **1** illustrates the surgical instrument **10** with an interchangeable shaft assembly **200** operably coupled thereto. FIGS. **2** and **3** illustrate attachment of the interchangeable shaft assembly **200** to the housing **12** or handle assembly **14**. As shown in FIG. **4**, the handle assembly **14**

may comprise a pair of interconnectable handle housing segments **16** and **18** that may be interconnected by screws, snap features, adhesive, etc. In the illustrated arrangement, the handle housing segments **16**, **18** cooperate to form a pistol grip portion **19** that can be gripped and manipulated by the clinician. As will be discussed in further detail below, the handle assembly **14** operably supports a plurality of drive systems therein that are configured to generate and apply various control motions to corresponding portions of the interchangeable shaft assembly that is operably attached thereto.

Referring now to FIG. **4**, the handle assembly **14** may further include a frame **20** that operably supports a plurality of drive systems. For example, the frame **20** can operably support a "first" or closure drive system, generally designated as **30**, which may be employed to apply closing and opening motions to the interchangeable shaft assembly **200** that is operably attached or coupled thereto. In at least one form, the closure drive system **30** may include an actuator in the form of a closure trigger **32** that is pivotally supported by the frame **20**. More specifically, as illustrated in FIG. **4**, the closure trigger **32** is pivotally coupled to the housing **14** by a pin **33**. Such arrangement enables the closure trigger **32** to be manipulated by a clinician such that when the clinician grips the pistol grip portion **19** of the handle assembly **14**, the closure trigger **32** may be easily pivoted from a starting or "unactuated" position to an "actuated" position and more particularly to a fully compressed or fully actuated position. The closure trigger **32** may be biased into the unactuated position by spring or other biasing arrangement (not shown). In various forms, the closure drive system **30** further includes a closure linkage assembly **34** that is pivotally coupled to the closure trigger **32**. As shown in FIG. **4**, the closure linkage assembly **34** may include a first closure link **36** and a second closure link **38** that are pivotally coupled to the closure trigger **32** by a pin **35**. The second closure link **38** also may be referred to herein as an "attachment member" and include a transverse attachment pin **37**.

Still referring to FIG. **4**, it can be observed that the first closure link **36** may have a locking wall or end **39** thereon that is configured to cooperate with a closure release assembly **60** that is pivotally coupled to the frame **20**. In at least one form, the closure release assembly **60** may comprise a release button assembly **62** that has a distally protruding locking pawl **64** formed thereon. The release button assembly **62** may be pivoted in a counterclockwise direction by a release spring (not shown). As the clinician depresses the closure trigger **32** from its unactuated position towards the pistol grip portion **19** of the handle assembly **14**, the first closure link **36** pivots upward to a point wherein the locking pawl **64** drops into retaining engagement with the locking wall **39** on the first closure link **36** thereby preventing the closure trigger **32** from returning to the unactuated position. See FIG. **18**. Thus, the closure release assembly **60** serves to lock the closure trigger **32** in the fully actuated position. When the clinician desires to unlock the closure trigger **32** to permit it to be biased to the unactuated position, the clinician simply pivots the closure release button assembly **62** such that the locking pawl **64** is moved out of engagement with the locking wall **39** on the first closure link **36**. When the locking pawl **64** has been moved out of engagement with the first closure link **36**, the closure trigger **32** may pivot back to the unactuated position. Other closure trigger locking and release arrangements also may be employed.

Further to the above, FIGS. **13-15** illustrate the closure trigger **32** in its unactuated position which is associated with an open, or unclamped, configuration of the shaft assembly **200** in which tissue can be positioned between the jaws of the shaft assembly **200**. FIGS. **16-18** illustrate the closure trigger **32** in its actuated position which is associated with a closed, or clamped, configuration of the shaft assembly **200** in which tissue is clamped between the jaws of the shaft assembly **200**. Upon comparing FIGS. **14** and **17**, the reader will appreciate that, when the closure trigger **32** is moved from its unactuated position (FIG. **14**) to its actuated position (FIG. **17**), the closure release button **62** is pivoted between a first position (FIG. **14**) and a second position (FIG. **17**). The rotation of the closure release button **62** can be referred to as being an upward rotation; however, at least a portion of the closure release button **62** is being rotated toward the circuit board **100**. Referring to FIG. **4**, the closure release button **62** can include an arm **61** extending therefrom and a magnetic element **63**, such as a permanent magnet, for example, mounted to the arm **61**. When the closure release button **62** is rotated from its first position to its second position, the magnetic element **63** can move toward the circuit board **100**. The circuit board **100** can include at least one sensor configured to detect the movement of the magnetic element **63**. In at least one aspect, a magnetic field sensor **65**, for example, can be mounted to the bottom surface of the circuit board **100**. The magnetic field sensor **65** can be configured to detect changes in a magnetic field surrounding the magnetic field sensor **65** caused by the movement of the magnetic element **63**. The magnetic field sensor **65** can be in signal communication with a microcontroller **1500** (FIG. **19**), for example, which can determine whether the closure release button **62** is in its first position, which is associated with the unactuated position of the closure trigger **32** and the open configuration of the end effector, its second position, which is associated with the actuated position of the closure trigger **32** and the closed configuration of the end effector, and/or any position between the first position and the second position.

As used throughout the present disclosure, a magnetic field sensor may be a Hall effect sensor, search coil, fluxgate, optically pumped, nuclear precession, SQUID, Hall-effect, anisotropic magnetoresistance, giant magnetoresistance, magnetic tunnel junctions, giant magnetoimpedance, magnetostrictive/piezoelectric composites, magnetodiode, magnetotransistor, fiber optic, magnetooptic, and microelectromechanical systems-based magnetic sensors, among others.

In at least one form, the handle assembly **14** and the frame **20** may operably support another drive system referred to herein as a firing drive system **80** that is configured to apply firing motions to corresponding portions of the interchangeable shaft assembly attached thereto. The firing drive system may **80** also be referred to herein as a "second drive system". The firing drive system **80** may employ an electric motor **82**, located in the pistol grip portion **19** of the handle assembly **14**. In various forms, the motor **82** may be a DC brushed driving motor having a maximum rotation of, approximately, 25,000 RPM, for example. In other arrangements, the motor may include a brushless motor, a cordless motor, a synchronous motor, a stepper motor, or any other suitable electric motor. The motor **82** may be powered by a power source **90** that in one form may comprise a removable power pack **92**. As shown in FIG. **4**, for example, the power pack **92** may comprise a proximal housing portion **94** that is configured for attachment to a distal housing portion **96**. The proximal housing portion **94** and the distal housing portion **96** are configured to operably support a plurality of batteries **98** therein. Batteries **98** may each comprise, for example, a Lithium Ion ("LI") or other suitable battery. The distal housing portion **96** is configured for removable operable

attachment to a control circuit board assembly **100** which is also operably coupled to the motor **82**. A number of batteries **98** may be connected in series may be used as the power source for the surgical instrument **10**. In addition, the power source **90** may be replaceable and/or rechargeable.

As outlined above with respect to other various forms, the electric motor **82** can include a rotatable shaft (not shown) that operably interfaces with a gear reducer assembly **84** that is mounted in meshing engagement with a with a set, or rack, of drive teeth **122** on a longitudinally-movable drive member **120**. In use, a voltage polarity provided by the power source **90** can operate the electric motor **82** in a clockwise direction wherein the voltage polarity applied to the electric motor by the battery can be reversed in order to operate the electric motor **82** in a counter-clockwise direction. When the electric motor **82** is rotated in one direction, the drive member **120** will be axially driven in the distal direction "DD". When the motor **82** is driven in the opposite rotary direction, the drive member **120** will be axially driven in a proximal direction "PD". The handle assembly **14** can include a switch which can be configured to reverse the polarity applied to the electric motor **82** by the power source **90**. As with the other forms described herein, the handle assembly **14** can also include a sensor that is configured to detect the position of the drive member **120** and/or the direction in which the drive member **120** is being moved.

Actuation of the motor **82** can be controlled by a firing trigger **130** that is pivotally supported on the handle assembly **14**. The firing trigger **130** may be pivoted between an unactuated position and an actuated position. The firing trigger **130** may be biased into the unactuated position by a spring **132** or other biasing arrangement such that when the clinician releases the firing trigger **130**, it may be pivoted or otherwise returned to the unactuated position by the spring **132** or biasing arrangement. In at least one form, the firing trigger **130** can be positioned "outboard" of the closure trigger **32** as was discussed above. In at least one form, a firing trigger safety button **134** may be pivotally mounted to the closure trigger **32** by pin **35**. The safety button **134** may be positioned between the firing trigger **130** and the closure trigger **32** and have a pivot arm **136** protruding therefrom. See FIG. **4**. When the closure trigger **32** is in the unactuated position, the safety button **134** is contained in the handle assembly **14** where the clinician cannot readily access it and move it between a safety position preventing actuation of the firing trigger **130** and a firing position wherein the firing trigger **130** may be fired. As the clinician depresses the closure trigger **32**, the safety button **134** and the firing trigger **130** pivot down wherein they can then be manipulated by the clinician.

As discussed above, the handle assembly **14** can include a closure trigger **32** and a firing trigger **130**. Referring to FIGS. **14-18**A, the firing trigger **130** can be pivotably mounted to the closure trigger **32**. The closure trigger **32** can include an arm **31** extending therefrom and the firing trigger **130** can be pivotably mounted to the arm **31** about a pivot pin **33**. When the closure trigger **32** is moved from its unactuated position (FIG. **14**) to its actuated position (FIG. **17**), the firing trigger **130** can descend downwardly, as outlined above. After the safety button **134** has been moved to its firing position, referring primarily to FIG. **18**A, the firing trigger **130** can be depressed to operate the motor of the surgical instrument firing system. In various instances, the handle assembly **14** can include a tracking system, such as system **800**, for example, configured to determine the position of the closure trigger **32** and/or the position of the firing trigger **130**. With primary reference to FIGS. **14**, **17**, and **18**A, the tracking system **800** can include a magnetic element, such as permanent magnet **802**, for example, which is mounted to an arm **801** extending from the firing trigger **130**. The tracking system **800** can comprise one or more sensors, such as a first magnetic field sensor **803** and a second magnetic field sensor **804**, for example, which can be configured to track the position of the magnet **802**.

Upon comparing FIGS. **14** and **17**, the reader will appreciate that, when the closure trigger **32** is moved from its unactuated position to its actuated position, the magnet **802** can move between a first position adjacent the first magnetic field sensor **803** and a second position adjacent the second magnetic field sensor **804**.

Upon comparing FIGS. **17** and **18**A, the reader will further appreciate that, when the firing trigger **130** is moved from an unfired position (FIG. **17**) to a fired position (FIG. **18**A), the magnet **802** can move relative to the second magnetic field sensor **804**. The sensors **803** and **804** can track the movement of the magnet **802** and can be in signal communication with a microcontroller on the circuit board **100**. With data from the first sensor **803** and/or the second sensor **804**, the microcontroller can determine the position of the magnet **802** along a predefined path and, based on that position, the microcontroller can determine whether the closure trigger **32** is in its unactuated position, its actuated position, or a position therebetween. Similarly, with data from the first sensor **803** and/or the second sensor **804**, the microcontroller can determine the position of the magnet **802** along a predefined path and, based on that position, the microcontroller can determine whether the firing trigger **130** is in its unfired position, its fully fired position, or a position therebetween.

As indicated above, in at least one form, the longitudinally movable drive member **120** has a rack of teeth **122** formed thereon for meshing engagement with a corresponding drive gear **86** of the gear reducer assembly **84**. At least one form also includes a manually-actuatable "bailout" assembly **140** that is configured to enable the clinician to manually retract the longitudinally movable drive member **120** should the motor **82** become disabled. The bailout assembly **140** may include a lever or bailout handle assembly **14** that is configured to be manually pivoted into ratcheting engagement with teeth **124** also provided in the drive member **120**. Thus, the clinician can manually retract the drive member **120** by using the bailout handle assembly **14** to ratchet the drive member **120** in the proximal direction "PD". U.S. Patent Application Publication No. US 2010/0089970, now U.S. Pat. No. 8,608,045 discloses bailout arrangements and other components, arrangements and systems that also may be employed with the various instruments disclosed herein. U.S. patent application Ser. No. 12/249,117, entitled POWERED SURGICAL CUTTING AND STAPLING APPARATUS WITH MANUALLY RETRACTABLE FIRING SYSTEM, U.S. Patent Application Publication No. 2010/0089970, now U.S. Pat. No. 8,608,045, is hereby incorporated by reference in its entirety.

Turning now to FIGS. **1** and **7**, the interchangeable shaft assembly **200** includes a surgical end effector **300** that comprises an elongated channel **302** that is configured to operably support a staple cartridge **304** therein. The end effector **300** may further include an anvil **306** that is pivotally supported relative to the elongated channel **302**. The interchangeable shaft assembly **200** may further include an articulation joint **270** and an articulation lock **350** (FIG. **8**) which can be configured to releasably hold the end effector **300** in a desired position relative to a shaft axis SA-SA. Details regarding the construction and operation of the end

effector **300**, the articulation joint **270** and the articulation lock **350** are set forth in U.S. patent application Ser. No. 13/803,086, filed Mar. 14, 2013, entitled ARTICULATABLE SURGICAL INSTRUMENT COMPRISING AN ARTICULATION LOCK, now U.S. Patent Application Publication No. 2014/0263541. The entire disclosure of U.S. patent application Ser. No. 13/803,086, filed Mar. 14, 2013, entitled ARTICULATABLE SURGICAL INSTRUMENT COMPRISING AN ARTICULATION LOCK, now U.S. Patent Application Publication No. 2014/0263541, is hereby incorporated by reference herein. As shown in FIGS. **7** and **8**, the interchangeable shaft assembly **200** can further include a proximal housing or nozzle **201** comprised of nozzle portions **202** and **203**. The interchangeable shaft assembly **200** can further include a closure tube **260** which can be utilized to close and/or open the anvil **306** of the end effector **300**. Primarily referring now to FIGS. **8** and **9**, the shaft assembly **200** can include a spine **210** which can be configured to fixably support a shaft frame portion **212** of the articulation lock **350**. See FIG. **8**. The spine **210** can be configured to, one, slidably support a firing member **220** therein and, two, slidably support the closure tube **260** which extends around the spine **210**. The spine **210** can also be configured to slidably support a proximal articulation driver **230**. The articulation driver **230** has a distal end **231** that is configured to operably engage the articulation lock **350**. The articulation lock **350** interfaces with an articulation frame **352** that is adapted to operably engage a drive pin (not shown) on the end effector frame (not shown). As indicated above, further details regarding the operation of the articulation lock **350** and the articulation frame may be found in U.S. patent application Ser. No. 13/803,086, now U.S. Patent Application Publication No. 2014/0263541. In various circumstances, the spine **210** can comprise a proximal end **211** which is rotatably supported in a chassis **240**. In one arrangement, for example, the proximal end **211** of the spine **210** has a thread **214** formed thereon for threaded attachment to a spine bearing **216** configured to be supported within the chassis **240**. See FIG. **7**. Such an arrangement facilitates rotatable attachment of the spine **210** to the chassis **240** such that the spine **210** may be selectively rotated about a shaft axis SA-SA relative to the chassis **240**.

Referring primarily to FIG. **7**, the interchangeable shaft assembly **200** includes a closure shuttle **250** that is slidably supported within the chassis **240** such that it may be axially moved relative thereto. As shown in FIGS. **3** and **7**, the closure shuttle **250** includes a pair of proximally-protruding hooks **252** that are configured for attachment to the attachment pin **37** that is attached to the second closure link **38** as will be discussed in further detail below. A proximal end **261** of the closure tube **260** is coupled to the closure shuttle **250** for relative rotation thereto. For example, a U shaped connector **263** is inserted into an annular slot **262** in the proximal end **261** of the closure tube **260** and is retained within vertical slots **253** in the closure shuttle **250**. See FIG. **7**. Such an arrangement serves to attach the closure tube **260** to the closure shuttle **250** for axial travel therewith while enabling the closure tube **260** to rotate relative to the closure shuttle **250** about the shaft axis SA-SA. A closure spring **268** is journaled on the closure tube **260** and serves to bias the closure tube **260** in the proximal direction "PD" which can serve to pivot the closure trigger into the unactuated position when the shaft assembly is operably coupled to the handle assembly **14**.

In at least one form, the interchangeable shaft assembly **200** may further include an articulation joint **270**. Other interchangeable shaft assemblies, however, may not be capable of articulation. As shown in FIG. **7**, for example, the articulation joint **270** includes a double pivot closure sleeve assembly **271**. According to various forms, the double pivot closure sleeve assembly **271** includes an end effector closure sleeve assembly **272** having upper and lower distally projecting tangs **273**, **274**. An end effector closure sleeve assembly **272** includes a horseshoe aperture **275** and a tab **276** for engaging an opening tab on the anvil **306** in the various manners described in U.S. patent application Ser. No. 13/803,086, filed Mar. 14, 2013, entitled ARTICULATABLE SURGICAL INSTRUMENT COMPRISING AN ARTICULATION LOCK, now U.S. Patent Application Publication No. 2014/0263541, which has been incorporated by reference herein. As described in further detail therein, the horseshoe aperture **275** and tab **276** engage a tab on the anvil when the anvil **306** is opened. An upper double pivot link **277** includes upwardly projecting distal and proximal pivot pins that engage respectively an upper distal pin hole in the upper proximally projecting tang **273** and an upper proximal pin hole in an upper distally projecting tang **264** on the closure tube **260**. A lower double pivot link **278** includes upwardly projecting distal and proximal pivot pins that engage respectively a lower distal pin hole in the lower proximally projecting tang **274** and a lower proximal pin hole in the lower distally projecting tang **265**. See also FIG. **8**.

In use, the closure tube **260** is translated distally (direction "DD") to close the anvil **306**, for example, in response to the actuation of the closure trigger **32**. The anvil **306** is closed by distally translating the closure tube **260** and thus the shaft closure sleeve assembly **272**, causing it to strike a proximal surface on the anvil **360** in the manner described in the aforementioned reference U.S. patent application Ser. No. 13/803,086, now U.S. Patent Application Publication No. 2014/0263541. As was also described in detail in that reference, the anvil **306** is opened by proximally translating the closure tube **260** and the shaft closure sleeve assembly **272**, causing tab **276** and the horseshoe aperture **275** to contact and push against the anvil tab to lift the anvil **306**. In the anvil-open position, the shaft closure tube **260** is moved to its proximal position.

As indicated above, the surgical instrument **10** may further include an articulation lock **350** of the types and construction described in further detail in U.S. patent application Ser. No. 13/803,086, now U.S. Patent Application Publication No. 2014/0263541, which can be configured and operated to selectively lock the end effector **300** in position. Such arrangement enables the end effector **300** to be rotated, or articulated, relative to the shaft closure tube **260** when the articulation lock **350** is in its unlocked state. In such an unlocked state, the end effector **300** can be positioned and pushed against soft tissue and/or bone, for example, surrounding the surgical site within the patient in order to cause the end effector **300** to articulate relative to the closure tube **260**. The end effector **300** also may be articulated relative to the closure tube **260** by an articulation driver **230**.

As was also indicated above, the interchangeable shaft assembly **200** further includes a firing member **220** that is supported for axial travel within the shaft spine **210**. The firing member **220** includes an intermediate firing shaft portion **222** that is configured for attachment to a distal cutting portion or knife bar **280**. The firing member **220** also may be referred to herein as a "second shaft" and/or a "second shaft assembly". As shown in FIGS. **8** and **9**, the intermediate firing shaft portion **222** may include a longitudinal slot **223** in the distal end thereof which can be configured to receive a tab **284** on the proximal end **282** of

the distal knife bar **280**. The longitudinal slot **223** and the proximal end **282** can be sized and configured to permit relative movement therebetween and can comprise a slip joint **286**. The slip joint **286** can permit the intermediate firing shaft portion **222** of the firing drive **220** to be moved to articulate the end effector **300** without moving, or at least substantially moving, the knife bar **280**. Once the end effector **300** has been suitably oriented, the intermediate firing shaft portion **222** can be advanced distally until a proximal sidewall of the longitudinal slot **223** comes into contact with the tab **284** in order to advance the knife bar **280** and fire the staple cartridge positioned within the channel **302** As can be further seen in FIGS. **8** and **9**, the shaft spine **210** has an elongate opening or window **213** therein to facilitate assembly and insertion of the intermediate firing shaft portion **222** into the shaft frame **210**. Once the intermediate firing shaft portion **222** has been inserted therein, a top frame segment **215** may be engaged with the shaft frame **212** to enclose the intermediate firing shaft portion **222** and knife bar **280** therein. Further description of the operation of the firing member **220** may be found in U.S. patent application Ser. No. 13/803,086, now U.S. Patent Application Publication No. 2014/0263541.

Further to the above, the shaft assembly **200** can include a clutch assembly **400** which can be configured to selectively and releasably couple the articulation driver **230** to the firing member **220**. In one form, the clutch assembly **400** includes a lock collar, or sleeve **402**, positioned around the firing member **220** wherein the lock sleeve **402** can be rotated between an engaged position in which the lock sleeve **402** couples the articulation driver **360** to the firing member **220** and a disengaged position in which the articulation driver **360** is not operably coupled to the firing member **200**. When lock sleeve **402** is in its engaged position, distal movement of the firing member **220** can move the articulation driver **360** distally and, correspondingly, proximal movement of the firing member **220** can move the articulation driver **230** proximally. When lock sleeve **402** is in its disengaged position, movement of the firing member **220** is not transmitted to the articulation driver **230** and, as a result, the firing member **220** can move independently of the articulation driver **230**. In various circumstances, the articulation driver **230** can be held in position by the articulation lock **350** when the articulation driver **230** is not being moved in the proximal or distal directions by the firing member **220**.

Referring primarily to FIG. **9**, the lock sleeve **402** can comprise a cylindrical, or an at least substantially cylindrical, body including a longitudinal aperture **403** defined therein configured to receive the firing member **220**. The lock sleeve **402** can comprise diametrically-opposed, inwardly-facing lock protrusions **404** and an outwardly-facing lock member **406**. The lock protrusions **404** can be configured to be selectively engaged with the firing member **220**. More particularly, when the lock sleeve **402** is in its engaged position, the lock protrusions **404** are positioned within a drive notch **224** defined in the firing member **220** such that a distal pushing force and/or a proximal pulling force can be transmitted from the firing member **220** to the lock sleeve **402**. When the lock sleeve **402** is in its engaged position, the second lock member **406** is received within a drive notch **232** defined in the articulation driver **230** such that the distal pushing force and/or the proximal pulling force applied to the lock sleeve **402** can be transmitted to the articulation driver **230**. In effect, the firing member **220**, the lock sleeve **402**, and the articulation driver **230** will move together when the lock sleeve **402** is in its engaged position. On the other hand, when the lock sleeve **402** is in its disengaged position, the lock protrusions **404** may not be positioned within the drive notch **224** of the firing member **220** and, as a result, a distal pushing force and/or a proximal pulling force may not be transmitted from the firing member **220** to the lock sleeve **402**. Correspondingly, the distal pushing force and/or the proximal pulling force may not be transmitted to the articulation driver **230**. In such circumstances, the firing member **220** can be slid proximally and/or distally relative to the lock sleeve **402** and the proximal articulation driver **230**.

As shown in FIGS. **8-12**, the shaft assembly **200** further includes a switch drum **500** that is rotatably received on the closure tube **260**. The switch drum **500** comprises a hollow shaft segment **502** that has a shaft boss **504** formed thereon for receive an outwardly protruding actuation pin **410** therein. In various circumstances, the actuation pin **410** extends through a slot **267** into a longitudinal slot **408** provided in the lock sleeve **402** to facilitate axial movement of the lock sleeve **402** when it is engaged with the articulation driver **230**. A rotary torsion spring **420** is configured to engage the boss **504** on the switch drum **500** and a portion of the nozzle housing **203** as shown in FIG. **10** to apply a biasing force to the switch drum **500**. The switch drum **500** can further comprise at least partially circumferential openings **506** defined therein which, referring to FIGS. **5** and **6**, can be configured to receive circumferential mounts **204**, **205** extending from the nozzle halves **202**, **203** and permit relative rotation, but not translation, between the switch drum **500** and the proximal nozzle **201**. As shown in those Figures, the mounts **204** and **205** also extend through openings **266** in the closure tube **260** to be seated in recesses **211** in the shaft spine **210**. However, rotation of the nozzle **201** to a point where the mounts **204**, **205** reach the end of their respective slots **506** in the switch drum **500** will result in rotation of the switch drum **500** about the shaft axis SA-SA. Rotation of the switch drum **500** will ultimately result in the rotation of eth actuation pin **410** and the lock sleeve **402** between its engaged and disengaged positions. Thus, in essence, the nozzle **201** may be employed to operably engage and disengage the articulation drive system with the firing drive system in the various manners described in further detail in U.S. patent application Ser. No. 13/803,086, now U.S. Patent Application Publication No. 2014/0263541.

As also illustrated in FIGS. **8-12**, the shaft assembly **200** can comprise a slip ring assembly **600** which can be configured to conduct electrical power to and/or from the end effector **300** and/or communicate signals to and/or from the end effector **300**, for example. The slip ring assembly **600** can comprise a proximal connector flange **604** mounted to a chassis flange **242** extending from the chassis **240** and a distal connector flange **601** positioned within a slot defined in the shaft housings **202**, **203**. The proximal connector flange **604** can comprise a first face and the distal connector flange **601** can comprise a second face which is positioned adjacent to and movable relative to the first face. The distal connector flange **601** can rotate relative to the proximal connector flange **604** about the shaft axis SA-SA. The proximal connector flange **604** can comprise a plurality of concentric, or at least substantially concentric, conductors **602** defined in the first face thereof. A connector **607** can be mounted on the proximal side of the connector flange **601** and may have a plurality of contacts (not shown) wherein each contact corresponds to and is in electrical contact with one of the conductors **602**. Such an arrangement permits relative rotation between the proximal connector flange **604**

and the distal connector flange **601** while maintaining electrical contact therebetween. The proximal connector flange **604** can include an electrical connector **606** which can place the conductors **602** in signal communication with a shaft circuit board **610** mounted to the shaft chassis **240**, for example. In at least one instance, a wiring harness comprising a plurality of conductors can extend between the electrical connector **606** and the shaft circuit board **610**. The electrical connector **606** may extend proximally through a connector opening **243** defined in the chassis mounting flange **242**. See FIG. **7**. U.S. patent application Ser. No. 13/800,067, entitled STAPLE CARTRIDGE TISSUE THICKNESS SENSOR SYSTEM, filed on Mar. 13, 2013, now U.S. Patent Application Publication No. 2014/0263552, is incorporated by reference in its entirety. U.S. patent application Ser. No. 13/800,025, entitled STAPLE CARTRIDGE TISSUE THICKNESS SENSOR SYSTEM, filed on Mar. 13, 2013, now U.S. Patent Application Publication No. 2014/0263551, is incorporated by reference in its entirety. Further details regarding slip ring assembly **600** may be found in U.S. patent application Ser. No. 13/803,086, now U.S. Patent Application Publication No. 2014/0263541.

As discussed above, the shaft assembly **200** can include a proximal portion which is fixably mounted to the handle assembly **14** and a distal portion which is rotatable about a longitudinal axis. The rotatable distal shaft portion can be rotated relative to the proximal portion about the slip ring assembly **600**, as discussed above. The distal connector flange **601** of the slip ring assembly **600** can be positioned within the rotatable distal shaft portion. Moreover, further to the above, the switch drum **500** can also be positioned within the rotatable distal shaft portion. When the rotatable distal shaft portion is rotated, the distal connector flange **601** and the switch drum **500** can be rotated synchronously with one another. In addition, the switch drum **500** can be rotated between a first position and a second position relative to the distal connector flange **601**. When the switch drum **500** is in its first position, the articulation drive system may be operably disengaged from the firing drive system and, thus, the operation of the firing drive system may not articulate the end effector **300** of the shaft assembly **200**. When the switch drum **500** is in its second position, the articulation drive system may be operably engaged with the firing drive system and, thus, the operation of the firing drive system may articulate the end effector **300** of the shaft assembly **200**. When the switch drum **500** is moved between its first position and its second position, the switch drum **500** is moved relative to distal connector flange **601**. In various instances, the shaft assembly **200** can comprise at least one sensor configured to detect the position of the switch drum **500**. Turning now to FIGS. **11** and **12**, the distal connector flange **601** can comprise a magnetic field sensor **605**, for example, and the switch drum **500** can comprise a magnetic element, such as permanent magnet **505**, for example. The magnetic field sensor **605** can be configured to detect the position of the permanent magnet **505**. When the switch drum **500** is rotated between its first position and its second position, the permanent magnet **505** can move relative to the magnetic field sensor **605**. In various instances, magnetic field sensor **605** can detect changes in a magnetic field created when the permanent magnet **505** is moved. The magnetic field sensor **605** can be in signal communication with the shaft circuit board **610** and/or the handle circuit board **100**, for example. Based on the signal from the magnetic field sensor **605**, a microcontroller on the shaft circuit board **610** and/or the handle circuit board **100** can determine whether the articulation drive system is engaged with or disengaged from the firing drive system.

Referring again to FIGS. **3** and **7**, the chassis **240** includes at least one, and preferably two, tapered attachment portions **244** formed thereon that are adapted to be received within corresponding dovetail slots **702** formed within a distal attachment flange portion **700** of the frame **20**. Each dovetail slot **702** may be tapered or, stated another way, be somewhat V-shaped to seatingly receive the attachment portions **244** therein. As can be further seen in FIGS. **3** and **7**, a shaft attachment lug **226** is formed on the proximal end of the intermediate firing shaft **222**. As will be discussed in further detail below, when the interchangeable shaft assembly **200** is coupled to the handle assembly **14**, the shaft attachment lug **226** is received in a firing shaft attachment cradle **126** formed in the distal end **125** of the longitudinal drive member **120** as shown in FIGS. **3** and **6**, for example.

Various shaft assemblies employ a latch system **710** for removably coupling the shaft assembly **200** to the housing **12** and more specifically to the frame **20**. As shown in FIG. **7**, for example, in at least one form, the latch system **710** includes a lock member or lock yoke **712** that is movably coupled to the chassis **240**. In the illustrated example, for example, the lock yoke **712** has a U-shape with two spaced downwardly extending legs **714**. The legs **714** each have a pivot lug **716** formed thereon that are adapted to be received in corresponding holes **245** formed in the chassis **240**. Such arrangement facilitates pivotal attachment of the lock yoke **712** to the chassis **240**. The lock yoke **712** may include two proximally protruding lock lugs **714** that are configured for releasable engagement with corresponding lock detents or grooves **704** in the distal attachment flange **700** of the frame **20**. See FIG. **3**. In various forms, the lock yoke **712** is biased in the proximal direction by spring or biasing member (not shown). Actuation of the lock yoke **712** may be accomplished by a latch button **722** that is slidably mounted on a latch actuator assembly **720** that is mounted to the chassis **240**. The latch button **722** may be biased in a proximal direction relative to the lock yoke **712**. As will be discussed in further detail below, the lock yoke **712** may be moved to an unlocked position by biasing the latch button the in distal direction which also causes the lock yoke **712** to pivot out of retaining engagement with the distal attachment flange **700** of the frame **20**. When the lock yoke **712** is in "retaining engagement" with the distal attachment flange **700** of the frame **20**, the lock lugs **716** are retainingly seated within the corresponding lock detents or grooves **704** in the distal attachment flange **700**.

When employing an interchangeable shaft assembly that includes an end effector of the type described herein that is adapted to cut and fasten tissue, as well as other types of end effectors, it may be desirable to prevent inadvertent detachment of the interchangeable shaft assembly from the housing during actuation of the end effector. For example, in use the clinician may actuate the closure trigger **32** to grasp and manipulate the target tissue into a desired position. Once the target tissue is positioned within the end effector **300** in a desired orientation, the clinician may then fully actuate the closure trigger **32** to close the anvil **306** and clamp the target tissue in position for cutting and stapling. In that instance, the first drive system **30** has been fully actuated. After the target tissue has been clamped in the end effector **300**, it may be desirable to prevent the inadvertent detachment of the shaft assembly **200** from the housing **12**. One form of the latch system **710** is configured to prevent such inadvertent detachment.

As can be most particularly seen in FIG. **7**, the lock yoke **712** includes at least one and preferably two lock hooks **718** that are adapted to contact corresponding lock lug portions **256** that are formed on the closure shuttle **250**. Referring to FIGS. **13-15**, when the closure shuttle **250** is in an unactuated position (i.e., the first drive system **30** is unactuated and the anvil **306** is open), the lock yoke **712** may be pivoted in a distal direction to unlock the interchangeable shaft assembly **200** from the housing **12**. When in that position, the lock hooks **718** do not contact the lock lug portions **256** on the closure shuttle **250**. However, when the closure shuttle **250** is moved to an actuated position (i.e., the first drive system **30** is actuated and the anvil **306** is in the closed position), the lock yoke **712** is prevented from being pivoted to an unlocked position. See FIGS. **16-18**. Stated another way, if the clinician were to attempt to pivot the lock yoke **712** to an unlocked position or, for example, the lock yoke **712** was inadvertently bumped or contacted in a manner that might otherwise cause it to pivot distally, the lock hooks **718** on the lock yoke **712** will contact the lock lugs **256** on the closure shuttle **250** and prevent movement of the lock yoke **712** to an unlocked position.

Attachment of the interchangeable shaft assembly **200** to the handle assembly **14** will now be described with reference to FIG. **3**. To commence the coupling process, the clinician may position the chassis **240** of the interchangeable shaft assembly **200** above or adjacent to the distal attachment flange **700** of the frame **20** such that the tapered attachment portions **244** formed on the chassis **240** are aligned with the dovetail slots **702** in the frame **20**. The clinician may then move the shaft assembly **200** along an installation axis IA that is perpendicular to the shaft axis SA-SA to seat the attachment portions **244** in "operable engagement" with the corresponding dovetail receiving slots **702**. In doing so, the shaft attachment lug **226** on the intermediate firing shaft **222** will also be seated in the cradle **126** in the longitudinally movable drive member **120** and the portions of pin **37** on the second closure link **38** will be seated in the corresponding hooks **252** in the closure yoke **250**. As used herein, the term "operable engagement" in the context of two components means that the two components are sufficiently engaged with each other so that upon application of an actuation motion thereto, the components may carry out their intended action, function and/or procedure.

As discussed above, at least five systems of the interchangeable shaft assembly **200** can be operably coupled with at least five corresponding systems of the handle assembly **14**. A first system can comprise a frame system which couples and/or aligns the frame or spine of the shaft assembly **200** with the frame **20** of the handle assembly **14**. Another system can comprise a closure drive system **30** which can operably connect the closure trigger **32** of the handle assembly **14** and the closure tube **260** and the anvil **306** of the shaft assembly **200**. As outlined above, the closure tube attachment yoke **250** of the shaft assembly **200** can be engaged with the pin **37** on the second closure link **38**. Another system can comprise the firing drive system **80** which can operably connect the firing trigger **130** of the handle assembly **14** with the intermediate firing shaft **222** of the shaft assembly **200**.

As outlined above, the shaft attachment lug **226** can be operably connected with the cradle **126** of the longitudinal drive member **120**. Another system can comprise an electrical system which can signal to a controller in the handle assembly **14**, such as microcontroller, for example, that a shaft assembly, such as shaft assembly **200**, for example, has been operably engaged with the handle assembly **14** and/or, two, conduct power and/or communication signals between the shaft assembly **200** and the handle assembly **14**. For instance, the shaft assembly **200** can include an electrical connector **1410** that is operably mounted to the shaft circuit board **610**. The electrical connector **1410** is configured for mating engagement with a corresponding electrical connector **1400** on the handle control board **100**. Further details regaining the circuitry and control systems may be found in U.S. patent application Ser. No. 13/803,086, the entire disclosure of which was previously incorporated by reference herein. The fifth system may consist of the latching system for releasably locking the shaft assembly **200** to the handle assembly **14**.

Referring again to FIGS. **2** and **3**, the handle assembly **14** can include an electrical connector **1400** comprising a plurality of electrical contacts. Turning now to FIG. **19**, the electrical connector **1400** can comprise a first contact **1401***a*, a second contact **1401***b*, a third contact **1401***c*, a fourth contact **1401***d*, a fifth contact **1401***e*, and a sixth contact **1401***f*, for example. While the illustrated example utilizes six contacts, other examples are envisioned which may utilize more than six contacts or less than six contacts.

As illustrated in FIG. **19**, the first contact **1401***a* can be in electrical communication with a transistor **1408**, contacts **1401***b*-**1401***e* can be in electrical communication with a microcontroller **1500**, and the sixth contact **1401***f* can be in electrical communication with a ground. In certain circumstances, one or more of the electrical contacts **1401***b*-**1401***e* may be in electrical communication with one or more output channels of the microcontroller **1500** and can be energized, or have a voltage potential applied thereto, when the handle **1042** is in a powered state. In some circumstances, one or more of the electrical contacts **1401***b*-**1401***e* may be in electrical communication with one or more input channels of the microcontroller **1500** and, when the handle assembly **14** is in a powered state, the microcontroller **1500** can be configured to detect when a voltage potential is applied to such electrical contacts. When a shaft assembly, such as shaft assembly **200**, for example, is assembled to the handle assembly **14**, the electrical contacts **1401***a*-**1401***f* may not communicate with each other. When a shaft assembly is not assembled to the handle assembly **14**, however, the electrical contacts **1401***a*-**1401***f* of the electrical connector **1400** may be exposed and, in some circumstances, one or more of the contacts **1401***a*-**1401***f* may be accidentally placed in electrical communication with each other. Such circumstances can arise when one or more of the contacts **1401***a*-**1401***f* come into contact with an electrically conductive material, for example. When this occurs, the microcontroller **1500** can receive an erroneous input and/or the shaft assembly **200** can receive an erroneous output, for example. To address this issue, in various circumstances, the handle assembly **14** may be unpowered when a shaft assembly, such as shaft assembly **200**, for example, is not attached to the handle assembly **14**.

In other circumstances, the handle **1042** can be powered when a shaft assembly, such as shaft assembly **200**, for example, is not attached thereto. In such circumstances, the microcontroller **1500** can be configured to ignore inputs, or voltage potentials, applied to the contacts in electrical communication with the microcontroller **1500**, i.e., contacts **1401***b*-**1401***e*, for example, until a shaft assembly is attached to the handle assembly **14**. Even though the microcontroller **1500** may be supplied with power to operate other functionalities of the handle assembly **14** in such circumstances, the handle assembly **14** may be in a powered-down state. In a way, the electrical connector **1400** may be in a powered-down state as voltage potentials applied to the electrical

contacts **1401***b*-**1401***e* may not affect the operation of the handle assembly **14**. The reader will appreciate that, even though contacts **1401***b*-**1401***e* may be in a powered-down state, the electrical contacts **1401***a* and **1401***f*, which are not in electrical communication with the microcontroller **1500**, may or may not be in a powered-down state. For instance, sixth contact **1401***f* may remain in electrical communication with a ground regardless of whether the handle assembly **14** is in a powered-up or a powered-down state.

Furthermore, the transistor **1408**, and/or any other suitable arrangement of transistors, such as transistor **1410**, for example, and/or switches may be configured to control the supply of power from a power source **1404**, such as a battery **90** within the handle assembly **14**, for example, to the first electrical contact **1401***a* regardless of whether the handle assembly **14** is in a powered-up or a powered-down state. In various circumstances, the shaft assembly **200**, for example, can be configured to change the state of the transistor **1408** when the shaft assembly **200** is engaged with the handle assembly **14**. In certain circumstances, further to the below, a magnetic field sensor **1402** can be configured to switch the state of transistor **1410** which, as a result, can switch the state of transistor **1408** and ultimately supply power from power source **1404** to first contact **1401***a*. In this way, both the power circuits and the signal circuits to the connector **1400** can be powered down when a shaft assembly is not installed to the handle assembly **14** and powered up when a shaft assembly is installed to the handle assembly **14**.

In various circumstances, referring again to FIG. **19**, the handle assembly **14** can include the magnetic field sensor **1402**, for example, which can be configured to detect a detectable element, such as a magnetic element **1407** (FIG. **3**), for example, on a shaft assembly, such as shaft assembly **200**, for example, when the shaft assembly is coupled to the handle assembly **14**. The magnetic field sensor **1402** can be powered by a power source **1406**, such as a battery, for example, which can, in effect, amplify the detection signal of the magnetic field sensor **1402** and communicate with an input channel of the microcontroller **1500** via the circuit illustrated in FIG. **19**. Once the microcontroller **1500** has a received an input indicating that a shaft assembly has been at least partially coupled to the handle assembly **14**, and that, as a result, the electrical contacts **1401***a*-**1401***f* are no longer exposed, the microcontroller **1500** can enter into its normal, or powered-up, operating state. In such an operating state, the microcontroller **1500** will evaluate the signals transmitted to one or more of the contacts **1401***b*-**1401***e* from the shaft assembly and/or transmit signals to the shaft assembly through one or more of the contacts **1401***b*-**1401***e* in normal use thereof. In various circumstances, the shaft assembly **200** may have to be fully seated before the magnetic field sensor **1402** can detect the magnetic element **1407**. While a magnetic field sensor **1402** can be utilized to detect the presence of the shaft assembly **200**, any suitable system of sensors and/or switches can be utilized to detect whether a shaft assembly has been assembled to the handle assembly **14**, for example. In this way, further to the above, both the power circuits and the signal circuits to the connector **1400** can be powered down when a shaft assembly is not installed to the handle assembly **14** and powered up when a shaft assembly is installed to the handle assembly **14**.

In various examples, as may be used throughout the present disclosure, any suitable magnetic field sensor may be employed to detect whether a shaft assembly has been assembled to the handle assembly **14**, for example. For example, the technologies used for magnetic field sensing include Hall effect sensor, search coil, fluxgate, optically pumped, nuclear precession, SQUID, Hall-effect, anisotropic magnetoresistance, giant magnetoresistance, magnetic tunnel junctions, giant magnetoimpedance, magnetostrictive/piezoelectric composites, magnetodiode, magnetotransistor, fiber optic, magnetooptic, and microelectromechanical systems-based magnetic sensors, among others.

Referring to FIG. **19**, the microcontroller **1500** may generally comprise a microprocessor ("processor") and one or more memory units operationally coupled to the processor. By executing instruction code stored in the memory, the processor may control various components of the surgical instrument, such as the motor, various drive systems, and/or a user display, for example. The microcontroller **1500** may be implemented using integrated and/or discrete hardware elements, software elements, and/or a combination of both. Examples of integrated hardware elements may include processors, microprocessors, microcontrollers, integrated circuits, application specific integrated circuits (ASIC), programmable logic devices (PLD), digital signal processors (DSP), field programmable gate arrays (FPGA), logic gates, registers, semiconductor devices, chips, microchips, chip sets, microcontrollers, system-on-chip (SoC), and/or system-in-package (SIP). Examples of discrete hardware elements may include circuits and/or circuit elements such as logic gates, field effect transistors, bipolar transistors, resistors, capacitors, inductors, and/or relays. In certain instances, the microcontroller **1500** may include a hybrid circuit comprising discrete and integrated circuit elements or components on one or more substrates, for example.

Referring to FIG. **19**, the microcontroller **1500** may be an LM 4F230H5QR, available from Texas Instruments, for example. In certain instances, the Texas Instruments LM4F230H5QR is an ARM Cortex-M4F Processor Core comprising on-chip memory of 256 KB single-cycle flash memory, or other non-volatile memory, up to 40 MHz, a prefetch buffer to improve performance above 40 MHz, a 32 KB single-cycle serial random access memory (SRAM), internal read-only memory (ROM) loaded with StellarisWare® software, 2 KB electrically erasable programmable read-only memory (EEPROM), one or more pulse width modulation (PWM) modules, one or more quadrature encoder inputs (QEI) analog, one or more 12-bit Analog-to-Digital Converters (ADC) with 12 analog input channels, among other features that are readily available. Other microcontrollers may be readily substituted for use with the present disclosure. Accordingly, the present disclosure should not be limited in this context.

As discussed above, the handle assembly **14** and/or the shaft assembly **200** can include systems and configurations configured to prevent, or at least reduce the possibility of, the contacts of the handle electrical connector **1400** and/or the contacts of the shaft electrical connector **1410** from becoming shorted out when the shaft assembly **200** is not assembled, or completely assembled, to the handle assembly **14**. Referring to FIG. **3**, the handle electrical connector **1400** can be at least partially recessed within a cavity **1409** defined in the handle frame **20**. The six contacts **1401***a*-**1401***f* of the electrical connector **1400** can be completely recessed within the cavity **1409**. Such arrangements can reduce the possibility of an object accidentally contacting one or more of the contacts **1401***a*-**1401***f*. Similarly, the shaft electrical connector **1410** can be positioned within a recess defined in the shaft chassis **240** which can reduce the possibility of an object accidentally contacting one or more of the contacts **1411***a*-**1411***f* of the shaft electrical connector **1410**. With regard to the particular example depicted in FIG. **3**, the shaft contacts **1411***a*-**1411***f* can comprise male contacts. In at least

one example, each shaft contact **1411***a*-**1411***f* can comprise a flexible projection extending therefrom which can be configured to engage a corresponding handle contact **1401***a*-**1401***f*, for example. The handle contacts **1401***a*-**1401***f* can comprise female contacts. In at least one example, each handle contact **1401***a*-**1401***f* can comprise a flat surface, for example, against which the male shaft contacts **1401***a*-**1401***f* can wipe, or slide, against and maintain an electrically conductive interface therebetween. In various instances, the direction in which the shaft assembly **200** is assembled to the handle assembly **14** can be parallel to, or at least substantially parallel to, the handle contacts **1401***a*-**1401***f* such that the shaft contacts **1411***a*-**1411***f* slide against the handle contacts **1401***a*-**1401***f* when the shaft assembly **200** is assembled to the handle assembly **14**. In various alternative examples, the handle contacts **1401***a*-**1401***f* can comprise male contacts and the shaft contacts **1411***a*-**1411***f* can comprise female contacts. In certain alternative examples, the handle contacts **1401***a*-**1401***f* and the shaft contacts **1411***a*-**1411***f* can comprise any suitable arrangement of contacts.

In various instances, the handle assembly **14** can comprise a connector guard configured to at least partially cover the handle electrical connector **1400** and/or a connector guard configured to at least partially cover the shaft electrical connector **1410**. A connector guard can prevent, or at least reduce the possibility of, an object accidentally touching the contacts of an electrical connector when the shaft assembly is not assembled to, or only partially assembled to, the handle. A connector guard can be movable. For instance, the connector guard can be moved between a guarded position in which it at least partially guards a connector and an unguarded position in which it does not guard, or at least guards less of, the connector. In at least one example, a connector guard can be displaced as the shaft assembly is being assembled to the handle. For instance, if the handle comprises a handle connector guard, the shaft assembly can contact and displace the handle connector guard as the shaft assembly is being assembled to the handle. Similarly, if the shaft assembly comprises a shaft connector guard, the handle can contact and displace the shaft connector guard as the shaft assembly is being assembled to the handle. In various instances, a connector guard can comprise a door, for example. In at least one instance, the door can comprise a beveled surface which, when contacted by the handle or shaft, can facilitate the displacement of the door in a certain direction. In various instances, the connector guard can be translated and/or rotated, for example. In certain instances, a connector guard can comprise at least one film which covers the contacts of an electrical connector. When the shaft assembly is assembled to the handle, the film can become ruptured. In at least one instance, the male contacts of a connector can penetrate the film before engaging the corresponding contacts positioned underneath the film.

As described above, the surgical instrument can include a system which can selectively power-up, or activate, the contacts of an electrical connector, such as the electrical connector **1400**, for example. In various instances, the contacts can be transitioned between an unactivated condition and an activated condition. In certain instances, the contacts can be transitioned between a monitored condition, a deactivated condition, and an activated condition. For instance, the microcontroller **1500**, for example, can monitor the contacts **1401***a*-**1401***f* when a shaft assembly has not been assembled to the handle assembly **14** to determine whether one or more of the contacts **1401***a*-**1401***f* may have been shorted. The microcontroller **1500** can be configured to apply a low voltage potential to each of the contacts **1401***a*-**1401***f* and assess whether only a minimal resistance is present at each of the contacts. Such an operating state can comprise the monitored condition. In the event that the resistance detected at a contact is high, or above a threshold resistance, the microcontroller **1500** can deactivate that contact, more than one contact, or, alternatively, all of the contacts. Such an operating state can comprise the deactivated condition. If a shaft assembly is assembled to the handle assembly **14** and it is detected by the microcontroller **1500**, as discussed above, the microcontroller **1500** can increase the voltage potential to the contacts **1401***a*-**1401***f*. Such an operating state can comprise the activated condition.

The various shaft assemblies disclosed herein may employ sensors and various other components that require electrical communication with the controller in the housing. These shaft assemblies generally are configured to be able to rotate relative to the housing necessitating a connection that facilitates such electrical communication between two or more components that may rotate relative to each other. When employing end effectors of the types disclosed herein, the connector arrangements must be relatively robust in nature while also being somewhat compact to fit into the shaft assembly connector portion.

Referring to FIG. **20**, a non-limiting form of the end effector **300** is illustrated. As described above, the end effector **300** may include the anvil **306** and the staple cartridge **304**. In this non-limiting example, the anvil **306** is coupled to an elongate channel **198**. For example, apertures **199** can be defined in the elongate channel **198** which can receive pins **152** extending from the anvil **306** and allow the anvil **306** to pivot from an open position to a closed position relative to the elongate channel **198** and staple cartridge **304**. In addition, FIG. **20** shows a firing bar **172**, configured to longitudinally translate into the end effector **300**. The firing bar **172** may be constructed from one solid section, or in various examples, may include a laminate material comprising, for example, a stack of steel plates. A distally projecting end of the firing bar **172** can be attached to an E-beam **178** that can, among other things, assist in spacing the anvil **306** from a staple cartridge **304** positioned in the elongate channel **198** when the anvil **306** is in a closed position. The E-beam **178** can also include a sharpened cutting edge **182** which can be used to sever tissue as the E-beam **178** is advanced distally by the firing bar **172**. In operation, the E-beam **178** can also actuate, or fire, the staple cartridge **304**. The staple cartridge **304** can include a molded cartridge body **194** that holds a plurality of staples **191** resting upon staple drivers **192** within respective upwardly open staple cavities **195**. A wedge sled **190** is driven distally by the E-beam **178**, sliding upon a cartridge tray **196** that holds together the various components of the replaceable staple cartridge **304**. The wedge sled **190** upwardly cams the staple drivers **192** to force out the staples **191** into deforming contact with the anvil **306** while a cutting surface **182** of the E-beam **178** severs clamped tissue.

Further to the above, the E-beam **178** can include upper pins **180** which engage the anvil **306** during firing. The E-beam **178** can further include middle pins **184** and a bottom foot **186** which can engage various portions of the cartridge body **194**, cartridge tray **196** and elongate channel **198**. When a staple cartridge **304** is positioned within the elongate channel **198**, a slot **193** defined in the cartridge body **194** can be aligned with a slot **197** defined in the cartridge tray **196** and a slot **189** defined in the elongate channel **198**. In use, the E-beam **178** can slide through the aligned slots **193**, **197**, and **189** wherein, as indicated in FIG.

20, the bottom foot **186** of the E-beam **178** can engage a groove running along the bottom surface of channel **198** along the length of slot **189**, the middle pins **184** can engage the top surfaces of cartridge tray **196** along the length of longitudinal slot **197**, and the upper pins **180** can engage the anvil **306**. In such circumstances, the E-beam **178** can space, or limit the relative movement between, the anvil **306** and the staple cartridge **304** as the firing bar **172** is moved distally to fire the staples from the staple cartridge **304** and/or incise the tissue captured between the anvil **306** and the staple cartridge **304**. Thereafter, the firing bar **172** and the E-beam **178** can be retracted proximally allowing the anvil **306** to be opened to release the two stapled and severed tissue portions (not shown).

Having described a surgical instrument **10** (FIGS. **1-4**) in general terms, the description now turns to a detailed description of various electrical/electronic components of the surgical instrument **10**. Turning now to FIGS. **21**A-**21**B, where one example of a segmented circuit **2000** comprising a plurality of circuit segments **2002***a*-**2002***g* is illustrated. The segmented circuit **2000** comprising the plurality of circuit segments **2002***a*-**2002***g* is configured to control a powered surgical instrument, such as, for example, the surgical instrument **10** illustrated in FIGS. **1-18**A, without limitation. The plurality of circuit segments **2002***a*-**2002***g* is configured to control one or more operations of the powered surgical instrument **10**. A safety processor segment **2002***a* (Segment 1) comprises a safety processor **2004**. A primary processor segment **2002***b* (Segment 2) comprises a primary processor **2006**. The safety processor **2004** and/or the primary processor **2006** are configured to interact with one or more additional circuit segments **2002***c*-**2002***g* to control operation of the powered surgical instrument **10**. The primary processor **2006** comprises a plurality of inputs coupled to, for example, one or more circuit segments **2002***c*-**2002***g*, a battery **2008**, and/or a plurality of switches **2058***a*-**2070**. The segmented circuit **2000** may be implemented by any suitable circuit, such as, for example, a printed circuit board assembly (PCBA) within the powered surgical instrument **10**. It should be understood that the term processor as used herein includes any microprocessor, microcontroller, or other basic computing device that incorporates the functions of a computer's central processing unit (CPU) on an integrated circuit or at most a few integrated circuits. The processor is a multipurpose, programmable device that accepts digital data as input, processes it according to instructions stored in its memory, and provides results as output. It is an example of sequential digital logic, as it has internal memory. Processors operate on numbers and symbols represented in the binary numeral system.

In one aspect, the main processor **2006** may be any single core or multicore processor such as those known under the trade name ARM Cortex by Texas Instruments. In one example, the safety processor **2004** may be a safety microcontroller platform comprising two microcontroller-based families such as TMS570 and RM4x known under the trade name Hercules ARM Cortex R4, also by Texas Instruments. Nevertheless, other suitable substitutes for microcontrollers and safety processor may be employed, without limitation. In one example, the safety processor **2004** may be configured specifically for IEC 61508 and ISO 26262 safety critical applications, among others, to provide advanced integrated safety features while delivering scalable performance, connectivity, and memory options.

In certain instances, the main processor **2006** may be an LM 4F230H5QR, available from Texas Instruments, for example. In at least one example, the Texas Instruments LM4F230H5QR is an ARM Cortex-M4F Processor Core comprising on-chip memory of 256 KB single-cycle flash memory, or other non-volatile memory, up to 40 MHz, a prefetch buffer to improve performance above 40 MHz, a 32 KB single-cycle SRAM, internal ROM loaded with StellarisWare® software, 2 KB EEPROM, one or more PWM modules, one or more QEI analog, one or more 12-bit ADC with 12 analog input channels, among other features that are readily available for the product datasheet. Other processors may be readily substituted and, accordingly, the present disclosure should not be limited in this context.

In one aspect, the segmented circuit **2000** comprises an acceleration segment **2002***c* (Segment 3). The acceleration segment **2002***c* comprises an acceleration sensor **2022**. The acceleration sensor **2022** may comprise, for example, an accelerometer. The acceleration sensor **2022** is configured to detect movement or acceleration of the powered surgical instrument **10**. In some examples, input from the acceleration sensor **2022** is used, for example, to transition to and from a sleep mode, identify an orientation of the powered surgical instrument, and/or identify when the surgical instrument has been dropped. In some examples, the acceleration segment **2002***c* is coupled to the safety processor **2004** and/or the primary processor **2006**.

In one aspect, the segmented circuit **2000** comprises a display segment **2002***d* (Segment 4). The display segment **2002***d* comprises a display connector **2024** coupled to the primary processor **2006**. The display connector **2024** couples the primary processor **2006** to a display **2028** through one or more display driver integrated circuits **2026**. The display driver integrated circuits **2026** may be integrated with the display **2028** and/or may be located separately from the display **2028**. The display **2028** may comprise any suitable display, such as, for example, an organic light-emitting diode (OLED) display, a liquid-crystal display (LCD), and/or any other suitable display. In some examples, the display segment **2002***d* is coupled to the safety processor **2004**.

In some aspects, the segmented circuit **2000** comprises a shaft segment **2002***e* (Segment 5). The shaft segment **2002***e* comprises one or more controls for a shaft **2004** coupled to the surgical instrument **10** and/or one or more controls for an end effector **2006** coupled to the shaft **2004**. The shaft segment **2002***e* comprises a shaft connector **2030** configured to couple the primary processor **2006** to a shaft PCBA **2031**. The shaft PCBA **2031** comprises a first articulation switch **2036**, a second articulation switch **2032**, and a shaft PCBA EEPROM **2034**. In some examples, the shaft PCBA EEPROM **2034** comprises one or more parameters, routines, and/or programs specific to the shaft **2004** and/or the shaft PCBA **2031**. The shaft PCBA **2031** may be coupled to the shaft **2004** and/or integral with the surgical instrument **10**. In some examples, the shaft segment **2002***e* comprises a second shaft EEPROM **2038**. The second shaft EEPROM **2038** comprises a plurality of algorithms, routines, parameters, and/or other data corresponding to one or more shafts **2004** and/or end effectors **2006** which may be interfaced with the powered surgical instrument **10**.

In some aspects, the segmented circuit **2000** comprises a position encoder segment **2002***f* (Segment 6). The position encoder segment **2002***f* comprises one or more magnetic rotary position encoders **2040***a*-**2040***b*. The one or more magnetic rotary position encoders **2040***a*-**2040***b* are configured to identify the rotational position of a motor **2048**, a shaft **2004**, and/or an end effector **2006** of the surgical instrument **10**. In some examples, the magnetic rotary posi-

tion encoders **2040***a*-**2040***b* may be coupled to the safety processor **2004** and/or the primary processor **2006**.

In some aspects, the segmented circuit **2000** comprises a motor segment **2002***g* (Segment 7). The motor segment **2002***g* comprises a motor **2048** configured to control one or more movements of the powered surgical instrument **10**. The motor **2048** is coupled to the primary processor **2006** by an H-Bridge driver **2042** and one or more H-bridge field-effect transistors (FETs) **2044**. The H-bridge FETs **2044** are coupled to the safety processor **2004**. A motor current sensor **2046** is coupled in series with the motor **2048** to measure the current draw of the motor **2048**. The motor current sensor **2046** is in signal communication with the primary processor **2006** and/or the safety processor **2004**. In some examples, the motor **2048** is coupled to a motor electromagnetic interference (EMI) filter **2050**.

In some aspects, the segmented circuit **2000** comprises a power segment **2002***h* (Segment 8). A battery **2008** is coupled to the safety processor **2004**, the primary processor **2006**, and one or more of the additional circuit segments **2002***c*-**2002***g*. The battery **2008** is coupled to the segmented circuit **2000** by a battery connector **2010** and a current sensor **2012**. The current sensor **2012** is configured to measure the total current draw of the segmented circuit **2000**. In some examples, one or more voltage converters **2014***a*, **2014***b*, **2016** are configured to provide predetermined voltage values to one or more circuit segments **2002***a*-**2002***g*. For example, in some examples, the segmented circuit **2000** may comprise 3.3V voltage converters **2014***a*-**2014***b* and/or 5V voltage converters **2016**. A boost converter **2018** is configured to provide a boost voltage up to a predetermined amount, such as, for example, up to 13V. The boost converter **2018** is configured to provide additional voltage and/or current during power intensive operations and prevent brownout or low-power conditions.

In some aspects, the safety segment **2002***a* comprises a motor power interrupt **2020**. The motor power interrupt **2020** is coupled between the power segment **2002***h* and the motor segment **2002***g*. The safety segment **2002***a* is configured to interrupt power to the motor segment **2002***g* when an error or fault condition is detected by the safety processor **2004** and/or the primary processor **2006** as discussed in more detail herein. Although the circuit segments **2002***a*-**2002***g* are illustrated with all components of the circuit segments **2002***a*-**2002***h* located in physical proximity, one skilled in the art will recognize that a circuit segment **2002***a*-**2002***h* may comprise components physically and/or electrically separate from other components of the same circuit segment **2002***a*-**2002***g*. In some examples, one or more components may be shared between two or more circuit segments **2002***a*-**2002***g*.

In some aspects, a plurality of switches **2056**-**2070** are coupled to the safety processor **2004** and/or the primary processor **2006**. The plurality of switches **2056**-**2070** may be configured to control one or more operations of the surgical instrument **10**, control one or more operations of the segmented circuit **2000**, and/or indicate a status of the surgical instrument **10**. For example, a bail-out door switch **2056** is configured to indicate the status of a bail-out door. A plurality of articulation switches, such as, for example, a left side articulation left switch **2058***a*, a left side articulation right switch **2060***a*, a left side articulation center switch **2062***a*, a right side articulation left switch **2058***b*, a right side articulation right switch **2060***b*, and a right side articulation center switch **2062***b* are configured to control articulation of a shaft **2004** and/or an end effector **2006**. A left side reverse switch **2064***a* and a right side reverse switch **2064***b* are coupled to the primary processor **2006**. In some examples, the left side switches comprising the left side articulation left switch **2058***a*, the left side articulation right switch **2060***a*, the left side articulation center switch **2062***a*, and the left side reverse switch **2064***a* are coupled to the primary processor **2006** by a left flex connector **2072***a*. The right side switches comprising the right side articulation left switch **2058***b*, the right side articulation right switch **2060***b*, the right side articulation center switch **2062***b*, and the right side reverse switch **2064***b* are coupled to the primary processor **2006** by a right flex connector **2072***b*. In some examples, a firing switch **2066**, a clamp release switch **2068**, and a shaft engaged switch **2070** are coupled to the primary processor **2006**.

In some aspects, the plurality of switches **2056**-**2070** may comprise, for example, a plurality of handle controls mounted to a handle of the surgical instrument **10**, a plurality of indicator switches, and/or any combination thereof. In various examples, the plurality of switches **2056**-**2070** allow a surgeon to manipulate the surgical instrument, provide feedback to the segmented circuit **2000** regarding the position and/or operation of the surgical instrument, and/or indicate unsafe operation of the surgical instrument **10**. In some examples, additional or fewer switches may be coupled to the segmented circuit **2000**, one or more of the switches **2056**-**2070** may be combined into a single switch, and/or expanded to multiple switches. For example, in one example, one or more of the left side and/or right side articulation switches **2058***a*-**2064***b* may be combined into a single multi-position switch.

In one aspect, the safety processor **2004** is configured to implement a watchdog function, among other safety operations. The safety processor **2004** and the primary processor **2006** of the segmented circuit **2000** are in signal communication. A microprocessor alive heartbeat signal is provided at output **2096**. The acceleration segment **2002***c* comprises an accelerometer **2022** configured to monitor movement of the surgical instrument **10**. In various examples, the accelerometer **2022** may be a single, double, or triple axis accelerometer. The accelerometer **2022** may be employed to measures proper acceleration that is not necessarily the coordinate acceleration (rate of change of velocity). Instead, the accelerometer sees the acceleration associated with the phenomenon of weight experienced by a test mass at rest in the frame of reference of the accelerometer **2022**. For example, the accelerometer **2022** at rest on the surface of the earth will measure an acceleration $g=9.8\ m/s^2$ (gravity) straight upwards, due to its weight. Another type of acceleration that accelerometer **2022** can measure is g-force acceleration. In various other examples, the accelerometer **2022** may comprise a single, double, or triple axis accelerometer. Further, the acceleration segment **2002***c* may comprise one or more inertial sensors to detect and measure acceleration, tilt, shock, vibration, rotation, and multiple degrees-of-freedom (DoF). A suitable inertial sensor may comprise an accelerometer (single, double, or triple axis), a magnetometer to measure a magnetic field in space such as the earth's magnetic field, and/or a gyroscope to measure angular velocity.

In one aspect, the safety processor **2004** is configured to implement a watchdog function with respect to one or more circuit segments **2002***c*-**2002***h*, such as, for example, the motor segment **2002***g*. In this regards, the safety processor **2004** employs the watchdog function to detect and recover from malfunctions of the primary processor **2006**. During normal operation, the safety processor **2004** monitors for hardware faults or program errors of the primary processor

2004 and to initiate corrective action or actions. The corrective actions may include placing the primary processor **2006** in a safe state and restoring normal system operation. In one example, the safety processor **2004** is coupled to at least a first sensor. The first sensor measures a first property of the surgical instrument **10** (FIGS. **1-4**). In some examples, the safety processor **2004** is configured to compare the measured property of the surgical instrument **10** to a predetermined value. For example, in one example, a motor sensor **2040***a* is coupled to the safety processor **2004**. The motor sensor **2040***a* provides motor speed and position information to the safety processor **2004**. The safety processor **2004** monitors the motor sensor **2040***a* and compares the value to a maximum speed and/or position value and prevents operation of the motor **2048** above the predetermined values. In some examples, the predetermined values are calculated based on real-time speed and/or position of the motor **2048**, calculated from values supplied by a second motor sensor **2040***b* in communication with the primary processor **2006**, and/or provided to the safety processor **2004** from, for example, a memory module coupled to the safety processor **2004**.

In some aspects, a second sensor is coupled to the primary processor **2006**. The second sensor is configured to measure the first physical property. The safety processor **2004** and the primary processor **2006** are configured to provide a signal indicative of the value of the first sensor and the second sensor respectively. When either the safety processor **2004** or the primary processor **2006** indicates a value outside of an acceptable range, the segmented circuit **2000** prevents operation of at least one of the circuit segments **2002***c*-**2002***h*, such as, for example, the motor segment **2002***g*. For example, in the example illustrated in FIGS. **21**A-**21**B, the safety processor **2004** is coupled to a first motor position sensor **2040***a* and the primary processor **2006** is coupled to a second motor position sensor **2040***b*. The motor position sensors **2040***a*, **2040***b* may comprise any suitable motor position sensor, such as, for example, a magnetic angle rotary input comprising a sine and cosine output. The motor position sensors **2040***a*, **2040***b* provide respective signals to the safety processor **2004** and the primary processor **2006** indicative of the position of the motor **2048**.

The safety processor **2004** and the primary processor **2006** generate an activation signal when the values of the first motor sensor **2040***a* and the second motor sensor **2040***b* are within a predetermined range. When either the primary processor **2006** or the safety processor **2004** to detect a value outside of the predetermined range, the activation signal is terminated and operation of at least one circuit segment **2002***c*-**2002***h*, such as, for example, the motor segment **2002***g*, is interrupted and/or prevented. For example, in some examples, the activation signal from the primary processor **2006** and the activation signal from the safety processor **2004** are coupled to an AND gate. The AND gate is coupled to a motor power switch **2020**. The AND gate maintains the motor power switch **2020** in a closed, or on, position when the activation signal from both the safety processor **2004** and the primary processor **2006** are high, indicating a value of the motor sensors **2040***a*, **2040***b* within the predetermined range. When either of the motor sensors **2040***a*, **2040***b* detect a value outside of the predetermined range, the activation signal from that motor sensor **2040***a*, **2040***b* is set low, and the output of the AND gate is set low, opening the motor power switch **2020**. In some examples, the value of the first sensor **2040***a* and the second sensor **2040***b* is compared, for example, by the safety processor **2004** and/or the primary processor **2006**. When the values of the first sensor and the second sensor are different, the safety processor **2004** and/or the primary processor **2006** may prevent operation of the motor segment **2002***g*.

In some aspects, the safety processor **2004** receives a signal indicative of the value of the second sensor **2040***b* and compares the second sensor value to the first sensor value. For example, in one aspect, the safety processor **2004** is coupled directly to a first motor sensor **2040***a*. A second motor sensor **2040***b* is coupled to a primary processor **2006**, which provides the second motor sensor **2040***b* value to the safety processor **2004**, and/or coupled directly to the safety processor **2004**. The safety processor **2004** compares the value of the first motor sensor **2040** to the value of the second motor sensor **2040***b*. When the safety processor **2004** detects a mismatch between the first motor sensor **2040***a* and the second motor sensor **2040***b*, the safety processor **2004** may interrupt operation of the motor segment **2002***g*, for example, by cutting power to the motor segment **2002***g*.

In some aspects, the safety processor **2004** and/or the primary processor **2006** is coupled to a first sensor **2040***a* configured to measure a first property of a surgical instrument and a second sensor **2040***b* configured to measure a second property of the surgical instrument. The first property and the second property comprise a predetermined relationship when the surgical instrument is operating normally. The safety processor **2004** monitors the first property and the second property. When a value of the first property and/or the second property inconsistent with the predetermined relationship is detected, a fault occurs. When a fault occurs, the safety processor **2004** takes at least one action, such as, for example, preventing operation of at least one of the circuit segments, executing a predetermined operation, and/or resetting the primary processor **2006**. For example, the safety processor **2004** may open the motor power switch **2020** to cut power to the motor circuit segment **2002***g* when a fault is detected.

In one aspect, the safety processor **2004** is configured to execute an independent control algorithm. In operation, the safety processor **2004** monitors the segmented circuit **2000** and is configured to control and/or override signals from other circuit components, such as, for example, the primary processor **2006**, independently. The safety processor **2004** may execute a preprogrammed algorithm and/or may be updated or programmed on the fly during operation based on one or more actions and/or positions of the surgical instrument **10**. For example, in one example, the safety processor **2004** is reprogrammed with new parameters and/or safety algorithms each time a new shaft and/or end effector is coupled to the surgical instrument **10**. In some examples, one or more safety values stored by the safety processor **2004** are duplicated by the primary processor **2006**. Two-way error detection is performed to ensure values and/or parameters stored by either of the processors **2004**, **2006** are correct.

In some aspects, the safety processor **2004** and the primary processor **2006** implement a redundant safety check. The safety processor **2004** and the primary processor **2006** provide periodic signals indicating normal operation. For example, during operation, the safety processor **2004** may indicate to the primary processor **2006** that the safety processor **2004** is executing code and operating normally. The primary processor **2006** may, likewise, indicate to the safety processor **2004** that the primary processor **2006** is executing code and operating normally. In some examples, communication between the safety processor **2004** and the primary processor **2006** occurs at a predetermined interval.

The predetermined interval may be constant or may be variable based on the circuit state and/or operation of the surgical instrument **10**.

FIG. **22** illustrates one example of a power assembly **2100** comprising a usage cycle circuit **2102** configured to monitor a usage cycle count of the power assembly **2100**. The power assembly **2100** may be coupled to a surgical instrument **2110**. The usage cycle circuit **2102** comprises a processor **2104** and a use indicator **2106**. The use indicator **2106** is configured to provide a signal to the processor **2104** to indicate a use of the battery back **2100** and/or a surgical instrument **2110** coupled to the power assembly **2100**. A "use" may comprise any suitable action, condition, and/or parameter such as, for example, changing a modular component of a surgical instrument **2110**, deploying or firing a disposable component coupled to the surgical instrument **2110**, delivering electrosurgical energy from the surgical instrument **2110**, reconditioning the surgical instrument **2110** and/or the power assembly **2100**, exchanging the power assembly **2100**, recharging the power assembly **2100**, and/or exceeding a safety limitation of the surgical instrument **2110** and/or the battery back **2100**.

In some instances, a usage cycle, or use, is defined by one or more power assembly **2100** parameters. For example, in one instance, a usage cycle comprises using more than 5% of the total energy available from the power assembly **2100** when the power assembly **2100** is at a full charge level. In another instance, a usage cycle comprises a continuous energy drain from the power assembly **2100** exceeding a predetermined time limit. For example, a usage cycle may correspond to five minutes of continuous and/or total energy draw from the power assembly **2100**. In some instances, the power assembly **2100** comprises a usage cycle circuit **2102** having a continuous power draw to maintain one or more components of the usage cycle circuit **2102**, such as, for example, the use indicator **2106** and/or a counter **2108**, in an active state.

The processor **2104** maintains a usage cycle count. The usage cycle count indicates the number of uses detected by the use indicator **2106** for the power assembly **2100** and/or the surgical instrument **2110**. The processor **2104** may increment and/or decrement the usage cycle count based on input from the use indicator **2106**. The usage cycle count is used to control one or more operations of the power assembly **2100** and/or the surgical instrument **2110**. For example, in some instances, a power assembly **2100** is disabled when the usage cycle count exceeds a predetermined usage limit. Although the instances discussed herein are discussed with respect to incrementing the usage cycle count above a predetermined usage limit, those skilled in the art will recognize that the usage cycle count may start at a predetermined amount and may be decremented by the processor **2104**. In this instance, the processor **2104** initiates and/or prevents one or more operations of the power assembly **2100** when the usage cycle count falls below a predetermined usage limit.

The usage cycle count is maintained by a counter **2108**. The counter **2108** comprises any suitable circuit, such as, for example, a memory module, an analog counter, and/or any circuit configured to maintain a usage cycle count. In some instances, the counter **2108** is formed integrally with the processor **2104**. In other instances, the counter **2108** comprises a separate component, such as, for example, a solid state memory module. In some instances, the usage cycle count is provided to a remote system, such as, for example, a central database. The usage cycle count is transmitted by a communications module **2112** to the remote system. The communications module **2112** is configured to use any suitable communications medium, such as, for example, wired and/or wireless communication. In some instances, the communications module **2112** is configured to receive one or more instructions from the remote system, such as, for example, a control signal when the usage cycle count exceeds the predetermined usage limit.

In some instances, the use indicator **2106** is configured to monitor the number of modular components used with a surgical instrument **2110** coupled to the power assembly **2100**. A modular component may comprise, for example, a modular shaft, a modular end effector, and/or any other modular component. In some instances, the use indicator **2106** monitors the use of one or more disposable components, such as, for example, insertion and/or deployment of a staple cartridge within an end effector coupled to the surgical instrument **2110**. The use indicator **2106** comprises one or more sensors for detecting the exchange of one or more modular and/or disposable components of the surgical instrument **2110**.

In some instances, the use indicator **2106** is configured to monitor single patient surgical procedures performed while the power assembly **2100** is installed. For example, the use indicator **2106** may be configured to monitor firings of the surgical instrument **2110** while the power assembly **2100** is coupled to the surgical instrument **2110**. A firing may correspond to deployment of a staple cartridge, application of electrosurgical energy, and/or any other suitable surgical event. The use indicator **2106** may comprise one or more circuits for measuring the number of firings while the power assembly **2100** is installed. The use indicator **2106** provides a signal to the processor **2104** when a single patient procedure is performed and the processor **2104** increments the usage cycle count.

In some instances, the use indicator **2106** comprises a circuit configured to monitor one or more parameters of the power source **2114**, such as, for example, a current draw from the power source **2114**. The one or more parameters of the power source **2114** correspond to one or more operations performable by the surgical instrument **2110**, such as, for example, a cutting and sealing operation. The use indicator **2106** provides the one or more parameters to the processor **2104**, which increments the usage cycle count when the one or more parameters indicate that a procedure has been performed.

In some instances, the use indicator **2106** comprises a timing circuit configured to increment a usage cycle count after a predetermined time period. The predetermined time period corresponds to a single patient procedure time, which is the time required for an operator to perform a procedure, such as, for example, a cutting and sealing procedure. When the power assembly **2100** is coupled to the surgical instrument **2110**, the processor **2104** polls the use indicator **2106** to determine when the single patient procedure time has expired. When the predetermined time period has elapsed, the processor **2104** increments the usage cycle count. After incrementing the usage cycle count, the processor **2104** resets the timing circuit of the use indicator **2106**.

In some instances, the use indicator **2106** comprises a time constant that approximates the single patient procedure time. In one example, the usage cycle circuit **2102** comprises a resistor-capacitor (RC) timing circuit **2506**. The RC timing circuit comprises a time constant defined by a resistor-capacitor pair. The time constant is defined by the values of the resistor and the capacitor. In one example, the usage cycle circuit **2552** comprises a rechargeable battery and a clock. When the power assembly **2100** is installed in a

surgical instrument, the rechargeable battery is charged by the power source. The rechargeable battery comprises enough power to run the clock for at least the single patient procedure time. The clock may comprise a real time clock, a processor configured to implement a time function, or any other suitable timing circuit.

Referring still to FIG. **22**, in some instances, the use indicator **2106** comprises a sensor configured to monitor one or more environmental conditions experienced by the power assembly **2100**. For example, the use indicator **2106** may comprise an accelerometer. The accelerometer is configured to monitor acceleration of the power assembly **2100**. The power assembly **2100** comprises a maximum acceleration tolerance. Acceleration above a predetermined threshold indicates, for example, that the power assembly **2100** has been dropped. When the use indicator **2106** detects acceleration above the maximum acceleration tolerance, the processor **2104** increments a usage cycle count. In some instances, the use indicator **2106** comprises a moisture sensor. The moisture sensor is configured to indicate when the power assembly **2100** has been exposed to moisture. The moisture sensor may comprise, for example, an immersion sensor configured to indicate when the power assembly **2100** has been fully immersed in a cleaning fluid, a moisture sensor configured to indicate when moisture is in contact with the power assembly **2100** during use, and/or any other suitable moisture sensor.

In some instances, the use indicator **2106** comprises a chemical exposure sensor. The chemical exposure sensor is configured to indicate when the power assembly **2100** has come into contact with harmful and/or dangerous chemicals. For example, during a sterilization procedure, an inappropriate chemical may be used that leads to degradation of the power assembly **2100**. The processor **2104** increments the usage cycle count when the use indicator **2106** detects an inappropriate chemical.

In some instances, the usage cycle circuit **2102** is configured to monitor the number of reconditioning cycles experienced by the power assembly **2100**. A reconditioning cycle may comprise, for example, a cleaning cycle, a sterilization cycle, a charging cycle, routine and/or preventative maintenance, and/or any other suitable reconditioning cycle. The use indicator **2106** is configured to detect a reconditioning cycle. For example, the use indicator **2106** may comprise a moisture sensor to detect a cleaning and/or sterilization cycle. In some instances, the usage cycle circuit **2102** monitors the number of reconditioning cycles experienced by the power assembly **2100** and disables the power assembly **2100** after the number of reconditioning cycles exceeds a predetermined threshold.

The usage cycle circuit **2102** may be configured to monitor the number of power assembly **2100** exchanges. The usage cycle circuit **2102** increments the usage cycle count each time the power assembly **2100** is exchanged. When the maximum number of exchanges is exceeded the usage cycle circuit **2102** locks out the power assembly **2100** and/or the surgical instrument **2110**. In some instances, when the power assembly **2100** is coupled the surgical instrument **2110**, the usage cycle circuit **2102** identifies the serial number of the power assembly **2100** and locks the power assembly **2100** such that the power assembly **2100** is usable only with the surgical instrument **2110**. In some instances, the usage cycle circuit **2102** increments the usage cycle each time the power assembly **2100** is removed from and/or coupled to the surgical instrument **2110**.

In some instances, the usage cycle count corresponds to sterilization of the power assembly **2100**. The use indicator **2106** comprises a sensor configured to detect one or more parameters of a sterilization cycle, such as, for example, a temperature parameter, a chemical parameter, a moisture parameter, and/or any other suitable parameter. The processor **2104** increments the usage cycle count when a sterilization parameter is detected. The usage cycle circuit **2102** disables the power assembly **2100** after a predetermined number of sterilizations. In some instances, the usage cycle circuit **2102** is reset during a sterilization cycle, a voltage sensor to detect a recharge cycle, and/or any suitable sensor. The processor **2104** increments the usage cycle count when a reconditioning cycle is detected. The usage cycle circuit **2102** is disabled when a sterilization cycle is detected. The usage cycle circuit **2102** is reactivated and/or reset when the power assembly **2100** is coupled to the surgical instrument **2110**. In some instances, the use indicator comprises a zero power indicator. The zero power indicator changes state during a sterilization cycle and is checked by the processor **2104** when the power assembly **2100** is coupled to a surgical instrument **2110**. When the zero power indicator indicates that a sterilization cycle has occurred, the processor **2104** increments the usage cycle count.

A counter **2108** maintains the usage cycle count. In some instances, the counter **2108** comprises a non-volatile memory module. The processor **2104** increments the usage cycle count stored in the non-volatile memory module each time a usage cycle is detected. The memory module may be accessed by the processor **2104** and/or a control circuit, such as, for example, the control circuit **200**. When the usage cycle count exceeds a predetermined threshold, the processor **2104** disables the power assembly **2100**. In some instances, the usage cycle count is maintained by a plurality of circuit components. For example, in one instance, the counter **2108** comprises a resistor (or fuse) pack. After each use of the power assembly **2100**, a resistor (or fuse) is burned to an open position, changing the resistance of the resistor pack. The power assembly **2100** and/or the surgical instrument **2110** reads the remaining resistance. When the last resistor of the resistor pack is burned out, the resistor pack has a predetermined resistance, such as, for example, an infinite resistance corresponding to an open circuit, which indicates that the power assembly **2100** has reached its usage limit. In some instances, the resistance of the resistor pack is used to derive the number of uses remaining.

In some instances, the usage cycle circuit **2102** prevents further use of the power assembly **2100** and/or the surgical instrument **2110** when the usage cycle count exceeds a predetermined usage limit. In one instance, the usage cycle count associated with the power assembly **2100** is provided to an operator, for example, utilizing a screen formed integrally with the surgical instrument **2110**. The surgical instrument **2110** provides an indication to the operator that the usage cycle count has exceeded a predetermined limit for the power assembly **2100**, and prevents further operation of the surgical instrument **2110**.

In some instances, the usage cycle circuit **2102** is configured to physically prevent operation when the predetermined usage limit is reached. For example, the power assembly **2100** may comprise a shield configured to deploy over contacts of the power assembly **2100** when the usage cycle count exceeds the predetermined usage limit. The shield prevents recharge and use of the power assembly **2100** by covering the electrical connections of the power assembly **2100**.

In some instances, the usage cycle circuit **2102** is located at least partially within the surgical instrument **2110** and is configured to maintain a usage cycle count for the surgical

instrument **2110**. FIG. **22** illustrates one or more components of the usage cycle circuit **2102** within the surgical instrument **2110** in phantom, illustrating the alternative positioning of the usage cycle circuit **2102**. When a predetermined usage limit of the surgical instrument **2110** is exceeded, the usage cycle circuit **2102** disables and/or prevents operation of the surgical instrument **2110**. The usage cycle count is incremented by the usage cycle circuit **2102** when the use indicator **2106** detects a specific event and/or requirement, such as, for example, firing of the surgical instrument **2110**, a predetermined time period corresponding to a single patient procedure time, based on one or more motor parameters of the surgical instrument **2110**, in response to a system diagnostic indicating that one or more predetermined thresholds are met, and/or any other suitable requirement. As discussed above, in some instances, the use indicator **2106** comprises a timing circuit corresponding to a single patient procedure time. In other instances, the use indicator **2106** comprises one or more sensors configured to detect a specific event and/or condition of the surgical instrument **2110**.

In some instances, the usage cycle circuit **2102** is configured to prevent operation of the surgical instrument **2110** after the predetermined usage limit is reached. In some instances, the surgical instrument **2110** comprises a visible indicator to indicate when the predetermined usage limit has been reached and/or exceeded. For example, a flag, such as a red flag, may pop-up from the surgical instrument **2110**, such as from the handle, to provide a visual indication to the operator that the surgical instrument **2110** has exceeded the predetermined usage limit. As another example, the usage cycle circuit **2102** may be coupled to a display formed integrally with the surgical instrument **2110**. The usage cycle circuit **2102** displays a message indicating that the predetermined usage limit has been exceeded. The surgical instrument **2110** may provide an audible indication to the operator that the predetermined usage limit has been exceeded. For example, in one instance, the surgical instrument **2110** emits an audible tone when the predetermined usage limit is exceeded and the power assembly **2100** is removed from the surgical instrument **2110**. The audible tone indicates the last use of the surgical instrument **2110** and indicates that the surgical instrument **2110** should be disposed or reconditioned.

In some instances, the usage cycle circuit **2102** is configured to transmit the usage cycle count of the surgical instrument **2110** to a remote location, such as, for example, a central database. The usage cycle circuit **2102** comprises a communications module **2112** configured to transmit the usage cycle count to the remote location. The communications module **2112** may utilize any suitable communications system, such as, for example, wired or wireless communications system. The remote location may comprise a central database configured to maintain usage information. In some instances, when the power assembly **2100** is coupled to the surgical instrument **2110**, the power assembly **2100** records a serial number of the surgical instrument **2110**. The serial number is transmitted to the central database, for example, when the power assembly **2100** is coupled to a charger. In some instances, the central database maintains a count corresponding to each use of the surgical instrument **2110**. For example, a bar code associated with the surgical instrument **2110** may be scanned each time the surgical instrument **2110** is used. When the use count exceeds a predetermined usage limit, the central database provides a signal to the surgical instrument **2110** indicating that the surgical instrument **2110** should be discarded.

The surgical instrument **2110** may be configured to lock and/or prevent operation of the surgical instrument **2110** when the usage cycle count exceeds a predetermined usage limit. In some instances, the surgical instrument **2110** comprises a disposable instrument and is discarded after the usage cycle count exceeds the predetermined usage limit. In other instances, the surgical instrument **2110** comprises a reusable surgical instrument which may be reconditioned after the usage cycle count exceeds the predetermined usage limit. The surgical instrument **2110** initiates a reversible lockout after the predetermined usage limit is met. A technician reconditions the surgical instrument **2110** and releases the lockout, for example, utilizing a specialized technician key configured to reset the usage cycle circuit **2102**.

In some aspects, the segmented circuit **2000** is configured for sequential start-up. An error check is performed by each circuit segment **2002***a*-**2002***g* prior to energizing the next sequential circuit segment **2002***a*-**2002***g*. FIG. **23** illustrates one example of a process for sequentially energizing a segmented circuit **2270**, such as, for example, the segmented circuit **2000**. When a battery **2008** is coupled to the segmented circuit **2000**, the safety processor **2004** is energized **2272**. The safety processor **2004** performs a self-error check **2274**. When an error is detected **2276***a*, the safety processor stops energizing the segmented circuit **2000** and generates an error code **2278***a*. When no errors are detected **2276***b*, the safety processor **2004** initiates **2278***b* power-up of the primary processor **2006**. The primary processor **2006** performs a self-error check. When no errors are detected, the primary processor **2006** begins sequential power-up of each of the remaining circuit segments **2278***b*. Each circuit segment is energized and error checked by the primary processor **2006**. When no errors are detected, the next circuit segment is energized **2278***b*. When an error is detected, the safety processor **2004** and/or the primary process stops energizing the current segment and generates an error **2278***a*. The sequential start-up continues until all of the circuit segments **2002***a*-**2002***g* have been energized. In some examples, the segmented circuit **2000** transitions from sleep mode following a similar sequential power-up process **11250**.

FIG. **24** illustrates one aspect of a power segment **2302** comprising a plurality of daisy chained power converters **2314**, **2316**, **2318**. The power segment **2302** comprises a battery **2308**. The battery **2308** is configured to provide a source voltage, such as, for example, 12V. A current sensor **2312** is coupled to the battery **2308** to monitor the current draw of a segmented circuit and/or one or more circuit segments. The current sensor **2312** is coupled to an FET switch **2313**. The battery **2308** is coupled to one or more voltage converters **2309**, **2314**, **2316**. An always on converter **2309** provides a constant voltage to one or more circuit components, such as, for example, a motion sensor **2322**. The always on converter **2309** comprises, for example, a 3.3V converter. The always on converter **2309** may provide a constant voltage to additional circuit components, such as, for example, a safety processor (not shown). The battery **2308** is coupled to a boost converter **2318**. The boost converter **2318** is configured to provide a boosted voltage above the voltage provided by the battery **2308**. For example, in the illustrated example, the battery **2308** provides a voltage of 12V. The boost converter **2318** is configured to boost the voltage to 13V. The boost converter **2318** is configured to maintain a minimum voltage during operation of a surgical instrument, for example, the surgical instrument **10** (FIGS. **1**-**4**). Operation of a motor can result in the power provided to the primary processor **2306** dropping below a minimum threshold and creating a brownout or

reset condition in the primary processor **2306**. The boost converter **2318** ensures that sufficient power is available to the primary processor **2306** and/or other circuit components, such as the motor controller **2343**, during operation of the surgical instrument **10**. In some examples, the boost converter **2318** is coupled directly one or more circuit components, such as, for example, an OLED display **2388**.

The boost converter **2318** is coupled to one or more step-down converters to provide voltages below the boosted voltage level. A first voltage converter **2316** is coupled to the boost converter **2318** and provides a first stepped-down voltage to one or more circuit components. In the illustrated example, the first voltage converter **2316** provides a voltage of 5V. The first voltage converter **2316** is coupled to a rotary position encoder **2340**. A FET switch **2317** is coupled between the first voltage converter **2316** and the rotary position encoder **2340**. The FET switch **2317** is controlled by the processor **2306**. The processor **2306** opens the FET switch **2317** to deactivate the position encoder **2340**, for example, during power intensive operations. The first voltage converter **2316** is coupled to a second voltage converter **2314** configured to provide a second stepped-down voltage. The second stepped-down voltage comprises, for example, 3.3V. The second voltage converter **2314** is coupled to a processor **2306**. In some examples, the boost converter **2318**, the first voltage converter **2316**, and the second voltage converter **2314** are coupled in a daisy chain configuration. The daisy chain configuration allows the use of smaller, more efficient converters for generating voltage levels below the boosted voltage level. The examples, however, are not limited to the particular voltage range(s) described in the context of this specification.

FIG. **25** illustrates one aspect of a segmented circuit **2400** configured to maximize power available for critical and/or power intense functions. The segmented circuit **2400** comprises a battery **2408**. The battery **2408** is configured to provide a source voltage such as, for example, 12V. The source voltage is provided to a plurality of voltage converters **2409**, **2418**. An always-on voltage converter **2409** provides a constant voltage to one or more circuit components, for example, a motion sensor **2422** and a safety processor **2404**. The always-on voltage converter **2409** is directly coupled to the battery **2408**. The always-on converter **2409** provides a voltage of 3.3V, for example. The examples, however, are not limited to the particular voltage range(s) described in the context of this specification.

The segmented circuit **2400** comprises a boost converter **2418**. The boost converter **2418** provides a boosted voltage above the source voltage provided by the battery **2408**, such as, for example, 13V. The boost converter **2418** provides a boosted voltage directly to one or more circuit components, such as, for example, an OLED display **2488** and a motor controller **2443**. By coupling the OLED display **2488** directly to the boost converter **2418**, the segmented circuit **2400** eliminates the need for a power converter dedicated to the OLED display **2488**. The boost converter **2418** provides a boosted voltage to the motor controller **2443** and the motor **2448** during one or more power intensive operations of the motor **2448**, such as, for example, a cutting operation. The boost converter **2418** is coupled to a step-down converter **2416**. The step-down converter **2416** is configured to provide a voltage below the boosted voltage to one or more circuit components, such as, for example, 5V. The step-down converter **2416** is coupled to, for example, a FET switch **2451** and a position encoder **2440**. The FET switch **2451** is coupled to the primary processor **2406**. The primary processor **2406** opens the FET switch **2451** when transitioning the segmented circuit **2400** to sleep mode and/or during power intensive functions requiring additional voltage delivered to the motor **2448**. Opening the FET switch **2451** deactivates the position encoder **2440** and eliminates the power draw of the position encoder **2440**. The examples, however, are not limited to the particular voltage range(s) described in the context of this specification.

The step-down converter **2416** is coupled to a linear converter **2414**. The linear converter **2414** is configured to provide a voltage of, for example, 3.3V. The linear converter **2414** is coupled to the primary processor **2406**. The linear converter **2414** provides an operating voltage to the primary processor **2406**. The linear converter **2414** may be coupled to one or more additional circuit components. The examples, however, are not limited to the particular voltage range(s) described in the context of this specification.

The segmented circuit **2400** comprises a bailout switch **2456**. The bailout switch **2456** is coupled to a bailout door on the surgical instrument **10**. The bailout switch **2456** and the safety processor **2404** are coupled to an AND gate **2419**. The AND gate **2419** provides an input to a FET switch **2413**. When the bailout switch **2456** detects a bailout condition, the bailout switch **2456** provides a bailout shutdown signal to the AND gate **2419**. When the safety processor **2404** detects an unsafe condition, such as, for example, due to a sensor mismatch, the safety processor **2404** provides a shutdown signal to the AND gate **2419**. In some examples, both the bailout shutdown signal and the shutdown signal are high during normal operation and are low when a bailout condition or an unsafe condition is detected. When the output of the AND gate **2419** is low, the FET switch **2413** is opened and operation of the motor **2448** is prevented. In some examples, the safety processor **2404** utilizes the shutdown signal to transition the motor **2448** to an off state in sleep mode. A third input to the FET switch **2413** is provided by a current sensor **2412** coupled to the battery **2408**. The current sensor **2412** monitors the current drawn by the circuit **2400** and opens the FET switch **2413** to shut-off power to the motor **2448** when an electrical current above a predetermined threshold is detected. The FET switch **2413** and the motor controller **2443** are coupled to a bank of FET switches **2445** configured to control operation of the motor **2448**.

A motor current sensor **2446** is coupled in series with the motor **2448** to provide a motor current sensor reading to a current monitor **2447**. The current monitor **2447** is coupled to the primary processor **2406**. The current monitor **2447** provides a signal indicative of the current draw of the motor **2448**. The primary processor **2406** may utilize the signal from the motor current **2447** to control operation of the motor, for example, to ensure the current draw of the motor **2448** is within an acceptable range, to compare the current draw of the motor **2448** to one or more other parameters of the circuit **2400** such as, for example, the position encoder **2440**, and/or to determine one or more parameters of a treatment site. In some examples, the current monitor **2447** may be coupled to the safety processor **2404**.

In some aspects, actuation of one or more handle controls, such as, for example, a firing trigger, causes the primary processor **2406** to decrease power to one or more components while the handle control is actuated. For example, in one example, a firing trigger controls a firing stroke of a cutting member. The cutting member is driven by the motor **2448**. Actuation of the firing trigger results in forward operation of the motor **2448** and advancement of the cutting member. During firing, the primary processor **2406** closes the FET switch **2451** to remove power from the position

encoder **2440**. The deactivation of one or more circuit components allows higher power to be delivered to the motor **2448**. When the firing trigger is released, full power is restored to the deactivated components, for example, by closing the FET switch **2451** and reactivating the position encoder **2440**.

In some aspects, the safety processor **2404** controls operation of the segmented circuit **2400**. For example, the safety processor **2404** may initiate a sequential power-up of the segmented circuit **2400**, transition of the segmented circuit **2400** to and from sleep mode, and/or may override one or more control signals from the primary processor **2406**. For example, in the illustrated example, the safety processor **2404** is coupled to the step-down converter **2416**. The safety processor **2404** controls operation of the segmented circuit **2400** by activating or deactivating the step-down converter **2416** to provide power to the remainder of the segmented circuit **2400**.

FIG. **26** illustrates one aspect of a power system **2500** comprising a plurality of daisy chained power converters **2514**, **2516**, **2518** configured to be sequentially energized. The plurality of daisy chained power converters **2514**, **2516**, **2518** may be sequentially activated by, for example, a safety processor during initial power-up and/or transition from sleep mode. The safety processor may be powered by an independent power converter (not shown). For example, in one example, when a battery voltage V_{BATT} is coupled to the power system **2500** and/or an accelerometer detects movement in sleep mode, the safety processor initiates a sequential start-up of the daisy chained power converters **2514**, **2516**, **2518**. The safety processor activates the 13V boost section **2518**. The boost section **2518** is energized and performs a self-check. In some examples, the boost section **2518** comprises an integrated circuit **2520** configured to boost the source voltage and to perform a self check. A diode D prevents power-up of a 5V supply section **2516** until the boost section **2518** has completed a self-check and provided a signal to the diode D indicating that the boost section **2518** did not identify any errors. In some examples, this signal is provided by the safety processor. The examples, however, are not limited to the particular voltage range(s) described in the context of this specification.

The 5V supply section **2516** is sequentially powered-up after the boost section **2518**. The 5V supply section **2516** performs a self-check during power-up to identify any errors in the 5V supply section **2516**. The 5V supply section **2516** comprises an integrated circuit **2515** configured to provide a step-down voltage from the boost voltage and to perform an error check. When no errors are detected, the 5V supply section **2516** completes sequential power-up and provides an activation signal to the 3.3V supply section **2514**. In some examples, the safety processor provides an activation signal to the 3.3V supply section **2514**. The 3.3V supply section comprises an integrated circuit **2513** configured to provide a step-down voltage from the 5V supply section **2516** and perform a self-error check during power-up. When no errors are detected during the self-check, the 3.3V supply section **2514** provides power to the primary processor. The primary processor is configured to sequentially energize each of the remaining circuit segments. By sequentially energizing the power system **2500** and/or the remainder of a segmented circuit, the power system **2500** reduces error risks, allows for stabilization of voltage levels before loads are applied, and prevents large current draws from all hardware being turned on simultaneously in an uncontrolled manner. The examples, however, are not limited to the particular voltage range(s) described in the context of this specification.

In one aspect, the power system **2500** comprises an over voltage identification and mitigation circuit. The over voltage identification and mitigation circuit is configured to detect a monopolar return current in the surgical instrument and interrupt power from the power segment when the monopolar return current is detected. The over voltage identification and mitigation circuit is configured to identify ground floatation of the power system. The over voltage identification and mitigation circuit comprises a metal oxide varistor. The over voltage identification and mitigation circuit comprises at least one transient voltage suppression diode.

FIG. **27** illustrates one aspect of a segmented circuit **2600** comprising an isolated control section **2602**. The isolated control section **2602** isolates control hardware of the segmented circuit **2600** from a power section (not shown) of the segmented circuit **2600**. The control section **2602** comprises, for example, a primary processor **2606**, a safety processor (not shown), and/or additional control hardware, for example, a FET Switch **2617**. The power section comprises, for example, a motor, a motor driver, and/or a plurality of motor MOSFETS. The isolated control section **2602** comprises a charging circuit **2603** and a rechargeable battery **2608** coupled to a 5V power converter **2616**. The charging circuit **2603** and the rechargeable battery **2608** isolate the primary processor **2606** from the power section. In some examples, the rechargeable battery **2608** is coupled to a safety processor and any additional support hardware. Isolating the control section **2602** from the power section allows the control section **2602**, for example, the primary processor **2606**, to remain active even when main power is removed, provides a filter, through the rechargeable battery **2608**, to keep noise out of the control section **2602**, isolates the control section **2602** from heavy swings in the battery voltage to ensure proper operation even during heavy motor loads, and/or allows for real-time operating system (RTOS) to be used by the segmented circuit **2600**. In some examples, the rechargeable battery **2608** provides a stepped-down voltage to the primary processor, such as, for example, 3.3V. The examples, however, are not limited to the particular voltage range(s) described in the context of this specification.

FIGS. **28**A and **28**B illustrate another aspect of a control circuit **3000** configured to control the powered surgical instrument **10**, illustrated in FIGS. **1-18**A. As shown in FIGS. **18**A, **28**B, the handle assembly **14** may include a motor **3014** which can be controlled by a motor driver **3015** and can be employed by the firing system of the surgical instrument **10**. In various forms, the motor **3014** may be a DC brushed driving motor having a maximum rotation of, approximately, 25,000 RPM, for example. In other arrangements, the motor **3014** may include a brushless motor, a cordless motor, a synchronous motor, a stepper motor, or any other suitable electric motor. In certain circumstances, the motor driver **3015** may comprise an H-Bridge FETs **3019**, as illustrated in FIGS. **28**A and **28**B, for example. The motor **3014** can be powered by a power assembly **3006**, which can be releasably mounted to the handle assembly **14**. The power assembly **3006** is configured to supply control power to the surgical instrument **10**. The power assembly **3006** may comprise a battery which may include a number of battery cells connected in series that can be used as the power source to power the surgical instrument **10**. In such configuration, the power assembly **3006** may be referred to as a battery pack. In certain circumstances, the battery cells of the power assembly **3006** may be replaceable and/or rechargeable. In at

least one example, the battery cells can be Lithium-Ion batteries which can be separably couplable to the power assembly **3006**.

Examples of drive systems and closure systems that are suitable for use with the surgical instrument **10** are disclosed in U.S. Provisional Patent Application Ser. No. 61/782,866, entitled CONTROL SYSTEM OF A SURGICAL INSTRUMENT, and filed Mar. 14, 2013, the entire disclosure of which is incorporated by reference herein in its entirety. For example, the electric motor **3014** can include a rotatable shaft (not shown) that may operably interface with a gear reducer assembly that can be mounted in meshing engagement with a set, or rack, of drive teeth on a longitudinally-movable drive member. In use, a voltage polarity provided by the battery can operate the electric motor **3014** to drive the longitudinally-movable drive member to effectuate the end effector **300**. For example, the motor **3014** can be configured to drive the longitudinally-movable drive member to advance a firing mechanism to fire staples into tissue captured by the end effector **300** from a staple cartridge assembled with the end effector **300** and/or advance a cutting member to cut tissue captured by the end effector **300**, for example.

As illustrated in FIGS. **28**A and **28**B and as described below in greater detail, the power assembly **3006** may include a power management controller which can be configured to modulate the power output of the power assembly **3006** to deliver a first power output to power the motor **3014** to advance the cutting member while the interchangeable shaft **200** is coupled to the handle assembly **14** (FIG. **1**) and to deliver a second power output to power the motor **3014** to advance the cutting member while the interchangeable shaft assembly **200** is coupled to the handle assembly **14**, for example. Such modulation can be beneficial in avoiding transmission of excessive power to the motor **3014** beyond the requirements of an interchangeable shaft assembly that is coupled to the handle assembly **14**.

In certain circumstances, the interface **3024** can facilitate transmission of the one or more communication signals between the power management controller **3016** and the shaft assembly controller **3022** by routing such communication signals through a main controller **3017** residing in the handle assembly **14** (FIG. **1**), for example. In other circumstances, the interface **3024** can facilitate a direct line of communication between the power management controller **3016** and the shaft assembly controller **3022** through the handle assembly **14** while the shaft assembly **200** (FIG. **1**) and the power assembly **3006** are coupled to the handle assembly **14**.

In one instance, the main microcontroller **3017** may be any single core or multicore processor such as those known under the trade name ARM Cortex by Texas Instruments. In one instance, the surgical instrument **10** (FIGS. **1-4**) may comprise a power management controller **3016** such as, for example, a safety microcontroller platform comprising two microcontroller-based families such as TMS570 and RM4x known under the trade name Hercules ARM Cortex R4, also by Texas Instruments. Nevertheless, other suitable substitutes for microcontrollers and safety processor may be employed, without limitation. In one instance, the safety processor **2004** (FIG. **21**A) may be configured specifically for IEC 61508 and ISO 26262 safety critical applications, among others, to provide advanced integrated safety features while delivering scalable performance, connectivity, and memory options.

In certain instances, the microcontroller **3017** may be an LM 4F230H5QR, available from Texas Instruments, for example. In at least one example, the Texas Instruments LM4F230H5QR is an ARM Cortex-M4F Processor Core comprising on-chip memory of 256 KB single-cycle flash memory, or other non-volatile memory, up to 40 MHz, a prefetch buffer to improve performance above 40 MHz, a 32 KB single-cycle serial random access memory (SRAM), internal read-only memory (ROM) loaded with StellarisWare® software, 2 KB electrically erasable programmable read-only memory (EEPROM), one or more pulse width modulation (PWM) modules, one or more quadrature encoder inputs (QEI) analog, one or more 12-bit Analog-to-Digital Converters (ADC) with 12 analog input channels, among other features that are readily available for the product datasheet. The present disclosure should not be limited in this context.

FIG. **29** is a block diagram the surgical instrument of FIG. **1** illustrating interfaces between the handle assembly **14** (FIG. **1**) and the power assembly and between the handle assembly **14** and the interchangeable shaft assembly. As shown in FIG. **29**, the power assembly **3006** may include a power management circuit **3034** which may comprise the power management controller **3016**, a power modulator **3038**, and a current sense circuit **3036**. The power management circuit **3034** can be configured to modulate power output of the battery **3007** based on the power requirements of the shaft assembly **200** (FIG. **1**) while the shaft assembly **200** and the power assembly **3006** are coupled to the handle assembly **14**. For example, the power management controller **3016** can be programmed to control the power modulator **3038** of the power output of the power assembly **3006** and the current sense circuit **3036** can be employed to monitor power output of the power assembly **3006** to provide feedback to the power management controller **3016** about the power output of the battery **3007** so that the power management controller **3016** may adjust the power output of the power assembly **3006** to maintain a desired output.

It is noteworthy that the power management controller **3016** and/or the shaft assembly controller **3022** each may comprise one or more processors and/or memory units which may store a number of software modules. Although certain modules and/or blocks of the surgical instrument **14** (FIG. **1**) may be described by way of example, it can be appreciated that a greater or lesser number of modules and/or blocks may be used. Further, although various instances may be described in terms of modules and/or blocks to facilitate description, such modules and/or blocks may be implemented by one or more hardware components, e.g., processors, Digital Signal Processors (DSPs), Programmable Logic Devices (PLDs), Application Specific Integrated Circuits (ASICs), circuits, registers and/or software components, e.g., programs, subroutines, logic and/or combinations of hardware and software components.

In certain instances, the surgical instrument **10** (FIGS. **1-4**) may comprise an output device **3042** which may include one or more devices for providing a sensory feedback to a user. Such devices may comprise, for example, visual feedback devices (e.g., an LCD display screen, LED indicators), audio feedback devices (e.g., a speaker, a buzzer) or tactile feedback devices (e.g., haptic actuators). In certain circumstances, the output device **3042** may comprise a display **3043** which may be included in the handle assembly **14** (FIG. **1**). The shaft assembly controller **3022** and/or the power management controller **3016** can provide feedback to a user of the surgical instrument **10** through the output device **3042**. The interface **3024** can be configured to connect the shaft assembly controller **3022** and/or the power management controller **3016** to the output device **3042**. The

reader will appreciate that the output device **3042** can instead be integrated with the power assembly **3006**. In such circumstances, communication between the output device **3042** and the shaft assembly controller **3022** may be accomplished through the interface **3024** while the shaft assembly **200** is coupled to the handle assembly **14**.

Having described a surgical instrument **10** (FIGS. **1-4**) and various control circuits **2000**, **3000** for controlling the operation thereof, the disclosure now turns to various specific configurations of the surgical instrument **10** and control circuits **2000** (or **3000**).

In various aspects, the present disclosure provides an instrument **10** (described in connection with FIGS. **1-29**) configured to sense tissue compression when tissue is clamped between the jaw members of the end effector, such as, for example, between the anvil and the staple cartridge. In one example, the instrument **10** (FIGS. **1-4**) can be configured to sense tissue contact in one of the jaw members such as the anvil and/or the staple cartridge. In another example, the instrument **10** can be configured to sense the pressure applied to the tissue by the jaw members. In yet another example, the instrument **10** can be configured to measure the electrical impedance (resistance) through the tissue between the jaw members. This may be achieved by embedding micro electrodes in at least one of the jaw members to drive a low amplitude, low energy, RF signal through the tissue to enable a nontherapeutic measurement of tissue impedance. The energy level is kept low enough to avoid therapeutic tissue effects such as coagulation, sealing, welding, or cautery. Further, the instrument **10** can include devices to produce two distinct measures from a single set of energized and return paths. In one example, multiple frequency signals can be overlaid to measure impedance in different places simultaneously. This can include a single active electrode with the channel and the anvil grounded through isolated paths with filters for different frequency RF signals. Otherwise, two isolated return paths with independent filters, which are part of the handle electronics system, can be used. In another example, the sequential impedance measurements would be multiplexed at variable RF frequencies.

RF technology has been used in endocutters for some time. The challenge in employing the technology is in the delivery of high density RF energy and shorting between the jaw members of the end effector. Despite the shortcomings of using RF energy therapeutically, RF technology can be effectively employed sub-therapeutically to sense tissue compression rather than actually coagulating, sealing, or cauterizing tissue. In the sub-therapeutic sense, the endosurgical device can employ RF energy to sense internal tissue parameters and adjust the deployment of staples rather and being employed as an adjunct to the stapling operation to assist in sealing the tissue prior to cutting the tissue with a knife.

RF technology used in endosurgical medical devices, and for example, in RF endocutters, may introduce the challenges of handling high densities of energy and dealing with shorting. However, RF technology may be less challenging if used merely to sense tissue compression rather than, for example, cauterizing tissue. RF technology may be used as a way for medical devices, such as endocutters, to sense internal tissue parameters such as compression, and adjust stapling deployment in response. RF electrode and cautery devices may utilize the same electrodes for sensing tissue impedance as they do to melt tissue. These same electrodes may be implemented with significantly less electrical and power requirements as a tissue compression sensor system.

RF electrodes and cautery devices can utilize the same electrodes for sensing tissue impedance as they do to weld the tissue by applying energy thereto. Nevertheless, in the an endocutter instrument context, the RF electrodes can be employed to as a tissue compression sensor system with significantly less electronics and power needs relative to a fully equipped electrosurgical device. A single energized electrode on the cartridge, for example, or perhaps an isolated knife, can be used to make multiple tissue compression measurements simultaneously. If multiple RF signals are overlaid or multiplexed they can be transmitted down the single power conductor and then allowed to return on either the channel frame or the anvil of the device. If a filter is provided in the anvil and channel contacts before they join the common return path, the tissue impedance for both paths can be differentiated. This would provide a measure of through tissue versus lateral tissue compression. This filtered approach may be implemented proximal and distal as opposed to vertical and lateral depending on the placement of the filters and the location of the metallic electrically conductive return paths. The smaller frequency generator and signal processor may be implemented in a small package form factor on an existing circuit board or a sub circuit board without the need for extensive extra cost associated with an RF sealing/cauterization system.

Referring to FIG. **30**, an endocutter **6000** may include a handle component **6002**, a shaft component **6004**, and an end-effector component **6006**. The endocutter **6000** is similarly constructed and equipped as the motor-driven surgical cutting and fastening instrument **10** described in connection with FIGS. **1-29**. Accordingly, for conciseness and clarity the details of operation and construction will not be repeated here. The end-effector **6006** may be used to compress, cut, or staple tissue. Referring now to FIG. **31**A, an end-effector **6030** may be positioned by a physician to surround tissue **6032** prior to compression, cutting, or stapling. As shown in FIG. **31**A, no compression may be applied to the tissue while preparing to use the end-effector. Referring now to FIG. **31**B, by engaging the handle (e.g., handle **6002**) of the endocutter, the physician may use the end-effector **6030** to compress the tissue **6032**. In one aspect, the tissue **6032** may be compressed to its maximum threshold, as shown in FIG. **31**B.

Referring to FIG. **32**A, various forces may be applied to the tissue **6032** by the end-effector **6030**. For example, vertical forces F**1** and F**2** may be applied by the anvil **6034** and the channel frame **6036** of the end-effector **6030** as tissue **6032** is compressed between the two. Referring now to FIG. **32**B, various diagonal and/or lateral forces also may be applied to the tissue **6032** when compressed by the end-effector **6030**. For example, force F**3** may be applied. For the purposes of operating a medical device such as endocutter **6000**, it may be desirable to sense or calculate the various forms of compression being applied to the tissue by the end-effector. For example, knowledge of vertical or lateral compression may allow the end-effector to more precisely or accurately apply a staple operation or may inform the operator of the endocutter such that the endocutter can be used more properly or safely.

The compression through tissue **6032** may be determined from an impedance of tissue **6032**. At various levels of compression, the impedance Z of tissue **6032** may increase or decrease. By applying a voltage V and a current I to the tissue **6032**, the impedance Z of the tissue **6032** may be determined at various levels of compression. For example, impedance Z may be calculated by dividing the applied voltage V by the current I.

Referring now to FIG. **33**, in one aspect, an RF electrode **6038** may be positioned on the end-effector **6030** (e.g., on a staple cartridge, knife, or channel frame of the end-effector **6030**). Further, an electrical contact **6040** may be positioned on the anvil **6034** of the end-effector **6030**. In one aspect, the electrical contact may be positioned on the channel frame of the end-effector. As the tissue **6032** is compressed between the anvil **6034** and, for example, the channel frame **6036** of the end-effector **6030**, an impedance Z of the tissue **6032** changes. The vertical tissue compression **6042** caused by the end-effector **6030** may be measured as a function of the impedance Z of the tissue **6032**.

Referring now to FIG. **34**, in one aspect, an electrical contact **6044** may be positioned on an opposite end of the anvil **6034** of the end-effector **6030** as the RF electrode **6038** is positioned. As the tissue **6032** is compressed between the anvil **6034** and, for example, the channel frame **6036** of the end-effector **6030**, an impedance Z of the tissue **6032** changes. The lateral tissue compression **6046** caused by the end-effector **6030** may be measured as a function of the impedance Z of the tissue **6032**.

Referring now to FIG. **35**, in one aspect, electrical contact **6050** may be positioned on the anvil **6034** and electrical contact **6052** may be positioned on an opposite end of the end-effector **6030** at channel frame **6036**. RF electrode **6048** may be positioned laterally to the central to the end-effector **6030**. As the tissue **6032** is compressed between the anvil **6034** and, for example, the channel frame **6036** of the end-effector **6030**, an impedance Z of the tissue **6032** changes. The lateral compression or angular compressions **6054** and **6056** on either side of the RF electrode **6048** may be caused by the end-effector **6030** and may be measured as a function of different impedances Z of the tissue **6032**, based on the relative positioning of the RF electrode **6048** and electrical contacts **6050** and **6052**.

In accordance with one or more of the techniques and features described in the present disclosure, and as discussed above, an RF electrode may be used as an RF sensor. Referring now to FIG. **36**, in one aspect, an RF sensor **6062** may be positioned on a staple cartridge **6060** inserted into a channel frame **6066** an end-effector. The RF electrode may run from a power line **6064** which may be powered by a power source in a handle (e.g., handle **6002**) of an endocutter.

Referring now to FIG. **37**, in one aspect, RF electrodes **6074** and **6076** may be positioned on a staple cartridge **6072** inserted into a channel frame **6078** of end-effector **6070**. As shown, RF electrode **6074** may be placed in a proximal position of the end-effector relative to an endocutter handle. Further, RF electrode **6076** may be placed in a distal position of the end-effector relative to the endocutter handle. RF electrodes **6074** and **6076** may be utilized to measure vertical, lateral, proximal, or distal compression at different points in a tissue based on the position of one or more electrical contacts on the end-effector.

Referring now to FIG. **38**, in one aspect, RF electrodes **6084-6116** may be positioned on staple cartridge **6082** inserted into the channel frame **6080** (or other component of an end-effector) based on various points for which compression information is desired. Referring now to FIG. **39**, in one aspect, RF electrodes **6122-6140** may be positioned on staple cartridge **6120** at discrete points for which compression information is desired. Referring now to FIG. **40**, RF electrodes **6152-6172** may be positioned at different points in multiple zones of a staple cartridge based on how accurate or precise the compression measurements should be. For example, RF electrodes **6152-6156** may be positioned in zone **6158** of staple cartridge **6150** depending on how accurate or precise the compression measurements in zone **6158** should be. Further, RF electrodes **6160-6164** may be positioned in zone **6166** of staple cartridge **6150** depending on how accurate or precise the compression measurements in zone **6166** should be. Additionally, RF electrodes **6168-6172** may be positioned in zone **6174** of staple cartridge **6150** depending on how accurate or precise the compression measurements in zone **6174** should be.

The RF electrodes discussed herein may be wired through a staple cartridge inserted in the channel frame. Referring now to FIG. **41**, in one aspect, an RF electrode may have a stamped "mushroom head" **6180** of about 1.0 mm in diameter. While the RF electrode may have the stamped "mushroom head" of about 1.0 mm in diameter, this is intended to be a non-limiting example and the RF electrode may be differently shaped and sized depending on each particular application or design. The RF electrode may be connected to, fastened to, or may form, a conductive wire **6182**. The conductive wire **182** may be about 0.5 mm in diameter, or may have a larger or smaller diameter based on a particular application or design. Further, the conductive wire may have an insulative coating **6184**. In one example, the RF electrode may protrude through a staple cartridge, channel frame, knife, or other component of an end-effector.

Referring now to FIG. **42**, the RF electrodes may be wired through a single wall or through multiple walls of a staple cartridge or channel frame of an end-effector. For example, RF electrodes **6190-6194** may be wired through wall **6196** of the staple cartridge or channel frame of an end-effector. One or more of wires **6198** may be connected to, fastened to, or be part of, RF electrodes **6190-6194** and may run through wall **6196** from a power source in, e.g., a handle of an endocutter.

Referring now to FIG. **43**, the power source may be in communication with the RF electrodes or may provide power to the RF electrodes through a wire or cable. The wire or cable may join each individual wire and lead to the power source. For example, RF electrodes **6204-6212** may receive power from a power source through wire or cable **6202**, which may run through staple cartridge **6200** or a channel frame of an end-effector. In one example, each of RF electrodes **6204-6212** may have its own wire that runs to or through wire or cable **6202**. The staple cartridge **6200** or channel frame also may include a controller **6214**, such as the controller **2006** shown in connection with FIG. **21**A, **21**B, or other controllers **2606** or **3017** shown in connection with FIGS. **27-29**, for example. It will be appreciated that the controller **6214** should be suitably sized to fit in the staple cartridge **6200** or channel frame form factor. Also, the controller

In various aspects, the tissue compression sensor system described herein for use with medical devices may include a frequency generator. The frequency generator may be located on a circuit board of the medical device, such as an endocutter. For example the frequency generator may be located on a circuit board in a shaft or handle of the endocutter. Referring now to FIG. **44**, an example circuit diagram **6220** in accordance with one example of the present disclosure is shown. As shown, frequency generator **6222** may receive power or current from a power source **6221** and may supply one or more RF signals to one or more RF electrodes **6224**. As discussed above, the one or more RF electrodes may be positioned at various locations or components on an end-effector or endocutter, such as a staple cartridge or channel frame. One or more electrical contacts, such as electrical contacts **6226** or **6228** may be positioned

on a channel frame or an anvil of an end-effector. Further, one or more filters, such as filters **6230** or **6232** may be communicatively coupled to the electrical contacts **6226** or **6228** as shown in FIG. **44**. The filters **6230** and **6232** may filter one or more RF signals supplied by the frequency generator **6222** before joining a single return path **6234**. A voltage V and a current I associated with the one or more RF signals may be used to calculate an impedance Z associated with a tissue that may be compressed and/or communicatively coupled between the one or more RF electrodes **6224** and the electrical contacts **6226** or **6228**.

Referring now to FIG. **45**, various components of the tissue compression sensor system described herein may be located in a handle **6236** of an endocutter. For example, as shown in circuit diagram **6220***a*, frequency generator **6222** may be located in the handle **6236** and receives power from power source **6221**. Also, current I**1** and current I**2** may be measured on a return path corresponding to electrical contacts **6228** and **6226**. Using a voltage V applied between the supply and return paths, impedances Z**1** and Z**2** may be calculated. Z**1** may correspond to an impedance of a tissue compressed and/or communicatively coupled between one or more of RF electrodes **6224** and electrical contact **6228**. Further, Z**2** may correspond to an impedance of a tissue compressed and/or communicatively coupled between one or more of RF electrodes **6224** and electrical contact **6226**. Applying the formulas Z**1**=V/I**1** and Z**2**=V/I**2**, impedances Z**1** and Z**2** corresponding to different compression levels of a tissue compressed by an end-effector may be calculated.

Referring now to FIG. **46**, one or more aspects of the present disclosure are described in circuit diagram **6250**. In an implementation, a power source at a handle **6252** of an endocutter may provide power to a frequency generator **6254**. The frequency generator **6254** may generate one or more RF signals. The one or more RF signals may be multiplexed or overlaid at a multiplexer **6256**, which may be in a shaft **6258** of the endocutter. In this way, two or more RF signals may be overlaid (or, e.g., nested or modulated together) and transmitted to the end-effector. The one or more RF signals may energize one or more RF electrodes **6260** at an end-effector **6262** (e.g., positioned in a staple cartridge) of the endocutter. A tissue (not shown) may be compressed and/or communicatively coupled between the one or more of RF electrodes **6260** and one or more electrical contacts. For example, the tissue may be compressed and/or communicatively coupled between the one or more RF electrodes **6260** and the electrical contact **6264** positioned in a channel frame of the end-effector **6262** or the electrical contact **6266** positioned in an anvil of the end-effector **6262**. A filter **6268** may be communicatively coupled to the electrical contact **6264** and a filter **6270** may be communicatively coupled to the electrical contact **6266**.

A voltage V and a current I associated with the one or more RF signals may be used to calculate an impedance Z associated with a tissue that may be compressed between the staple cartridge (and communicatively coupled to one or more RF electrodes **6260**) and the channel frame or anvil (and communicatively coupled to one or more of electrical contacts **6264** or **6266**).

In one aspect, various components of the tissue compression sensor system described herein may be located in a shaft **6258** of the endocutter. For example, as shown in circuit diagram **6250** (and in addition to the frequency generator **6254**), an impedance calculator **6272**, a controller **6274**, a non-volatile memory **6276**, and a communication channel **6278** may be located in the shaft **6258**. In one example, the frequency generator **6254**, impedance calculator **6272**, controller **6274**, non-volatile memory **6276**, and communication channel **6278** may be positioned on a circuit board in the shaft **6258**.

The two or more RF signals may be returned on a common path via the electrical contacts. Further, the two or more RF signals may be filtered prior to the joining of the RF signals on the common path to differentiate separate tissue impedances represented by the two or more RF signals. Current I**1** and current I**2** may be measured on a return path corresponding to electrical contacts **6264** and **6266**. Using a voltage V applied between the supply and return paths, impedances Z**1** and Z**2** may be calculated. Z**1** may correspond to an impedance of a tissue compressed and/or communicatively coupled between one or more of RF electrodes **6260** and electrical contact **6264**. Further, Z**2** may correspond to an impedance of the tissue compressed and/or communicatively coupled between one or more of RF electrodes **6260** and electrical contact **6266**. Applying the formulas Z**1**=V/I**1** and Z**2**=V/I**2**, impedances Z**1** and Z**2** corresponding to different compressions of a tissue compressed by an end-effector **6262** may be calculated. In example, the impedances Z**1** and Z**2** may be calculated by the impedance calculator **6272**. The impedances Z**1** and Z**2** may be used to calculate various compression levels of the tissue.

Referring now to FIG. **47**, a frequency graph **6290** is shown. The frequency graph **6290** shows a frequency modulation to nest two RF signals. The two RF signals may be nested before reaching RF electrodes at an end-effector as described above. For example, an RF signal with Frequency 1 and an RF signal with Frequency 2 may be nested together. Referring now to FIG. **48**, the resulting nested RF signal is shown in frequency graph **6300**. The compound signal shown in frequency graph **6300** includes the two RF signals of frequency graph **6290** compounded. Referring now to FIG. **49**, a frequency graph **6310** is shown. Frequency graph **6310** shows the RF signals with Frequencies **1** and **2** after being filtered (by, e.g., filters **6268** and **6270**). The resulting RF signals can be used to make separate impedance calculations or measurements on a return path, as described above.

In one aspect, filters **6268** and **6270** may be High Q filters such that the filter range may be narrow (e.g., Q=10). Q may be defined by the Center frequency (Wo)/Bandwidth (BW) where Q=Wo/BW. In one example, Frequency 1 may be 150 kHz and Frequency 2 may be 300 kHz. A viable impedance measurement range may be 100 kHz-20 MHz. In various examples, other sophisticated techniques, such as correlation, quadrature detection, etc., may be used to separate the RF signals.

Using one or more of the techniques and features described herein, a single energized electrode on a staple cartridge or an isolated knife of an end-effector may be used to make multiple tissue compression measurements simultaneously. If two or more RF signals are overlaid or multiplexed (or nested or modulated), they may be transmitted down a single power side of the end-effector and may return on either the channel frame or the anvil of the end-effector. If a filter were built into the anvil and channel contacts before they join a common return path, the tissue impedance represented by both paths could be differentiated. This may provide a measure of vertical tissue vs lateral tissue compression. This approach also may provide proximal and distal tissue compression depending on placement of the filters and location of the metallic return paths. A frequency generator and signal processor may be located on one or

more chips on a circuit board or a sub board (which may already exist in an endocutter).

The present disclosure will now be described in connection with various examples and combinations of such examples as set forth hereinbelow.

1. One example provides a tissue compression sensor system comprising: an RF electrode positioned on an end-effector; a first electrical contact positioned on one of an anvil or a channel frame of the end-effector; and a first filter communicatively coupled to the first electrical contact.

2. Another example provides the tissue compression sensor system of example 1, further comprising: a second electrical contact positioned on one of the anvil or the channel frame of the end-effector; and a second filter communicatively coupled to the second electrical contact.

3. Another example provides the tissue compression sensor system of example 2, further comprising: a multiplexor configured to transmit two or more RF signals to the end-effector.

4. Another example provides the compression sensor system of examples 2 or 3, wherein the first and second electrical contacts lead to a common return path.

5. Another example provides the tissue compression sensor system of examples 3 or 4, wherein the RF signals are transmitted down a single power side of the end-effector.

6. Another example provides the tissue compression sensor system of any one of examples 2-5, further comprising: an impedance calculator in communication with the first and second filters.

7. Another example provides the tissue compression sensor system of any one of examples 3-6, further comprising: a frequency generator configured to generate the two or more RF signals.

8. Another example provides the tissue compression sensor system of any one of examples 1-7, wherein the RF electrode is positioned on a staple cartridge of the end-effector.

9. Another example provides the tissue compression sensor any one of examples 1-8, further comprising: multiple RF electrodes positioned on the end-effector at discrete points.

10. Another example provides the tissue compression sensor system of any one of examples 1-9, further comprising: multiple RF electrodes positioned on the end-effector in multiple zones.

11. Yet another example provides a method for sensing tissue compression, the method comprising: overlaying two or more RF signals and transmitting the RF signals to an end-effector; returning the two or more RF signals on a common path via electrical contacts on at least one of an anvil or a channel frame of the end-effector; and filtering the two or more RF signals prior to joining the RF signals on the common path.

12. Another example provides the method of example 11, further comprising: calculating an impedance associated with a tissue compressed by the end-effector based on at least one of the two or more RF signals.

13. Another example provides the method of examples 11 or 12, wherein the two or more RF signals are overlaid via a multiplexor.

14. Another example provides the method of any one of examples 11-13, wherein the two or more RF signals are generated by a frequency generator outside the end-effector.

15. Another example provides the method of any one of examples 12-14, wherein a vertical tissue compression is calculated based on one of the RF signals and a lateral tissue compression is calculated based on another of the RF signals.

16. Another example provides the method of any one of examples 12-15, wherein a proximal tissue compression is calculated based on one of the RF signals and a distal tissue compression is calculated based on another of the RF signals.

17. Another example provides the method of any one of examples 11-16, wherein two or more filters are used to filter the two or more RF signals prior to joining the common return path to differentiate separate tissue impedances represented by the two or more RF signals.

18. Another example provides the method of any one of examples 14-17, wherein the frequency generator is located on a circuit board of a shaft or a handle of an endocutter.

In one aspect, the present disclosure provides an instrument **10** (described in connection with FIGS. **1-29**) configured with various sensing systems. Accordingly, for conciseness and clarity the details of operation and construction will not be repeated here. In one aspect, the sensing system includes a viscoelasticity/rate of change sensing system to monitor knife acceleration, rate of change of impedance, and rate of change of tissue contact. In one example, the rate of change of knife acceleration can be used as a measure of for tissue type. In another example, the rate of change of impedance can be measures with a pulse sensor ad can be employed as a measure for compressibility. Finally, the rate of change of tissue contact can be measured with a sensor based on knife firing rate to measure tissue flow.

The rate of change of a sensed parameter or stated otherwise, how much time is necessary for a tissue parameter to reach an asymptotic steady state value, is a separate measurement in itself and may be more valuable than the sensed parameter it was derived from. To enhance measurement of tissue parameters such as waiting a predetermined amount of time before making a measurement, the present disclosure provides a novel technique for employing the derivate of the measure such as the rate of change of the tissue parameter.

The derivative technique or rate of change measure becomes most useful with the understanding that there is no single measurement that can be employed alone to dramatically improve staple formation. It is the combination of multiple measurements that make the measurements valid. In the case of tissue gap it is helpful to know how much of the jaw is covered with tissue to make the gap measure relevant. Rate of change measures of impedance may be combined with strain measurements in the anvil to relate force and compression applied to the tissue grasped between the jaw members of the end effector such as the anvil and the staple cartridge. The rate of change measure can be employed by the endosurgical device to determine the tissue type and not merely the tissue compression. Although stomach and lung tissue sometimes have similar thicknesses, and even similar compressive properties when the lung tissue is calcified, an instrument may be able to distinguish these tissue types by employing a combination of measurements such as gap, compression, force applied, tissue contact area, and rate of change of compression or rate of change of gap. If any of these measurements were used alone, the endosurgical it may be difficult for the endosurgical device to distinguish one tissue type form another. Rate of change of compression also may be helpful to enable the device to determine if the tissue is "normal" or if some abnormality exists. Measuring not only how much time has passed but the variation of the sensor signals and determining the

derivative of the signal would provide another measurement to enable the endosurgical device to measure the signal. Rate of change information also may be employed in determining when a steady state has been achieved to signal the next step in a process. For example, after clamping the tissue between the jaw members of the end effector such as the anvil and the staple cartridge, when tissue compression reaches a steady state (e.g., about 15 seconds), an indicator or trigger to start firing the device can be enabled.

Also provided herein are methods, devices, and systems for time dependent evaluation of sensor data to determine stability, creep, and viscoelastic characteristics of tissue during surgical instrument operation. A surgical instrument **10**, such as the stapler illustrated in FIG. **1**, can include a variety of sensors for measuring operational parameters, such as jaw gap size or distance, firing current, tissue compression, the amount of the jaw that is covered by tissue, anvil strain, and trigger force, to name a few. These sensed measurements are important for automatic control of the surgical instrument and for providing feedback to the clinician.

The examples shown in connection with FIGS. **30-49** may be employed to measure the various derived parameters such as gap distance versus time, tissue compression versus time, and anvil strain versus time. Motor current may be monitored employing the current sensor **2312** in series with the battery **2308** as described in connection with FIG. **24**, the current sensor **2412** in series with the battery **2408** shown in FIG. **25**, or the current sensor **3026** in FIG. **29**.

Turning now to FIG. **50**, a motor-driven surgical cutting and fastening instrument **8010** is depicted that may or may not be reused. The motor-driven surgical cutting and fastening instrument **8010** is similarly constructed and equipped as the motor-driven surgical cutting and fastening instrument **10** described in connection with FIGS. **1-29**. In the example illustrated in FIG. **50**, the instrument **8010** includes a housing **8012** that comprises a handle assembly **8014** that is configured to be grasped, manipulated and actuated by the clinician. The housing **8012** is configured for operable attachment to an interchangeable shaft assembly **8200** that has a surgical end effector **8300** operably coupled thereto that is configured to perform one or more surgical tasks or procedures. Since the motor-driven surgical cutting and fastening instrument **8010** is similarly constructed and equipped as the motor-driven surgical cutting and fastening instrument **10** (FIGS. **1-4**) described in connection with FIGS. **1-29**, for conciseness and clarity the details of operation and construction will not be repeated here.

The housing **8012** depicted in FIG. **50** is shown in connection with an interchangeable shaft assembly **8200** that includes an end effector **8300** that comprises a surgical cutting and fastening device that is configured to operably support a surgical staple cartridge **8304** therein. The housing **8012** may be configured for use in connection with interchangeable shaft assemblies that include end effectors that are adapted to support different sizes and types of staple cartridges, have different shaft lengths, sizes, and types, etc. In addition, the housing **8012** also may be effectively employed with a variety of other interchangeable shaft assemblies including those assemblies that are configured to apply other motions and forms of energy such as, for example, radio frequency (RF) energy, ultrasonic energy and/or motion to end effector arrangements adapted for use in connection with various surgical applications and procedures. Furthermore, the end effectors, shaft assemblies, handles, surgical instruments, and/or surgical instrument systems can utilize any suitable fastener, or fasteners, to fasten tissue. For instance, a fastener cartridge comprising a plurality of fasteners removably stored therein can be removably inserted into and/or attached to the end effector of a shaft assembly.

FIG. **50** illustrates the surgical instrument **8010** with an interchangeable shaft assembly **8200** operably coupled thereto. In the illustrated arrangement, the handle housing forms a pistol grip portion **8019** that can be gripped and manipulated by the clinician. The handle assembly **8014** operably supports a plurality of drive systems therein that are configured to generate and apply various control motions to corresponding portions of the interchangeable shaft assembly that is operably attached thereto. Trigger **8032** is operably associated with the pistol grip for controlling various of these control motions.

With continued reference to FIG. **50**, the interchangeable shaft assembly **8200** includes a surgical end effector **8300** that comprises an elongated channel **8302** that is configured to operably support a staple cartridge **8304** therein. The end effector **8300** may further include an anvil **8306** that is pivotally supported relative to the elongated channel **8302**.

The inventors have discovered that derived parameters can be even more useful for controlling a surgical instrument, such as the instrument illustrated in FIG. **50**, than the sensed parameter(s) upon which the derived parameter is based. Non-limiting examples of derived parameters include the rate of change of a sensed parameter (e.g., jaw gap distance) and how much time elapses before a tissue parameter reaches an asymptotic steady state value (e.g., 15 seconds). Derived parameters, such as rate of change, are particularly useful because they dramatically improve measurement accuracy and also provide information not otherwise evident directly from sensed parameters. For example, impedance (i.e., tissue compression) rate of change can be combined with strain in the anvil to relate compression and force, which enables the microcontroller to determine the tissue type and not merely the amount of tissue compression. This example is illustrative only, and any derived parameters can be combined with one or more sensed parameters to provide more accurate information about tissue types (e.g., stomach vs. lung), tissue health (calcified vs. normal), and operational status of the surgical device (e.g., clamping complete). Different tissues have unique viscoelastic properties and unique rates of change, making these and other parameters discussed herein useful indicia for monitoring and automatically adjusting a surgical procedure.

FIGS. **52**A-**52**E show exemplary sensed parameters as well as parameters derived therefrom. FIG. **52**A is an illustrative graph showing gap distance over time, where the gap is the space between the jaws being occupied by clamped tissue. The vertical (y) axis is distance and the horizontal (x) axis is time. Specifically, referring to FIGS. **50** and **51**, the gap distance **8040** is the distance between the anvil **8306** and the elongate channel **8302** of the end effector. In the open jaw position, at time zero, the gap **8040** between the anvil **8306** and the elongate member is at its maximum distance. The width of the gap **8040** decreases as the anvil **8306** closes, such as during tissue clamping. The gap distance rate of change can vary because tissue has non-uniform resiliency. For example, certain tissue types may initially show rapid compression, resulting in a faster rate of change. However, as tissue is continually compressed, the viscoelastic properties of the tissue can cause the rate of change to decrease until the tissue cannot be compressed further, at which point the gap distance will remain substantially constant. The gap decreases over time as the tissue is squeezed between the anvil **8306** and the staple cartridge

8304 of the end effector 8040. The one or more sensors described in connection with FIGS. 30-49 and 55 such as, for example, a magnetic field sensor, a strain gauge, a pressure sensor, a force sensor, an inductive sensor such as, for example, an eddy current sensor, a resistive sensor, a capacitive sensor, an optical sensor, and/or any other suitable sensor, may be adapted and configured to measure the gap distance "d" between the anvil 8306 and the staple cartridge 8304 over time "t" as represented graphically in FIG. 52A. The rate of change of the gap distance "d" over time "t" is the Slope of the curve shown in FIG. 52A, where Slope=Δd/Δt.

FIG. 52B is an illustrative graph showing firing current of the end effector jaws. The vertical (y) axis is current and the horizontal (x) axis is time. As discussed herein, the surgical instrument and/or the microcontroller, as shown in FIGS. 21-29, thereof can include a current sensor that detects the current utilized during various operations, such as clamping, cutting, and/or stapling tissue. For example, when tissue resistance increases, the instrument's electric motor can require more current to clamp, cut, and/or staple the tissue. Similarly, if resistance is lower, the electric motor can require less current to clamp, cut, and/or staple the tissue. As a result, firing current can be used as an approximation of tissue resistance. The sensed current can be used alone or more preferably in conjunction with other measurements to provide feedback about the target tissue. Referring still to FIG. 52B, during some operations, such as stapling, firing current initially is high at time zero but decreases over time. During other device operations, current may increase over time if the motor draws more current to overcome increasing mechanical load. In addition, the rate of change of firing current is can be used as an indicator that the tissue is transitioning from one state to another state. Accordingly, firing current and, in particular, the rate of change of firing current can be used to monitor device operation. The firing current decreases over time as the knife cuts through the tissue. The rate of change of firing current can vary if the tissue being cut provides more or less resistance due to tissue properties or sharpness of the knife 8305 (FIG. 51). As the cutting conditions vary, the work being done by the motor varies and hence will vary the firing current over time. A current sensor may be may be employed to measure the firing current over time while the knife 8305 is firing as represented graphically in FIG. 52B. For example, the motor current may be monitored employing the current sensor 2312 in series with the battery 2308 as described in connection with FIG. 24, the current sensor 2412 in series with the battery 2408 shown in FIG. 25, or the current sensor 3026 shown in FIG. 29. The current sensors 2312, 2314, 3026 may be adapted and configured to measure the motor firing current "i" over time "t" as represented graphically in FIG. 52B. The rate of change of the firing current "i" over time "t" is the Slope of the curve shown in FIG. 52B, where Slope=Δi/Δt.

FIG. 52C is an illustrative graph of impedance over time. The vertical (y) axis is impedance and the horizontal (x) axis is time. At time zero, impedance is low but increases over time as tissue pressure increases under manipulation (e.g., clamping and stapling). The rate of change varies over time as because as the tissue between the anvil 8306 and the staple cartridge 8304 of the end effector 8040 is severed by the knife or is sealed using RF energy between electrodes located between the anvil 8306 and the staple cartridge 8304 of the end effector 8040. For example, as the tissue is cut the electrical impedance increases and reaches infinity when the tissue is completely severed by the knife. Also, if the end effector 8040 includes electrodes coupled to an RF energy source, the electrical impedance of the tissue increases as energy is delivered through the tissue between the anvil 8306 and the staple cartridge 8304 of the end effector 8040. The electrical impedance increase as the energy through the tissue dries out the tissue by vaporizing moistures in the tissue. Eventually, when a suitable amount of energy is delivered to the tissue, the impedance increases to a very high value or infinity when the tissue is severed. In addition, as illustrated in FIG. 52C, different tissues can have unique compression properties, such as rate of compression, that distinguish tissues. The tissue impedance can be measured by driving a sub-therapeutic RF current through the tissue grasped between the first and second jaw members 9014, 9016. One or more electrodes can be positioned on either or both the anvil 8306 and the staple cartridge 8304. The tissue compression/impedance of the tissue between the anvil 8306 and the staple cartridge 8304 can be measured over time as represented graphically in FIG. 52C. The sensors described in connection with FIGS. 30-49 and 55 such as, for example, a magnetic field sensor, a strain gauge, a pressure sensor, a force sensor, an inductive sensor such as, for example, an eddy current sensor, a resistive sensor, a capacitive sensor, an optical sensor, and/or any other suitable sensor, may be adapted and configured to measure tissue compression/impedance. The sensors may be adapted and configured to measure tissue impedance "Z" over time "t" as represented graphically in FIG. 52C. The rate of change of the tissue impedance "Z" over time "t" is the Slope of the curve shown in FIG. 78C, where Slope=ΔZ/Δt.

FIG. 52D is an illustrative graph of anvil 8306 (FIGS. 50, 51) strain over time. The vertical (y) axis is strain and the horizontal (x) axis is time. During stapling, for example, anvil 8306 strain initially is high but decreases as the tissue reaches a steady state and exerts less pressure on the anvil 8306. The rate of change of anvil 8306 strain can be measured by a pressure sensor or strain gauge positioned on either or both the anvil 8306 and the staple cartridge 8304 (FIGS. 50, 51) to measure the pressure or strain applied to the tissue grasped between the anvil 8306 and the staple cartridge 8304. The anvil 8306 strain can be measured over time as represented graphically in FIG. 52D. The rate of change of strain "S" over time "t" is the Slope of the curve shown in FIG. 52D, where Slope=ΔS/Δt.

FIG. 52E is an illustrative graph of trigger force over time. The vertical (y) axis is trigger force and the horizontal (x) axis is time. In certain examples, trigger force is progressive, to provide the clinician tactile feedback. Thus, at time zero, trigger 8020 (FIG. 50) pressure may be at its lowest and trigger pressure may increase until completion of an operation (e.g., clamping, cutting, or stapling). The rate of change trigger force can be measured by a pressure sensor or strain gauge positioned on the trigger 8032 of the handle 8019 of the instrument 8010 (FIG. 50) to measure the force required to drive the knife 8305 (FIG. 51) through the tissue grasped between the anvil 8306 and the staple cartridge 8304. The trigger 8032 force can be measured over time as represented graphically in FIG. 52E. The rate of change of strain trigger force "F" over time "t" is the Slope of the curve shown in FIG. 52E, where Slope=ΔF/Δt.

For example, stomach and lung tissue can be differentiated even though these tissue can have similar thicknesses, and can have similar compressive properties if the lung tissue is calcified. Stomach and lung tissues can be distinguished by analyzing jaw gap distance, tissue compression, force applied, tissue contact area, compression rate of change, and jaw gap rate of change. For example, FIG. 53

shows a graph of tissue pressure "P" versus tissue displacement for various tissues. The vertical (y) axis is tissue pressure and the horizontal (x) axis is tissue displacement. When tissue pressure reaches a predetermined threshold, such as 50-100 pounds per square inch (psi), the amount of tissue displacement as well as the rate of tissue displacement before reaching the threshold can be used to differentiate tissues. For instance, blood vessel tissue reaches the predetermined pressure threshold with less tissue displacement and with a faster rate of change than colon, lung, or stomach tissue. In addition, the rate of change (tissue pressure over displacement) for blood vessel tissue is nearly asymptotic at a threshold of 50-100 psi, whereas the rate of change for colon, lung, and stomach is not asymptotic at a threshold of 50-100 psi. As will be appreciated, any pressure threshold can be used such as, for example, between 1 and 1000 psi, more preferably between 10 and 500 psi, and more preferably still between 50 and 100 psi. In addition, multiple thresholds or progressive thresholds can be used to provide further resolution of tissue types that have similar viscoelastic properties.

Compression rate of change also can enable the microcontroller to determine if the tissue is "normal" or if some abnormality exists, such as calcification. For example, referring to FIG. **54**, compression of calcified lung tissue follows a different curve than compression of normal lung tissue. Tissue displacement and rate of change of tissue displacement therefore can be used to diagnose and/or differentiate calcified lung tissue from normal lung tissue.

In addition, certain sensed measurements may benefit from additional sensory input. For example, in the case of jaw gap, knowing how much of the jaw is covered with tissue can make the gap measurement more useful and accurate. If a small portion of the jaw is covered in tissue, tissue compression may appear to be less than if the entire jaw is covered in tissue. Thus, the amount of jaw coverage can be taken into account by the microcontroller when analyzing tissue compression and other sensed parameters.

In certain circumstances, elapsed time also can be an important parameter. Measuring how much time has passed, together with sensed parameters, and derivative parameters (e.g., rate of change) provides further useful information. For example, if jaw gap rate of change remains constant after a set period of time (e.g., 5 seconds), then the parameter may have reached its asymptotic value.

Rate of change information also is useful in determining when a steady state has been achieved, thus signaling a next step in a process. For example, during clamping, when tissue compression reaches a steady state—e.g., no significant rate of change occurs after a set period of time—the microcontroller can send a signal to the display alerting the clinician to start the next step in the operation, such as staple firing. Alternatively, the microcontroller can be programmed to automatically start the next stage of operation (e.g., staple firing) once a steady state is reached.

Similarly, impedance rate of change can be combined with strain in the anvil to relate force and compression. The rate of change would allow the device to determine the tissue type rather than merely measure the compression value. For example, stomach and lung sometimes have similar thicknesses, and even similar compressive properties if the lung is calcified.

The combination of one or more sensed parameters with derived parameters provides more reliable and accurate assessment of tissue types and tissue health, and allows for better device monitoring, control, and clinician feedback.

Turning now to FIG. **55**, the end effector **9012** is one aspect of the end effector **8300** (FIG. **50**) that may be adapted to operate with surgical instrument **8010** (FIG. **50**) to measure the various derived parameters such as gap distance versus time, tissue compression versus time, and anvil strain versus time. Accordingly, the end effector **9012** shown in FIG. **55** may include one or more sensors configured to measure one or more parameters or characteristics associated with the end effector **9012** and/or a tissue section captured by the end effector **9012**. In the example illustrated in FIG. **55**, the end effector **9012** comprises a first sensor **9020** and a second sensor **9026**. In various examples, the first sensor **9020** and/or the second sensor **9026** may comprise, for example, a magnetic sensor such as, for example, a magnetic field sensor, a strain gauge, a pressure sensor, a force sensor, an inductive sensor such as, for example, an eddy current sensor, a resistive sensor, a capacitive sensor, an optical sensor, and/or any other suitable sensor for measuring one or more parameters of the end effector **9012**.

In certain instances, the first sensor **9020** and/or the second sensor **9026** may comprise, for example, a magnetic field sensor embedded in the first jaw member **9014** and configured to detect a magnetic field generated by a magnet **9024** embedded in the second jaw member **9016** and/or the staple cartridge **9018**. The strength of the detected magnetic field may correspond to, for example, the thickness and/or fullness of a bite of tissue located between the jaw members **9014**, **9016**. In certain instances, the first sensor **9020** and/or the second sensor **9026** may comprise a strain gauge, such as, for example, a micro-strain gauge, configured to measure the magnitude of the strain in the anvil **9014** during a clamped condition. The strain gauge provides an electrical signal whose amplitude varies with the magnitude of the strain.

In some aspects, one or more sensors of the end effector **9012** such as, for example, the first sensor **9020** and/or the second sensor **9026** may comprise a pressure sensor configured to detect a pressure generated by the presence of compressed tissue between the jaw members **9014**, **9016**. In some examples, one or more sensors of the end effector **9012** such as, for example, the first sensor **9020** and/or the second sensor **9026** are configured to detect the impedance of a tissue section located between the jaw members **9014**, **9016**. The detected impedance may be indicative of the thickness and/or fullness of tissue located between the jaw members **9014**, **9016**.

In one aspect, one or more of the sensors of the end effector **9012** such as, for example, the first sensor **9012** is configured to measure the gap **9022** between the anvil **9014** and the second jaw member **9016**. In certain instances, the gap **9022** can be representative of the thickness and/or compressibility of a tissue section clamped between the jaw members **9014**, **9016**. In at least one example, the gap **9022** can be equal, or substantially equal, to the thickness of the tissue section clamped between the jaw members **9014**, **9016**. In one example, one or more of the sensors of the end effector **9012** such as, for example, the first sensor **9020** is configured to measure one or more forces exerted on the anvil **9014** by the second jaw member **9016** and/or tissue clamped between the anvil **9014** and the second jaw member **9016**. The forces exerted on the anvil **9014** can be representative of the tissue compression experienced by the tissue section captured between the jaw members **9014**, **9016**. In one embodiment, the gap **9022** between the anvil **9014** and the second jaw member **9016** can be measured by positioning a magnetic field sensor on the anvil **9014** and positioning a magnet on the second jaw member **9016** such that the gap

9022 is proportional to the signal detected by the magnetic field sensor and the signal is proportional to the distance between the magnet and the magnetic field sensor. It will be appreciated that the location of the magnetic field sensor and the magnet may be swapped such that the magnetic field sensor is positioned on the second jaw member **9016** and the magnet is placed on the anvil **9014**.

One or more of the sensors such as, for example, the first sensor **9020** and/or the second sensor **9026** may be measured in real-time during a clamping operation. Real-time measurement allows time based information to be analyzed, for example, by a processor, and used to select one or more algorithms and/or look-up tables for the purpose of assessing, in real-time, a manual input of an operator of the surgical instrument **9010**. Furthermore, real-time feedback can be provided to the operator to assist the operator in calibrating the manual input to yield a desired output.

The present disclosure will now be described in connection with various examples and combinations of such examples as set forth hereinbelow.

1. One example provides a powered surgical cutting and stapling instrument comprising: at least one sensor to measure at least one parameter associated with the instrument at least one processor; and a memory operatively associated with the processor, the memory including machine executable instructions that when executed by the processor cause the processor to: monitor the at least one sensor over a predetermined time period; and determine a rate of change of the measured parameter.

2. Another example provides the powered surgical cutting and stapling instrument of example 1, comprising an end effector comprising a first jaw member and a second jaw member, wherein at least one of the first and second jaw members is movable relative to the other jaw member, and wherein the at least one sensor is positioned on at least one of the first and second jaw members.

3. Another example provides the powered surgical cutting and stapling instrument of example 2, further comprising: a magnet positioned on the first jaw member; a magnetic field sensor, wherein the magnetic field sensor is coupled to the processor and the processor is configured to determine a gap distance between the first and second jaw members based on a signal received form the magnetic field sensor, where in the signal from the magnetic field sensor is proportional to the gap distance between the magnet and the magnetic field sensor, wherein the processor is configured to monitor the gap distance over the predetermined time period to determined the rate of change of the gap over the predetermined time period.

4. Another example provides the powered surgical cutting and stapling instrument of examples 2 or 3, further comprising: a knife channel defined in at least one of the first or second jaw members, wherein the channel is configured to translate a knife therealong; a knife configured to translate along the knife channel; a motor operatively coupled to the knife to advance and retract the knife along the knife channel; and a current sensor configured to measure current draw of the motor while the motor advances the knife to cut tissue grasped between the first and second jaw members; wherein the processor is configured to receive a signal from the current sensor over the predetermined time period, wherein the signal is representative of the current draw of the motor while advances the knife through the tissue; and wherein the processor is configured to determine a rate of change of the current draw of the motor while the motor advances the knife through the tissue over the predetermined period.

5. Another example provides the powered surgical instrument of any one of examples 2-4, further comprising a force sensor positioned in at least one of the first or second jaw members to measure compression of tissue grasped between the first and second jaw members, wherein the processor is configured to receive a signal from the force sensor over the predetermined time period, wherein the signal is representative of the tissue compression, and wherein the processor is configured to determine a rate of change of tissue compression over the predetermined period.

6. Another example provides the powered surgical instrument of any one of examples 2-5, further comprising at least one electrode coupled to a sub-therapeutic radio frequency (RF) energy source configured to drive a low energy level RF signal through tissue grasped between the first and second jaw members to measure electrical impedance of the tissue; wherein the processor is configured to receive a signal from the at least one electrode over the predetermined time period, wherein the signal is representative of the tissue impedance, and wherein the processor is configured to determine a rate of change of the tissue impedance over the predetermined period.

7. Another example provides the powered surgical instrument of any one of examples 2-6, further comprising a strain gauge positioned in a movable jaw member of the first or second jaw members to measure strain of the jaw member when tissue is grasped between the first and second jaw members, wherein the processor is configured to receive a signal from the strain gauge over the predetermined time period, wherein the signal is representative of the strain of the movable jaw member, and wherein the processor is configured to determine a rate of change of the strain over the predetermined period.

8. Another example provides the powered surgical cutting and stapling instrument of any one of examples 1-7, comprising: a handle; a trigger movable relative to the handle; and a pressure sensor or strain gauge positioned on the movable trigger; wherein the processor is configured to receive a signal from the strain gauge over the predetermined time period, wherein the signal is representative of the force applied to the movable trigger, and wherein the processor is configured to determine a rate of change of the force over the predetermined period.

9. Yet another example provides a powered surgical cutting and stapling instrument comprising: an end effector comprising a first jaw member and a second jaw member, wherein at least one of the first and second jaw members is movable relative to the other jaw member, and wherein the at least one sensor is positioned on at least one of the first and second jaw members. a pressure sensor or strain gauge positioned in at least one of the first or second jaw members; at least one processor; a memory operatively associated with the processor, the memory including machine executable instructions that when executed by the processor cause the processor to: monitor the pressure applied to tissue grasped between the first and second jaw members; and determine a type of tissue grasped between the first and second jaw members based on the tissue pressure measurement.

10. Another example provides the powered surgical instrument of example 9, wherein the processor is configured to determine tissue displacement by measuring tissue pressure along a first axis and along a second axis, wherein the first and second axes are transverse relative to each other.

11. Another example provides the powered surgical instrument of example 10, wherein when tissue pressure reaches a predetermined threshold, the amount of tissue

displacement as well as the rate of the tissue displacement before reaching the threshold to differentiate tissue types.

12. Another example provides the powered surgical instrument of examples 10 or 11, wherein the processor is configured to determine tissue displacement based on multiple thresholds or progressive thresholds to provide higher resolution of tissue types with similar viscoelastic properties.

13. Yet another example provides a powered surgical cutting and stapling instrument comprising: an end effector comprising a first jaw member and a second jaw member, wherein at least one of the first and second jaw members is movable relative to the other jaw member, and wherein the at least one sensor is positioned on at least one of the first and second jaw members; a pressure sensor or strain gauge positioned in at least one of the first or second jaw members; a gap sensor to measure a gap distance between the first and second jaw members; at least one processor; a memory operatively associated with the processor, the memory including machine executable instructions that when executed by the processor cause the processor to: monitor the pressure applied to tissue grasped between the first and second jaw members; monitor the gap distance between the first and second jaw members; and determine a type of tissue grasped between the first and second jaw members based on the tissue pressure and the gap distance measurement.

14. Another example provides the powered surgical cutting and stapling instrument of example 13, wherein the pressure and gap distance measurements are used by the processor to determine an amount tissue grasped between the first and second jaw members.

15. Another example provides the powered surgical cutting and stapling instrument of example 14, wherein when a small portion of the first and second jaw members are covered in tissue, the processor is configured to compensate tissue compression measurements.

16. Another example provides the powered surgical cutting and stapling instrument of example 14 or 15, wherein the processor is configured to determine elapsed time in conjunction with pressure and gap distance measurements to determine a derivative parameter

17. Another example provides the powered surgical cutting and stapling instrument of example 16, wherein the processor is configured to determine that a measured parameter has reached an asymptotic value when a rate of change remains constant after a set period of time.

18. Another example provides the powered surgical cutting and stapling instrument of examples 16 or 17, wherein the processor employs rate of change information to determine when a steady state has been achieved and thereby signaling a next step in a process.

19. Another example provides the powered surgical cutting and stapling instrument of example 18, wherein the processor is configured to send a signal to a display alerting a user of the instrument to start a next step in the process or the processor is configured to automatically start the next step of the process once a steady state is reached.

20. Another example provides the powered surgical cutting and stapling instrument of any one of examples 16-19, wherein the processor is configured to combine impedance rate of change with strain in at least one of the first ands second jaw members to relate force and compression.

In accordance with various examples, the surgical instruments described herein may comprise one or more processors (e.g., microprocessor, microcontroller) coupled to various sensors. In addition, to the processor(s), a storage (having operating logic) and communication interface, are coupled to each other.

As described earlier, the sensors may be configured to detect and collect data associated with the surgical device. The processor processes the sensor data received from the sensor(s).

The processor may be configured to execute the operating logic. The processor may be any one of a number of single or multi-core processors known in the art. The storage may comprise volatile and non-volatile storage media configured to store persistent and temporal (working) copy of the operating logic.

In various aspects, the operating logic may be configured to perform the initial processing, and transmit the data to the computer hosting the application to determine and generate instructions. For these examples, the operating logic may be further configured to receive information from and provide feedback to a hosting computer. In alternate examples, the operating logic may be configured to assume a larger role in receiving information and determining the feedback. In either case, whether determined on its own or responsive to instructions from a hosting computer, the operating logic may be further configured to control and provide feedback to the user.

In various aspects, the operating logic may be implemented in instructions supported by the instruction set architecture (ISA) of the processor, or in higher level languages and compiled into the supported ISA. The operating logic may comprise one or more logic units or modules. The operating logic may be implemented in an object oriented manner. The operating logic may be configured to be executed in a multi-tasking and/or multi-thread manner. In other examples, the operating logic may be implemented in hardware such as a gate array.

In various aspects, the communication interface may be configured to facilitate communication between a peripheral device and the computing system. The communication may include transmission of the collected biometric data associated with position, posture, and/or movement data of the user's body part(s) to a hosting computer, and transmission of data associated with the tactile feedback from the host computer to the peripheral device. In various examples, the communication interface may be a wired or a wireless communication interface. An example of a wired communication interface may include, but is not limited to, a Universal Serial Bus (USB) interface. An example of a wireless communication interface may include, but is not limited to, a Bluetooth interface.

For various aspects, the processor may be packaged together with the operating logic. In various examples, the processor may be packaged together with the operating logic to form a SiP. In various examples, the processor may be integrated on the same die with the operating logic. In various examples, the processor may be packaged together with the operating logic to form a System on Chip (SoC).

Various aspects may be described herein in the general context of computer executable instructions, such as software, program modules, and/or engines being executed by a processor. Generally, software, program modules, and/or engines include any software element arranged to perform particular operations or implement particular abstract data types. Software, program modules, and/or engines can include routines, programs, objects, components, data structures and the like that perform particular tasks or implement particular abstract data types. An implementation of the software, program modules, and/or engines components and

techniques may be stored on and/or transmitted across some form of computer-readable media. In this regard, computer-readable media can be any available medium or media useable to store information and accessible by a computing device. Some examples also may be practiced in distributed computing environments where operations are performed by one or more remote processing devices that are linked through a communications network. In a distributed computing environment, software, program modules, and/or engines may be located in both local and remote computer storage media including memory storage devices. A memory such as a random access memory (RAM) or other dynamic storage device may be employed for storing information and instructions to be executed by the processor. The memory also may be used for storing temporary variables or other intermediate information during execution of instructions to be executed by the processor.

Although some aspects may be illustrated and described as comprising functional components, software, engines, and/or modules performing various operations, it can be appreciated that such components or modules may be implemented by one or more hardware components, software components, and/or combination thereof. The functional components, software, engines, and/or modules may be implemented, for example, by logic (e.g., instructions, data, and/or code) to be executed by a logic device (e.g., processor). Such logic may be stored internally or externally to a logic device on one or more types of computer-readable storage media. In other examples, the functional components such as software, engines, and/or modules may be implemented by hardware elements that may include processors, microprocessors, circuits, circuit elements (e.g., transistors, resistors, capacitors, inductors, and so forth), integrated circuits, ASICs, PLDs, DSPs, FPGAs, logic gates, registers, semiconductor device, chips, microchips, chip sets, and so forth.

Examples of software, engines, and/or modules may include software components, programs, applications, computer programs, application programs, system programs, machine programs, operating system software, middleware, firmware, software modules, routines, subroutines, functions, methods, procedures, software interfaces, application program interfaces (API), instruction sets, computing code, computer code, code segments, computer code segments, words, values, symbols, or any combination thereof. Determining whether one example is implemented using hardware elements and/or software elements may vary in accordance with any number of factors, such as desired computational rate, power levels, heat tolerances, processing cycle budget, input data rates, output data rates, memory resources, data bus speeds and other design or performance constraints.

One or more of the modules described herein may comprise one or more embedded applications implemented as firmware, software, hardware, or any combination thereof. One or more of the modules described herein may comprise various executable modules such as software, programs, data, drivers, application APIs, and so forth. The firmware may be stored in a memory of the controller and/or the controller which may comprise a nonvolatile memory (NVM), such as in bit-masked ROM or flash memory. In various implementations, storing the firmware in ROM may preserve flash memory. The NVM may comprise other types of memory including, for example, programmable ROM (PROM), erasable programmable ROM (EPROM), EEPROM, or battery backed RAM such as dynamic RAM (DRAM), Double-Data-Rate DRAM (DDRAM), and/or synchronous DRAM (SDRAM).

In some cases, various aspects may be implemented as an article of manufacture. The article of manufacture may include a computer readable storage medium arranged to store logic, instructions and/or data for performing various operations of one or more examples. In various examples, for example, the article of manufacture may comprise a magnetic disk, optical disk, flash memory or firmware containing computer program instructions suitable for execution by a general purpose processor or application specific processor. The examples, however, are not limited in this context.

The functions of the various functional elements, logical blocks, modules, and circuits elements described in connection with the examples disclosed herein may be implemented in the general context of computer executable instructions, such as software, control modules, logic, and/or logic modules executed by the processing unit. Generally, software, control modules, logic, and/or logic modules comprise any software element arranged to perform particular operations. Software, control modules, logic, and/or logic modules can comprise routines, programs, objects, components, data structures and the like that perform particular tasks or implement particular abstract data types. An implementation of the software, control modules, logic, and/or logic modules and techniques may be stored on and/or transmitted across some form of computer-readable media. In this regard, computer-readable media can be any available medium or media useable to store information and accessible by a computing device. Some examples also may be practiced in distributed computing environments where operations are performed by one or more remote processing devices that are linked through a communications network. In a distributed computing environment, software, control modules, logic, and/or logic modules may be located in both local and remote computer storage media including memory storage devices.

Additionally, it is to be appreciated that the aspects described herein illustrate example implementations, and that the functional elements, logical blocks, modules, and circuits elements may be implemented in various other ways which are consistent with the described examples. Furthermore, the operations performed by such functional elements, logical blocks, modules, and circuits elements may be combined and/or separated for a given implementation and may be performed by a greater number or fewer number of components or modules. As will be apparent to those of skill in the art upon reading the present disclosure, each of the individual examples described and illustrated herein has discrete components and features which may be readily separated from or combined with the features of any of the other several aspects without departing from the scope of the present disclosure. Any recited method can be carried out in the order of events recited or in any other order which is logically possible.

It is worthy to note that any reference to "one example" or "an example" means that a particular feature, structure, or characteristic described in connection with the example is comprised in at least one example. The appearances of the phrase "in one example" or "in one aspect" in the specification are not necessarily all referring to the same example.

Unless specifically stated otherwise, it may be appreciated that terms such as "processing," "computing," "calculating," "determining," or the like, refer to the action and/or processes of a computer or computing system, or similar electronic computing device, such as a general purpose

processor, a DSP, ASIC, FPGA or other programmable logic device, discrete gate or transistor logic, discrete hardware components, or any combination thereof designed to perform the functions described herein that manipulates and/or transforms data represented as physical quantities (e.g., electronic) within registers and/or memories into other data similarly represented as physical quantities within the memories, registers or other such information storage, transmission or display devices.

It is worthy to note that some aspects may be described using the expression "coupled" and "connected" along with their derivatives. These terms are not intended as synonyms for each other. For example, some aspects may be described using the terms "connected" and/or "coupled" to indicate that two or more elements are in direct physical or electrical contact with each other. The term "coupled," however, also may mean that two or more elements are not in direct contact with each other, but yet still co-operate or interact with each other. With respect to software elements, for example, the term "coupled" may refer to interfaces, message interfaces, API, exchanging messages, and so forth.

It should be appreciated that any patent, publication, or other disclosure material, in whole or in part, that is said to be incorporated by reference herein is incorporated herein only to the extent that the incorporated material does not conflict with existing definitions, statements, or other disclosure material set forth in this disclosure. As such, and to the extent necessary, the disclosure as explicitly set forth herein supersedes any conflicting material incorporated herein by reference. Any material, or portion thereof, that is said to be incorporated by reference herein, but which conflicts with existing definitions, statements, or other disclosure material set forth herein will only be incorporated to the extent that no conflict arises between that incorporated material and the existing disclosure material.

The present disclosure applies to conventional endoscopic and open surgical instrumentation as well as application in robotic-assisted surgery.

Aspects of the devices disclosed herein can be designed to be disposed of after a single use, or they can be designed to be used multiple times. Examples may, in either or both cases, be reconditioned for reuse after at least one use. Reconditioning may include any combination of the steps of disassembly of the device, followed by cleaning or replacement of particular pieces, and subsequent reassembly. In particular, examples of the device may be disassembled, and any number of the particular pieces or parts of the device may be selectively replaced or removed in any combination. Upon cleaning and/or replacement of particular parts, examples of the device may be reassembled for subsequent use either at a reconditioning facility, or by a surgical team immediately prior to a surgical procedure. Those skilled in the art will appreciate that reconditioning of a device may utilize a variety of techniques for disassembly, cleaning/replacement, and reassembly. Use of such techniques, and the resulting reconditioned device, are all within the scope of the present application.

By way of example only, aspects described herein may be processed before surgery. First, a new or used instrument may be obtained and when necessary cleaned. The instrument may then be sterilized. In one sterilization technique, the instrument is placed in a closed and sealed container, such as a plastic or TYVEK bag. The container and instrument may then be placed in a field of radiation that can penetrate the container, such as gamma radiation, x-rays, or high-energy electrons. The radiation may kill bacteria on the instrument and in the container. The sterilized instrument may then be stored in the sterile container. The sealed container may keep the instrument sterile until it is opened in a medical facility. A device also may be sterilized using any other technique known in the art, including but not limited to beta or gamma radiation, ethylene oxide, plasma peroxide, or steam.

One skilled in the art will recognize that the herein described components (e.g., operations), devices, objects, and the discussion accompanying them are used as examples for the sake of conceptual clarity and that various configuration modifications are contemplated. Consequently, as used herein, the specific exemplars set forth and the accompanying discussion are intended to be representative of their more general classes. In general, use of any specific exemplar is intended to be representative of its class, and the non-inclusion of specific components (e.g., operations), devices, and objects should not be taken limiting.

With respect to the use of substantially any plural and/or singular terms herein, those having skill in the art can translate from the plural to the singular and/or from the singular to the plural as is appropriate to the context and/or application. The various singular/plural permutations are not expressly set forth herein for sake of clarity.

The herein described subject matter sometimes illustrates different components contained within, or connected with, different other components. It is to be understood that such depicted architectures are merely examples and that in fact many other architectures may be implemented which achieve the same functionality. In a conceptual sense, any arrangement of components to achieve the same functionality is effectively "associated" such that the desired functionality is achieved. Hence, any two components herein combined to achieve a particular functionality can be seen as "associated with" each other such that the desired functionality is achieved, irrespective of architectures or intermedial components. Likewise, any two components so associated can also be viewed as being "operably connected," or "operably coupled," to each other to achieve the desired functionality, and any two components capable of being so associated can also be viewed as being "operably couplable," to each other to achieve the desired functionality. Specific examples of operably couplable include but are not limited to physically matable and/or physically interacting components, and/or wirelessly interactable, and/or wirelessly interacting components, and/or logically interacting, and/or logically interactable components.

Some aspects may be described using the expression "coupled" and "connected" along with their derivatives. It should be understood that these terms are not intended as synonyms for each other. For example, some aspects may be described using the term "connected" to indicate that two or more elements are in direct physical or electrical contact with each other. In another example, some aspects may be described using the term "coupled" to indicate that two or more elements are in direct physical or electrical contact. The term "coupled," however, also may mean that two or more elements are not in direct contact with each other, but yet still co-operate or interact with each other.

In some instances, one or more components may be referred to herein as "configured to," "configurable to," "operable/operative to," "adapted/adaptable," "able to," "conformable/conformed to," etc. Those skilled in the art will recognize that "configured to" can generally encompass active-state components and/or inactive-state components and/or standby-state components, unless context requires otherwise.

While particular aspects of the present subject matter described herein have been shown and described, it will be apparent to those skilled in the art that, based upon the teachings herein, changes and modifications may be made without departing from the subject matter described herein and its broader aspects and, therefore, the appended claims are to encompass within their scope all such changes and modifications as are within the true scope of the subject matter described herein. It will be understood by those within the art that, in general, terms used herein, and especially in the appended claims (e.g., bodies of the appended claims) are generally intended as "open" terms (e.g., the term "including" should be interpreted as "including but not limited to," the term "having" should be interpreted as "having at least," the term "includes" should be interpreted as "includes but is not limited to," etc.). It will be further understood by those within the art that when a specific number of an introduced claim recitation is intended, such an intent will be explicitly recited in the claim, and in the absence of such recitation no such intent is present. For example, as an aid to understanding, the following appended claims may contain usage of the introductory phrases "at least one" and "one or more" to introduce claim recitations. However, the use of such phrases should not be construed to imply that the introduction of a claim recitation by the indefinite articles "a" or "an" limits any particular claim containing such introduced claim recitation to claims containing only one such recitation, even when the same claim includes the introductory phrases "one or more" or "at least one" and indefinite articles such as "a" or "an" (e.g., "a" and/or "an" should typically be interpreted to mean "at least one" or "one or more"); the same holds true for the use of definite articles used to introduce claim recitations.

In addition, even when a specific number of an introduced claim recitation is explicitly recited, those skilled in the art will recognize that such recitation should typically be interpreted to mean at least the recited number (e.g., the bare recitation of "two recitations," without other modifiers, typically means at least two recitations, or two or more recitations). Furthermore, in those instances where a convention analogous to "at least one of A, B, and C, etc." is used, in general such a construction is intended in the sense one having skill in the art would understand the convention (e.g., "a system having at least one of A, B, and C" would include but not be limited to systems that have A alone, B alone, C alone, A and B together, A and C together, B and C together, and/or A, B, and C together, etc.). In those instances where a convention analogous to "at least one of A, B, or C, etc." is used, in general such a construction is intended in the sense one having skill in the art would understand the convention (e.g., "a system having at least one of A, B, or C" would include but not be limited to systems that have A alone, B alone, C alone, A and B together, A and C together, B and C together, and/or A, B, and C together, etc.). It will be further understood by those within the art that typically a disjunctive word and/or phrase presenting two or more alternative terms, whether in the description, claims, or drawings, should be understood to contemplate the possibilities of including one of the terms, either of the terms, or both terms unless context dictates otherwise. For example, the phrase "A or B" will be typically understood to include the possibilities of "A" or "B" or "A and B."

With respect to the appended claims, those skilled in the art will appreciate that recited operations therein may generally be performed in any order. Also, although various operational flows are presented in a sequence(s), it should be understood that the various operations may be performed in other orders than those which are illustrated, or may be performed concurrently. Examples of such alternate orderings may include overlapping, interleaved, interrupted, reordered, incremental, preparatory, supplemental, simultaneous, reverse, or other variant orderings, unless context dictates otherwise. Furthermore, terms like "responsive to," "related to," or other past-tense adjectives are generally not intended to exclude such variants, unless context dictates otherwise.

In summary, numerous benefits have been described which result from employing the concepts described herein. The foregoing disclosure has been presented for purposes of illustration and description. It is not intended to be exhaustive or limiting to the precise form disclosed. Modifications or variations are possible in light of the above teachings. The one or more examples were chosen and described in order to illustrate principles and practical application to thereby enable one of ordinary skill in the art to utilize the various examples and with various modifications as are suited to the particular use contemplated. It is intended that the claims submitted herewith define the overall scope.

What is claimed is:

1. A powered surgical cutting and stapling instrument comprising:
- at least one sensor configured to measure at least one parameter associated with the instrument;
- at least one processor; and
- a memory operatively associated with the processor, the memory including machine executable instructions that when executed by the processor cause the processor to:
  - monitor the at least one sensor over a predetermined time period;
  - determine a rate of change of the measured parameter; and
  - determine a physiological tissue type according to the rate of change of the measured parameter.

2. The powered surgical cutting and stapling instrument of claim **1**, comprising an end effector comprising a first jaw member and a second jaw member, wherein at least one of the first and second jaw members is movable relative to the other jaw member, and wherein the at least one sensor is positioned on at least one of the first and second jaw members.

3. The powered surgical cutting and stapling instrument of claim **2**, further comprising:
- a magnet positioned on the first jaw member; and
- a magnetic field sensor, wherein the magnetic field sensor is coupled to the processor and the processor is configured to determine a gap distance between the first and second jaw members based on a signal received from the magnetic field sensor, wherein the signal from the magnetic field sensor is proportional to the gap distance between the magnet and the magnetic field sensor, and wherein the processor is configured to monitor the gap distance over the predetermined time period to determined the rate of change of the gap distance over the predetermined time period.

4. The powered surgical cutting and stapling instrument of claim **2**, further comprising:
- a knife channel defined in at least one of the first or second jaw members, wherein the knife channel is configured to translate a knife therealong;
- a knife configured to translate along the knife channel;
- a motor operatively coupled to the knife to advance and retract the knife along the knife channel; and

a current sensor configured to measure current draw of the motor while the motor advances the knife to cut tissue grasped between the first and second jaw members;

wherein the processor is configured to receive a signal from the current sensor over the predetermined time period, wherein the signal is representative of the current draw of the motor while the motor advances the knife through the tissue; and

wherein the processor is configured to determine a rate of change of the current draw of the motor while the motor advances the knife through the tissue over the predetermined time period.

5. The powered surgical cutting and stapling instrument of claim **2**, further comprising a force sensor positioned in at least one of the first or second jaw members to measure compression of tissue grasped between the first and second jaw members, wherein the processor is configured to receive a signal from the force sensor over the predetermined time period, wherein the signal is representative of the tissue compression, and wherein the processor is configured to determine a rate of change of the tissue compression over the predetermined time period.

6. The powered surgical cutting and stapling instrument of claim **2**, further comprising at least one electrode coupled to a sub-therapeutic radio frequency (RF) energy source configured to drive a low energy level RF signal through tissue grasped between the first and second jaw members to measure electrical impedance of the tissue, wherein the processor is configured to receive a signal from the at least one electrode over the predetermined time period, wherein the signal is representative of the tissue impedance, and wherein the processor is configured to determine a rate of change of the tissue impedance over the predetermined time period.

7. The powered surgical cutting and stapling instrument of claim **2**, further comprising a strain gauge positioned in a movable jaw member of the first or second jaw members to measure strain of the jaw member when tissue is grasped between the first and second jaw members, wherein the processor is configured to receive a signal from the strain gauge over the predetermined time period, wherein the signal is representative of the strain of the movable jaw member, and wherein the processor is configured to determine a rate of change of the strain over the predetermined time period.

8. The powered surgical cutting and stapling instrument of claim **1**, further comprising:

a handle;

a trigger movable relative to the handle; and

a pressure sensor or a strain gauge positioned on the movable trigger;

wherein the processor is configured to receive a signal from the strain gauge over the predetermined time period, wherein the signal is representative of a force applied to the movable trigger, and wherein the processor is configured to determine a rate of change of the force over the predetermined time period.

9. A powered surgical cutting and stapling instrument comprising:

an end effector comprising a first jaw member and a second jaw member, wherein at least one of the first and second jaw members is movable relative to the other jaw member, and wherein at least one sensor is positioned on at least one of the first and second jaw members;

a pressure sensor or strain gauge positioned in at least one of the first or second jaw members;

at least one processor; and

a memory operatively associated with the processor, the memory including machine executable instructions that when executed by the processor cause the processor to:

monitor a pressure applied to tissue grasped between the first and second jaw members; and

determine a physiological type of the tissue grasped between the first and second jaw members based on the tissue pressure.

10. The powered surgical cutting and stapling instrument of claim **9**, wherein the processor is configured to determine tissue displacement by measuring tissue pressure along a first axis and along a second axis, wherein the first and second axes are transverse relative to each other.

11. The powered surgical cutting and stapling instrument of claim **10**, wherein the processor is configured to determine the physiological type of the tissue further based on an amount of the tissue displacement and a rate of the tissue displacement.

12. The powered surgical cutting and stapling instrument of claim **9**, wherein the processor is configured to determine tissue displacement based on multiple thresholds or progressive thresholds to provide higher resolution of tissue types with similar viscoelastic properties.

13. A powered surgical cutting and stapling instrument comprising:

an end effector comprising a first jaw member and a second jaw member, wherein at least one of the first and second jaw members is movable relative to the other jaw member, and wherein at least one sensor is positioned on at least one of the first and second jaw members;

a pressure sensor or strain gauge positioned in at least one of the first or second jaw members;

a gap sensor to measure a gap distance between the first and second jaw members;

at least one processor; and

a memory operatively associated with the processor, the memory including machine executable instructions that when executed by the processor cause the processor to:

monitor the pressure applied to tissue grasped between the first and second jaw members;

monitor the gap distance between the first and second jaw members;

compensate tissue compression measurements according to an amount of the tissue located between the first and second jaw member; and

determine a type of tissue grasped between the first and second jaw members based on the tissue pressure and the gap distance.

14. The powered surgical cutting and stapling instrument of claim **13**, wherein the tissue pressure and the gap distance are used by the processor to determine the amount of tissue grasped between the first and second jaw members.

15. The powered surgical cutting and stapling instrument of claim **14**, wherein the processor is configured to determine elapsed time in conjunction with pressure and gap distance measurements to determine a derivative parameter.

16. The powered surgical cutting and stapling instrument of claim **15**, wherein the processor is configured to determine that a measured parameter has reached an asymptotic value when a rate of change remains constant after a set period of time.

17. The powered surgical cutting and stapling instrument of claim **15**, wherein the processor employs rate of change information to determine when a steady state has been achieved and thereby signaling a next step in a process.

18. The powered surgical cutting and stapling instrument of claim **17**, wherein the processor is configured to send a signal to a display alerting a user of the instrument to start a next step in the process.

19. The powered surgical cutting and stapling instrument of claim **17**, wherein the processor is configured to automatically start a next step of the process once a steady state is reached.

20. The powered surgical cutting and stapling instrument of claim **15**, wherein the processor is configured to combine impedance rate of change with strain in at least one of the first and second jaw members to relate force and compression.

* * * * *