US010130378B2

(12) **United States Patent**
Bryan

(10) **Patent No.: US 10,130,378 B2**
(45) **Date of Patent: Nov. 20, 2018**

(54) **GENERATING PATIENT SPECIFIC INSTRUMENTS FOR USE AS SURGICAL AIDS**

(75) Inventor: **Jason A. Bryan**, Avon Lake, OH (US)

(73) Assignee: **THE CLEVELAND CLINIC FOUNDATION**, Cleveland, OH (US)

(*) Notice: Subject to any disclaimer, the term of this patent is extended or adjusted under 35 U.S.C. 154(b) by 167 days.

(21) Appl. No.: **13/468,272**

(22) Filed: **May 10, 2012**

(65) **Prior Publication Data**

US 2012/0290272 A1 Nov. 15, 2012

Related U.S. Application Data

(60) Provisional application No. 61/484,926, filed on May 11, 2011.

(51) **Int. Cl.**

A61B 17/16	(2006.01)
B33Y 80/00	(2015.01)
A61B 34/10	(2016.01)

(52) **U.S. Cl.**

CPC ***A61B 17/1684*** (2013.01); ***A61B 34/10*** (2016.02); *A61B 2034/102* (2016.02); *A61B 2034/108* (2016.02); *B33Y 80/00* (2014.12)

(58) **Field of Classification Search**

CPC A61B 5/103; A61B 5/4528; A61B 5/4533; A61B 5/4824; A61B 5/6878; A61B 17/1684; A61B 34/10; A61B 2034/102; A61B 2034/108; A61F 2002/30945; A61F 2002/30955; A61F 2002/3096; A61F 2/38;

(Continued)

(56) **References Cited**

U.S. PATENT DOCUMENTS

4,841,975	A	6/1989	Woolson
5,098,383	A	3/1992	Hemmy et al.

(Continued)

FOREIGN PATENT DOCUMENTS

AU	2004293091	A1	6/2005
AU	2004293104	A1	6/2005

(Continued)

OTHER PUBLICATIONS

Hubbard, P.M, Constructive Solid Geometry for Triangulated Polyhedra, Dept fo Comp Science Brown University , Sep. 1, 1990.*

(Continued)

Primary Examiner — Brian S Cook

(74) *Attorney, Agent, or Firm* — Norton Rose Fulbright Canada LLP

(57) **ABSTRACT**

Systems and methods are provided for generating patient specific instruments for use as surgical guides. A region of interest within a body of a patient is scanned to provide a three-dimensional model of the region of interest. A first user is allowed to position a model of a selected implant with the three-dimensional model of the region of interest via a graphical user interface. A patient specific instrument model is generated from a generic patient specific instrument model according to the position of the model of the selected implant within the three-dimensional model of the region of interest and the position of at least one extension of the model that is not visible to the first user. A patient specific instrument is fabricated according to the patient specific instrument model.

24 Claims, 12 Drawing Sheets

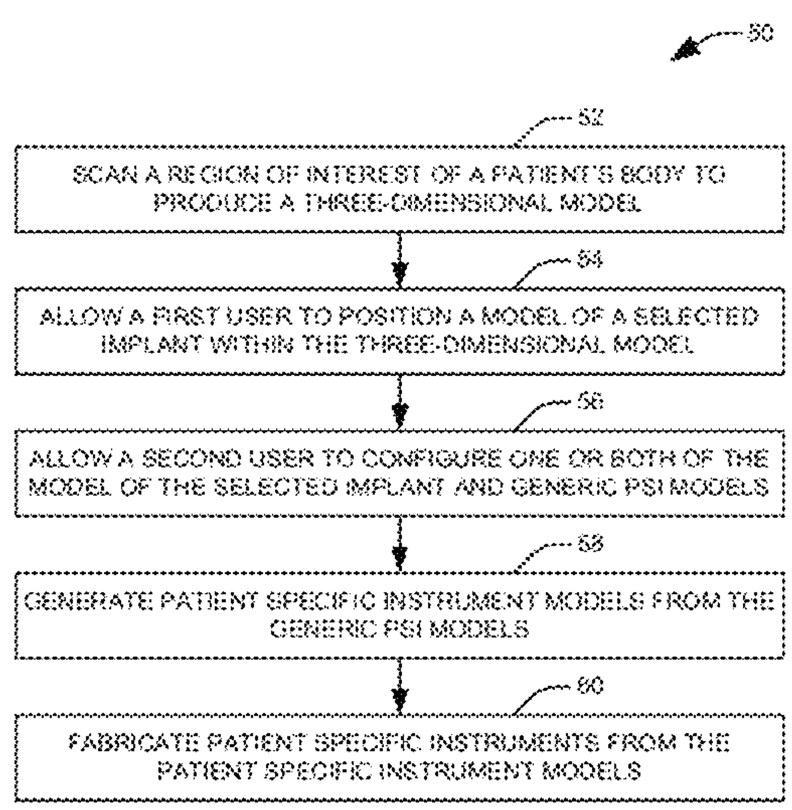

(58) **Field of Classification Search**
CPC ... G06F 19/12; G06F 19/3437; G06F 19/3481
USPC 600/407; 700/186; 606/88, 87, 88.87; 703/1, 2, 6; 345/419; 382/128; 701/6
See application file for complete search history.

(56) **References Cited**

U.S. PATENT DOCUMENTS

5,490,854 A 2/1996 Fisher et al.
5,768,134 A 6/1998 Swaelens et al.
5,871,018 A 2/1999 Delp et al.
5,916,219 A 6/1999 Matsuno et al.
6,505,065 B1 * 1/2003 Yanof A61N 5/103 600/103
6,754,556 B1 * 6/2004 Landers et al. 700/182
6,757,582 B2 * 6/2004 Brisson et al. 700/186
6,772,026 B2 8/2004 Bradbury et al.
7,206,627 B2 * 4/2007 Abovitz et al. 600/407
7,356,367 B2 * 4/2008 Liang et al. 600/407
7,357,057 B2 4/2008 Chiang
7,468,075 B2 12/2008 Lang et al.
7,510,557 B1 3/2009 Bonutti
7,534,263 B2 5/2009 Burdulis
7,618,451 B2 11/2009 Berez et al.
7,630,750 B2 * 12/2009 Liang et al. 600/407
7,634,119 B2 12/2009 Tsougarakis et al.
7,717,956 B2 5/2010 Lang
7,747,305 B2 * 6/2010 Dean et al. 600/407
7,747,418 B2 6/2010 Leu et al.
7,796,791 B2 9/2010 Tsougarakis et al.
7,799,077 B2 9/2010 Lang et al.
7,806,896 B1 10/2010 Bonutti
7,806,897 B1 10/2010 Bonutti
7,967,868 B2 6/2011 White et al.
7,981,158 B2 7/2011 Fitz et al.
8,062,302 B2 11/2011 Lang et al.
8,066,708 B2 11/2011 Lang et al.
8,070,752 B2 12/2011 Metzger et al.
8,077,950 B2 12/2011 Tsougarakis et al.
8,083,745 B2 12/2011 Lang et al.
8,092,465 B2 1/2012 Metzger et al.
8,094,900 B2 1/2012 Steines et al.
8,105,330 B2 1/2012 Fitz et al.
8,122,582 B2 2/2012 Burdulis, Jr. et al.
8,133,234 B2 3/2012 Meridew et al.
8,160,345 B2 4/2012 Pavlovskaia et al.
8,175,683 B2 5/2012 Roose
8,221,430 B2 7/2012 Park et al.
8,234,097 B2 7/2012 Steines et al.
8,241,293 B2 8/2012 Stone et al.
8,282,646 B2 10/2012 Schoenefeld et al.
8,298,237 B2 10/2012 Schoenefeld
8,337,501 B2 12/2012 Fitz et al.
8,337,507 B2 12/2012 Lang et al.
8,343,218 B2 1/2013 Lang et al.
8,366,771 B2 2/2013 Burdulis et al.
8,377,129 B2 2/2013 Fitz et al.
8,439,926 B2 5/2013 Bojarski et al.
8,460,304 B2 6/2013 Fitz et al.
8,480,754 B2 7/2013 Bojarski et al.
8,500,740 B2 8/2013 Bojarski et al.
8,529,568 B2 9/2013 Bouadi
8,529,630 B2 9/2013 Bojarski
8,585,708 B2 9/2013 Fitz et al.
8,545,569 B2 10/2013 Fitz et al.
8,551,099 B2 10/2013 Lang et al.
8,551,102 B2 10/2013 Fitz et al.
8,551,103 B2 10/2013 Fitz et al.
8,551,169 B2 10/2013 Fitz et al.
8,556,906 B2 10/2013 Fitz et al.
8,556,907 B2 10/2013 Fitz et al.
8,556,971 B2 10/2013 Lang
8,556,983 B2 10/2013 Bojarski et al.
8,561,278 B2 10/2013 Fitz et al.
8,562,611 B2 10/2013 Fitz et al.
8,562,618 B2 10/2013 Fitz et al.
8,568,479 B2 10/2013 Fitz et al.
8,568,480 B2 10/2013 Fitz et al.
8,617,172 B2 12/2013 Fitz et al.
8,617,242 B2 12/2013 Philipp
8,623,026 B2 * 1/2014 Wong A61B 17/1703 29/592
8,634,617 B2 1/2014 Tsougarakis et al.
8,638,998 B2 1/2014 Steines et al.
8,641,716 B2 2/2014 Fitz et al.
8,657,827 B2 2/2014 Fitz et al.
8,682,052 B2 3/2014 Fitz et al.
8,974,459 B1 * 3/2015 Axelson, Jr. ..... A61B 17/155 606/86 R
2003/0055502 A1 3/2003 Lang et al.
2003/0216669 A1 11/2003 Lang et al.
2004/0133276 A1 7/2004 Lang et al.
2004/0138754 A1 7/2004 Lang et al.
2004/0147927 A1 7/2004 Tsougarakis et al.
2004/0153079 A1 8/2004 Tsougarakis et al.
2004/0171924 A1 * 9/2004 Mire et al. 600/407
2004/0204644 A1 10/2004 Tsougarakis et al.
2004/0204760 A1 10/2004 Fitz et al.
2004/0225968 A1 * 11/2004 Look et al. 715/778
2004/0236424 A1 11/2004 Berez et al.
2005/0148843 A1 7/2005 Roose
2005/0234461 A1 10/2005 Burdulis et al.
2005/0267584 A1 12/2005 Burdulis et al.
2006/0094951 A1 * 5/2006 Dean A61F 2/30942 600/407
2006/0111722 A1 5/2006 Bouadi
2007/0083266 A1 4/2007 Lang
2007/0100462 A1 5/2007 Lang et al.
2007/0156171 A1 7/2007 Lang et al.
2007/0157783 A1 7/2007 Chiang
2007/0198022 A1 8/2007 Lang et al.
2007/0226986 A1 10/2007 Park et al.
2007/0233141 A1 10/2007 Park et al.
2007/0233269 A1 10/2007 Steines et al.
2007/0248261 A1 * 10/2007 Zhou G06F 19/321 382/154
2007/0250169 A1 10/2007 Lang
2007/0288030 A1 * 12/2007 Metzger A61B 17/154 606/87
2008/0114370 A1 5/2008 Schoenefeld
2008/0147072 A1 6/2008 Park et al.
2008/0161815 A1 7/2008 Schoenefeld et al.
2008/0195216 A1 8/2008 Philipp
2008/0243127 A1 10/2008 Lang et al.
2008/0275452 A1 11/2008 Lang et al.
2008/0281328 A1 11/2008 Lang et al.
2008/0281329 A1 11/2008 Fitz et al.
2008/0281426 A1 11/2008 Fitz et al.
2008/0287954 A1 11/2008 Kunz et al.
2009/0018546 A1 1/2009 Daley
2009/0024131 A1 1/2009 Metzgu et al.
2009/0088753 A1 4/2009 Aram et al.
2009/0088754 A1 4/2009 Aker et al.
2009/0088755 A1 4/2009 Aker et al.
2009/0088758 A1 4/2009 Bennett
2009/0088759 A1 4/2009 Aram et al.
2009/0088760 A1 4/2009 Aram et al.
2009/0088761 A1 4/2009 Roose et al.
2009/0088763 A1 4/2009 Aram et al.
2009/0093816 A1 * 4/2009 Roose et al. 606/87
2009/0099567 A1 4/2009 Zajac
2009/0100368 A1 * 4/2009 Look et al. 715/775
2009/0110498 A1 4/2009 Park et al.
2009/0131941 A1 5/2009 Park et al.
2009/0131942 A1 5/2009 Aker et al.
2009/0138020 A1 * 5/2009 Park et al. 606/88
2009/0157083 A1 6/2009 Park et al.
2009/0222014 A1 9/2009 Bojarksi et al.
2009/0222016 A1 9/2009 Park et al.
2009/0222103 A1 9/2009 Fitz et al.
2009/0226068 A1 9/2009 Fitz et al.
2009/0228113 A1 9/2009 Lang et al.
2009/0254093 A1 10/2009 White et al.
2009/0254367 A1 * 10/2009 Belcher G06Q 50/22 705/2

(56) **References Cited**

U.S. PATENT DOCUMENTS

2009/0270868 A1* 10/2009 Park et al. 606/87
2009/0276045 A1 11/2009 Lang
2009/0306676 A1 12/2009 Lang et al.
2009/0307893 A1 12/2009 Burdulis, Jr. et al.
2009/0312805 A1 12/2009 Lang et al.
2010/0023015 A1 1/2010 Park
2010/0042105 A1 2/2010 Park et al.
2010/0049195 A1 2/2010 Park et al.
2010/0054572 A1 3/2010 Tsougarakis et al.
2010/0082035 A1 4/2010 Keefer
2010/0087829 A1 4/2010 Metzger et al.
2010/0121614 A1* 5/2010 Reghetti et al. 703/1
2010/0138762 A1* 6/2010 Reghetti et al. 715/765
2010/0152741 A1 6/2010 Park et al.
2010/0152782 A1 6/2010 Stone et al.
2010/0160917 A1 6/2010 Fitz et al.
2010/0168754 A1 7/2010 Fitz et al.
2010/0174376 A1 7/2010 Lang et al.
2010/0185202 A1 7/2010 Lester et al.
2010/0191244 A1 7/2010 White et al.
2010/0203478 A1 8/2010 Rubbert
2010/0212138 A1 8/2010 Carroll et al.
2010/0217270 A1 8/2010 Polinski et al.
2010/0217338 A1 8/2010 Carroll et al.
2010/0223032 A1* 9/2010 Reghetti et al. 703/1
2010/0228257 A1 9/2010 Bonutti
2010/0234849 A1 9/2010 Bouadi
2010/0256479 A1 10/2010 Park et al.
2010/0262150 A1 10/2010 Lian
2010/0274534 A1 10/2010 Steines et al.
2010/0281678 A1 11/2010 Burdulis, Jr. et al.
2010/0286700 A1 11/2010 Snider et al.
2010/0298894 A1 11/2010 Bojarski et al.
2010/0303313 A1 12/2010 Lang et al.
2010/0303317 A1 12/2010 Tsougarakis et al.
2010/0303324 A1 12/2010 Lang et al.
2010/0305573 A1 12/2010 Fitz et al.
2010/0305574 A1 12/2010 Fitz et al.
2010/0305708 A1 12/2010 Lang et al.
2010/0305907 A1 12/2010 Fitz et al.
2010/0329530 A1 12/2010 Lang et al.
2011/0015636 A1 1/2011 Katrana et al.
2011/0015637 A1 1/2011 De Smedt et al.
2011/0015639 A1 1/2011 Metzger et al.
2011/0029091 A1 2/2011 Bojarski et al.
2011/0029093 A1* 2/2011 Bojarski A61F 2/30942 623/20.35
2011/0040168 A1 2/2011 Arnaud et al.
2011/0054478 A1 3/2011 Vanasse et al.
2011/0060341 A1 3/2011 Angibaud et al.
2011/0066193 A1 3/2011 Lang et al.
2011/0066245 A1 3/2011 Lang et al.
2011/0071533 A1* 3/2011 Metzger et al. 606/88
2011/0071581 A1 3/2011 Lang et al.
2011/0071645 A1 3/2011 Bojarski et al.
2011/0071802 A1 3/2011 Bojarski et al.
2011/0087332 A1 4/2011 Bojarski et al.
2011/0087465 A1* 4/2011 Mahfouz 703/1
2011/0092977 A1 4/2011 Salehi et al.
2011/0093086 A1 4/2011 Witt et al.
2011/0093108 A1 4/2011 Ashby et al.
2011/0106093 A1 5/2011 Romano et al.
2011/0144760 A1 6/2011 Wong et al.
2011/0160736 A1 6/2011 Meridew et al.
2011/0160867 A1 6/2011 Meridew et al.
2011/0166578 A1 7/2011 Stone et al.
2011/0172672 A1 7/2011 Dubeau et al.
2011/0184419 A1 7/2011 Meridew et al.
2011/0190775 A1 8/2011 Ure
2011/0196377 A1 8/2011 Hodorek et al.
2011/0213368 A1 9/2011 Fitz et al.
2011/0213373 A1 9/2011 Fitz et al.
2011/0213374 A1 9/2011 Fitz et al.
2011/0213376 A1 9/2011 Maxson et al.
2011/0213377 A1 9/2011 Lang et al.
2011/0213427 A1 9/2011 Fitz et al.
2011/0213428 A1 9/2011 Fitz et al.
2011/0213429 A1 9/2011 Lang et al.
2011/0213430 A1 9/2011 Lang et al.
2011/0213431 A1 9/2011 Fitz et al.
2011/0214279 A1 9/2011 Park et al.
2011/0218539 A1 9/2011 Fitz et al.
2011/0218545 A1 9/2011 Catanzarite et al.
2011/0218584 A1 9/2011 Fitz et al.
2011/0224674 A1 9/2011 White et al.
2011/0230888 A1 9/2011 Lang et al.
2011/0238073 A1 9/2011 Lang et al.
2011/0245835 A1 10/2011 Dodds et al.
2011/0266265 A1 11/2011 Lang
2011/0295329 A1 12/2011 Fitz et al.
2011/0295378 A1* 12/2011 Bojarski A61F 2/30942 623/20.35
2011/0313423 A1 12/2011 Lang et al.
2011/0313424 A1 12/2011 Bono et al.
2011/0319897 A1 12/2011 Lang et al.
2011/0319900 A1 12/2011 Lang et al.
2012/0010711 A1 1/2012 Antonyshyn et al.
2012/0029520 A1 2/2012 Lang et al.
2012/0041445 A1 2/2012 Roose et al.
2012/0041446 A1 2/2012 Wong et al.
2012/0065640 A1 3/2012 Metzger et al.
2012/0066892 A1 3/2012 Lang et al.
2012/0071881 A1 3/2012 Lang et al.
2012/0071882 A1 3/2012 Lang et al.
2012/0071883 A1 3/2012 Lang et al.
2012/0072185 A1 3/2012 Lang et al.
2012/0078254 A1 3/2012 Ashby et al.
2012/0078258 A1 3/2012 Lo et al.
2012/0078259 A1 3/2012 Meridew
2012/0093377 A1 4/2012 Tsougarakis et al.
2012/0101503 A1 4/2012 Lang et al.
2012/0109138 A1 5/2012 Meridew et al.
2012/0109591 A1* 5/2012 Thompson G06F 17/50 703/1
2012/0116203 A1 5/2012 Vancraen et al.
2012/0116562 A1 5/2012 Agnihotri et al.
2012/0123422 A1 5/2012 Agnihotri et al.
2012/0123423 A1 5/2012 Fryman
2012/0130382 A1 5/2012 Iannotti et al.
2012/0130687 A1 5/2012 Otto et al.
2012/0141034 A1 6/2012 Iannotti et al.
2012/0143197 A1 6/2012 Lang et al.
2012/0151730 A1 6/2012 Fitz et al.
2012/0158001 A1 6/2012 Burdulis, Jr. et al.
2012/0165820 A1 6/2012 De Smedt et al.
2012/0172884 A1 7/2012 Zheng et al.
2012/0191205 A1 7/2012 Bojarski et al.
2012/0191420 A1 7/2012 Bojarski et al.
2012/0192401 A1 8/2012 Pavlovskaia et al.
2012/0197260 A1 8/2012 Fitz et al.
2012/0197408 A1 8/2012 Lang et al.
2012/0201440 A1 8/2012 Steines et al.
2012/0209276 A1 8/2012 Schuster
2012/0209394 A1 8/2012 Bojarski et al.
2012/0215226 A1 8/2012 Bonutti
2012/0221008 A1 8/2012 Carroll et al.
2012/0226283 A1 9/2012 Meridew et al.
2012/0232669 A1 9/2012 Bojarski et al.
2012/0232670 A1 9/2012 Bojarski et al.
2012/0232671 A1 9/2012 Bojarski
2012/0239045 A1 9/2012 Li
2012/0245647 A1 9/2012 Kunz et al.
2012/0245699 A1 9/2012 Lang et al.
2012/0265208 A1 10/2012 Smith
2012/0271366 A1 10/2012 Katrana et al.
2012/0276509 A1 11/2012 Iannotti et al.
2012/0277751 A1 11/2012 Catanzarite et al.
2012/0289966 A1 11/2012 Fitz et al.
2012/0296337 A1 11/2012 Fitz et al.
2013/0018378 A1* 1/2013 Hananouchi A61B 17/1739 606/87
2013/0018379 A1 1/2013 Fitz et al.
2013/0018380 A1 1/2013 Fitz et al.
2013/0018464 A1 1/2013 Fitz et al.

(56) **References Cited**

U.S. PATENT DOCUMENTS

2013/0023884	A1	1/2013	Fitz et al.
2013/0024000	A1	1/2013	Bojarski et al.
2013/0030419	A1	1/2013	Fitz et al.
2013/0030441	A1	1/2013	Fitz et al.
2013/0079781	A1	3/2013	Fitz et al.
2013/0079876	A1	3/2013	Fitz et al.
2013/0081247	A1	4/2013	Fitz et al.
2013/0096562	A1	4/2013	Fitz et al.
2013/0103363	A1	4/2013	Lang et al.
2013/0110471	A1	5/2013	Lang et al.
2013/0123792	A1	5/2013	Fitz et al.
2013/0184713	A1	7/2013	Bojarski et al.
2013/0197870	A1	8/2013	Steines et al.
2013/0211409	A1	8/2013	Burdulis, Jr. et al.
2013/0211410	A1	8/2013	Landes et al.
2013/0211531	A1	8/2013	Steines et al.
2013/0245803	A1	9/2013	Lang
2013/0253522	A1	9/2013	Bojarski et al.
2013/0289570	A1	10/2013	Chao
2013/0296874	A1	11/2013	Chao
2013/0297031	A1	11/2013	Hafez
2013/0317511	A1	11/2013	Bojarski et al.
2013/0331850	A1	12/2013	Bojarski et al.
2014/0005792	A1	1/2014	Lang et al.
2014/0029814	A1	1/2014	Fitz et al.
2014/0031826	A1	1/2014	Bojarski et al.
2014/0039631	A1	2/2014	Bojarski et al.
2014/0058396	A1	2/2014	Fitz et al.
2014/0058397	A1	2/2014	Fitz et al.
2014/0066935	A1	3/2014	Fitz et al.
2014/0066936	A1	3/2014	Fitz et al.
2014/0074441	A1	3/2014	Fitz et al.
2014/0081400	A1*	3/2014	Azernikov et al. 623/16.11
2014/0086780	A1	3/2014	Miller et al.

FOREIGN PATENT DOCUMENTS

AU	2005309692	A1	6/2006
AU	2005311558	A1	6/2006
AU	2002310193	B2	3/2007
AU	2006297137	A1	4/2007
AU	2002310193	B8	5/2007
AU	2007202573	A1	6/2007
AU	2007212033	A1	8/2007
AU	2007226924	A1	9/2007
AU	2009221773	A1	9/2009
AU	2009246474	A1	11/2009
AU	2010201200	A1	4/2010
AU	2011203237	A1	7/2011
AU	2010217903	A1	9/2011
AU	2010236263	A1	11/2011
AU	2010264466	A1	2/2012
AU	2010289706	A1	3/2012
AU	2010315099	A1	5/2012
AU	2010327987	A1	6/2012
AU	2011203237	B2	10/2012
AU	2012216829	A1	10/2012
AU	2012217654	A1	10/2013
AU	2007212033	B2	1/2014
AU	2014200073	A1	1/2014
AU	2012289973	A1	3/2014
AU	2012296556	A1	3/2014
CA	2501041	A1	4/2004
CA	2505371	A1	5/2004
CA	2505419	A1	6/2004
CA	2506849	A1	6/2004
CA	2546958	A1	6/2005
CA	2546965	A1	6/2005
CA	2804883	A1	6/2005
CA	2588907	A1	6/2006
CA	2590534	A1	6/2006
CA	2623834	A1	4/2007
CA	2641241	A1	8/2007
CA	2646288	A1	9/2007
CA	2717760	A1	9/2009
CA	2765499	A1	12/2010
CA	2771573	A1	3/2011
CA	2779283	A1	5/2011
CA	2782137	A1	6/2011
CA	2546965	C	3/2013
CN	1728976	A	2/2006
CN	1729483	A	2/2006
CN	1729484	A	2/2006
CN	1913844	A	2/2007
CN	101111197	A	1/2008
CN	101384230	A	3/2009
CN	101442960	A	5/2009
CN	100502808	C	6/2009
CN	102006841	A	4/2011
CN	102125448	A	7/2011
CN	102405032	A	4/2012
CN	102448394	A	5/2012
CN	101420911	B	7/2012
CN	102599960	A	7/2012
CN	1913844	B	9/2012
CN	102711670	A	10/2012
CN	102724934	A	10/2012
CN	102805677	A	12/2012
CN	1729483	B	10/2013
CN	103476363	A	12/2013
DE	60336002		3/2011
DE	60239674		5/2011
DE	602004032166		5/2011
DE	602005027391		5/2011
EP	1555962	A1	7/2005
EP	1558181	A1	8/2005
EP	1567985	A2	8/2005
EP	1575460	A2	9/2005
EP	1686930	A1	8/2006
EP	1686931	A1	8/2006
EP	1389980	A4	4/2007
EP	1814491	A1	8/2007
EP	1833387	A1	9/2007
EP	1686930	A4	10/2007
EP	1686931	A4	1/2008
EP	1928359	A2	6/2008
EP	1951136	A1	8/2008
EP	1981409	A2	10/2008
EP	1996121	A2	12/2008
EP	2114312	A2	11/2009
EP	2124764	A1	12/2009
EP	2208470	A1	7/2010
EP	1928359	A4	10/2010
EP	2259753	A1	12/2010
EP	2265199	A1	12/2010
EP	1555962	B1	2/2011
EP	2292188	A2	3/2011
EP	2292189	A2	3/2011
EP	1389980	B1	4/2011
EP	1686930	B1	4/2011
EP	1833387	B1	4/2011
EP	2303193	A1	4/2011
EP	2316357	A1	5/2011
EP	2324799	A2	5/2011
EP	2335654	A1	6/2011
EP	2403434	A1	1/2012
EP	2405865	A2	1/2012
EP	2419035	A1	2/2012
EP	2265199	A4	3/2012
EP	2303193	A4	3/2012
EP	2259753	A4	4/2012
EP	2292188	A3	5/2012
EP	2292189	A3	5/2012
EP	2445451	A1	5/2012
EP	2470126	A1	7/2012
EP	2496183	A2	9/2012
EP	2509539	A2	10/2012
EP	2512381	A2	10/2012
EP	2324799	A3	1/2013
EP	2419035	A4	1/2013
EP	2445451	A4	3/2013
EP	2403434	A4	4/2013
EP	2591756	A1	5/2013
EP	2496183	A4	12/2013

(56) **References Cited**

FOREIGN PATENT DOCUMENTS

EP	2512381	A4		12/2013	
EP	2649951	A2		12/2013	
EP	2649951	A3		12/2013	
EP	2671520	A3		12/2013	
EP	2671521	A3		12/2013	
EP	2671522	A3		12/2013	
EP	2114312	B1		1/2014	
EP	2710967	A2		3/2014	
GB	2484042	A		3/2012	
GB	2489884	A		10/2012	
GB	201213674			10/2012	
GB	2484042	B		3/2014	
HK	1059882	A1		8/2011	
HK	1072710	A1		8/2011	
HK	1087324	A1		11/2011	
HK	1104776	A1		11/2011	
JP	2006510403	A		3/2006	
JP	2007514470	A		6/2007	
JP	2011519713	A		7/2011	
JP	2011224384	A		11/2011	
JP	2012091033	A		5/2012	
JP	2012176318	A		9/2012	
JP	5053515	B2		10/2012	
JP	2012187415	A		10/2012	
JP	2012523897	A		10/2012	
JP	5074036	B2		11/2012	
JP	2012531265	A		12/2012	
JP	2013503007	A		1/2013	
JP	5148284	B2		2/2013	
JP	5198069	B2		5/2013	
JP	2014000425	A		1/2014	
KR	20050072500	A		7/2005	
KR	20050084024	A		8/2005	
KR	20120090997	A		8/2012	
KR	20120102576	A		9/2012	
MX	2012007140	A		1/2013	
NZ	597261	A		11/2013	
SG	173840	A1		9/2011	
SG	175229	A1		11/2011	
SG	176833	A1		1/2012	
SG	178836	A1		4/2012	
SG	193484	A1		10/2013	
TW	200509870	A		3/2005	
TW	1231755	B		5/2005	
TW	200800123	A		1/2008	
TW	1330075	B		9/2010	
WO	2004049981	A3		6/2004	
WO	2004051301	A3		6/2004	
WO	2005051239	A1		6/2005	
WO	2005051240	A1		6/2005	
WO	2006058057	A2		6/2006	
WO	2006060795	A1		6/2006	
WO	2006058057	A8		7/2006	
WO	2007041375	A2		4/2007	
WO	2007062103	A1		5/2007	
WO	2007092841	A2		8/2007	
WO	2007109641	A2		9/2007	
WO	2007092841	A3		11/2007	
WO	2007109641	A3		12/2007	
WO	WO2009/076296		*	12/2007	..... A61B 17/74
WO	2008101090	A2		8/2008	
WO	2008112996	A1		9/2008	
WO	2008101090	A3		11/2008	
WO	2008157412	A2		12/2008	
WO	2007041375	A3		4/2009	
WO	2008157412	A3		4/2009	
WO	2009111626	A2		9/2009	
WO	2009111639	A1		9/2009	
WO	2009111656	A1		9/2009	
WO	2009140294	A1		11/2009	
WO	2009111626	A3		1/2010	
WO	2010099231	A2		9/2010	
WO	2010099353	A1		9/2010	
WO	2010/124164	A1	*	10/2010	..... A61B 17/58
WO	2010121147	A1		10/2010	
WO	WO-2010124164	A1	*	10/2010	..... A61B 17/1746
WO	2010099231	A3		11/2010	
WO	2011028624	A1		3/2011	
WO	2011056995	A2		5/2011	
WO	2011072235	A2		6/2011	
WO	2011075697	A2		6/2011	
WO	2011056995	A3		9/2011	
WO	2011075697	A3		10/2011	
WO	2011072235	A3		12/2011	
WO	2012112694	A1		8/2012	
WO	2012112694	A2		8/2012	
WO	2012112698	A2		8/2012	
WO	2012112701	A2		8/2012	
WO	2012112702	A2		8/2012	
WO	2012112694	A3		1/2013	
WO	2012112701	A3		1/2013	
WO	2012112702	A3		1/2013	
WO	2013020026	A1		2/2013	
WO	2013025814	A1		2/2013	
WO	2012112698	A3		3/2013	
WO	2013056036	A1		4/2013	
WO	2013119790	A1		8/2013	
WO	2013119865	A1		8/2013	
WO	2013131066	A1		9/2013	
WO	2013152341	A1		10/2013	
WO	2013155500	A1		10/2013	
WO	2013155501	A1		10/2013	
WO	2014008444	A1		1/2014	
WO	2014035991	A1		3/2014	
WO	2014047514	A1		3/2014	

OTHER PUBLICATIONS

Harper, I., How you see it . . . Now you don't! Object Visibility in AutoCAD 2011, Aug. 17, 2010 http://www.cadsoft-consult.com/blogs/acad/2010.*

Finkelstein, E., Easily hide and isolate objects in AutoCAD 2011, Apr. 25, 2010 http://www.ellenfinkelstein.com/acadblog/.*

Model, Websters II New Riverside University Dictionary, Houghton Mifflioon Company, 1994.*

Hidden_Definition, Webster's NewWorld Thesaurus, 1985 Simon & Schuster, Inc.*

HIPAA_2003 (Meeting HIPAA Requirements with Role-Based Access Control, Jul. 1, 2003 downloaded from https://hme-business.com/Articles/2003/07/01/Meeting-HIPAA-Requirements-with-RoleBased-Acces).*

RBAC_Surgery_Plan_2000 (Role-Based Access to Patient Clinical Data: The InterCar Approach in the Region of Crete, Proceedings of MIE 2000 and GMDS 2000, IOS Press, pp. 1074-1079, Hannover, Germany, Aug. 27-Sep. 1, 2000).*

Sandhu_1996 (Role-Based Access Control Methods, IEEE Computer, vol. 29, No. 2, Feb. 1996, pp. 38-47).*

Cera_2003 (Role-Based Viewing Envelopes for Information Protection in Collaborative Modeling, Drexel University Technical Report DU-CS-03-XX, Apr. 2003).*

PCT International Search Report and Written Opinion, dated Jul. 25, 2012, pp. 1-12.

Krekel, et al., Interactive Simulation and Comparative Visualisation of the . . . , Data Visualisation Group, Delft Univ. of Technology, pp. 1-13.

Krekel, et al., Combined Surface and Volume Processing for Fused Joint Segmentation, Springer Int'l. Journal of Computer Assisted Radiology and Surgery, pp. 1-24.

Krekel, et al., Visual Analysis of Multi-Joint Kinematic Data, Eurographics/IEEE-VGTC Symposium on Visulatization 2010, vol. 29 (2010), No. 3, pp. 1-10.

Krekel, et al., Evaluation of Bone Impingement Prediction in Preoperative Planning for Shoulder Arthroplasty, Proc. IMechE vol. 223, Part H: J.Engin. in Med., 2009, pp. 1-10.

Botha, et al., Pre-Operative Planning and Intra-Operative Guidance for Shoulder Replacement Surgery, Dagstuhl Publ., pp. 179-195.

Taylor et al, "Computer-Integrated Surgery, Technology and Clinical Applications", The MIT Press, Cambridge, MA, London, UK, pp. 451-463.

(56) **References Cited**

OTHER PUBLICATIONS

Hofmann et al, "Natural-Knee II System", Intermedics Orthopedics, Austin, TX, 1995.

* cited by examiner

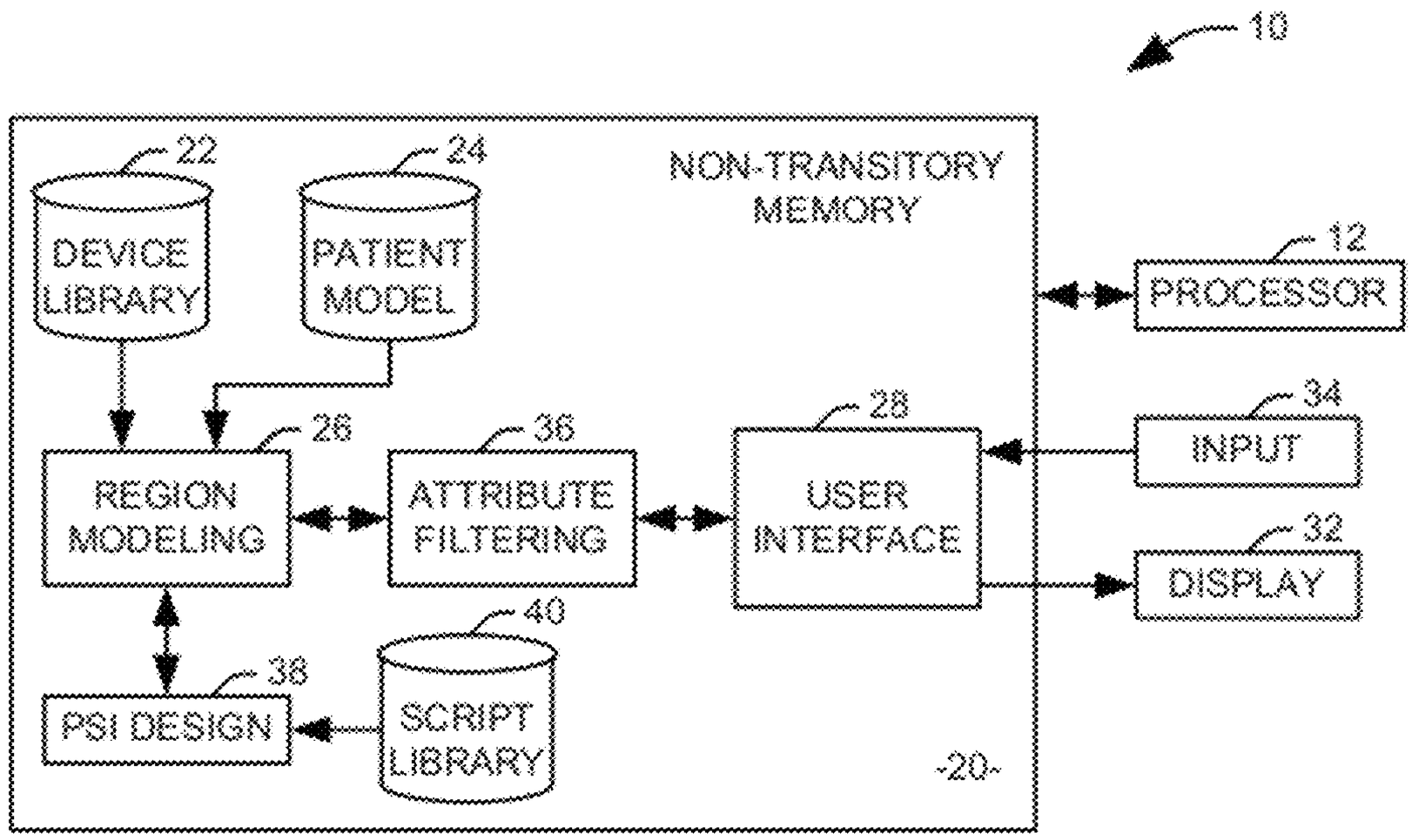

FIG. 1

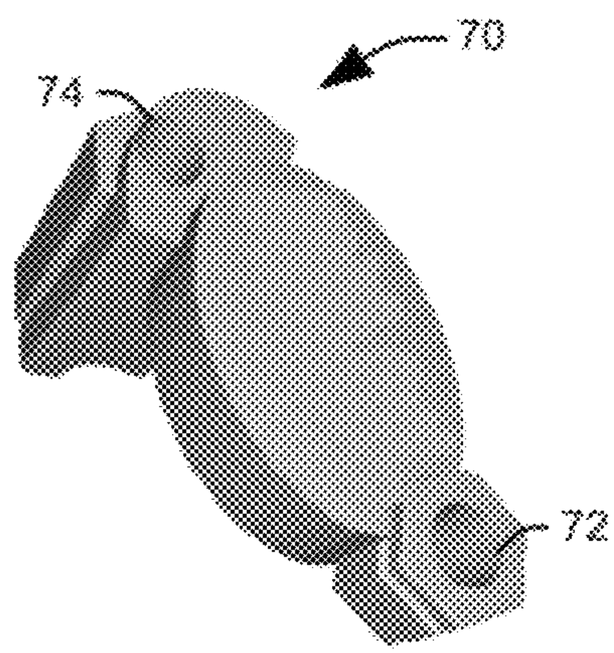

FIG. 3

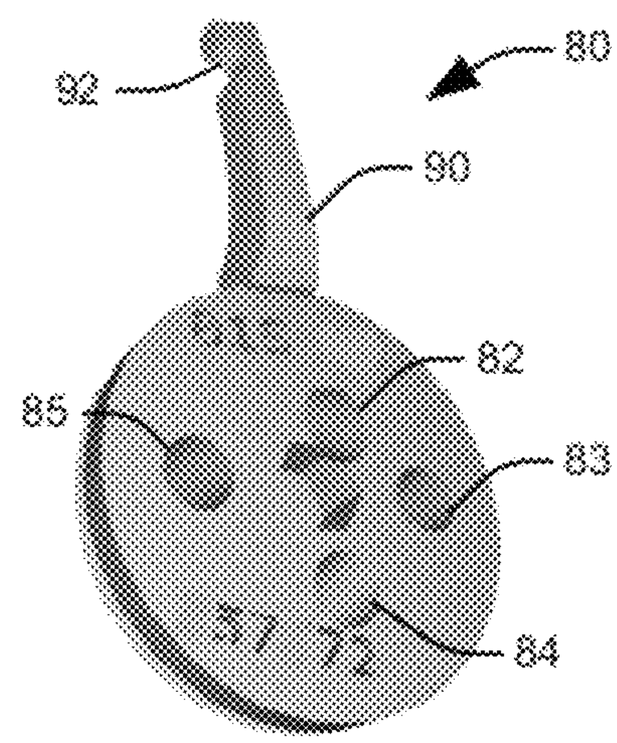

FIG. 4

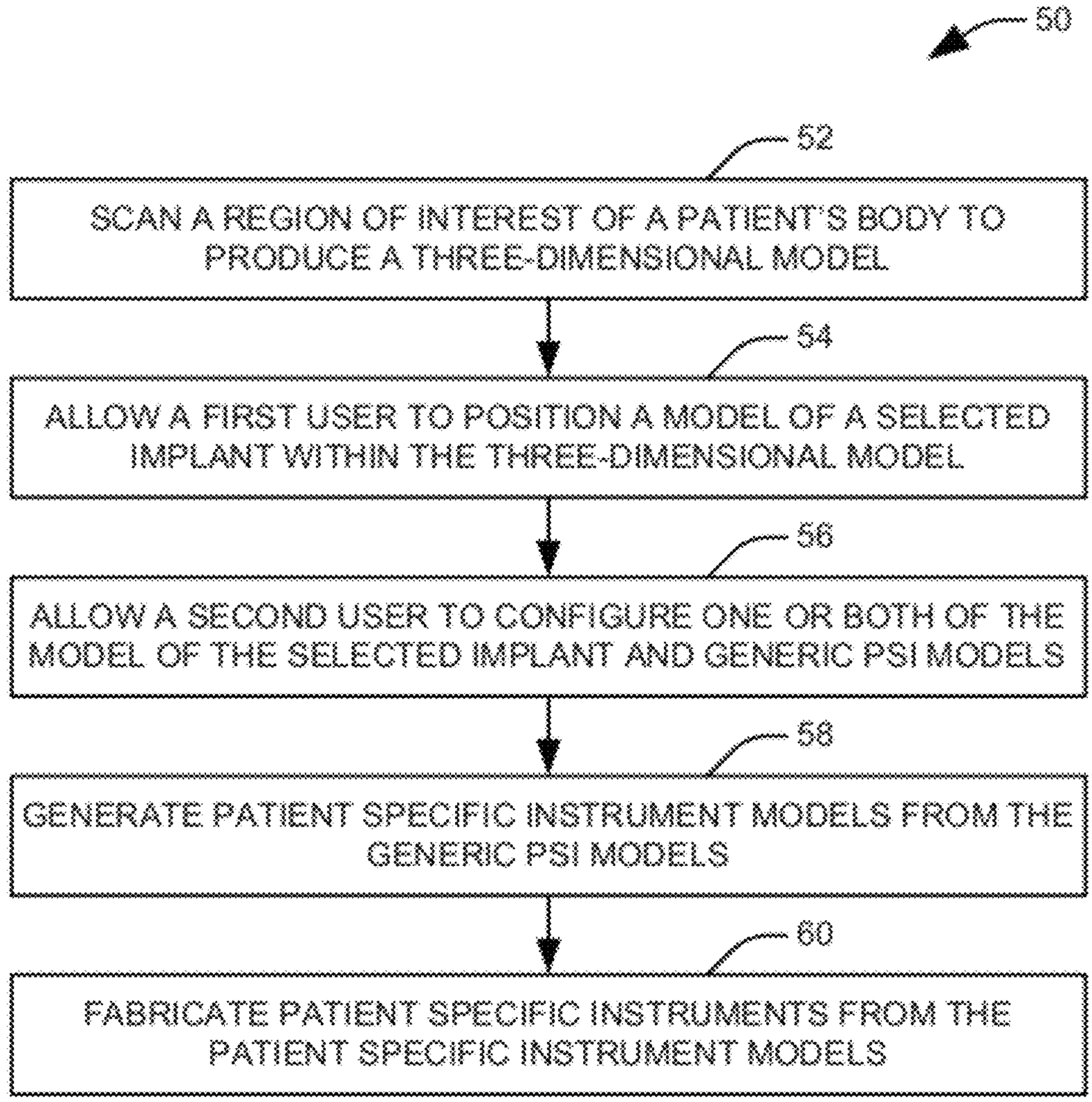
50
52
SCAN A REGION OF INTEREST OF A PATIENT'S BODY TO PRODUCE A THREE-DIMENSIONAL MODEL
54
ALLOW A FIRST USER TO POSITION A MODEL OF A SELECTED IMPLANT WITHIN THE THREE-DIMENSIONAL MODEL
56
ALLOW A SECOND USER TO CONFIGURE ONE OR BOTH OF THE MODEL OF THE SELECTED IMPLANT AND GENERIC PSI MODELS
58
GENERATE PATIENT SPECIFIC INSTRUMENT MODELS FROM THE GENERIC PSI MODELS
60
FABRICATE PATIENT SPECIFIC INSTRUMENTS FROM THE PATIENT SPECIFIC INSTRUMENT MODELS

FIG. 2

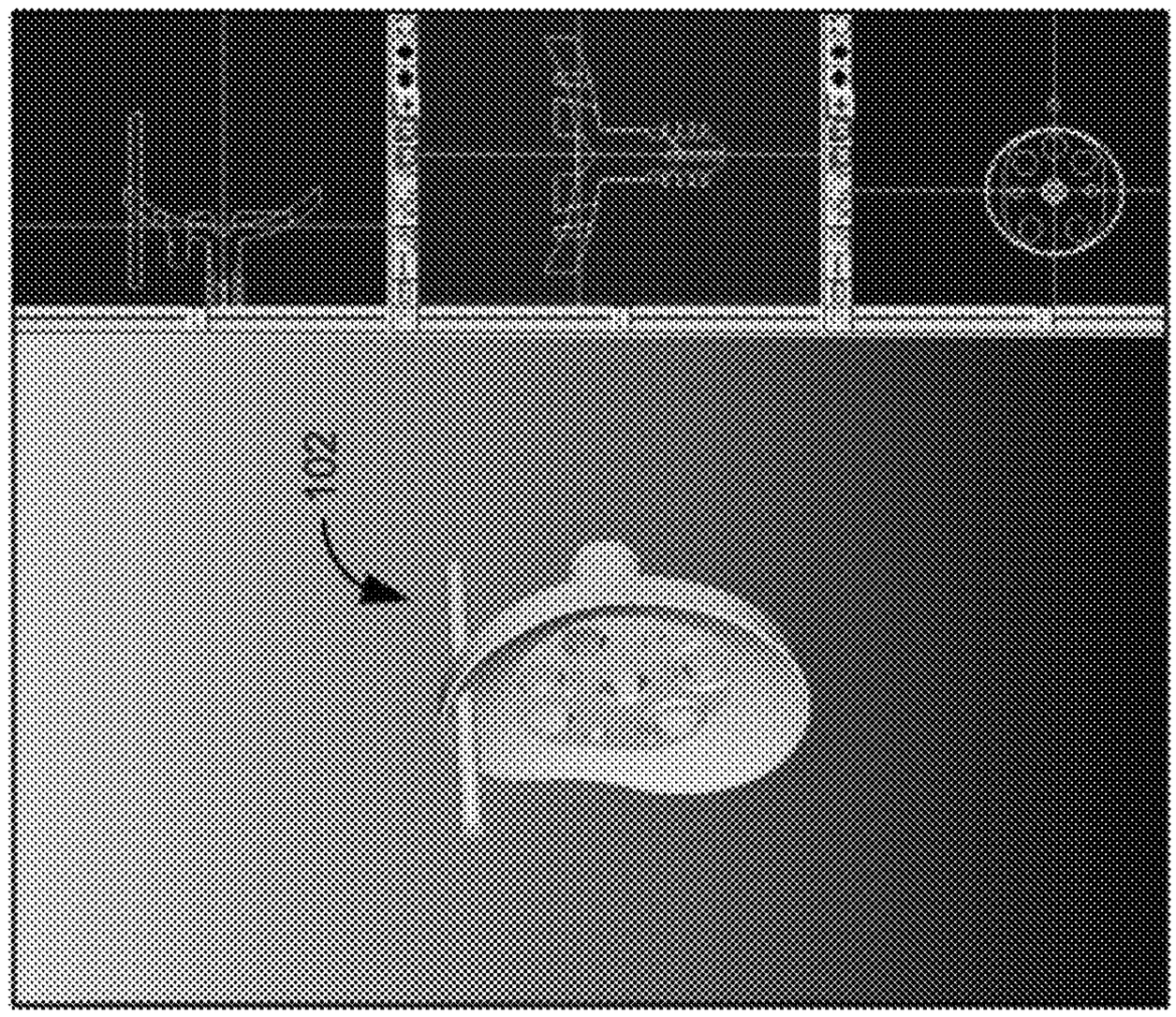

FIG. 6

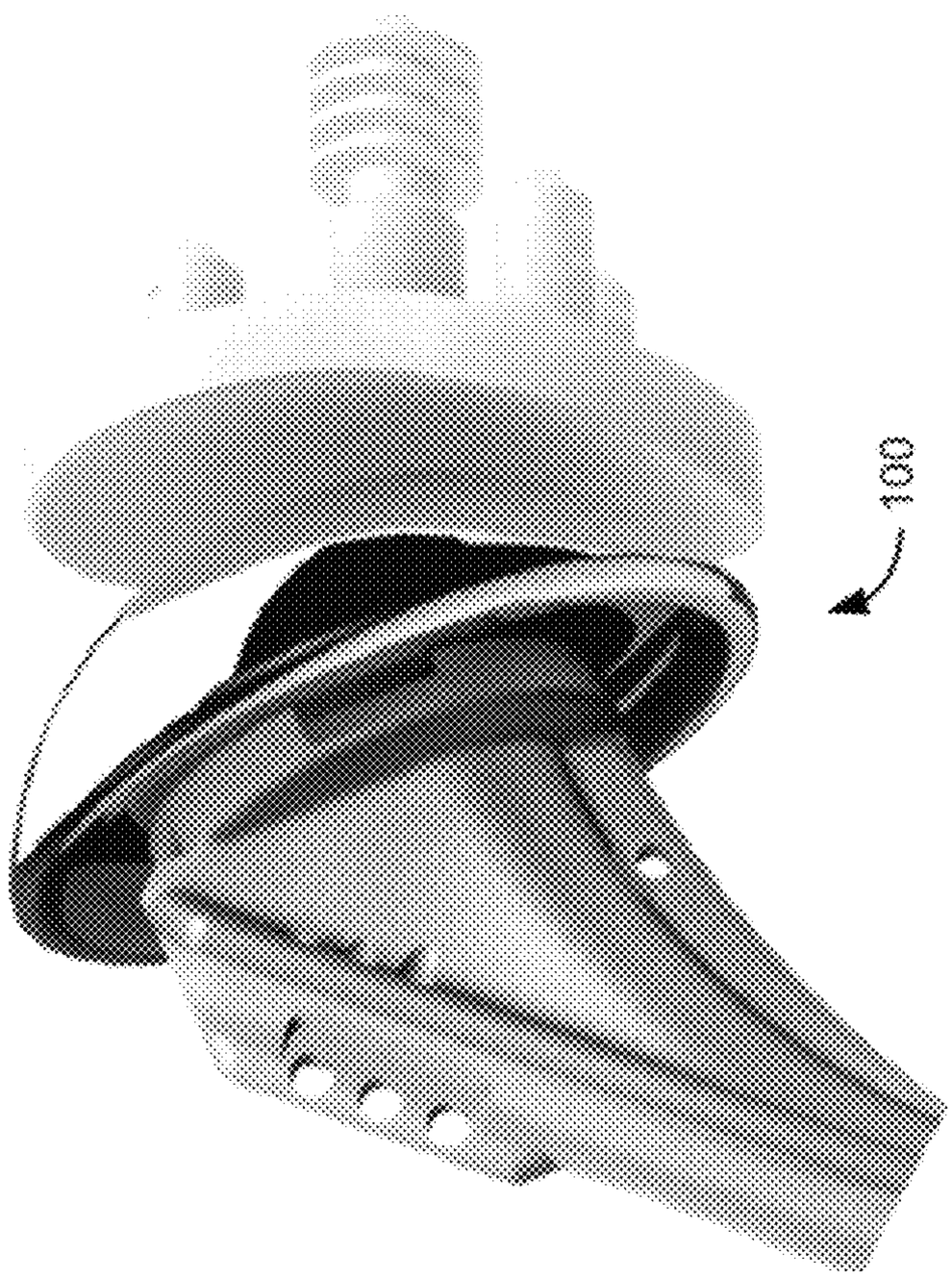

FIG. 5

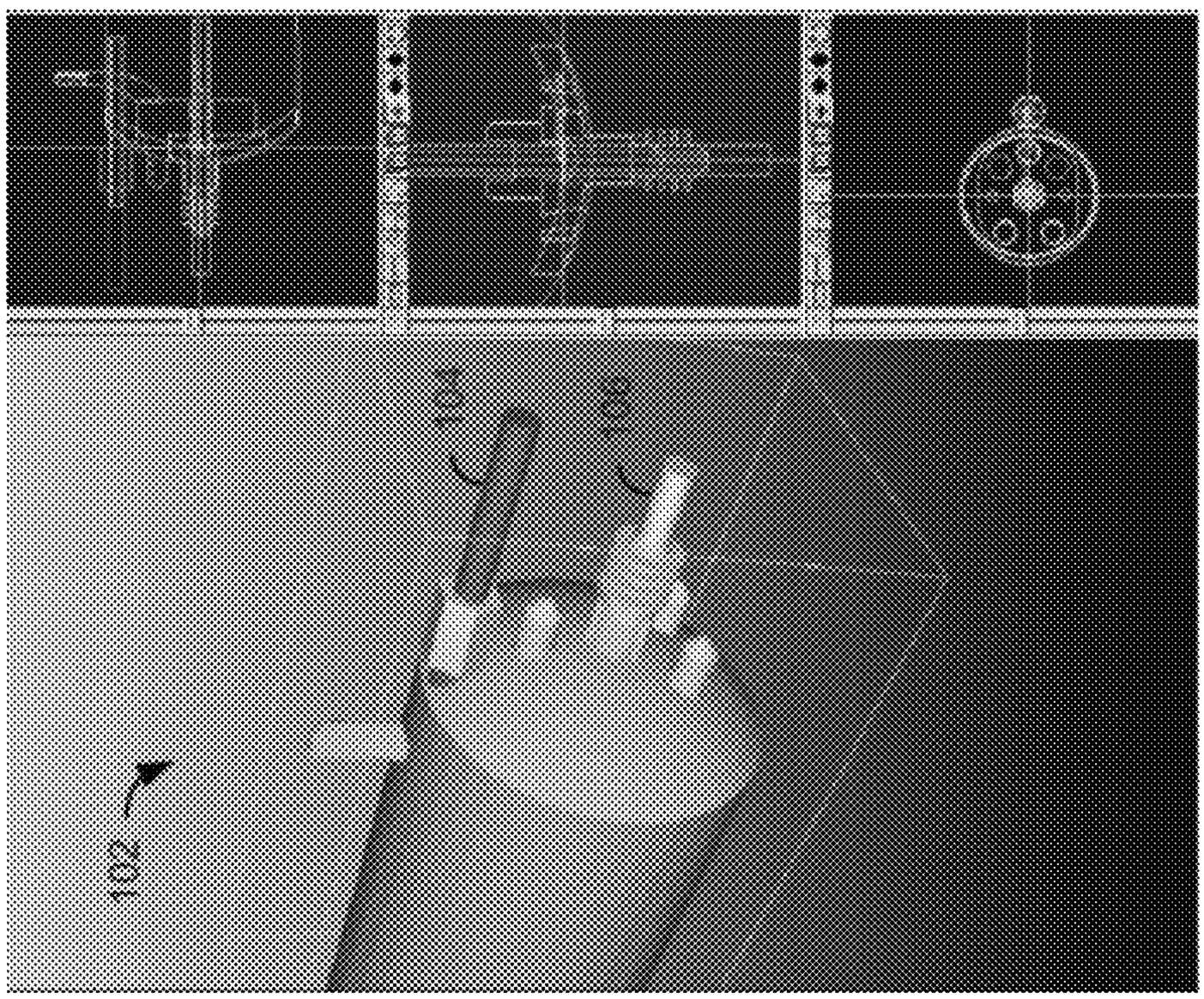

FIG. 7

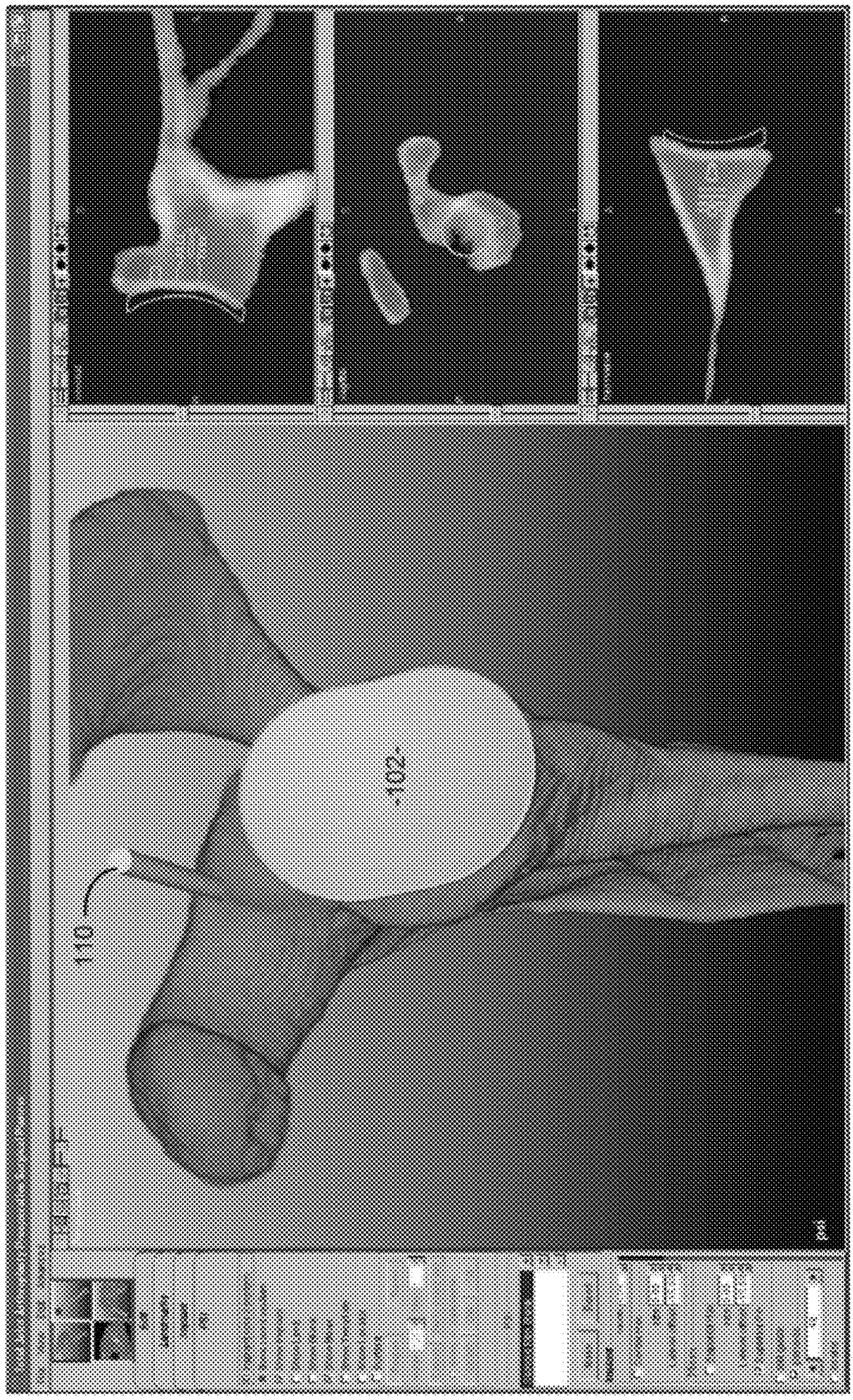

FIG. 8

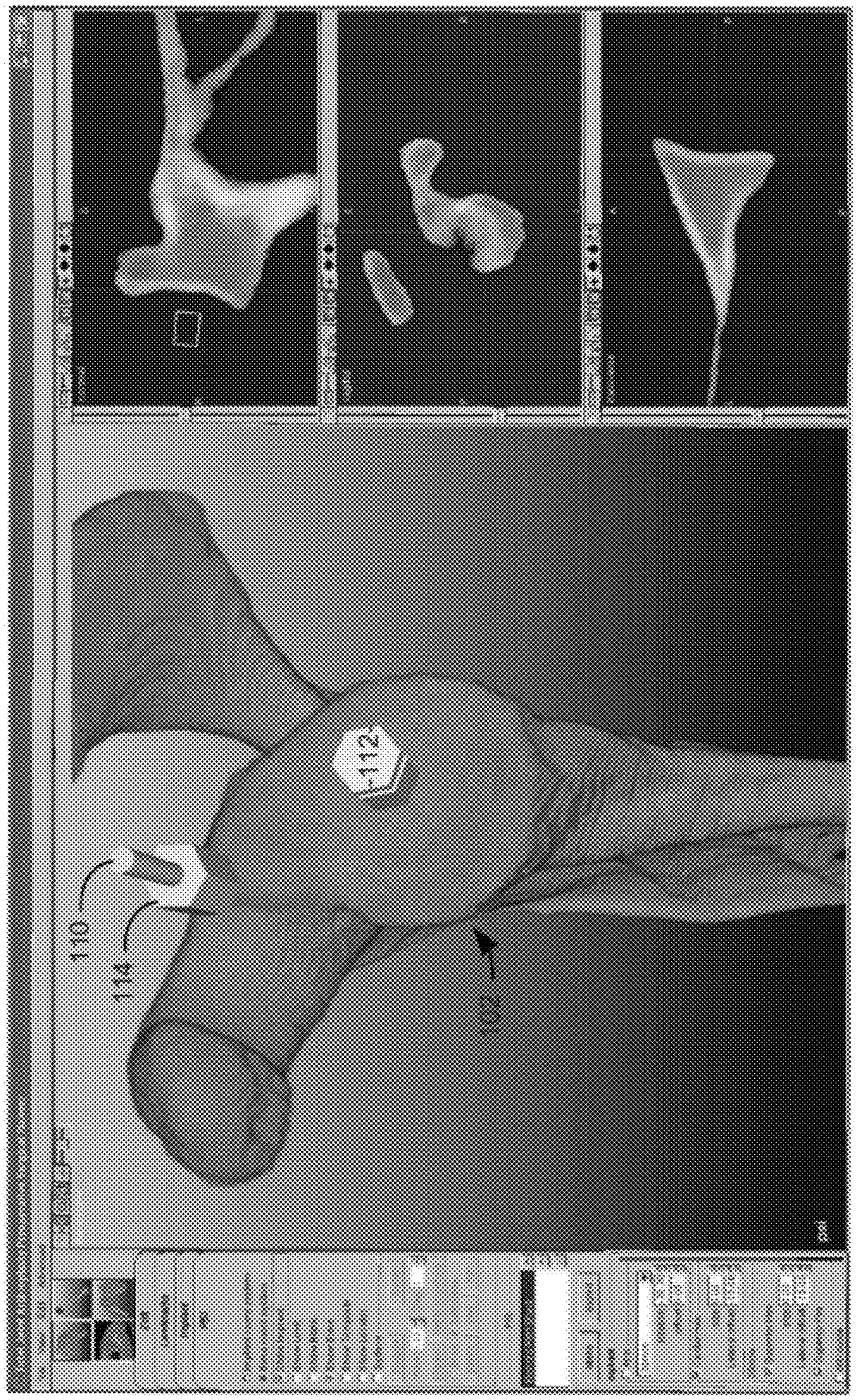

FIG. 9

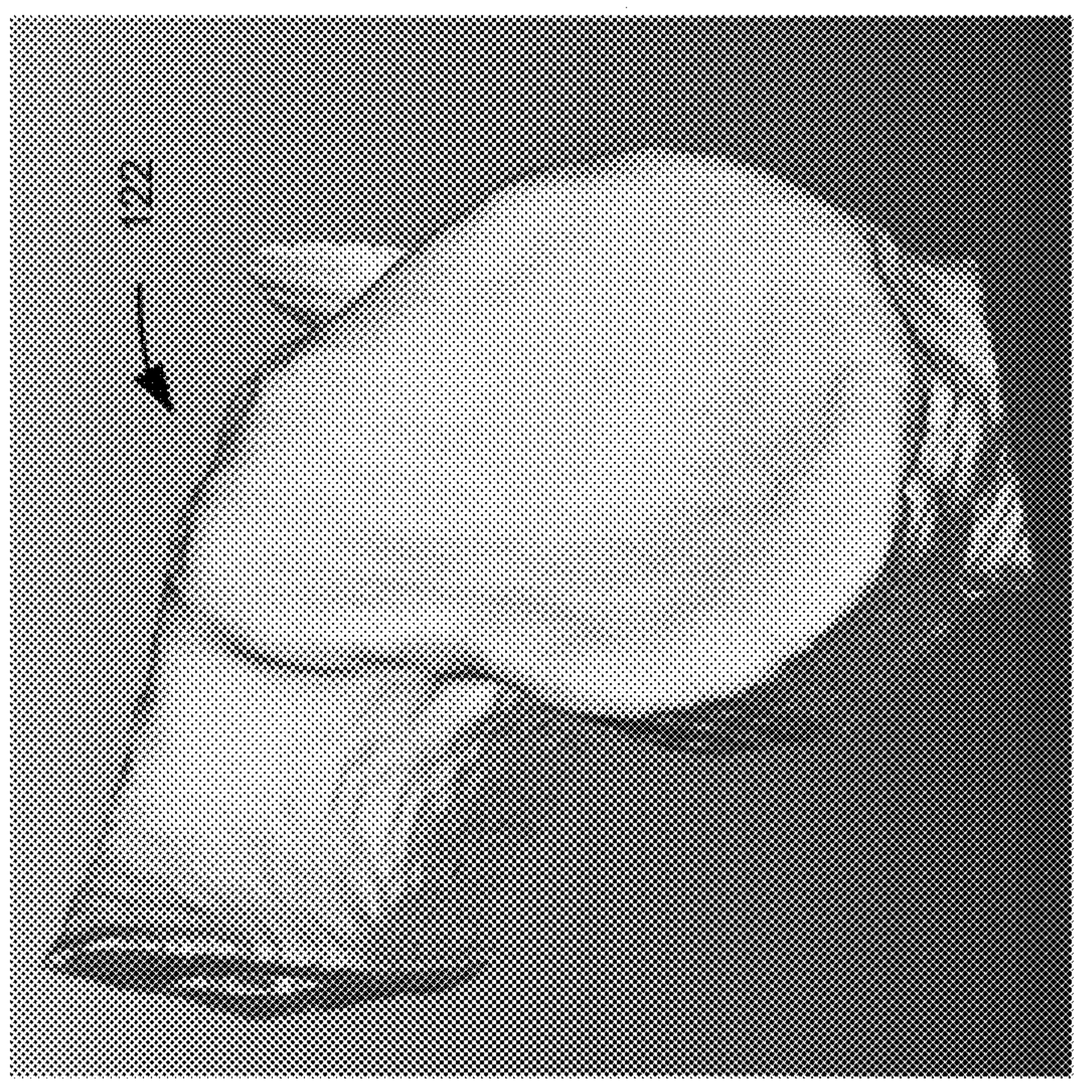

FIG. 11

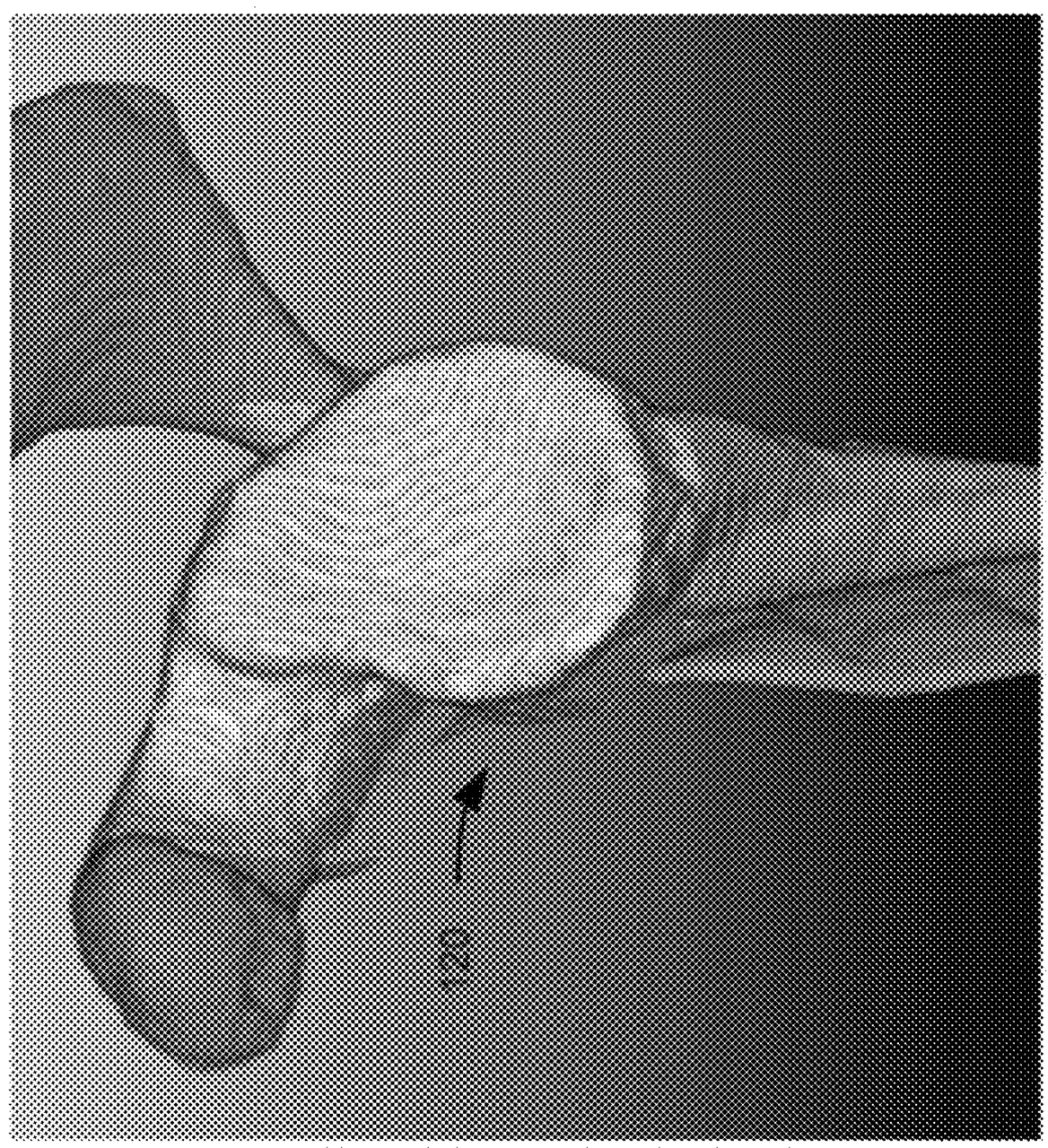

FIG. 10

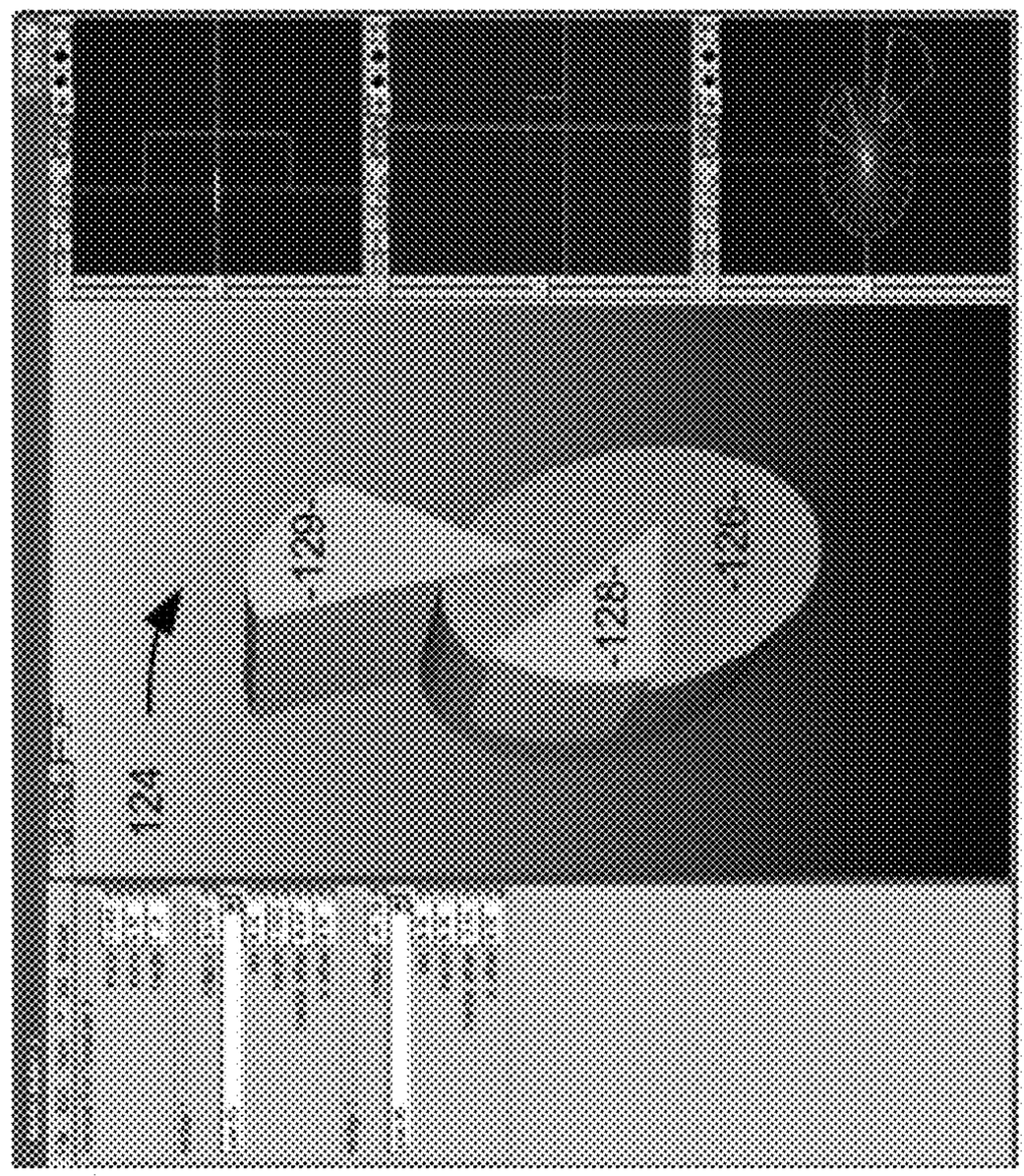

FIG. 13

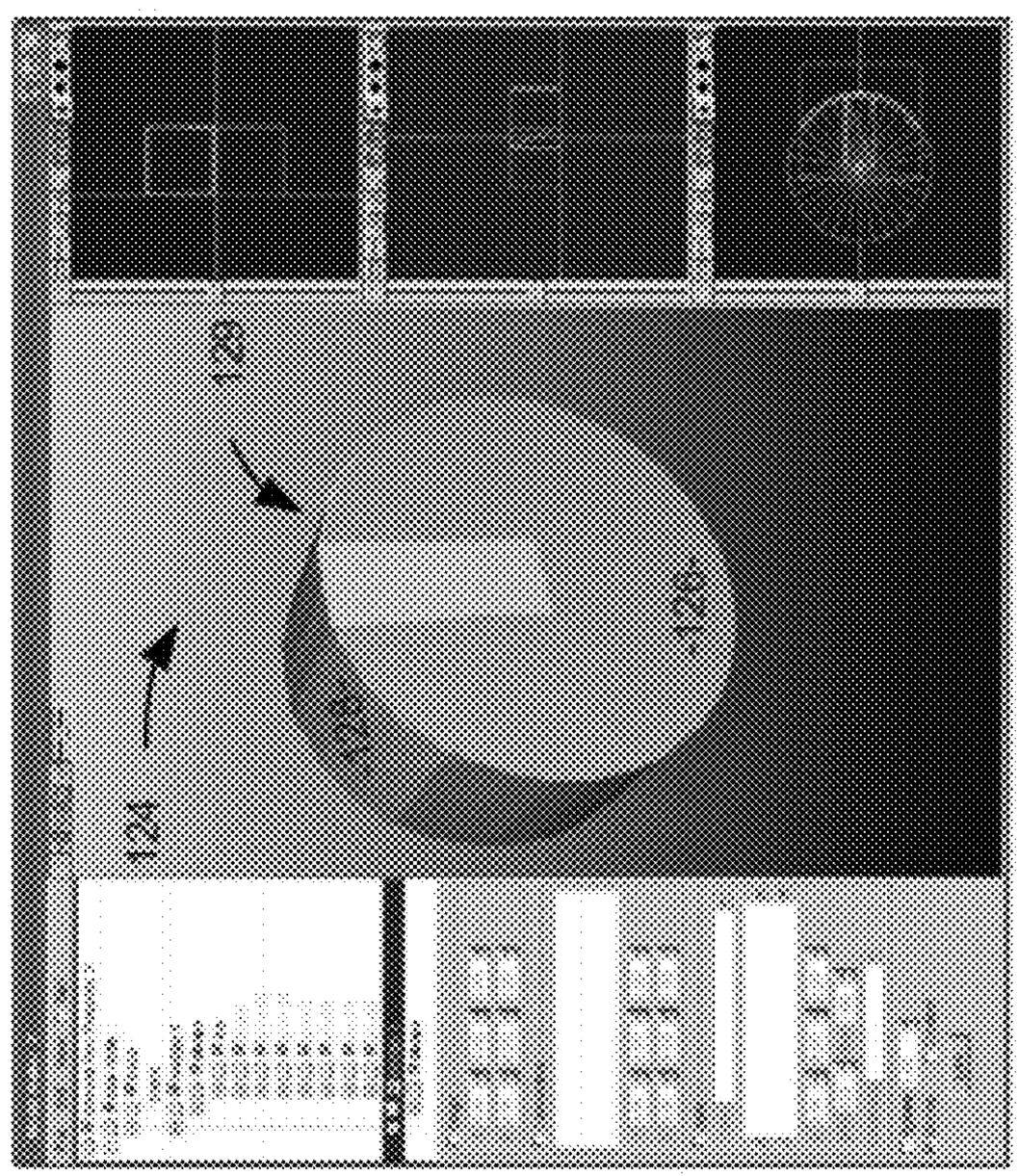

FIG. 12

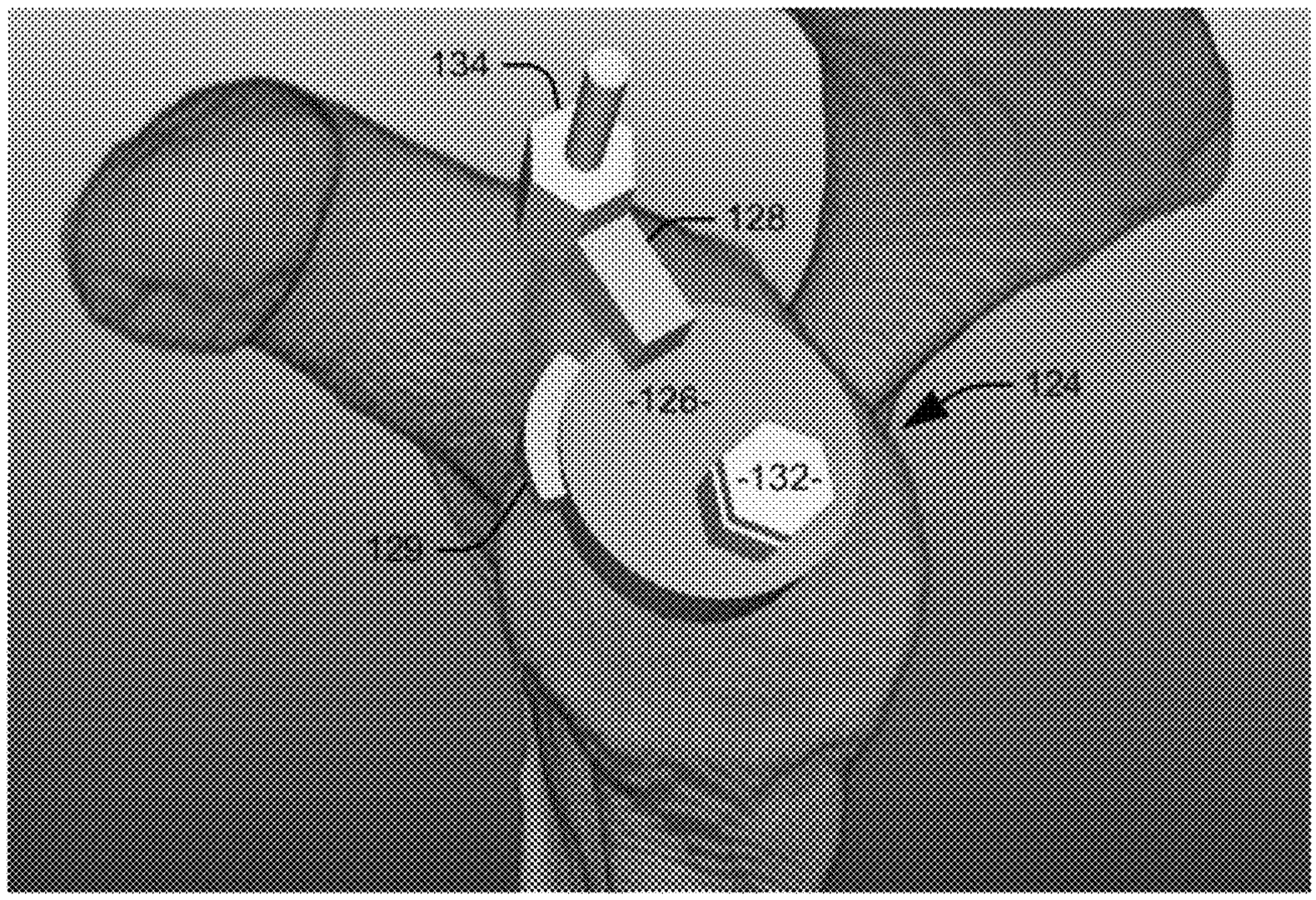

FIG. 14

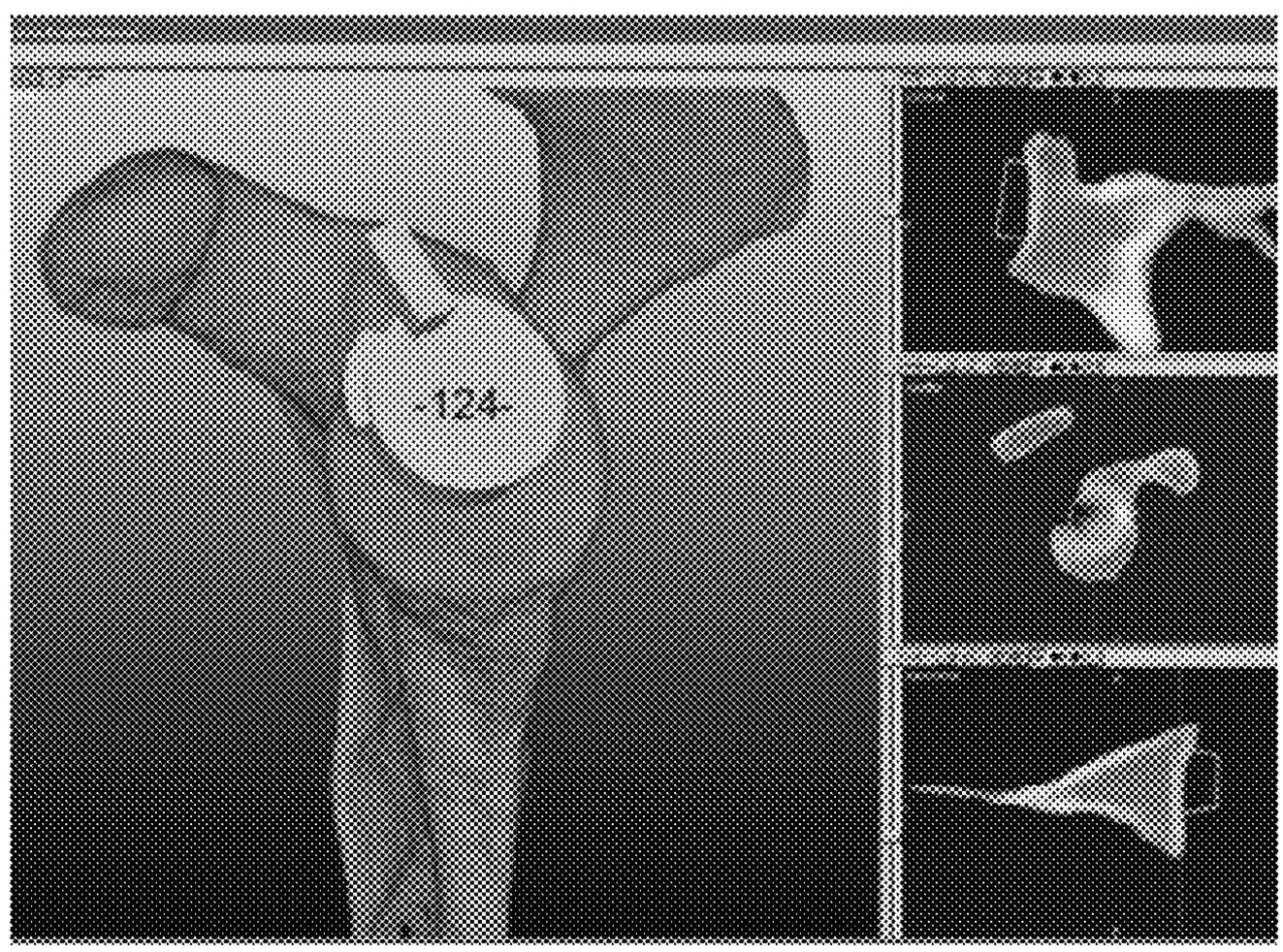

FIG. 15

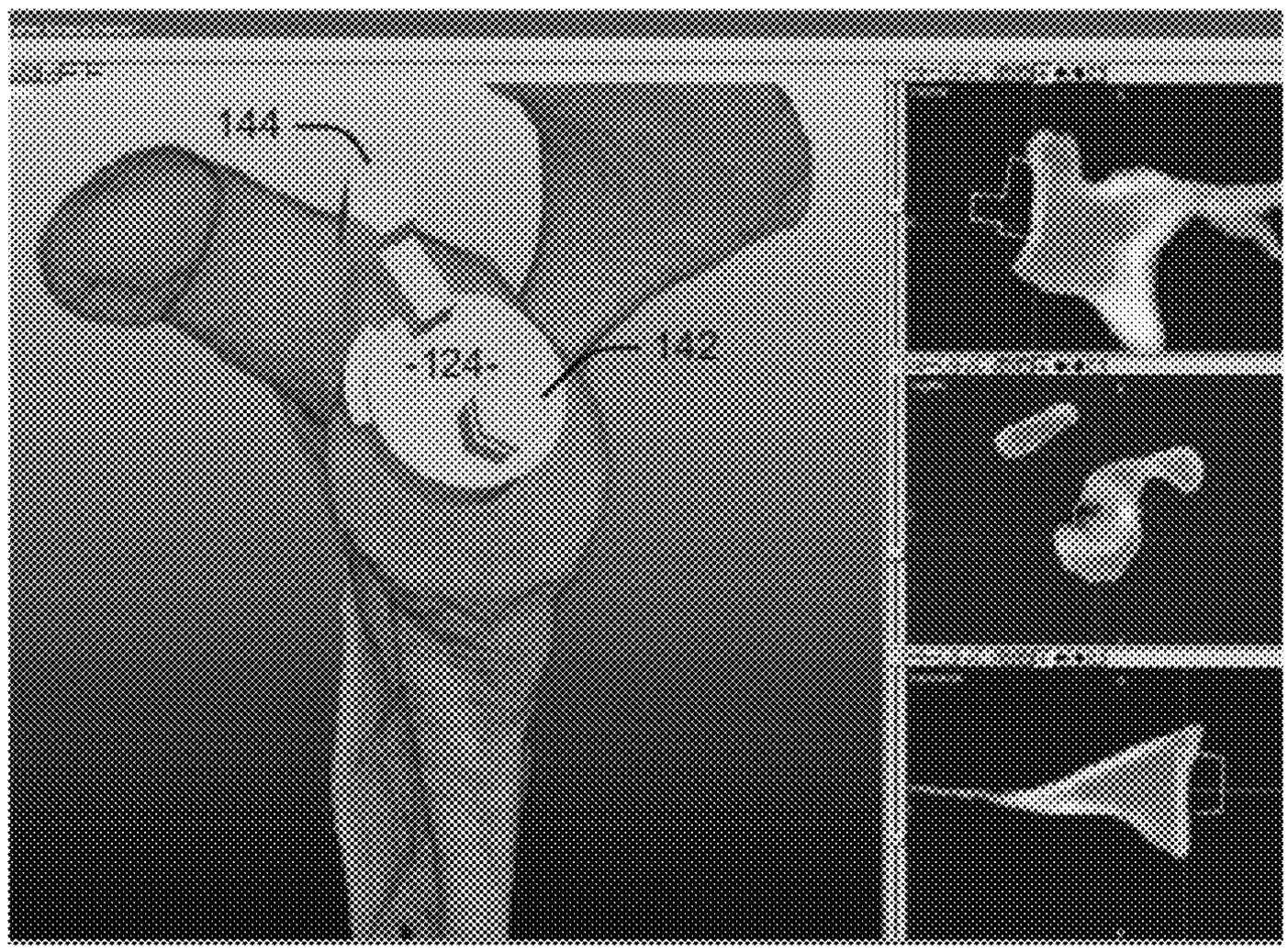

FIG. 17

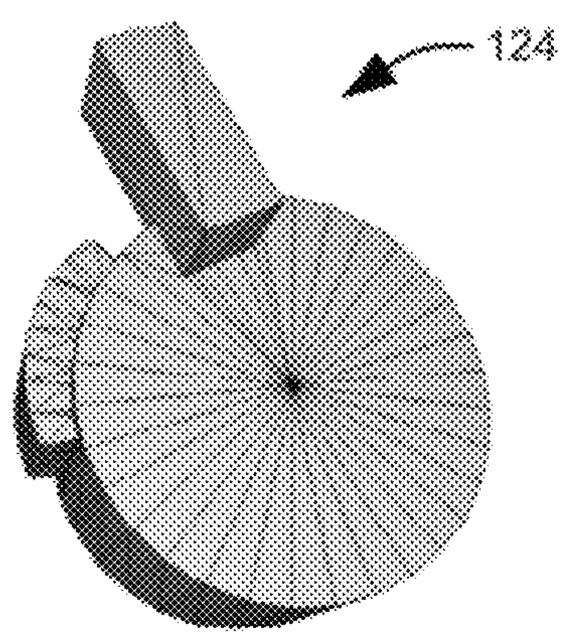

FIG. 16

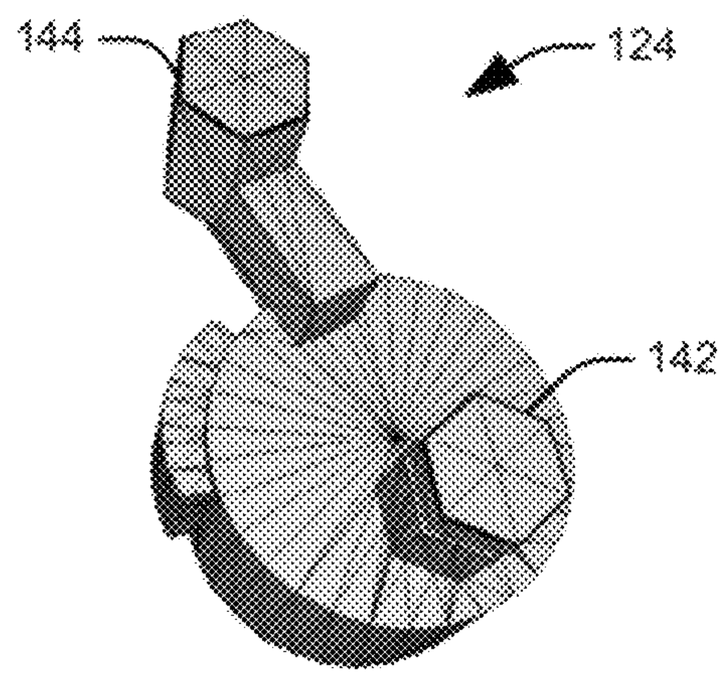

FIG. 18

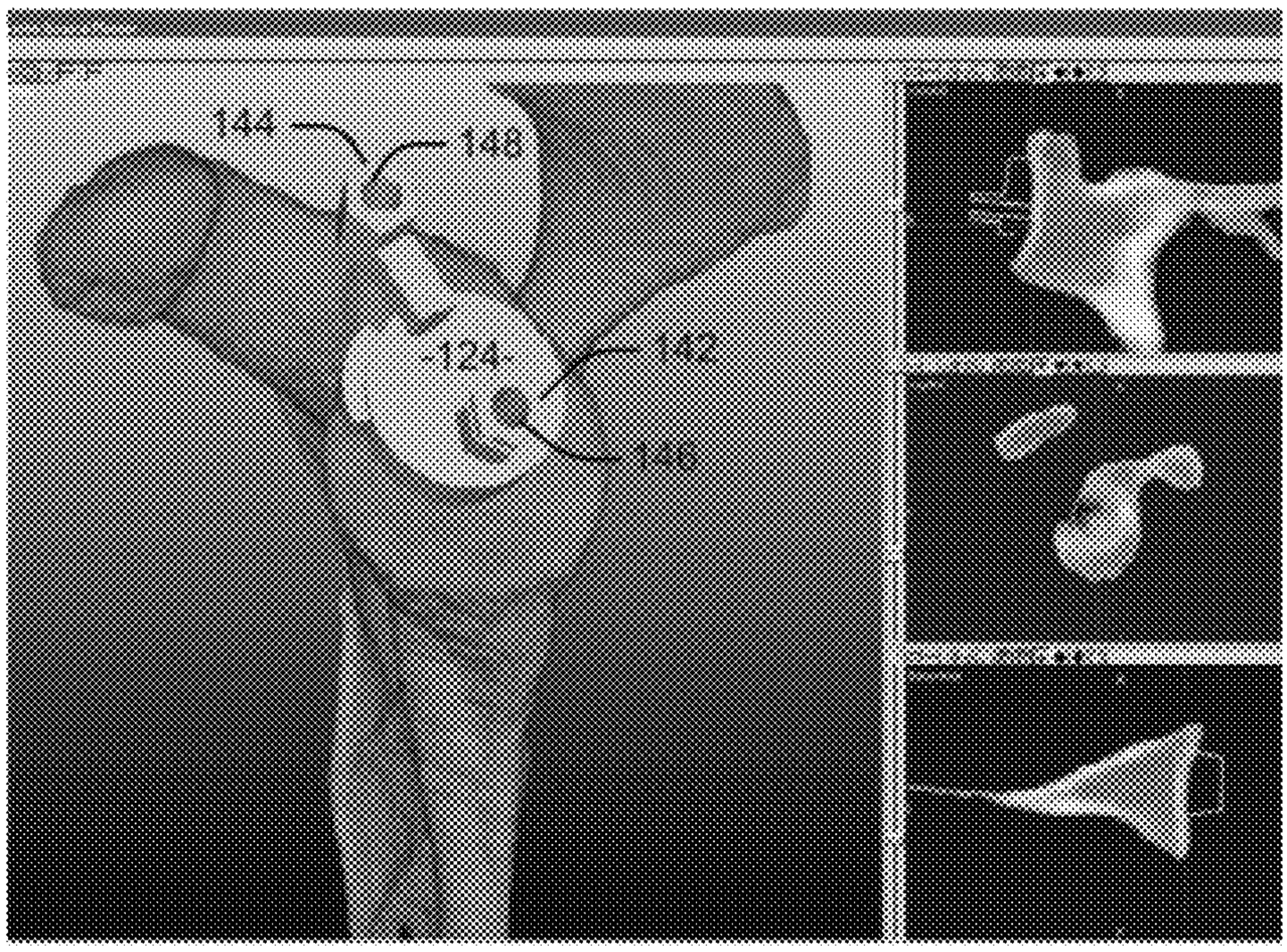

FIG. 19

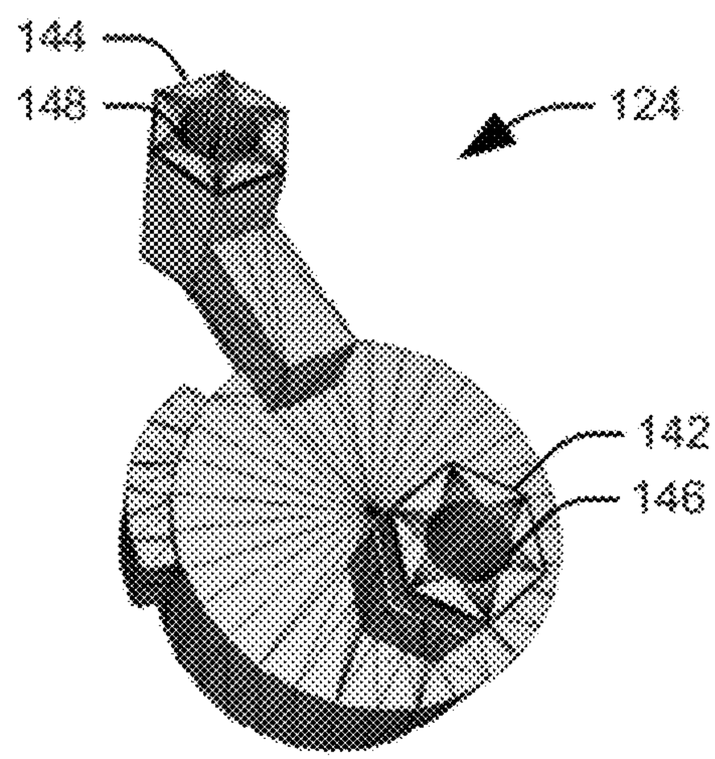

FIG. 20

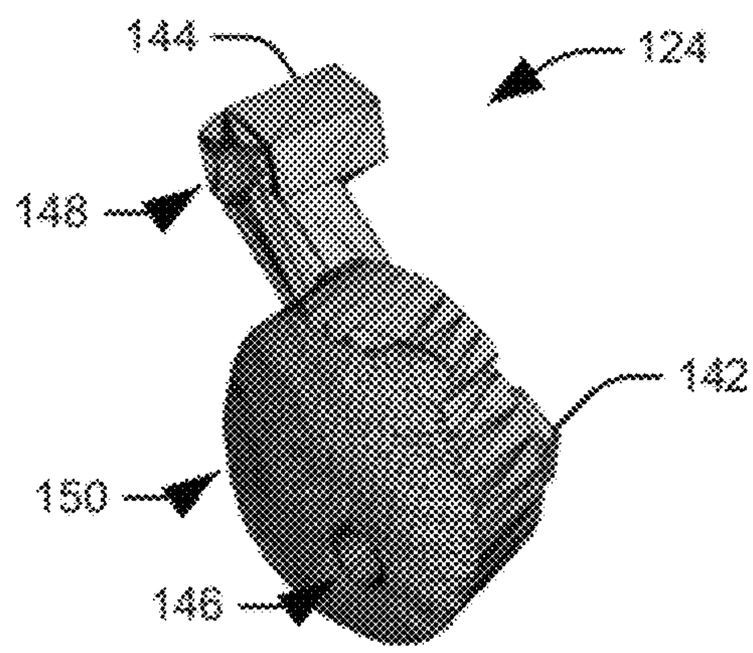

FIG. 22

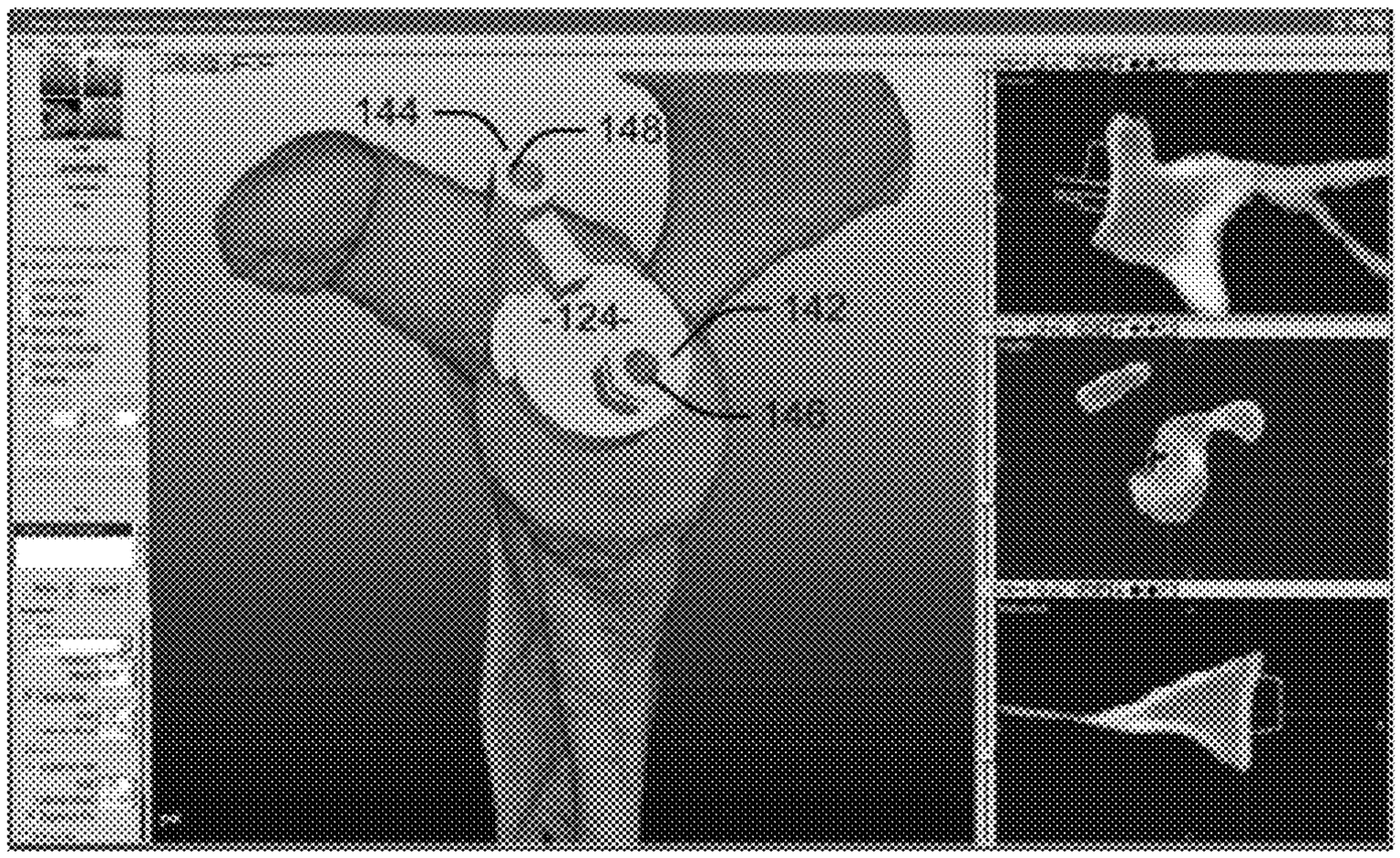
144
148
124
142
146

FIG. 21

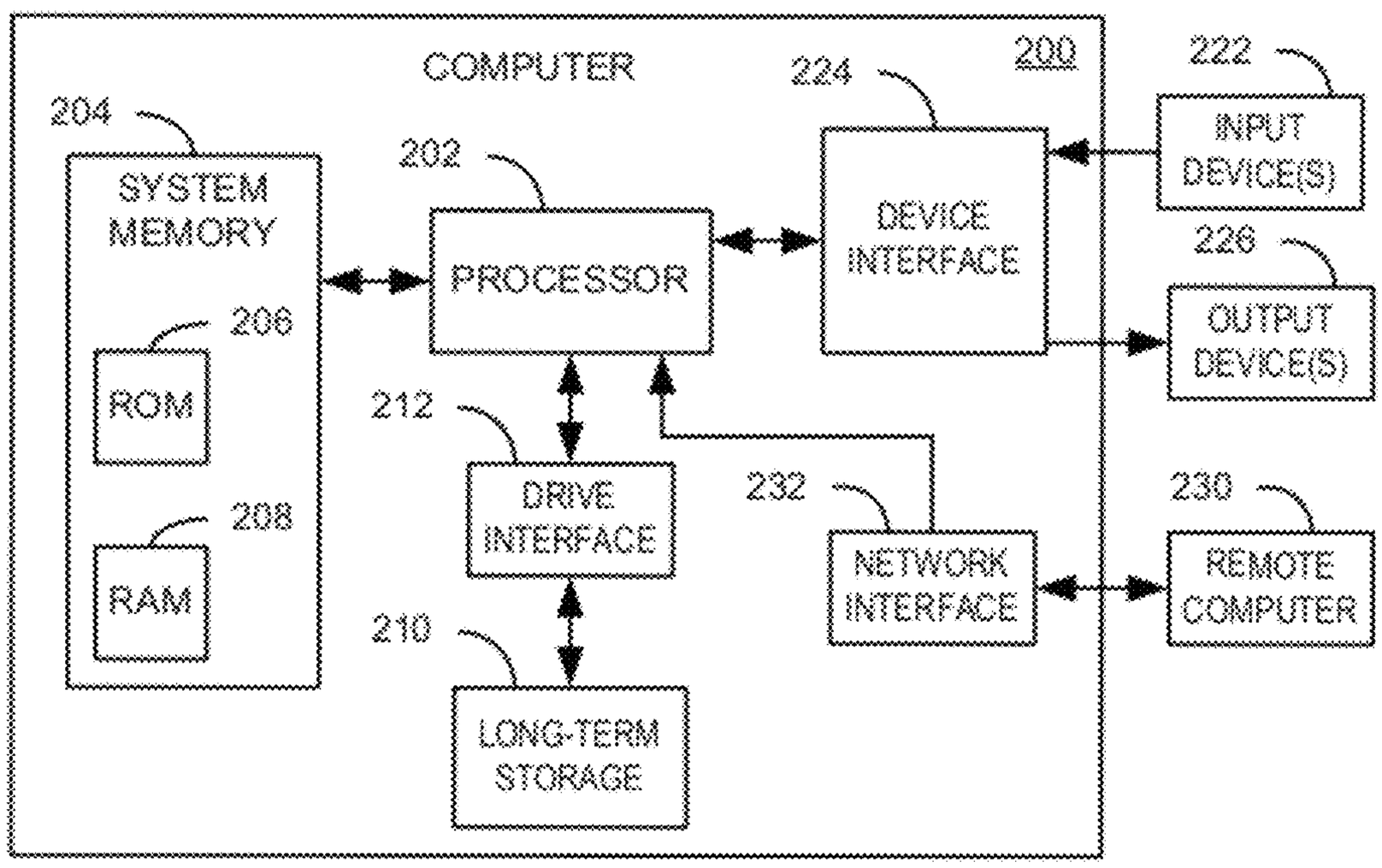
COMPUTER
200
204
SYSTEM MEMORY
206
ROM
208
RAM
202
PROCESSOR
212
DRIVE INTERFACE
210
LONG-TERM STORAGE
224
DEVICE INTERFACE
232
NETWORK INTERFACE
222
INPUT DEVICE(S)
226
OUTPUT DEVICE(S)
230
REMOTE COMPUTER

FIG. 23

GENERATING PATIENT SPECIFIC INSTRUMENTS FOR USE AS SURGICAL AIDS

CROSS-REFERENCE TO RELATED APPLICATION

This application claims the benefit of U.S. Provisional Patent Application No. 61/484,926, filed May 11, 2011, the entire contents of which are incorporated herein by reference.

TECHNICAL FIELD

The present invention relates to a preoperative planning system and, more particularly, to a system for generating patient specific instruments (PSIs) for use as surgical aids.

BACKGROUND OF THE INVENTION

For treatment of various problems with the shoulder, hip, or other body joint or bone (such as degenerative arthritis and/or traumatic injury), one method of providing relief to a patient is to replace the articulating surfaces with an artificial or prosthetic joint. In the case of a shoulder, the humerus and glenoid vault articulating surfaces are replaced. In the case of a hip, the femur and acetabulum articulating surfaces can be replaced. Both of these examples are of ball-and-socket type joints. Hinge-type joints, such as the knee or elbow, and static/fixed skeletal components, such as the long bones of the arm or leg, as well as interfaces such as those between spinal vertebrae and intervertebral discs, could also be subject to replacement and/or repair by the implantation of artificial or prosthetic components or other fixation devices related to the treatment of fractures, the sequelae of trauma, congenital pathology, or other issues causing a lack of ideal function. In such surgical procedures, pain relief, increased motion, and/or anatomic reconstruction of the joint are goals of the orthopedic surgeon. With multiple variations in human anatomy, prosthetic systems must be carefully designed, chosen, and implanted to accurately replicate the joints that they replace or the bone structures that they aim to change.

SUMMARY OF THE INVENTION

In accordance with a first aspect of the present invention, a non-transitory computer readable storing machine readable instructions is provided for generating a patient specific instrument (PSI) for use as a surgical guide. The machine readable instructions include a region modeling component configured to provide a three-dimensional model of a region of interest within a body from at least one imaging scan of the region of interest. A surgical planning component is configured to display a model of a selected implant and the three-dimensional model of the region of interest to a first user and allow the first user to position the model of the selected implant within the three-dimensional model of the region of interest. The model of the selected implant has at least one hidden attribute that is not visible to the first user. A PSI design component is configured to provide a patient specific instrument model from a generic PSI model according to the position of the model of the selected implant within the three-dimensional model of the region of interest and the at least one hidden attribute.

In accordance with another aspect of the present invention, a computer-implemented method is provided for generating a patient specific instrument (PSI) for use as a surgical guide. A region of interest within a body of a patient is scanned to provide a three-dimensional model of the region of interest. A first user is allowed to position a model of a selected implant with the three-dimensional model of the region of interest via a graphical user interface. A patient specific instrument model is generated from a generic PSI model according to the position of the model of the selected implant within the three-dimensional model of the region of interest and the position of at least one extension of the model that is not visible to the first user. The patient specific instrument is fabricated according to the patient specific instrument model.

In accordance with yet another aspect of the present invention, a system is provided for generating a patient specific instrument (PSI) for use as a surgical guide. The system includes a non-transitory computer readable medium storing machine readable instructions for performing a method, and a processor configured to execute the machine readable instructions. The method includes allowing a first user to position a model of a selected implant with the three-dimensional model of the region of interest, and allowing a second user to alter a first attribute of the model of the selected implant that is not visible to the first user. A patient specific instrument model is generated from a generic PSI model according to the positioning of the model of the selected implant by the first user, the alteration of the first attribute by the second user and a second attribute that is not visible to the first user or the second user.

BRIEF DESCRIPTION OF THE DRAWINGS

For a better understanding of the invention, reference may be made to the accompanying drawings, in which:

FIG. **1** illustrates a system for defining patient specific instrument assemblies in accordance with an aspect of the present invention;

FIG. **2** illustrates a method for generating one or more patient specific instruments (PSIs) for use as surgical aids in the installation of a stock implant within a region of interest within a body of a patient;

FIG. **3** illustrates a first physical instantiation of a patient specific instrument model in accordance with an aspect of the present invention;

FIG. **4** illustrates a second physical instantiation of a patient specific instrument model in accordance with an aspect of the present invention;

FIG. **5** illustrates one example of a prosthetic implant device;

FIG. **6** illustrates an example of a device model for the prosthetic device illustrated in FIG. **5** as it might appear to a first user using a system in accordance with an aspect of the present invention;

FIG. **7** illustrates the device model of FIG. **6** with all of its associated attributes shown;

FIG. **8** illustrates the model of FIG. **6** overlaid on a model of a region of interest in a patient;

FIG. **9** illustrates the device model overlaid on the model of the patient's scapula as the device model would appear to a second user;

FIG. **10** illustrates a selection of a surface on a region of interest;

FIG. **11** illustrates a surface model of the region of interest created from the selected surface of FIG. **10**;

FIG. **12** illustrates one example of a generic PSI model in accordance with an aspect of the present invention;

FIG. **13** illustrates the generic PSI model of FIG. **12** after configuration;

FIG. **14** illustrates the generic PSI model of FIGS. **12** and **13** positioned within the region of interest including attributes visible to a second user;

FIGS. **15** and **16** illustrate the generic PSI model before prior to the execution of a script for creating a final patient specific instrument;

FIGS. **17** and **18** illustrate the generic PSI model of FIGS. **15** and **16** after a union with a model of two hex nuts;

FIGS. **19** and **20** illustrate the generic PSI model of FIGS. **17** and **18** after the subtraction of two drill guides;

FIGS. **21** and **22** illustrate the generic PSI model of FIGS. **19** and **20** after the subtraction of a surface model from one surface of the generic PSI model; and

FIG. **23** is a schematic view of a computer system that can be employed to implement systems and methods described herein, such as based on computer executable instructions running on the computer system.

DESCRIPTION OF EMBODIMENTS

A system in accordance with an aspect of the present invention is configured to allow a user, such as a surgeon, to place a simulated implant component into a model of a region of interest on a patient. It will be appreciated that the region of interest can comprises any region of a human or non-human patient's body in which it might be desirable to perform a surgical intervention. The model of the region of interest can include any form of tissue that might be of interest in conducting the surgical intervention. The patient model can be derived from a preoperative imaging procedure, such as a computed tomography (CT) scan, ultrasound imaging, a magnetic resonance imaging (MRI) procedure, a structured light, 3-D scan, a laser imaging procedure, or from a composite of multiple images derived from such scans, including stereographic composites. Some implants are an assembly of multiple interdependent pieces, and in these cases the implant assembly can be configured according to manufacturer specifications. The location and configuration of the implant in the virtual tissue can represent a preoperative surgical plan, allowing the user to customize the placement of the implant to the anatomy of the patient.

To this end, the system can extract a representation of the region of interest from the imaging data. A user can place a generic model, referred to as a "blank," onto a surface of the region of interest. If the blank has multiple pieces, those pieces can also be configured. The system can then create a single object from the blank and all its pieces in its current configuration and digitally subtract the surface of the region of interest from the object to create a unique "template" model that exactly fits the a contour of the tissue, such as a surface of a bone, in a single location. In another implementation, the blank can be generated directly from the region of interest by selecting a portion of the tissue surface and extruding it along the surface normal, or in another direction, to provide a model that fits the surface. The system can then augment the template, adding or subtracting features (e.g., bosses, holes, slots or platforms) according to the specification of the implant in order to create a "Patient Specific Instrument" model. It will be appreciated that some or all of these features can be produced from "hidden" attributes of the simulated implant component that are not visible to one or more users of the system, but interact with the object to create a template useful for guiding the surgical procedure. It will be appreciated that the hidden attributes of a given component can be inherent to the component, such that they are not added by any of the plurality of users. Some hidden attributes will be visible to and configurable by one or more users, but attributes can be hidden from all users. This PSI model can be manufactured using rapid prototyping technology to create a physical part. This part will fit on the patient bone in one specific location, allowing standard reusable instruments to use the PSI guiding structures, such as drill holes, guide holes for insertion of other structures, cutting slots, protrusions, bridges, and labels, as landmarks in order to prepare the bone so the selected implant can be placed according to the plan.

The term "stock" is used herein to indicate that the component indicated is not custom-manufactured or configured for the patient, but is instead provided as a standard inventory item by a manufacturer. A particular stock component may be selected automatically by the system or manually by the user from a product line range of available components, optionally with the user specifying a desired configuration, general or particular size (e.g., small, medium, large, or a specific measurement), material, or any other characteristic of the component. Indeed, the stock component could be manufactured only after the user has selected the desired options from the range of choices available. However, the stock component is differentiated from a custom-manufactured component in that the stock component is agnostic regarding a particular patient anatomy during the design and manufacturing processes for an instrument, prosthetic implant, or other component intended for that patient, while the patient anatomy is an input into at least one design and/or manufacturing process for a custom-manufactured component. The following description presumes the use of a stock prosthetic implant and stock instrument, though one of ordinary skill in the art will be able to provide for the use of the present invention with a custom-manufactured prosthetic implant or instrument, instead.

FIG. **1** illustrates a system **10** for defining patient specific instrument assemblies in accordance with an aspect of the present invention. The system includes a processor **12** and a non-transitory computer readable medium **20** configured to store data and machine readable instructions. It will be appreciated that by a "non-transitory computer readable medium," it is meant one or more physical computer readable media, local to the processor or connected via an appropriate bus or network connection, storing the data and instructions associated with the illustrated system **10**. The non-transitory computer readable medium stores a device library **22** containing a plurality of device models representing potential devices for insertion into a region of interest on a patient or for use in performing the insertion of another device. It will be appreciated that each device model can be explicitly defined as a three-dimensional figure having defined boundaries within a local coordinate system or implicitly defined according to a generic model and a set of parameters defining a particular instance of the generic model. For example, a cylindrical device model might be stored as a set of parameters representing the radius, length, and number of sides for a generic cylinder model. In one implementation, each implant model is represented as a mesh object.

Imaging data representing the region of interest can be provided to the system from an external imaging device (not shown) and stored on the non-transitory computer readable medium as a patient model **24**. Specifically, the patient model **24** can comprise a three-dimensional representation of one or more structures in the region of interest. In one

implementation, the patient model can be an object representing a bone or joint of the patient.

A region modeling component **26** is configured to provide a three-dimensional representation of the region of interest, including at least a portion of the patient model **24** and device models from the device library **22**. In accordance with an aspect of the present invention, a graphical user interface **28** is provided to allow a first user to view the device models and the patient model **24** at an associated display **32** and manipulate the position and orientation of at least one of the device models within the region of interest via an appropriate input device **34**, such that the relative position and orientation of the at least one device model and the portion of the patient model **24** are altered. For example, the first user can review the portion of the patient model **24** and manipulate the position and orientation of the device model as to simulate the placement of an implant within the bone or joint represented by the patient model **24**. In one embodiment, the first user can be a member of a surgical team responsible for implantation of the implant.

A given device model can have one or more attributes, that is, portions of the device model that do not directly correspond to the real-world device. Attributes can include extensions to the three-dimensional device model, apertures or depressions in the surface of the device model, additional models associated with the model, point locations, direction vectors, planes, labels, and categories. In accordance with an aspect of the invention, a model can include attributes that are not visible to one or more users, referred to as "hidden attributes". It will be appreciated that a hidden attribute of a model can be made selectively visible to users, such that an attribute can be visible to the first user but not to a second user. Some hidden attributes can be hidden from all users, for example, when adjustment of these attributes by a surgeon or technician would not be helpful. And, of course, some attributes can be visible to all users. To this end, an attribute filtering component **36** restricts the display of each model according to associated privileges of the user, such that the model displayed to the user contains no attributes hidden from the user.

In one implementation, the first user, generally a surgeon, can position the implant at a desired location with the model of the region of interest, and a second user, generally a technician, can manipulate one or more attributes associated with the implant and position a patient specific instrument (PSI) blank at a point within the region of interest suitable for placement of a physical patient specific instrument. It will be appreciated, however, that a "user" can also be an automated program for performing a particular function. Attributes can be hidden from an automated "user" simply by providing the automated system with a representation of the device model lacking the hidden attributes. For some applications, the attribute filtering component **36** can also work to prevent a given user from altering certain model attributes that are visible to the user. For example, the technician may be prohibited from altering one or both of the placement and orientation of an implant model placed by the surgeon even though the implant model is visible to the technician.

Once the PSI blank has been placed, the model is provided to a PSI design component **38** to generate a PSI for the implant. The PSI design component **38** can generate a model of the PSI from the PSI blank, the placement of the implant and its associated attributes, and the patient imaging data. In the illustrated implementation, the PSI blank is represented as a mesh object, and the PSI model can be formed through a series of geometry processing operations, on the patient imaging data, the implant and its various attributes, and the blank. It will be appreciated that the geometry processing operations can include Boolean operations between mesh objects, mesh "cleaning" operations, such as patching holes, removing extraneous disconnected surfaces, and similar processes, movement, scaling, rotation, or transformation (e.g., via a parameterized transform function) of objects or portions of objects, and creating a specific object from a parametric/implicit representation in a generic model. A series of geometry processing operations necessary to perform a discrete task (e.g., to create a blank having a desired shape and size, contour the blank to a portion of the patient's anatomy, etc.) can be stored as a script within a library of scripts **40**. Accordingly, to produce a PSI model for a given implant, one or more scripts associated with the implant can be executed, representing the series of geometry processing operations necessary to produce a PSI specific to the patient's anatomy, the selected placement of the implant, and the placement of any structures auxiliary to the implant (e.g., guide pins, hex bosses, etc.). The resulting PSI model can be displayed to a user through the user interface **28** and saved in an appropriate format for use in fabricating the modeled PSI. In one implementation, the PSI model can be provided directly to a three-dimensional printer to produce the modeled implant.

In one implementation, the PSI blank can be a configurable mesh object, but it will be appreciated that the PSI blank can be implemented as an implicit model, such as a brep (boundary representation) or nurbs (non-uniform rational b-spline surface). Where the PSI blank is an implicit model, the PSI model can be created using brep objects, with the formation and combination of some of the brep objects would be determined by the hidden attributes and/or the script in a manner similar to the mesh model described above. Alternatively, the PSI model could be produced subdividing and "warping" a surface to conform to a specific shape, or generating a surface procedurally from the implicit model. In another implementation, the PSI blank can be generated dynamically by selecting and extruding a portion of the surface. In such a case, there is no need to then subtract the surface from the blank, because after extrusion, the surface-facing region is the same as the surface itself. This "surface-matched" blank would still be augmented with the attributes in a manner similar to the mesh model.

FIG. **2** illustrates a method **50** for generating one or more patient specific instruments (PSIs) for use as surgical aids in the installation of a stock implant within a region of interest within a body of a patient. It will be appreciated that the illustrated method **50** can be implemented as machine executable instructions stored on one or more non-transitory computer readable media and executed by an associated processor. At **52**, the region of interest is scanned to provide a three-dimensional model of the region of interest. One or more appropriate imaging modalities can be used to provide the scan data, and the scan data can be utilized to create the three-dimensional model as a model of the region of interest. The region of interest can be any portion of the body in which an implant device can be installed. For example, the region of interest can represent a shoulder joint or a hip joint of the patient.

At **54**, a first user is allowed to position a model of a selected implant with the three-dimensional model of the region of interest. For example, the model of the selected implant can be displayed to the user via a graphical user interface, and the user can manipulate the position and orientation of the model using one or more input devices. In accordance with an aspect of the present invention, the

model of the selected implant can have a number of associated attributes, including extensions to the three-dimensional device model, additional models associated with the model, point locations, direction vectors, planes, labels, and categories. Some of these attributes can be hidden from the first user, such that the display of the implant model to the first user includes only a first proper subset of the attributes associated with the model.

Once the implant model has been placed, a second user can configure one or both of the implant model and one or more generic patient specific instrument (PSI) models at **56**. The display of the implant model to the second user can include a second proper subset of attributes, and the second user can be permitted to alter one or more of the displayed attributes. For example, the second user can configure one of the size and position of an extension of the model of the selected implant that was not visible to the first user. It will be appreciated that the attributes associated with a given implant model can include attributes visible to the first user but not visible to the second user, attributes visible to the second user, but not visible to the first user, attributes visible to both users, and attributes not visible to either user.

In one implementation, the second user can position and configure the one or more generic PSI models on the region of interest. As part of the configuration process, the second user can alter at least one of the size and the shape of each generic PSI model as well as the size and shape of any extensions from the model. In one implementation, the generic PSI model can include a cylindrical base portion and one or more extensions that can be rectangular or wedge-shaped. The second user can position the base portion, adjust its diameter and thickness, as well as determine an associated width, length, and shape of the extensions as part of the configuration process.

At **58**, patient specific instrument models are generated from corresponding generic PSI models. For example, the PSI models can be generated according to the position of the generic PSI models, the position and orientation of the model of the selected implant within the three-dimensional model of the region of interest, and the position of at least one extension of the model that is not visible to the first user. In one implementation, each of the three-dimensional model, the generic PSI models, and the implant model can be represented as mesh models, and the patient specific instrument models can be created via a series of geometry processing operations. For example, each model can be represented by an associated script implementing a Constructive Solid Geometry (CSG) technique. The script language is designed to be easy to parse, as to make the language comprehensible to users without significant programming experience. It will be appreciated, however, that the script language herein is provided merely for the sake of example, and that other means for implementing the systems and methods described herein, including script languages having different grammars, can be utilized. For example, in one implementation, an implant model or generic PSI model can be implicitly defined according to one or more generic models and a set of parameters defining a specific instance of the generic model. The script can include comments, indicated by a double slash (//) to document the script and make it easier to understand the intent of each command, as well as arguments, indicated by dollar signs ($) representing mesh objects called from other locations by the script. Depending on the script, the mesh comprising each object can be used in operations and/or overwritten. Variables are mesh objects created local to the scope of script execution. They hold temporary meshes created by and used in operations. Models describe the location, relative to the root of the component assembly tree, of a specific model attribute, which is a mesh object. Some nodes in the tree have exactly one active "branch" at a time. For these nodes, a "?" in the path indicates that the currently active branch should be used when evaluating the remainder of the path. Functions allow a more complex operation to be applied to a mesh object, such as an argument, variable or model. One example is a smoothing operation. An associated argument is passed to the function to control its behavior. Another example is a transform function that can be applied to all or a selected portion of the geometry of the PSI model to produce a desired deformation in the PSI model. Finally, union (+), difference (−), and intersection (&) operators are used to combine two mesh objects via a Boolean operation. Table 1 describes the grammar of the scripting language in more detail.

TABLE 1

```
program    :=> [command]*
command    :=> lhs '=' rhs ';'
rhs        :=> operation | function | operand
lhs        :=> variable | argument
operation  :=> operand operator operand
operator   :=> '+' | '&' | '−'
function   :=> func '(' operand ',' arg ')'
operand    :=> '[' model_ref ']' | variable | argument
func       :=> split WHERE arg IS (largest|smallest) | smooth
WHERE arg IS float | save WHERE arg IS filename
variable   :=> name
argument   :=> '$'name
name       :=> (alpha)[alphanum]*
label      :=> (alphanum | ' ')*
alpha      :=> '_' | 'a' | 'b' | ... | 'z' | 'A' | 'B' | ... | 'Z'
num        :=> '0' | '1' | ... | '9'
alphanum   :=> alpha | num
float      :=> [num]* '.' [num]*
model_ref  :=> model_path | '@'model_label
model_path :=> (alphanum | ' ')* ['/' ( '?' | (alphanum | ' ')* ) ]*
model_label :=> ""label""
filename   :=> "a valid system filename"
```

The final model for each patient specific instrument can be created by performing a series of geometry processing operations on the model of the selected implant, the at least one extension of the model, the three-dimensional model of the region of interest, and the generic PSI model as defined by a script associated with each implant model. In this way, the same generic PSI model can be used to create PSIs for multiple implant choices, with each implant defining how to make the final patient specific instrument model from the blank.

A number of features can be added to a given generic PSI model through these geometry processing operations. For example, one operation can comprise subtracting a portion of intersection between the three-dimensional model of the region of interest and the generic PSI model from the generic PSI model such that a first surface of the generic PSI model is contoured to a portion of a surface of the three-dimensional model of the region of interest. Similarly, a portion of intersection between an extension of the model and the generic PSI model from the generic PSI model can be subtracted from the generic PSI model as to form at least one guide structure in the generic PSI model. For example, the guide structure can represent an aperture or protrusion on the PSI model for maintaining one of an instrument and an implant in a desired orientation relative to the region of interest. Accordingly, each implant model can have its own built in guide extensions, for example, for its own placement or for guiding an associated instrument, hidden from the first

user during placement of the implant, that define the positions of the guide structure in the patient specific instrument according to the first user's placement of the implant model.

Another operation can include taking the union of an extension of the model and the generic PSI model as to add a cylindrical bushing represented by the first extension to the generic PSI model. For example, the implant model can include an associated guide pin, and the cylindrical bushing can represent a hidden attribute of the model at the guide pin, such that placement of the guide pin by the first user can define the position of the bushing. The bushing can provide guidance for a drilling operation for placing the guide pin, while also minimizing lateral movement of the drill. For patient specific instruments in which the bone contour is not available for a guide, such as those intended to rest on the surface of a given stock implant, the guide pin can have hidden attribute representing a notched guide bar for orienting the patient specific implement relative to the guide pin, and the series of mesh operations can include taking the union of the guide bar and the generic PSI model as to add the guide bar to the generic PSI model. Table 2 shows one example of a script for making two patient specific instrument models from two generic PSI models, $blank and $locator. It will be appreciated that these examples are given merely as illustrations, and that the hidden attributes and associated geometry processing operations associated with a given implant procedure will vary with the position within the body, the type of implant, and the requirements of a particular surgical procedure. It will be further appreciated that the script could contain further instructions to add details such as engraved or embossed text, or further refine or process the mesh object.

TABLE 2

```
// create glenoid PSI model
drill_holes = [GlenoidImplant/Center Hex/bore/bore shape] +
[GlenoidImplant/Auxiliary Pin Assembly/?/rotation/Auxiliary
Pin/bore shape];
hex_boss = [GlenoidImplant/Center Hex/hex model] +
[GlenoidImplant/Auxiliary Pin Assembly/?/rotation/Auxiliary
Hex/hex model];
$template = $blank + hex_boss;
$template = $template − drill_holes;
$template = $template − $surface;
$template = split( $template, largest );
// create implant PSI model (locating guide)
drill_holes = [GlenoidImplant/Anterior Screw/bore/bore shape] +
[GlenoidImplant/Inferior Screw/bore/bore shape];
drill_holes = drill_holes + [GlenoidImplant/Posterior
Screw/bore/bore shape];
drill_holes = drill_holes + [GlenoidImplant/Auxiliary
Screw/bore/bore shape];
drill_holes = drill_holes + [GlenoidImplant/Auxiliary Pin
Assembly/?/rotation/Auxiliary Pin/guide wire bore shape];
$locator = [GlenoidImplant/drill guide/implant_guide_blank] +
[GlenoidImplant/Arm/Arm model];
$locator = $locator − drill_holes;
```

At **60**, a patient specific instrument is fabricated according to each patient specific instrument model. The patient specific instrument may be made by any suitable method such as, but not limited to, selective laser sintering ("SLS"), fused deposition modeling ("FDM"), stereolithography ("SLA"), laminated object manufacturing ("LOM"), electron beam melting ("EBM"), three-dimensional printing ("3DP"), contour milling from a suitable material, computer numeric control ("CNC"), other rapid prototyping methods, or any other desired manufacturing process.

FIG. **3** illustrates a physical instantiation **70** of a glenoid template model created by the script of Table 2. The model includes a first drill guide **72** indicating a desired location for a center pin associated with an implant, and a second drill guide **74** indicating a desired location for an auxiliary pin associated with an implant. It will be appreciated that components commonly utilized in combination with a given implant can be included in the model of the implant to facilitate configuration of auxiliary components. One surface of the glenoid template **70** can be contoured to mate with a surface of a bone of a patient, allowing the drill guides **72** and **74** to be positioned correctly when the template is mounted to an appropriate location on the bone.

FIG. **4** illustrates a physical instantiation **80** of a metaglene guide model created by the script of Table 2. The illustrated metaglene guide **80** is configured to fit into an off-the-shelf implant to guide the placement of the implant. The guide **80** includes a plurality of holes **82-85** for dictating the position and trajectory of screws used to fasten the implant to the bone. Accordingly, when the guide **80** is positioned properly on its associated implant, any screws inserted through the holes **82-85** will be positioned as planned by a user, such as a surgeon, during generation of the guide model. Since the metaglene guide **80** does not directly mate with the bone surface, a guide bar **90** is included to allow for proper orientation of the device. A notch **92** in the guide bar is configured to engage with an auxiliary pin placed using the glenoid template of FIG. **3**, such that when the notch is engaged with the auxiliary pin, the orientation of the metaglene guide is correct.

FIGS. **5-22** collectively illustrate the operation of a system in accordance with an aspect of the present invention. The application described herein is directed toward planning the surgical implantation of a prosthetic implant into the glenoid vault of the scapula, but it will be appreciated that the system can be used to plan any of a number of procedures, including, but not limited to, implants for use in hip joints, shoulder joints, knee joints, ankle joints, phalangeal joints, metatarsal joints, spinal structures, long bones (e.g., fracture sites), or any other suitable environment. For example, the implanted prosthetic device could be an internal fixation device (e.g., a bone plate), a structure of a replacement/prosthetic joint, or any other suitable artificial device to replace or augment a missing or impaired part of the body.

To facilitate preoperative planning, a first user, such as a surgeon, can view the imaging data for a given patient, for example, as a three-dimensional model of a region of interest, and based upon knowledge of other patient characteristics (such as, but not limited to, height, weight, age, and activity level), choose a desired prosthetic device from a library of device models available for use in the surgical procedure. FIG. **5** illustrates one example of a prosthetic device **100**, with the illustrated device **100** being configured for implantation into a scapula. Upon selection of the desired prosthetic device, a device model can be retrieved to represent the selected device and displayed to the first user. FIG. **6** illustrates an example of a device model **102** for the prosthetic device illustrated in FIG. **5** as it might appear to a first user, such as a surgeon, using a system in accordance with an aspect of the present invention.

The surgeon can place the device model **102** into a position and orientation relative to a model of a region of interest within a patient to simulate a final placement of a corresponding stock implant device after the surgical procedure. An orientation of a structure, as used herein, includes both the absolute location of the structure upon or with respect to another structure and the arrangement or positioning in space of the structure (e.g., rotation, pitch, yaw,

camber, or any other placement-related variable of the structure). In practice, there may be some overlap or superposition between the device model **102** and the modeled tissue. This superposition is permissible in the virtual environment of the described system and may help to indicate areas of the patient's tissue which could be targeted for alteration during placement of the stock implant.

FIG. **7** illustrates the device model **102** of FIG. **6** with all of its associated attributes shown. For example, the device model **102** includes several cylinders **104** and **106** representing the position of drill holes within the bone of the patient that facilitate affixing the implant. The device model **102** is illustrated in FIG. **8** overlaid on a model of a region of interest in the patient, specifically, a portion of a patient's scapula. In FIG. **8**, the device model **102** is depicted as the model would appear to a surgeon, such that many of the attributes shown in FIG. **7** are hidden. During such a simulation, the surgeon can adjust or reorient the position of the device model **102** with respect to the modeled region of interest, even to the extent of simulating the dynamic interaction between the two, as may be helpful to refine the selection, placement, and orientation of the selected prosthetic device for a desired patient outcome. It will be appreciated that, in the illustrated implementation, the guide pin **110** is visible, and that the surgeon can also select the placement of the guide pin relative to the implant **102**.

In one implementation, the surgeon can also make changes to the model of the region of interest of the patient to facilitate placement of the implant. For example, native patient tissue could be drilled, planed, reamed or otherwise removed, or the native patient tissue could be built up using bone grafts or other substances.

FIG. **9** illustrates the device model **102** overlaid on the model of the patient's scapula as the model would appear to a second user, specifically a technician, such that the displayed attributes are different from those shown in FIG. **8**. In the illustrated implementation, the position and orientation of the device model **102** cannot be changed by the technician, but attributes hidden from the surgeon are displayed. For example, the device model **102** includes a first hex boss **112** attached to a center axis of the device model and a second hex boss **114** attached to the guide pin **110**. The technician can translate and resize each hex boss **112** and **114** along their respective axes.

Once the surgeon and technician are satisfied with the placement of the device model **102** and its associated attributes, models representing one or more patient specific instruments (PSIs) for performing the implantation of the prosthetic are generated. One step in the PSI generation process is illustrated in FIGS. **10** and **11**. In FIG. **10**, a relevant portion **120** of a region of interest, specifically on the patient's scapula, is highlighted. For example, the relevant portion can be selected by the system in response to the positioning of the implant or selected manually by one of the surgeon and the technician. FIG. **11** illustrates the surface model **122** extracted from the relevant portion of the region of interest. The surface model **122** can comprise a mesh model of the relevant portion of the region of interest that represents the surface features of the region.

In one implementation, the surface model **122** can be altered to remove features that could interfere with the generation of a PSI model that would engage with the surface of the region of interest. For example, the system can remove "underhanging features," which are protuberances on or near a surface of the surface model that is intended to be in contact with the patient specific instrument that lack local support. In other words, underhanging features form gaps in the surface model structure beneath the surface intended to be in contact with the patient specific instrument. Avoiding underhanging features is desirable, because they can cause unnecessary extensions of a patient specific instrument that would prevent it from attaching it to the bone surface. Underhanging features can be removed, for example, by propagating the mesh of the surface model **122** in the direction of the implant axis to remove the gap formed by the underhanging feature. Other modifications can include filling/fixing holes and defects in the model, smoothing the model surface, and adding or removing material to a region of the surface model **122**. In practice, any operation or filter that can alter the model, in whatever format the model is represented, can be used to create the surface model, and the specific method will vary with the implementation.

Once the surface model has been created, a generic PSI model can be selected and positioned relative to the surface model of the region of interest. For example, the generic PSI model can be selected and placed by the system in response to the selection and placement of the device model or selected and placed by a technician. FIG. **12** illustrates one example of a generic PSI model **124** in accordance with an aspect of the present invention. The illustrated generic PSI model **124** is a model comprising a cylinder **126** and two "wedge" shapes **128** and **129**. Each wedge **128** and **129** can be set to one of several predefined shapes, including a rectangular "bar" or a substantially triangular "pie" shape, or disabled such that it does not appear in the generic PSI model **124**.

The generic PSI model **124** can be configured by the system or a technician at the time of creation. FIG. **13** illustrates the generic PSI model **124** after it has been configured. During configuration, the width of the cylinder **126** and the length of the cylinder along major and minor axes can be selected to adequately cover a desired portion of the region of interest. Similarly, the wedges **128-129** can be changed in shape (e.g., rectangular, "pie shaped", etc.), opening angle, position on the cylinder, length, width, or any other appropriate parameter to better match the generic PSI model **124** to an associated region of interest and device model.

FIG. **14** illustrates the generic PSI model **124** of FIGS. **12** and **13** positioned within the region of interest. In the illustrated diagram, the generic PSI model is shown with the device model **102** of FIGS. **6** and **7**, with only the attributes visible to a technician shown, including a center hex boss **132** and a guide pin hex boss **134**. It will be appreciated, however, that the generic PSI model **124** has been configured such that the first wedge **128** is an elongated rectangular wedge extending to the guide pin boss **134**, and the second wedge **129** is configured as a short pie-shaped wedge extending from the cylinder **126**.

In general, the technician will position and configure the generic PSI model **124** to satisfy two criteria. To begin with, the generic PSI model **124** must serve as a bridge to connect the various components of an implant, including ancillary components associated with the implant. In the illustrated example, the generic PSI model **124**, particularly the first wedge **128**, is configured to join the center hex boss **132** and the guide pin hex boss **134**. In addition, the generic PSI model **124** is configured to cover the relevant portion of the region of interest such that, after the modeling process is completed, the generic PSI model **124** will have a substantially unique complimentary surface to engage with a surface of the region of interest.

Once the generic PSI model **124** has been configured, one or more patient specific instrument models can be designed from the generic PSI model, and fabricated to serve as guides to the surgical procedure. The patient-specific instrument may be, for example, the type disclosed in co-pending U.S. patent application Ser. No. 13/282,509, filed Oct. 27, 2011 and titled "System and Method for Association of a Guiding Aid with a Patient Tissue", the entire contents of which are incorporated herein by reference.

FIGS. **15-22** illustrate the creation of a patient specific instrument model from a generic PSI model according to a script associated with a stock implant model such as that illustrated in FIGS. **6** and **7**. One example of a script is provided herein as Table 3.

TABLE 3

```
// create glenoid PSI model
drill_holes = [GlenoidImplant/Center Hex/bore/bore shape] +
[GlenoidImplant/Auxiliary Pin Assembly/?/rotation/Auxiliary
Pin/bore shape];
hex_boss = [GlenoidImplant/Center Hex/hex model] +
[GlenoidImplant/Auxiliary Pin Assembly/?/rotation/Auxiliary
Hex/hex model];
$template = $blank + hex_boss;
$template = $template − drill_holes;
$template = $template − $surface;
$template = split( $template, largest );
```

FIG. **15** illustrates the generic PSI model **124** positioned within the three-dimensional model of the region of interest. At this point, each of the implant model and the generic PSI model have been positioned and configured by the first and second users, and the script of Table 3 can be applied to form the final patient specific instrument model. Along with the generic PSI model itself, designated in the script as $blank, the script uses attributes of the implant model hidden from the surgeon, specifically the drill_holes object and the hex_nuts object. FIG. **16** illustrates the generic PSI model **124**, prior to the execution of the script, as a mesh model.

FIGS. **17** and **18** illustrate the generic PSI model **124** of FIGS. **15** and **16** after execution of a union between the generic PSI model and the hex_nuts object. The union with the hex_nuts object adds a first hexagonal nut **142** associated with a center pin and a second hexagonal nut **144** associated with an auxiliary pin to the generic PSI model **124**. FIGS. **19** and **20** illustrate the generic PSI model **124** of FIGS. **17** and **18** after subtraction of a drill_holes object from the generic PSI model. The subtraction provides a first drill guide **146** to facilitate placement of the center pin and a second drill guide **148** to facilitate placement of the auxiliary pin.

FIGS. **21** and **22** illustrate the generic PSI model **124** of FIGS. **19** and **20** after subtraction of a bone surface from the generic PSI model to create a final patient specific instrument model. The subtraction produces a contoured surface that will conform with the surface of the bone within the patient. It will be appreciated that this contoured surface can be used to guide the placement of a patient specific instrument made from the illustrated model, which, in turn, can guide the placement of the center pin and guide pin of a stock implant. Accordingly, the insertion of the stock implant can be performed with enhanced accuracy. A final instruction in the script executes a function that takes the template and keeps only the largest connected object. This eliminates any disjoint surfaces created via subtractions. The function cleans up the model by only keeping a largest portion (e.g., the portion with the most triangles).

FIG. **23** illustrates a computer system **200** that can be employed to implement systems and methods described herein, such as based on computer executable instructions running on the computer system. The user may be permitted to preoperatively simulate the planned surgical procedure using the computer system **200** as desired. The computer system **200** can be implemented on one or more general purpose networked computer systems, embedded computer systems, routers, switches, server devices, client devices, various intermediate devices/nodes and/or stand alone computer systems. Additionally, the computer system **200** can be implemented as part of the computer-aided engineering (CAE) tool running computer executable instructions to perform a method as described herein.

The computer system **200** includes a processor **202** and a system memory **204**. Dual microprocessors and other multiprocessor architectures can also be utilized as the processor **202**. The processor **202** and system memory **204** can be coupled by any of several types of bus structures, including a memory bus or memory controller, a peripheral bus, and a local bus using any of a variety of bus architectures. The system memory **204** includes read only memory (ROM) **206** and random access memory (RAM) **208**. A basic input/output system (BIOS) can reside in the ROM **206**, generally containing the basic routines that help to transfer information between elements within the computer system **200**, such as a reset or power-up.

The computer system **200** can include one or more types of long-term data storage **210**, including a hard disk drive, a magnetic disk drive, (e.g., to read from or write to a removable disk), and an optical disk drive, (e.g., for reading a CD-ROM or DVD disk or to read from or write to other optical media). The long-term data storage **210** can be connected to the processor **202** by a drive interface **212**. The long-term data storage **210** components provide nonvolatile storage of data, data structures, and computer-executable instructions for the computer system **200**. A number of program modules may also be stored in one or more of the drives as well as in the RAM **208**, including an operating system, one or more application programs, other program modules, and program data.

A user may enter commands and information into the computer system **200** through one or more input devices **222**, such as a keyboard or a pointing device (e.g., a mouse). These and other input devices are often connected to the processor **202** through a device interface **224**. For example, the input devices can be connected to the system bus by one or more a parallel port, a serial port or a universal serial bus (USB). One or more output device(s) **226**, such as a visual display device or printer, can also be connected to the processor **202** via the device interface **224**.

The computer system **200** may operate in a networked environment using logical connections (e.g., a local area network (LAN) or wide area network (WAN) to one or more remote computers **230**. A given remote computer **230** may be a workstation, a computer system, a router, a peer device or other common network node, and typically includes many or all of the elements described relative to the computer system **200**. The computer system **200** can communicate with the remote computers **230** via a network interface **232**, such as a wired or wireless network interface card or modem. In a networked environment, application programs and program data depicted relative to the computer system **200**, or portions thereof, may be stored in memory associated with the remote computers **230**.

While aspects of the present invention have been particularly shown and described with reference to the preferred embodiment above, it will be understood by those of ordinary skill in the art that various additional embodiments may

be contemplated without departing from the spirit and scope of the present invention. For example, the specific methods described above for using the described system are merely illustrative. Any of the described structures and components could be integrally formed as a single piece or made up of separate sub-components, with either of these formations involving any suitable stock or bespoke components and/or any suitable material or combinations of materials; however, the chosen material(s) should be biocompatible for most applications of the present invention. The mating relationships formed between the described structures need not keep the entirety of each of the "mating" surfaces in direct contact with each other but could include spacers or holdaways for partial direct contact, a liner or other intermediate member for indirect contact, or could even be approximated with intervening space remaining therebetween and no contact. Though certain components described herein are shown as having specific geometric shapes, all structures of the present invention may have any suitable shapes, sizes, configurations, relative relationships, cross-sectional areas, or any other physical characteristics as desirable for a particular application of the present invention. A given patient-specific instrument may include a plurality of structures cooperatively forming the base body and temporarily or permanently attached together in such a manner as to permit relative motion (e.g., pivoting, sliding, or any other motion) therebetween. Any structures or features described with reference to one embodiment or configuration of the present invention could be provided, singly or in combination with other structures or features, to any other embodiment or configuration, as it would be impractical to describe each of the embodiments and configurations discussed herein as having all of the options discussed with respect to all of the other embodiments and configurations. Any of the components described herein could have a surface treatment (e.g., texturization, notching, etc.), material choice, and/or other characteristic chosen to provide the component with a desired interaction property (e.g., tissue ingrowth, eluting of a therapeutic material, etc.) with the surrounding tissue. The system is described herein as being used to plan and/or simulate a surgical procedure of implanting one or more prosthetic structures into a patient's body, but also or instead could be used to plan and/or simulate any surgical procedure, regardless of whether a non-native component is left in the patient's body after the procedure. A device or method incorporating any of these features should be understood to fall under the scope of the present invention as determined based upon the claims below and any equivalents thereof.

Other aspects, objects, and advantages of the present invention can be obtained from a study of the drawings, the disclosure, and the appended claims.

I claim:

1. A combination of a non-transitory computer readable medium storing machine readable instructions for fabricating a patient specific instrument (PSI) for use as a surgical guide for a surgical implant and of a model of the PSI in a digital format for use in fabricating the PSI, and the PSI, the combination comprising:

the machine readable instructions comprising:

a region modeling component configured to provide a three-dimensional model of a region of interest within a body from at least one imaging scan of the region of interest,

a surgical planning component configured to display a visible portion of a model of the implant and the three-dimensional model of the region of interest to a first user and allow the first user to select a preoperative surgical plan including a position of the implant within the three-dimensional model of the region of interest in a desired orientation, the implant having at least one hidden attribute that is not visible to the first user, the at least one hidden attribute of the implant being an implant extension configured to extend into a bone in the region of interest for maintaining the implant in the desired orientation relative to the region of interest, and

a PSI design component configured to prohibit alterations to the preoperative surgical plan selected by the first user, the PSI design component configured to display the at least one hidden attribute that is not visible to the first user, to generate at least one guide structure as extending from the implant extension and out of bone in the region of interest when the implant is in the desired orientation, the PSI design component configured to generate a model of the PSI incorporating at least one guide hole, the PSI design component configured to generate the at least one guide hole by subtracting the at least one guide structure from a generic PSI model, the PSI design component configured to display the at least one guide structure relative to the region of interest while excluding the visible portion of the implant;

the model of the PSI in a digital format for use in fabricating the PSI; and

the PSI fabricated from the model of the PSI in the digital format to implement the preoperative surgical plan, the PSI fabricated using data related to the model of the PSI in the digital format to control a manufacturing apparatus.

2. The combination of claim **1**, each of the implant, the model of the region of interest, and the generic PSI model comprising a model, and the PSI design component being configured to provide the patient specific instrument model as a series of geometry processing operations on the implant, the model of the region of interest, and the generic PSI model.

3. The combination of claim **1**, each of the implant and the generic PSI model comprising a model and the at least one hidden attribute comprising an extension on the implant, the PSI design component being configured to provide the patient specific instrument model as a series of geometry processing operations on the at least one hidden attribute and the generic PSI model.

4. The combination of claim **1**, wherein the PSI design component prohibits displacement of the guide structure extending from the implant extension.

5. The combination of claim **1**, the PSI design component further configured to select a portion of a surface within the region of interest and extrude the surface in a determined direction to provide the generic PSI model.

6. The combination of claim **1**, wherein the region of interest is a shoulder joint and the region modeling component is configured to provide a three-dimensional model of at least one bone within the shoulder joint.

7. The combination of claim **1**, wherein the region modeling component is configured to modify the three-dimensional model of the region of interest to eliminate any underhanging features on a portion of the three-dimensional model of the region of interest representing a bone.

8. The combination of claim **1**, wherein the at least one hidden attribute comprises a first attribute that is visible to a second user.

9. The combination of claim **8**, wherein the at least one hidden attribute comprises a second attribute that is not visible to either of the first user and the second user.

10. A computer-implemented method for fabricating a patient specific instrument (PSI) for use as a surgical guide for a surgical implant, comprising:

scanning a region of interest within a body of a patient to provide a three-dimensional model of the region of interest;

allowing a first user to select a preoperative surgical plan by positioning a model of the implant to a desired orientation with respect to the three-dimensional model of the region of interest via a graphical user interface by displaying a visible portion of the implant relative to the three-dimensional model of the region of interest, the implant having at least one hidden attribute that is not visible to the first user, the at least one hidden attribute of the implant being an implant extension configured to extend into a bone in the region of interest configured for maintaining the implant in the desired orientation relative to the region of interest;

prohibiting alterations by a second user to the preoperative surgical plan selected by the first user,

displaying to the second user the at least one hidden attribute that is not visible to the first user, a model of the PSI relative to the region of interest while excluding the visible portion of the implant, for the second user to alter parameters of the model of the PSI;

generating the model of the PSI incorporating at least one guide hole, the at least one guide hole resulting from a subtraction of a guide structure from a generic PSI model, the guide structure configured to extend from the implant extension and out of bone in the region of interest when the implant is in the desired orientation; and

fabricating the PSI according to the model of the PSI configured for implementing the preoperative surgical plan, fabricating the PSI comprises using data related to the model of the PSI in the digital format to control a manufacturing apparatus.

11. The method of claim 10, wherein generating a model of the PSI from a generic PSI model comprises performing a series of geometry processing operations on the implant, an at least one extension of the implant, the three-dimensional model of the region of interest, and the generic PSI model.

12. The method of claim 11, wherein performing the series of geometry processing operations comprises subtracting a portion of intersection between the three-dimensional model of the region of interest and the generic PSI model from the generic PSI model such that a first surface of the generic PSI model is contoured to a portion of a surface of the three-dimensional model of the region of interest.

13. The method of claim 11, further comprising prohibiting displacement of the guide structure extending from the implant extension after allowing the first user to position the model of the implant.

14. The method of claim 11, wherein performing the series of geometry processing operations comprises taking the union of an extension of the at least one extension and the generic PSI model as to add the at least one guide structure to the generic PSI model.

15. The method of claim 11, applying a parameterized transform operation to at least a portion of the generic PSI model to produce a desired deformation in the generic PSI model.

16. The method of claim 10, further comprising generating one of the model of a selected implant and the generic PSI model as a specific instance, represented by an appropriate set of parameters, of an implicitly defined model.

17. The method of claim 10, further comprising modifying the three-dimensional model of the region of interest to eliminate features on a portion of the three-dimensional model of the region of interest expected to interfere with the engagement of the model with the region of interest.

18. The method of claim 10, further comprising allowing a second user to configure the generic PSI model to alter at least one of the size and the shape of the generic PSI model.

19. The method of claim 10, further comprising allowing a second user to configure the model of the selected implant to alter one of the size and position of a first extension of the implant.

20. The method of claim 10, wherein generating a patient specific instrument model from a generic PSI model comprises executing a script in an associated script language.

21. A system for fabricating a patient specific instrument (PSI) for use as a surgical guide for a surgical implant, the system comprising a non-transitory computer readable medium storing machine readable instructions for performing a method comprising the steps of:

allowing a first user to select a preoperative surgical plan by positioning a model of the implant in a desired orientation relative to a three-dimensional model of a region of interest by displaying a visible portion of the implant relative to the three-dimensional model of the region of interest, the implant having at least one hidden attribute that is not visible to the first user, the at least one hidden attribute of the implant being an implant extension configured to extend into a bone in the region of interest for maintaining the implant in the desired orientation relative to the region of interest;

allowing a second user to alter a first attribute of the implant by displaying the at least one hidden attribute that is not visible to the first user, and at least one guide structure relative to the region of interest to the second user, while excluding the visible portion of the implant from being viewed by the second user, the at least one guide structure extending from the implant extension and out of bone in the region of interest when the implant is in the desired orientation;

concurrently prohibiting alterations by the second user to the preoperative surgical plan selected by the first user,

generating a model of the PSI from a generic PSI model according to the preoperative surgical plan of the implant by the first user, the alteration of the first attribute by the second user, the model of the PSI incorporating at least one guide hole, the at least one guide hole resulting from a subtraction of the guide structure extending from the implant extension from the generic PSI model;

outputting the model of the PSI in a digital format for use in fabricating the PSI;

fabricating the PSI using data related to the model of the PSI in the digital format to control a manufacturing apparatus; and

a processor configured to execute the machine readable instructions.

22. The non-transitory computer readable medium of claim 1, wherein the at least one hidden attribute of the model of the implant is not present in the surgical implant.

23. The system of claim 21, further comprising prohibiting displacement of the guide structure extending from the implant extension in the desired orientation of the model of the implant after allowing the first user to position the model of the implant in the desired orientation.

24. The non-transitory computer readable medium of claim **1**, wherein the PSI is fabricated using at least one of selective laser sintering, fused deposition modeling, stereolithography, laminated object manufacturing, electron beam melting, three-dimensional printing, contour milling and computer numeric control.

* * * * *