US010271851B2

(12) **United States Patent**
Shelton, IV et al.

(10) **Patent No.: US 10,271,851 B2**
(45) **Date of Patent: Apr. 30, 2019**

(54) **MODULAR SURGICAL STAPLING SYSTEM COMPRISING A DISPLAY**

(71) Applicant: **Ethicon Endo-Surgery, LLC**, Guaynabo, PR (US)

(72) Inventors: **Frederick E. Shelton, IV**, Hillsboro, OH (US); **Jason L. Harris**, Lebanon, OH (US); **Adam D. Hensel**, Cincinnati, OH (US)

(73) Assignee: **Ethicon LLC**, Guaynabo, PR (US)

(*) Notice: Subject to any disclaimer, the term of this patent is extended or adjusted under 35 U.S.C. 154(b) by 482 days.

(21) Appl. No.: **15/089,321**

(22) Filed: **Apr. 1, 2016**

(65) **Prior Publication Data**

US 2017/0281163 A1 Oct. 5, 2017

(51) **Int. Cl.**
A61B 17/072 (2006.01)
A61B 17/115 (2006.01)
(Continued)

(52) **U.S. Cl.**
CPC ***A61B 17/1155*** (2013.01); ***A61B 17/00234*** (2013.01); ***A61B 17/068*** (2013.01); ***A61B 17/0644*** (2013.01); ***A61B 17/0686*** (2013.01); ***A61B 17/072*** (2013.01); ***A61B 17/07207*** (2013.01); ***A61B 17/07292*** (2013.01);
(Continued)

(58) **Field of Classification Search**
CPC A61B 17/00234; A61B 17/0644; A61B 17/068; A61B 17/072; A61B 17/07207; A61B 17/115; A61B 17/1155; A61B 17/07292; A61B 2017/00017; A61B 2017/00398; A61B 2017/07214; A61B 2017/07235; A61B 2017/07278;
(Continued)

(56) **References Cited**

U.S. PATENT DOCUMENTS

2,224,882 A 12/1940 Peck
2,742,955 A 4/1956 Dominguez
(Continued)

FOREIGN PATENT DOCUMENTS

AU 2008207624 A1 3/2009
AU 2010214687 A1 9/2010
(Continued)

OTHER PUBLICATIONS

Disclosed Anonymously, "Motor-Driven Surgical Stapler Improvements," Research Disclosure Database No. 526041, Published: Feb. 2008.

(Continued)

Primary Examiner — Scott A Smith

(57) **ABSTRACT**

A surgical stapling system kit is disclosed which comprises a first module comprising, one, a first display system configured to display a first set of data regarding the operation of the first module and, two, a first attachment portion. The kit further comprises, one, a second module comprising a second display system configured to display a second set of data regarding the operation of the second module and, two, a second attachment portion attachable to the first module. The kit further comprises a third module comprising, one, a third display system configured to display a third set of data regarding the operation of the third module and, two, a third attachment portion attachable to the third module to the first module.

20 Claims, 64 Drawing Sheets

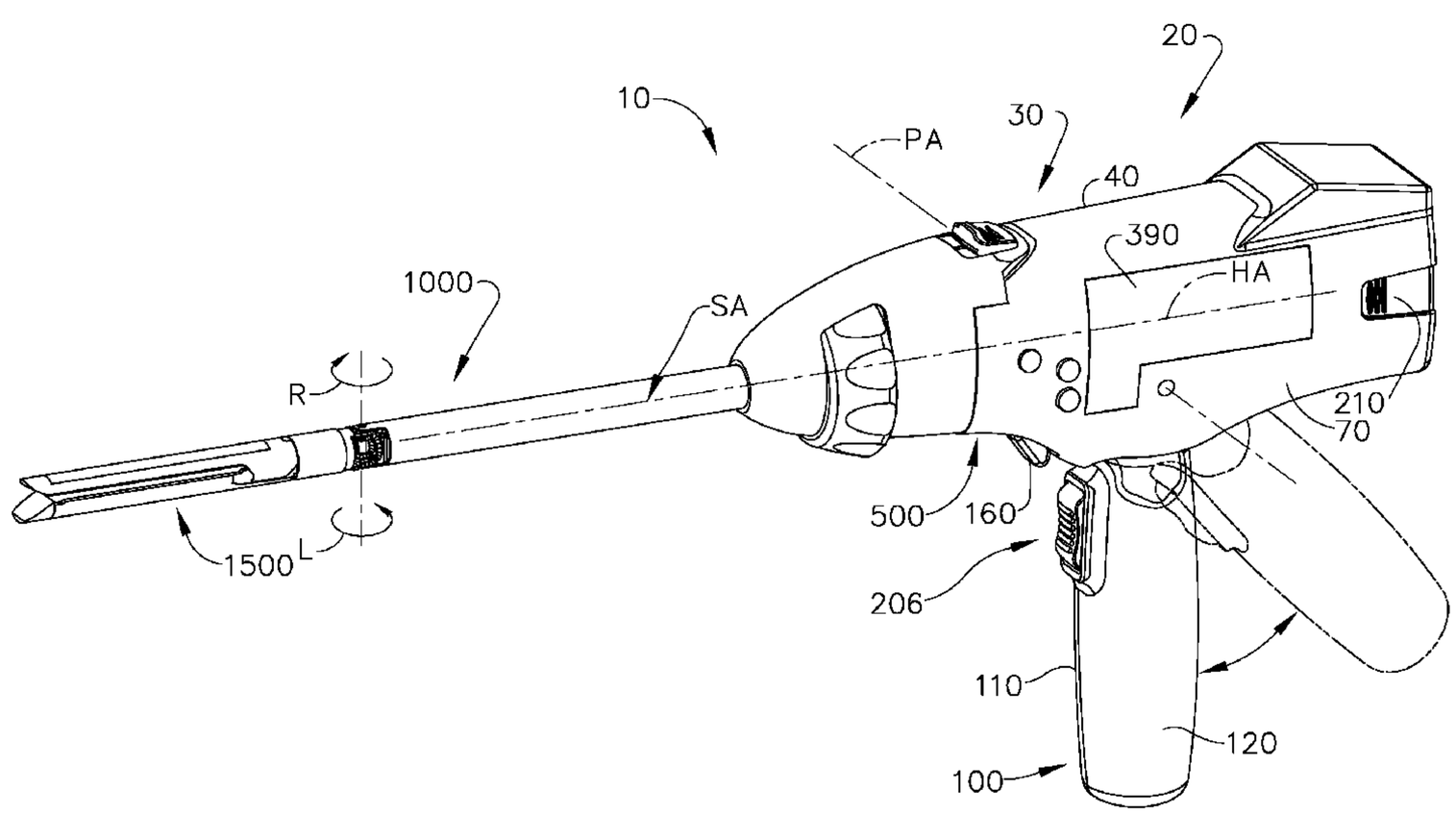

(51) **Int. Cl.**

A61B 17/00	(2006.01)
A61B 17/064	(2006.01)
A61B 17/068	(2006.01)
A61B 17/10	(2006.01)
A61B 17/32	(2006.01)
A61B 90/00	(2016.01)
A61B 17/29	(2006.01)

(52) **U.S. Cl.**
CPC ***A61B 17/105*** (2013.01); ***A61B 17/115*** (2013.01); ***A61B 17/32*** (2013.01); *A61B 17/320092* (2013.01); *A61B 90/37* (2016.02); *A61B 2017/00017* (2013.01); *A61B 2017/00115* (2013.01); *A61B 2017/00305* (2013.01); *A61B 2017/00367* (2013.01); *A61B 2017/00398* (2013.01); *A61B 2017/00407* (2013.01); *A61B 2017/00424* (2013.01); *A61B 2017/00464* (2013.01); *A61B 2017/00473* (2013.01); *A61B 2017/00477* (2013.01); *A61B 2017/00734* (2013.01); *A61B 2017/00946* (2013.01); *A61B 2017/07214* (2013.01); *A61B 2017/07228* (2013.01); *A61B 2017/07235* (2013.01); *A61B 2017/07242* (2013.01); *A61B 2017/07257* (2013.01); *A61B 2017/07264* (2013.01); *A61B 2017/07271* (2013.01); *A61B 2017/07278* (2013.01); *A61B 2017/07285* (2013.01); *A61B 2017/291* (2013.01); *A61B 2017/2903* (2013.01); *A61B 2017/2905* (2013.01); *A61B 2017/2923* (2013.01); *A61B 2017/2927* (2013.01); *A61B 2090/0808* (2016.02); *A61B 2090/0811* (2016.02); *A61B 2090/0814* (2016.02); *A61B 2090/08021* (2016.02)

(58) **Field of Classification Search**
CPC .. A61B 17/320092; A61B 2017/00734; A61B 2017/00367; A61B 90/37
USPC 227/19, 175.1, 176.1, 175.2, 180.1; 606/139, 153, 219
See application file for complete search history.

(56) **References Cited**

U.S. PATENT DOCUMENTS

2,853,074 A 9/1958 Olson
3,080,564 A 3/1963 Strekopitov et al.
3,166,072 A 1/1965 Sullivan, Jr.
3,266,494 A 8/1966 Brownrigg et al.
3,359,978 A 12/1967 Smith, Jr.
3,490,675 A 1/1970 Green et al.
3,494,533 A 2/1970 Green et al.
3,551,987 A 1/1971 Wilkinson
3,643,851 A 2/1972 Green et al.
3,662,939 A 5/1972 Bryan
3,717,294 A 2/1973 Green
3,744,495 A 7/1973 Johnson
3,746,002 A 7/1973 Haller
3,819,100 A 6/1974 Noiles et al.
3,863,639 A 2/1975 Kleaveland
RE28,932 E 8/1976 Noiles et al.
4,111,206 A 9/1978 Vishnevsky et al.
4,190,042 A 2/1980 Sinnreich
4,198,982 A 4/1980 Fortner et al.
4,207,898 A 6/1980 Becht
4,272,002 A 6/1981 Moshofsky
4,274,398 A 6/1981 Scott, Jr.
4,304,236 A 12/1981 Conta et al.
4,331,277 A 5/1982 Green
4,383,634 A 5/1983 Green
4,396,139 A 8/1983 Hall et al.
4,402,445 A 9/1983 Green
4,408,692 A 10/1983 Sigel et al.
4,415,112 A 11/1983 Green
4,417,890 A 11/1983 Dennehey et al.
4,429,695 A 2/1984 Green
4,473,077 A 9/1984 Noiles et al.
4,475,679 A 10/1984 Fleury, Jr.
4,489,875 A 12/1984 Crawford et al.
4,500,024 A 2/1985 DiGiovanni et al.
4,505,272 A 3/1985 Utyamyshev et al.
4,505,273 A 3/1985 Braun et al.
4,505,414 A 3/1985 Filipi
4,506,671 A 3/1985 Green
4,522,327 A 6/1985 Korthoff et al.
4,527,724 A 7/1985 Chow et al.
4,530,453 A 7/1985 Green
4,566,620 A 1/1986 Green et al.
4,573,468 A 3/1986 Conta et al.
4,573,622 A 3/1986 Green et al.
4,580,712 A 4/1986 Green
4,585,153 A 4/1986 Failla et al.
4,605,004 A 8/1986 Di Giovanni et al.
4,610,383 A 9/1986 Rothfuss et al.
4,619,262 A 10/1986 Taylor
4,619,391 A 10/1986 Sharkany et al.
4,629,107 A 12/1986 Fedotov et al.
4,632,290 A 12/1986 Green et al.
4,654,028 A 3/1987 Suma
4,655,222 A 4/1987 Florez et al.
4,662,555 A 5/1987 Thornton
4,664,305 A 5/1987 Blake, III et al.
4,669,647 A 6/1987 Storace
4,671,445 A 6/1987 Barker et al.
4,684,051 A 8/1987 Akopov et al.
4,700,703 A 10/1987 Resnick et al.
4,715,520 A 12/1987 Roehr, Jr. et al.
4,728,020 A 3/1988 Green et al.
4,744,363 A 5/1988 Hasson
4,752,024 A 6/1988 Green et al.
4,754,909 A 7/1988 Barker et al.
4,767,044 A 8/1988 Green
4,773,420 A 9/1988 Green
4,805,823 A 2/1989 Rothfuss
4,809,695 A 3/1989 Gwathmey et al.
4,817,847 A 4/1989 Redtenbacher et al.
4,819,853 A 4/1989 Green
4,821,939 A 4/1989 Green
4,844,068 A 7/1989 Arata et al.
4,848,637 A 7/1989 Pruitt
4,869,414 A 9/1989 Green et al.
4,869,415 A 9/1989 Fox
4,873,977 A 10/1989 Avant et al.
4,893,622 A 1/1990 Green et al.
4,903,697 A 2/1990 Resnick et al.
4,909,789 A 3/1990 Taguchi et al.
4,921,479 A 5/1990 Grayzel
4,930,674 A 6/1990 Barak
4,941,623 A 7/1990 Pruitt
4,944,443 A 7/1990 Oddsen et al.
4,973,302 A 11/1990 Armour et al.
4,984,564 A 1/1991 Yuen
5,002,553 A 3/1991 Shiber
5,014,899 A 5/1991 Presty et al.
5,027,834 A 7/1991 Pruitt
5,065,929 A 11/1991 Schulze et al.
5,071,430 A 12/1991 de Salis et al.
5,074,454 A 12/1991 Peters
5,080,088 A 1/1992 LeVahn
5,082,005 A 1/1992 Kaldany
5,084,057 A 1/1992 Green et al.
5,104,025 A 4/1992 Main et al.
5,104,397 A 4/1992 Vasconcelos et al.
5,108,368 A 4/1992 Hammerslag et al.
5,116,349 A 5/1992 Aranyi
5,119,983 A 6/1992 Green et al.
5,122,156 A 6/1992 Granger et al.
5,129,570 A 7/1992 Schulze et al.
5,137,198 A 8/1992 Nobis et al.
5,139,513 A 8/1992 Segato

(56) **References Cited**

U.S. PATENT DOCUMENTS

5,141,144 A 8/1992 Foslien et al.
5,156,609 A 10/1992 Nakao et al.
5,158,567 A 10/1992 Green
5,171,247 A 12/1992 Hughett et al.
5,171,249 A 12/1992 Stefanchik et al.
5,195,505 A 3/1993 Josefsen
5,197,649 A 3/1993 Bessler et al.
5,205,459 A 4/1993 Brinkerhoff et al.
5,211,649 A 5/1993 Kohler et al.
5,211,655 A 5/1993 Hasson
5,221,036 A 6/1993 Takase
5,222,945 A 6/1993 Basnight
5,222,963 A 6/1993 Brinkerhoff et al.
5,222,975 A 6/1993 Crainich
5,234,447 A 8/1993 Kaster et al.
5,236,440 A 8/1993 Hlavacek
5,239,981 A 8/1993 Anapliotis
5,258,009 A 11/1993 Conners
5,263,937 A 11/1993 Shipp
5,271,543 A 12/1993 Grant et al.
5,275,322 A 1/1994 Brinkerhoff et al.
5,282,806 A 2/1994 Haber et al.
5,282,829 A 2/1994 Hermes
5,285,945 A 2/1994 Brinkerhoff et al.
5,304,204 A 4/1994 Bregen
5,309,896 A 5/1994 Moll et al.
5,309,927 A 5/1994 Welch
5,312,023 A 5/1994 Green et al.
5,314,445 A 5/1994 Heidmueller et al.
5,330,502 A 7/1994 Hassler et al.
5,333,772 A 8/1994 Rothfuss et al.
5,336,232 A 8/1994 Green et al.
5,342,385 A 8/1994 Norelli et al.
5,342,395 A 8/1994 Jarrett et al.
5,342,396 A 8/1994 Cook
5,346,115 A 9/1994 Perouse et al.
5,350,104 A 9/1994 Main et al.
5,350,400 A 9/1994 Esposito et al.
5,354,250 A 10/1994 Christensen
5,354,303 A 10/1994 Spaeth et al.
5,358,506 A 10/1994 Green et al.
5,366,479 A 11/1994 McGarry et al.
5,374,277 A 12/1994 Hassler
5,375,588 A 12/1994 Yoon
5,383,880 A 1/1995 Hooven
5,383,888 A 1/1995 Zvenyatsky et al.
5,383,895 A 1/1995 Holmes et al.
5,391,180 A 2/1995 Tovey et al.
5,395,030 A 3/1995 Kuramoto et al.
5,395,033 A 3/1995 Byrne et al.
5,395,384 A 3/1995 Duthoit et al.
5,397,324 A 3/1995 Carroll et al.
5,403,312 A 4/1995 Yates et al.
5,404,870 A 4/1995 Brinkerhoff et al.
5,405,072 A 4/1995 Zlock et al.
5,405,073 A 4/1995 Porter
5,405,344 A 4/1995 Williamson et al.
5,405,360 A 4/1995 Tovey
5,411,508 A 5/1995 Bessler et al.
5,413,272 A 5/1995 Green et al.
5,413,573 A 5/1995 Koivukangas
5,415,334 A 5/1995 Williamson et al.
5,417,361 A 5/1995 Williamson, IV
5,419,766 A 5/1995 Chang et al.
5,425,745 A 6/1995 Green et al.
5,433,721 A 7/1995 Hooven et al.
5,441,494 A 8/1995 Ortiz
5,445,644 A 8/1995 Pietrafitta et al.
5,449,365 A 9/1995 Green et al.
5,452,837 A 9/1995 Williamson, IV et al.
5,465,894 A 11/1995 Clark et al.
5,474,057 A 12/1995 Makower et al.
5,474,566 A 12/1995 Alesi et al.
5,476,479 A 12/1995 Green et al.
5,478,354 A 12/1995 Tovey et al.
5,480,089 A 1/1996 Blewett
5,480,409 A 1/1996 Riza
5,482,197 A 1/1996 Green et al.
5,483,952 A 1/1996 Aranyi
5,484,095 A 1/1996 Green et al.
5,484,451 A 1/1996 Akopov et al.
5,485,947 A 1/1996 Olson et al.
5,485,952 A 1/1996 Fontayne
5,487,499 A 1/1996 Sorrentino et al.
5,487,500 A 1/1996 Knodel et al.
5,489,058 A 2/1996 Plyley et al.
5,490,819 A 2/1996 Nicholas et al.
5,497,933 A 3/1996 DeFonzo et al.
5,503,320 A 4/1996 Webster et al.
5,503,635 A 4/1996 Sauer et al.
5,505,363 A 4/1996 Green et al.
5,507,426 A 4/1996 Young et al.
5,509,596 A 4/1996 Green et al.
5,511,564 A 4/1996 Wilk
5,514,157 A 5/1996 Nicholas et al.
5,518,163 A 5/1996 Hooven
5,518,164 A 5/1996 Hooven
5,520,609 A 5/1996 Moll et al.
5,520,678 A 5/1996 Heckele et al.
5,520,700 A 5/1996 Beyar et al.
5,527,264 A 6/1996 Moll et al.
5,529,235 A 6/1996 Boiarski et al.
5,531,856 A 7/1996 Moll et al.
5,533,661 A 7/1996 Main et al.
5,535,934 A 7/1996 Boiarski et al.
5,535,935 A 7/1996 Vidal et al.
5,535,937 A 7/1996 Boiarski et al.
5,540,375 A 7/1996 Bolanos et al.
5,542,594 A 8/1996 McKean et al.
5,547,117 A 8/1996 Hamblin et al.
5,549,621 A 8/1996 Bessler et al.
5,549,637 A 8/1996 Crainich
5,551,622 A 9/1996 Yoon
5,553,765 A 9/1996 Knodel et al.
5,554,169 A 9/1996 Green et al.
5,556,416 A 9/1996 Clark et al.
5,558,665 A 9/1996 Kieturakis
5,560,530 A 10/1996 Bolanos et al.
5,560,532 A 10/1996 DeFonzo et al.
5,562,239 A 10/1996 Boiarski et al.
5,562,241 A 10/1996 Knodel et al.
5,562,682 A 10/1996 Oberlin et al.
5,562,690 A 10/1996 Green et al.
5,562,701 A 10/1996 Huitema et al.
5,562,702 A 10/1996 Huitema et al.
5,564,615 A 10/1996 Bishop et al.
5,571,116 A 11/1996 Bolanos et al.
5,571,285 A 11/1996 Chow et al.
5,575,799 A 11/1996 Bolanos et al.
5,575,803 A 11/1996 Cooper et al.
5,575,805 A 11/1996 Li
5,577,654 A 11/1996 Bishop
5,579,978 A 12/1996 Green et al.
5,580,067 A 12/1996 Hamblin et al.
5,584,425 A 12/1996 Savage et al.
5,586,711 A 12/1996 Plyley et al.
5,588,579 A 12/1996 Schnut et al.
5,588,580 A 12/1996 Paul et al.
5,588,581 A 12/1996 Conlon et al.
5,597,107 A 1/1997 Knodel et al.
5,601,224 A 2/1997 Bishop et al.
5,603,443 A 2/1997 Clark et al.
5,605,272 A 2/1997 Witt et al.
5,605,273 A 2/1997 Hamblin et al.
5,607,094 A 3/1997 Clark et al.
5,607,095 A 3/1997 Smith et al.
5,607,450 A 3/1997 Zvenyatsky et al.
5,609,285 A 3/1997 Grant et al.
5,613,937 A 3/1997 Garrison et al.
5,615,820 A 4/1997 Viola
5,618,303 A 4/1997 Marlow et al.
5,618,307 A 4/1997 Donlon et al.
5,620,452 A 4/1997 Yoon
5,624,452 A 4/1997 Yates

(56) **References Cited**

U.S. PATENT DOCUMENTS

5,628,446 A 5/1997 Geiste et al.
5,628,743 A 5/1997 Cimino
5,630,539 A 5/1997 Plyley et al.
5,630,540 A 5/1997 Blewett
5,632,432 A 5/1997 Schulze et al.
5,632,433 A 5/1997 Grant et al.
5,634,584 A 6/1997 Okorocha et al.
5,636,779 A 6/1997 Palmer
5,636,780 A 6/1997 Green et al.
5,639,008 A 6/1997 Gallagher et al.
5,645,209 A 7/1997 Green et al.
5,647,526 A 7/1997 Green et al.
5,649,937 A 7/1997 Bito et al.
5,651,491 A 7/1997 Heaton et al.
5,651,762 A 7/1997 Bridges
5,653,373 A 8/1997 Green et al.
5,653,374 A 8/1997 Young et al.
5,653,721 A 8/1997 Knodel et al.
5,655,698 A 8/1997 Yoon
5,657,921 A 8/1997 Young et al.
5,662,258 A 9/1997 Knodel et al.
5,662,260 A 9/1997 Yoon
5,667,517 A 9/1997 Hooven
5,667,526 A 9/1997 Levin
5,667,527 A 9/1997 Cook
5,669,544 A 9/1997 Schulze et al.
5,669,918 A 9/1997 Balazs et al.
5,673,840 A 10/1997 Schulze et al.
5,673,841 A 10/1997 Schulze et al.
5,680,981 A 10/1997 Mililli et al.
5,680,982 A 10/1997 Schulze et al.
5,680,983 A 10/1997 Plyley et al.
5,681,341 A 10/1997 Lunsford et al.
5,683,349 A 11/1997 Makower et al.
5,685,474 A 11/1997 Seeber
5,685,826 A 11/1997 Bonutti
5,688,270 A 11/1997 Yates et al.
5,690,269 A 11/1997 Bolanos et al.
5,692,668 A 12/1997 Schulze et al.
5,693,042 A 12/1997 Boiarski et al.
5,695,504 A 12/1997 Gifford, III et al.
5,695,524 A 12/1997 Kelley et al.
5,697,543 A 12/1997 Burdorff
5,697,943 A 12/1997 Sauer et al.
5,700,270 A 12/1997 Peyser et al.
5,702,408 A 12/1997 Wales et al.
5,702,409 A 12/1997 Rayburn et al.
5,704,534 A 1/1998 Huitema et al.
5,706,997 A 1/1998 Green et al.
5,706,998 A 1/1998 Plyley et al.
5,707,392 A 1/1998 Kortenbach
5,709,334 A 1/1998 Sorrentino et al.
5,709,680 A 1/1998 Yates et al.
5,709,706 A 1/1998 Kienzle et al.
5,711,472 A 1/1998 Bryan
5,713,505 A 2/1998 Huitema
5,715,987 A 2/1998 Kelley et al.
5,716,366 A 2/1998 Yates
5,718,359 A 2/1998 Palmer et al.
5,718,360 A 2/1998 Green et al.
5,725,536 A 3/1998 Oberlin et al.
5,725,554 A 3/1998 Simon et al.
5,728,121 A 3/1998 Bimbo et al.
5,730,758 A 3/1998 Allgeyer
5,732,871 A 3/1998 Clark et al.
5,732,872 A 3/1998 Bolduc et al.
5,735,874 A 4/1998 Measamer et al.
5,738,629 A 4/1998 Moll et al.
5,741,271 A 4/1998 Nakao et al.
5,743,456 A 4/1998 Jones et al.
5,749,889 A 5/1998 Bacich et al.
5,749,893 A 5/1998 Vidal et al.
5,752,644 A 5/1998 Bolanos et al.
5,752,965 A 5/1998 Francis et al.
5,752,970 A 5/1998 Yoon
5,758,814 A 6/1998 Gallagher et al.
5,762,255 A 6/1998 Chrisman et al.
5,762,256 A 6/1998 Mastri et al.
5,766,188 A 6/1998 Igaki
5,766,205 A 6/1998 Zvenyatsky et al.
5,769,892 A 6/1998 Kingwell
5,779,130 A 7/1998 Alesi et al.
5,779,131 A 7/1998 Knodel et al.
5,779,132 A 7/1998 Knodel et al.
5,782,396 A 7/1998 Mastri et al.
5,782,397 A 7/1998 Koukline
5,782,859 A 7/1998 Nicholas et al.
5,785,232 A 7/1998 Vidal et al.
5,785,647 A 7/1998 Tompkins et al.
5,787,897 A 8/1998 Kieturakis
5,792,135 A 8/1998 Madhani et al.
5,794,834 A 8/1998 Hamblin et al.
5,797,536 A 8/1998 Smith et al.
5,797,537 A 8/1998 Oberlin et al.
5,797,538 A 8/1998 Heaton et al.
5,797,959 A 8/1998 Castro et al.
5,799,857 A 9/1998 Robertson et al.
5,807,376 A 9/1998 Viola et al.
5,807,378 A 9/1998 Jensen et al.
5,810,721 A 9/1998 Mueller et al.
5,810,811 A 9/1998 Yates et al.
5,810,855 A 9/1998 Rayburn et al.
5,814,055 A 9/1998 Knodel et al.
5,814,057 A 9/1998 Oi et al.
5,817,084 A 10/1998 Jensen
5,817,093 A 10/1998 Williamson, IV et al.
5,820,009 A 10/1998 Melling et al.
5,826,776 A 10/1998 Schulze et al.
5,827,298 A 10/1998 Hart et al.
5,829,662 A 11/1998 Allen et al.
5,833,695 A 11/1998 Yoon
5,836,503 A 11/1998 Ehrenfels et al.
5,839,369 A 11/1998 Chatterjee et al.
5,839,639 A 11/1998 Sauer et al.
5,843,096 A 12/1998 Igaki et al.
5,855,311 A 1/1999 Hamblin et al.
5,855,583 A 1/1999 Wang et al.
5,860,581 A 1/1999 Robertson et al.
5,865,361 A 2/1999 Milliman et al.
5,868,760 A 2/1999 McGuckin, Jr.
5,871,135 A 2/1999 Williamson, IV et al.
5,876,401 A 3/1999 Schulze et al.
5,878,937 A 3/1999 Green et al.
5,893,506 A 4/1999 Powell
5,894,979 A 4/1999 Powell
5,897,562 A 4/1999 Bolanos et al.
5,901,895 A 5/1999 Heaton et al.
5,902,312 A 5/1999 Frater et al.
5,906,577 A 5/1999 Beane et al.
5,906,625 A 5/1999 Bito et al.
5,908,427 A 6/1999 McKean et al.
5,911,353 A 6/1999 Bolanos et al.
5,915,616 A 6/1999 Viola et al.
5,918,791 A 7/1999 Sorrentino et al.
5,919,198 A 7/1999 Graves, Jr. et al.
5,931,853 A 8/1999 McEwen et al.
5,937,951 A 8/1999 Izuchukwu et al.
5,938,667 A 8/1999 Peyser et al.
5,941,442 A 8/1999 Geiste et al.
5,947,984 A 9/1999 Whipple
5,951,576 A 9/1999 Wakabayashi
5,954,259 A 9/1999 Viola et al.
5,964,774 A 10/1999 McKean et al.
5,997,528 A 12/1999 Bisch et al.
5,997,552 A 12/1999 Person et al.
6,003,517 A 12/1999 Sheffield et al.
6,010,054 A 1/2000 Johnson et al.
6,017,356 A 1/2000 Frederick et al.
6,024,741 A 2/2000 Williamson, IV et al.
6,024,748 A 2/2000 Manzo et al.
6,032,849 A 3/2000 Mastri et al.
6,045,560 A 4/2000 McKean et al.
6,050,472 A 4/2000 Shibata
6,053,390 A 4/2000 Green et al.

(56) **References Cited**

U.S. PATENT DOCUMENTS

RE36,720	E	5/2000	Green et al.
6,056,735	A	5/2000	Okada et al.
6,063,025	A	5/2000	Bridges et al.
6,063,097	A	5/2000	Oi et al.
6,066,132	A	5/2000	Chen et al.
6,074,401	A	6/2000	Gardiner et al.
6,079,606	A	6/2000	Milliman et al.
6,083,234	A	7/2000	Nicholas et al.
6,083,241	A	7/2000	Longo et al.
6,083,242	A	7/2000	Cook
6,086,600	A	7/2000	Kortenbach
6,099,551	A	8/2000	Gabbay
6,102,271	A	8/2000	Longo et al.
6,109,500	A	8/2000	Alli et al.
6,117,148	A	9/2000	Ravo et al.
6,117,158	A	9/2000	Measamer et al.
6,119,913	A	9/2000	Adams et al.
H1904	H	10/2000	Yates et al.
6,126,058	A	10/2000	Adams et al.
6,131,790	A	10/2000	Piraka
6,142,933	A	11/2000	Longo et al.
6,155,473	A	12/2000	Tompkins et al.
6,159,146	A	12/2000	El Gazayerli
6,159,200	A	12/2000	Verdura et al.
6,162,208	A	12/2000	Hipps
6,165,188	A	12/2000	Saadat et al.
6,171,330	B1	1/2001	Benchetrit
6,174,318	B1	1/2001	Bates et al.
6,179,195	B1	1/2001	Adams et al.
6,193,129	B1	2/2001	Bittner et al.
6,202,914	B1	3/2001	Geiste et al.
6,214,020	B1	4/2001	Mulhauser et al.
6,214,028	B1	4/2001	Yoon et al.
6,216,698	B1	4/2001	Regula
6,221,007	B1	4/2001	Green
6,231,565	B1	5/2001	Tovey et al.
6,234,178	B1	5/2001	Goble et al.
6,241,139	B1	6/2001	Milliman et al.
6,241,140	B1	6/2001	Adams et al.
6,241,723	B1	6/2001	Heim et al.
6,248,117	B1	6/2001	Blatter
6,250,532	B1	6/2001	Green et al.
6,254,534	B1	7/2001	Butler et al.
6,258,107	B1	7/2001	Balazs et al.
6,264,086	B1	7/2001	McGuckin, Jr.
6,264,087	B1	7/2001	Whitman
6,267,772	B1	7/2001	Mulhauser et al.
6,273,897	B1	8/2001	Dalessandro et al.
6,293,927	B1	9/2001	McGuckin, Jr.
6,302,311	B1	10/2001	Adams et al.
6,309,403	B1	10/2001	Minor et al.
6,315,184	B1	11/2001	Whitman
6,325,810	B1	12/2001	Hamilton et al.
6,330,965	B1	12/2001	Milliman et al.
6,331,181	B1	12/2001	Tierney et al.
6,338,737	B1	1/2002	Toledano
6,343,731	B1	2/2002	Adams et al.
6,346,077	B1	2/2002	Taylor et al.
6,352,503	B1	3/2002	Matsui et al.
6,364,888	B1	4/2002	Niemeyer et al.
6,387,113	B1	5/2002	Hawkins et al.
6,391,038	B2	5/2002	Vargas et al.
6,398,797	B2	6/2002	Bombard et al.
6,402,766	B2	6/2002	Bowman et al.
6,402,780	B2	6/2002	Williamson, IV et al.
RE37,814	E	8/2002	Allgeyer
6,436,107	B1	8/2002	Wang et al.
6,436,110	B2	8/2002	Bowman et al.
6,436,122	B1	8/2002	Frank et al.
6,439,446	B1	8/2002	Perry et al.
6,440,146	B2	8/2002	Nicholas et al.
6,443,973	B1	9/2002	Whitman
6,447,523	B1	9/2002	Middleman et al.
6,450,391	B1	9/2002	Kayan et al.
6,458,077	B1	10/2002	Boebel et al.
6,478,210	B2	11/2002	Adams et al.
6,488,196	B1	12/2002	Fenton, Jr.
6,488,197	B1	12/2002	Whitman
6,491,201	B1	12/2002	Whitman
6,491,701	B2	12/2002	Tierney et al.
6,494,885	B1	12/2002	Dhindsa
6,503,257	B2	1/2003	Grant et al.
6,503,259	B2	1/2003	Huxel et al.
6,505,768	B2	1/2003	Whitman
6,510,854	B2	1/2003	Goble
6,517,528	B1	2/2003	Pantages et al.
6,517,565	B1	2/2003	Whitman et al.
6,517,566	B1	2/2003	Hovland et al.
6,533,157	B1	3/2003	Whitman
6,543,456	B1	4/2003	Freeman
6,551,333	B2	4/2003	Kuhns et al.
6,569,171	B2	5/2003	DeGuillebon et al.
6,578,751	B2	6/2003	Hartwick
6,582,364	B2	6/2003	Butler et al.
6,585,144	B2	7/2003	Adams et al.
6,588,643	B2	7/2003	Bolduc et al.
6,592,597	B2	7/2003	Grant et al.
6,601,749	B2	8/2003	Sullivan et al.
6,605,078	B2	8/2003	Adams
6,616,686	B2	9/2003	Coleman et al.
6,619,529	B2	9/2003	Green et al.
6,629,630	B2	10/2003	Adams
6,629,988	B2	10/2003	Weadock
6,638,285	B2	10/2003	Gabbay
6,638,297	B1	10/2003	Huitema
6,644,532	B2	11/2003	Green et al.
6,645,201	B1	11/2003	Utley et al.
6,648,901	B2	11/2003	Fleischman et al.
6,656,193	B2	12/2003	Grant et al.
6,666,854	B1	12/2003	Lange
6,669,073	B2	12/2003	Milliman et al.
6,681,978	B2	1/2004	Geiste et al.
6,681,979	B2	1/2004	Whitman
6,682,528	B2	1/2004	Frazier et al.
6,692,507	B2	2/2004	Pugsley et al.
6,695,198	B2	2/2004	Adams et al.
6,695,199	B2	2/2004	Whitman
6,698,643	B2	3/2004	Whitman
6,699,235	B2	3/2004	Wallace et al.
6,716,232	B1	4/2004	Vidal et al.
6,716,233	B1	4/2004	Whitman
6,722,552	B2	4/2004	Fenton, Jr.
6,723,087	B2	4/2004	O'Neill et al.
6,726,697	B2	4/2004	Nicholas et al.
6,736,825	B2	5/2004	Blatter et al.
6,749,600	B1	6/2004	Levy
6,752,816	B2	6/2004	Culp et al.
6,755,338	B2	6/2004	Hahnen et al.
6,769,590	B2	8/2004	Vresh et al.
6,769,594	B2	8/2004	Orban, III
6,773,438	B1	8/2004	Knodel et al.
6,780,151	B2	8/2004	Grabover et al.
6,786,382	B1	9/2004	Hoffman
6,786,896	B1	9/2004	Madhani et al.
6,793,652	B1	9/2004	Whitman et al.
6,805,273	B2	10/2004	Bilotti et al.
6,817,508	B1	11/2004	Racenet et al.
6,817,509	B2	11/2004	Geiste et al.
6,820,791	B2	11/2004	Adams
6,821,284	B2	11/2004	Sturtz et al.
6,827,246	B2	12/2004	Sullivan et al.
6,827,712	B2	12/2004	Tovey et al.
6,830,174	B2	12/2004	Hillstead et al.
6,835,199	B2	12/2004	McGuckin, Jr. et al.
6,840,423	B2	1/2005	Adams et al.
6,843,403	B2	1/2005	Whitman
6,846,307	B2	1/2005	Whitman et al.
6,846,308	B2	1/2005	Whitman et al.
6,846,309	B2	1/2005	Whitman et al.
6,849,071	B2	2/2005	Whitman et al.
RE38,708	E	3/2005	Bolanos et al.
6,866,178	B2	3/2005	Adams et al.
6,866,671	B2	3/2005	Tierney et al.
6,872,214	B2	3/2005	Sonnenschein et al.

(56) **References Cited**

U.S. PATENT DOCUMENTS

6,874,669	B2	4/2005	Adams et al.
6,877,647	B2	4/2005	Green et al.
6,905,057	B2	6/2005	Swayze et al.
6,913,608	B2	7/2005	Liddicoat et al.
6,913,613	B2	7/2005	Schwarz et al.
6,936,042	B2	8/2005	Wallace et al.
6,939,358	B2	9/2005	Palacios et al.
6,945,444	B2	9/2005	Gresham et al.
6,953,138	B1	10/2005	Dworak et al.
6,953,139	B2	10/2005	Milliman et al.
6,959,851	B2	11/2005	Heinrich
6,959,852	B2	11/2005	Shelton, IV et al.
6,960,220	B2	11/2005	Marino et al.
6,964,363	B2	11/2005	Wales et al.
6,971,988	B2	12/2005	Orban, III
6,978,921	B2	12/2005	Shelton, IV et al.
6,978,922	B2	12/2005	Bilotti et al.
6,981,628	B2	1/2006	Wales
6,981,978	B2	1/2006	Gannoe
6,986,451	B1	1/2006	Mastri et al.
6,988,649	B2	1/2006	Shelton, IV et al.
6,988,650	B2	1/2006	Schwemberger et al.
6,997,931	B2	2/2006	Sauer et al.
7,000,818	B2	2/2006	Shelton, IV et al.
7,000,819	B2	2/2006	Swayze et al.
7,001,408	B2	2/2006	Knodel et al.
7,008,435	B2	3/2006	Cummins
7,032,798	B2	4/2006	Whitman et al.
7,032,799	B2	4/2006	Viola et al.
7,037,314	B2	5/2006	Armstrong
7,044,352	B2	5/2006	Shelton, IV et al.
7,044,353	B2	5/2006	Mastri et al.
7,052,454	B2	5/2006	Taylor
7,055,731	B2	6/2006	Shelton, IV et al.
7,056,330	B2	6/2006	Gayton
7,059,331	B2	6/2006	Adams et al.
7,059,508	B2	6/2006	Shelton, IV et al.
7,063,712	B2	6/2006	Vargas et al.
7,066,944	B2	6/2006	Laufer et al.
7,070,083	B2	7/2006	Jankowski
7,077,856	B2	7/2006	Whitman
7,080,769	B2	7/2006	Vresh et al.
7,083,075	B2	8/2006	Swayze et al.
7,083,626	B2	8/2006	Hart et al.
7,087,071	B2	8/2006	Nicholas et al.
7,090,673	B2	8/2006	Dycus et al.
7,090,683	B2	8/2006	Brock et al.
7,090,684	B2	8/2006	McGuckin, Jr. et al.
7,094,247	B2	8/2006	Monassevitch et al.
7,097,089	B2	8/2006	Marczyk
7,108,701	B2	9/2006	Evens et al.
7,108,709	B2	9/2006	Cummins
7,111,769	B2	9/2006	Wales et al.
7,114,642	B2	10/2006	Whitman
7,118,582	B1	10/2006	Wang et al.
7,121,446	B2	10/2006	Arad et al.
7,122,028	B2	10/2006	Looper et al.
7,128,253	B2	10/2006	Mastri et al.
7,128,254	B2	10/2006	Shelton, IV et al.
7,128,748	B2	10/2006	Mooradian et al.
7,131,445	B2	11/2006	Amoah
7,134,587	B2	11/2006	Schwemberger et al.
7,140,527	B2	11/2006	Ehrenfels et al.
7,143,923	B2	12/2006	Shelton, IV et al.
7,143,924	B2	12/2006	Scirica et al.
7,143,925	B2	12/2006	Shelton, IV et al.
7,143,926	B2	12/2006	Shelton, IV et al.
7,147,138	B2	12/2006	Shelton, IV
7,147,139	B2	12/2006	Schwemberger et al.
7,147,650	B2	12/2006	Lee
7,156,863	B2	1/2007	Sonnenschein et al.
7,159,750	B2	1/2007	Racenet et al.
7,160,299	B2	1/2007	Baily
7,168,604	B2	1/2007	Milliman et al.
7,172,104	B2	2/2007	Scirica et al.
7,179,267	B2	2/2007	Nolan et al.
7,182,239	B1	2/2007	Myers
7,188,758	B2	3/2007	Viola et al.
7,207,471	B2	4/2007	Heinrich et al.
7,207,472	B2	4/2007	Wukusick et al.
7,208,005	B2	4/2007	Frecker et al.
7,210,609	B2	5/2007	Leiboff et al.
7,213,736	B2	5/2007	Wales et al.
7,220,272	B2	5/2007	Weadock
7,225,963	B2	6/2007	Scirica
7,225,964	B2	6/2007	Mastri et al.
7,229,408	B2	6/2007	Douglas et al.
7,234,624	B2	6/2007	Gresham et al.
7,235,089	B1	6/2007	McGuckin, Jr.
7,237,708	B1	7/2007	Guy et al.
7,238,195	B2	7/2007	Viola
7,241,288	B2	7/2007	Braun
7,246,734	B2	7/2007	Shelton, IV
7,252,660	B2	8/2007	Kunz
7,258,262	B2	8/2007	Mastri et al.
7,267,679	B2	9/2007	McGuckin, Jr. et al.
7,278,562	B2	10/2007	Mastri et al.
7,278,563	B1	10/2007	Green
7,296,722	B2	11/2007	Ivanko
7,296,724	B2	11/2007	Green et al.
7,297,149	B2	11/2007	Vitali et al.
7,300,450	B2	11/2007	Vleugels et al.
7,303,106	B2	12/2007	Milliman et al.
7,303,107	B2	12/2007	Milliman et al.
7,303,108	B2	12/2007	Shelton, IV
7,308,998	B2	12/2007	Mastri et al.
7,328,828	B2	2/2008	Ortiz et al.
7,328,829	B2	2/2008	Arad et al.
7,334,717	B2	2/2008	Rethy et al.
7,334,718	B2	2/2008	McAlister et al.
7,338,505	B2	3/2008	Belson
7,338,513	B2	3/2008	Lee et al.
7,343,920	B2	3/2008	Toby et al.
RE40,237	E	4/2008	Bilotti et al.
7,354,447	B2	4/2008	Shelton, IV et al.
7,357,287	B2	4/2008	Shelton, IV et al.
7,364,060	B2	4/2008	Milliman
7,364,061	B2	4/2008	Swayze et al.
7,377,928	B2	5/2008	Zubik et al.
7,380,695	B2	6/2008	Doll et al.
7,380,696	B2	6/2008	Shelton, IV et al.
7,396,356	B2	7/2008	Mollenauer
7,398,907	B2	7/2008	Racenet et al.
7,398,908	B2	7/2008	Holsten et al.
7,401,721	B2	7/2008	Holsten et al.
7,404,508	B2	7/2008	Smith et al.
7,404,509	B2	7/2008	Ortiz et al.
7,404,822	B2	7/2008	Viart et al.
7,407,074	B2	8/2008	Ortiz et al.
7,407,075	B2	8/2008	Holsten et al.
7,407,076	B2	8/2008	Racenet et al.
7,407,077	B2	8/2008	Ortiz et al.
7,407,078	B2	8/2008	Shelton, IV et al.
7,410,086	B2	8/2008	Ortiz et al.
7,416,101	B2	8/2008	Shelton, IV et al.
RE40,514	E	9/2008	Mastri et al.
7,419,080	B2	9/2008	Smith et al.
7,419,081	B2	9/2008	Ehrenfels et al.
7,422,136	B1	9/2008	Marczyk
7,422,139	B2	9/2008	Shelton, IV et al.
7,424,965	B2	9/2008	Racenet et al.
7,431,188	B1	10/2008	Marczyk
7,431,189	B2	10/2008	Shelton, IV et al.
7,431,730	B2	10/2008	Viola
7,434,715	B2	10/2008	Shelton, IV et al.
7,434,717	B2	10/2008	Shelton, IV et al.
7,438,209	B1	10/2008	Hess et al.
7,438,718	B2	10/2008	Milliman et al.
7,441,684	B2	10/2008	Shelton, IV et al.
7,441,685	B1	10/2008	Boudreaux
7,442,201	B2	10/2008	Pugsley et al.
7,448,525	B2	11/2008	Shelton, IV et al.
7,455,208	B2	11/2008	Wales et al.
7,455,676	B2	11/2008	Holsten et al.

(56) **References Cited**

U.S. PATENT DOCUMENTS

7,455,682 B2 11/2008 Viola
7,461,767 B2 12/2008 Viola et al.
7,464,846 B2 12/2008 Shelton, IV et al.
7,464,847 B2 * 12/2008 Viola A61B 17/07207 227/175.2
7,464,849 B2 12/2008 Shelton, IV et al.
7,467,740 B2 12/2008 Shelton, IV et al.
7,472,814 B2 1/2009 Mastri et al.
7,472,815 B2 1/2009 Shelton, IV et al.
7,472,816 B2 1/2009 Holsten et al.
7,473,221 B2 1/2009 Ewers et al.
7,481,347 B2 1/2009 Roy
7,481,348 B2 1/2009 Marczyk
7,481,349 B2 1/2009 Holsten et al.
7,481,824 B2 1/2009 Boudreaux et al.
7,487,899 B2 2/2009 Shelton, IV et al.
7,490,749 B2 2/2009 Schall et al.
7,491,232 B2 2/2009 Bolduc et al.
7,494,039 B2 2/2009 Racenet et al.
7,494,499 B2 2/2009 Nagase et al.
7,500,979 B2 3/2009 Hueil et al.
7,503,474 B2 3/2009 Hillstead et al.
7,506,790 B2 3/2009 Shelton, IV
7,506,791 B2 3/2009 Omaits et al.
7,510,107 B2 3/2009 Timm et al.
7,513,408 B2 4/2009 Shelton, IV et al.
7,517,356 B2 4/2009 Heinrich
7,524,320 B2 4/2009 Tierney et al.
7,527,632 B2 5/2009 Houghton et al.
7,530,984 B2 5/2009 Sonnenschein et al.
7,546,939 B2 6/2009 Adams et al.
7,546,940 B2 6/2009 Milliman et al.
7,547,312 B2 6/2009 Bauman et al.
7,549,563 B2 6/2009 Mather et al.
7,549,564 B2 6/2009 Boudreaux
7,549,998 B2 6/2009 Braun
7,556,185 B2 7/2009 Viola
7,556,186 B2 7/2009 Milliman
7,556,647 B2 7/2009 Drews et al.
7,559,449 B2 7/2009 Viola
7,559,450 B2 7/2009 Wales et al.
7,559,452 B2 7/2009 Wales et al.
7,565,993 B2 7/2009 Milliman et al.
7,568,603 B2 8/2009 Shelton, IV et al.
7,568,604 B2 8/2009 Ehrenfels et al.
7,575,144 B2 8/2009 Ortiz et al.
7,588,174 B2 9/2009 Holsten et al.
7,588,175 B2 9/2009 Timm et al.
7,588,176 B2 9/2009 Timm et al.
7,588,177 B2 9/2009 Racenet
7,597,229 B2 10/2009 Boudreaux et al.
7,597,230 B2 10/2009 Racenet et al.
7,600,663 B2 10/2009 Green
7,604,150 B2 10/2009 Boudreaux
7,604,151 B2 10/2009 Hess et al.
7,607,557 B2 10/2009 Shelton, IV et al.
7,611,038 B2 11/2009 Racenet et al.
7,624,902 B2 12/2009 Marczyk et al.
7,624,903 B2 12/2009 Green et al.
7,631,793 B2 12/2009 Rethy et al.
7,631,794 B2 12/2009 Rethy et al.
7,635,074 B2 12/2009 Olson et al.
7,637,409 B2 12/2009 Marczyk
7,641,091 B2 1/2010 Olson et al.
7,641,092 B2 1/2010 Kruszynski et al.
7,641,095 B2 1/2010 Viola
7,644,848 B2 1/2010 Swayze et al.
7,648,519 B2 1/2010 Lee et al.
7,651,017 B2 1/2010 Ortiz et al.
7,654,431 B2 2/2010 Hueil et al.
7,658,311 B2 2/2010 Boudreaux
7,658,312 B2 2/2010 Vidal et al.
7,662,161 B2 2/2010 Briganti et al.
7,665,646 B2 2/2010 Prommersberger
7,665,647 B2 2/2010 Shelton, IV et al.
7,669,746 B2 3/2010 Shelton, IV
7,669,747 B2 3/2010 Weisenburgh, II et al.
7,670,334 B2 3/2010 Hueil et al.
7,673,780 B2 3/2010 Shelton, IV et al.
7,673,781 B2 3/2010 Swayze et al.
7,673,782 B2 3/2010 Hess et al.
7,673,783 B2 3/2010 Morgan et al.
7,674,255 B2 3/2010 Braun
7,682,686 B2 3/2010 Curro et al.
7,686,201 B2 3/2010 Csiky
7,686,826 B2 3/2010 Lee et al.
7,691,098 B2 4/2010 Wallace et al.
7,694,864 B2 4/2010 Okada et al.
7,694,865 B2 4/2010 Scirica
7,699,204 B2 4/2010 Viola
7,699,844 B2 4/2010 Utley et al.
7,699,859 B2 4/2010 Bombard et al.
7,703,653 B2 4/2010 Shah et al.
7,708,180 B2 5/2010 Murray et al.
7,708,181 B2 5/2010 Cole et al.
7,708,758 B2 5/2010 Lee et al.
7,717,312 B2 5/2010 Beetel
7,717,313 B2 5/2010 Criscuolo et al.
7,717,873 B2 5/2010 Swick
7,721,930 B2 5/2010 McKenna et al.
7,721,931 B2 5/2010 Shelton, IV et al.
7,721,933 B2 5/2010 Ehrenfels et al.
7,721,934 B2 5/2010 Shelton, IV et al.
7,721,936 B2 5/2010 Shalton, IV et al.
7,726,537 B2 6/2010 Olson et al.
7,726,538 B2 6/2010 Holsten et al.
7,731,072 B2 6/2010 Timm et al.
7,735,703 B2 6/2010 Morgan et al.
7,736,306 B2 6/2010 Brustad et al.
7,738,971 B2 6/2010 Swayze et al.
7,740,159 B2 6/2010 Shelton, IV et al.
7,743,960 B2 6/2010 Whitman et al.
7,744,624 B2 6/2010 Bettuchi
7,744,627 B2 6/2010 Orban, III et al.
7,744,628 B2 6/2010 Viola
7,753,245 B2 7/2010 Boudreaux et al.
7,753,904 B2 7/2010 Shelton, IV et al.
7,758,612 B2 7/2010 Shipp
7,766,207 B2 8/2010 Mather et al.
7,766,209 B2 8/2010 Baxter, III et al.
7,766,210 B2 8/2010 Shelton, IV et al.
7,766,821 B2 8/2010 Brunnen et al.
7,770,773 B2 8/2010 Whitman et al.
7,770,774 B2 8/2010 Mastri et al.
7,770,775 B2 8/2010 Shelton, IV et al.
7,770,776 B2 8/2010 Chen et al.
7,776,060 B2 8/2010 Mooradian et al.
7,780,054 B2 8/2010 Wales
7,780,055 B2 8/2010 Scirica et al.
7,780,685 B2 8/2010 Hunt et al.
7,784,662 B2 8/2010 Wales et al.
7,784,663 B2 8/2010 Shelton, IV
7,789,889 B2 9/2010 Zubik et al.
7,793,812 B2 9/2010 Moore et al.
7,794,475 B2 9/2010 Hess et al.
7,798,386 B2 9/2010 Schall et al.
7,799,039 B2 9/2010 Shelton, IV et al.
7,803,151 B2 9/2010 Whitman
7,806,891 B2 10/2010 Nowlin et al.
7,810,690 B2 10/2010 Bilotti et al.
7,810,691 B2 10/2010 Boyden et al.
7,810,692 B2 10/2010 Hall et al.
7,810,693 B2 10/2010 Broehl et al.
7,815,092 B2 10/2010 Whitman et al.
7,819,296 B2 10/2010 Hueil et al.
7,819,297 B2 10/2010 Doll et al.
7,819,298 B2 10/2010 Hall et al.
7,819,299 B2 10/2010 Shelton, IV et al.
7,823,592 B2 11/2010 Bettuchi et al.
7,824,426 B2 11/2010 Racenet et al.
7,828,189 B2 11/2010 Holsten et al.
7,828,808 B2 11/2010 Hinman et al.
7,832,408 B2 11/2010 Shelton, IV et al.
7,832,611 B2 11/2010 Boyden et al.

(56) **References Cited**

U.S. PATENT DOCUMENTS

7,832,612	B2	11/2010	Baxter, III et al.
7,833,234	B2	11/2010	Bailly et al.
7,837,079	B2	11/2010	Holsten et al.
7,837,080	B2	11/2010	Schwemberger
7,837,081	B2	11/2010	Holsten et al.
7,837,694	B2	11/2010	Tethrake et al.
7,842,028	B2	11/2010	Lee
7,845,533	B2	12/2010	Marczyk et al.
7,845,534	B2	12/2010	Viola et al.
7,845,535	B2	12/2010	Scircia
7,845,536	B2	12/2010	Viola et al.
7,845,537	B2	12/2010	Shelton, IV et al.
7,846,149	B2	12/2010	Jankowski
7,857,183	B2	12/2010	Shelton, IV
7,857,185	B2	12/2010	Swayze et al.
7,857,186	B2	12/2010	Baxter, III et al.
7,861,906	B2	1/2011	Doll et al.
7,862,502	B2	1/2011	Pool et al.
7,866,525	B2	1/2011	Scirica
7,866,527	B2	1/2011	Hall et al.
7,870,989	B2	1/2011	Viola et al.
7,871,418	B2	1/2011	Thompson et al.
7,879,070	B2	2/2011	Ortiz et al.
7,883,461	B2	2/2011	Albrecht et al.
7,886,952	B2	2/2011	Scirica et al.
7,891,531	B1	2/2011	Ward
7,891,532	B2	2/2011	Mastri et al.
7,896,214	B2	3/2011	Farascioni
7,896,215	B2	3/2011	Adams et al.
7,896,897	B2	3/2011	Gresham et al.
7,900,805	B2	3/2011	Shelton, IV et al.
7,905,380	B2	3/2011	Shelton, IV et al.
7,905,381	B2	3/2011	Baxter, III et al.
7,905,889	B2	3/2011	Catanese, III et al.
7,905,902	B2	3/2011	Huitema et al.
7,909,220	B2	3/2011	Viola
7,909,221	B2	3/2011	Viola et al.
7,913,891	B2	3/2011	Doll et al.
7,913,893	B2	3/2011	Mastri et al.
7,914,543	B2	3/2011	Roth et al.
7,918,230	B2	4/2011	Whitman et al.
7,918,376	B1	4/2011	Knodel et al.
7,918,377	B2	4/2011	Measamer et al.
7,922,061	B2	4/2011	Shelton, IV et al.
7,922,063	B2	4/2011	Zemlok et al.
7,922,743	B2	4/2011	Heinrich et al.
7,926,691	B2	4/2011	Viola et al.
7,931,877	B2	4/2011	Steffens et al.
7,934,630	B2	5/2011	Shelton, IV et al.
7,934,631	B2	5/2011	Balbierz et al.
7,938,307	B2	5/2011	Bettuchi
7,942,303	B2	5/2011	Shah
7,942,890	B2	5/2011	D'Agostino et al.
7,950,560	B2	5/2011	Zemlok et al.
7,950,561	B2	5/2011	Aranyi
7,951,071	B2	5/2011	Whitman et al.
7,954,682	B2	6/2011	Giordano et al.
7,954,684	B2	6/2011	Boudreaux
7,954,686	B2	6/2011	Baxter, III et al.
7,954,687	B2	6/2011	Zemlok et al.
7,955,253	B2	6/2011	Ewers et al.
7,955,257	B2	6/2011	Frasier et al.
7,959,050	B2	6/2011	Smith et al.
7,959,051	B2	6/2011	Smith et al.
7,963,432	B2	6/2011	Knodel et al.
7,963,433	B2	6/2011	Whitman et al.
7,966,799	B2	6/2011	Morgan et al.
7,967,180	B2	6/2011	Scirica
7,967,181	B2	6/2011	Viola et al.
7,967,791	B2	6/2011	Franer et al.
7,980,443	B2	7/2011	Scheib et al.
7,981,132	B2	7/2011	Dubrul et al.
7,988,026	B2	8/2011	Knodel et al.
7,988,027	B2	8/2011	Olson et al.
7,988,028	B2	8/2011	Farascioni et al.
7,992,757	B2	8/2011	Wheeler et al.
7,997,469	B2	8/2011	Olson et al.
8,002,696	B2	8/2011	Suzuki
8,002,795	B2	8/2011	Beetel
8,006,885	B2	8/2011	Marczyk
8,006,889	B2	8/2011	Adams et al.
8,011,550	B2	9/2011	Aranyi et al.
8,011,551	B2	9/2011	Marczyk et al.
8,011,553	B2	9/2011	Mastri et al.
8,011,555	B2	9/2011	Tarinelli et al.
8,016,176	B2	9/2011	Kasvikis et al.
8,016,177	B2	9/2011	Bettuchi et al.
8,016,178	B2	9/2011	Olson et al.
8,016,855	B2	9/2011	Whitman et al.
8,016,858	B2	9/2011	Whitman
8,020,742	B2	9/2011	Marczyk
8,020,743	B2	9/2011	Shelton, IV
8,021,389	B2	9/2011	Molz, IV
8,025,199	B2	9/2011	Whitman et al.
8,028,883	B2	10/2011	Stopek
8,028,884	B2	10/2011	Sniffin et al.
8,028,885	B2	10/2011	Smith et al.
8,034,077	B2	10/2011	Smith et al.
8,038,045	B2	10/2011	Bettuchi et al.
8,038,046	B2	10/2011	Smith et al.
8,043,207	B2	10/2011	Adams
8,043,328	B2	10/2011	Hahnen et al.
8,056,787	B2	11/2011	Boudreaux et al.
8,056,788	B2	11/2011	Mastri et al.
8,061,558	B2	11/2011	Jordan et al.
8,062,330	B2	11/2011	Prommersberger et al.
8,066,167	B2	11/2011	Measamer et al.
8,066,168	B2	11/2011	Vidal et al.
D650,074	S	12/2011	Hunt et al.
8,075,476	B2	12/2011	Vargas
8,083,118	B2	12/2011	Milliman et al.
8,083,119	B2	12/2011	Prommersberger
8,083,120	B2	12/2011	Shelton, IV et al.
8,091,756	B2	1/2012	Viola
8,096,457	B1	1/2012	Manoux et al.
8,097,017	B2	1/2012	Viola
8,100,310	B2	1/2012	Zemlok
8,105,350	B2	1/2012	Lee et al.
8,109,426	B2	2/2012	Milliman et al.
8,113,405	B2	2/2012	Milliman
8,113,410	B2	2/2012	Hall et al.
8,114,100	B2	2/2012	Smith et al.
8,123,103	B2	2/2012	Milliman
8,123,767	B2	2/2012	Bauman et al.
8,127,975	B2	3/2012	Olson et al.
8,128,559	B2	3/2012	Minnelli
8,128,645	B2	3/2012	Sonnenschein et al.
8,132,703	B2	3/2012	Milliman et al.
8,132,706	B2	3/2012	Marczyk et al.
8,136,712	B2	3/2012	Zingman
8,136,713	B2	3/2012	Hathaway et al.
8,141,762	B2	3/2012	Bedi et al.
8,141,763	B2	3/2012	Milliman
8,146,790	B2	4/2012	Milliman
8,147,456	B2	4/2012	Fisher et al.
8,152,041	B2	4/2012	Kostrzewski
8,152,773	B2	4/2012	Albrecht et al.
8,157,145	B2	4/2012	Shelton, IV et al.
8,157,148	B2	4/2012	Scirica
8,157,152	B2	4/2012	Holsten et al.
8,157,153	B2	4/2012	Shelton, IV et al.
8,161,977	B2	4/2012	Shelton, IV et al.
8,162,197	B2	4/2012	Mastri et al.
8,167,185	B2	5/2012	Shelton, IV et al.
8,167,895	B2	5/2012	D'Agostino et al.
8,172,120	B2	5/2012	Boyden et al.
8,172,122	B2	5/2012	Kasvikis et al.
8,172,124	B2	5/2012	Shelton, IV et al.
8,177,797	B2	5/2012	Shimoji et al.
8,186,555	B2	5/2012	Shelton, IV et al.
8,186,560	B2	5/2012	Hess et al.
8,191,752	B2	6/2012	Scirica
8,196,795	B2	6/2012	Moore et al.
8,196,796	B2	6/2012	Shelton, IV et al.

(56) **References Cited**

U.S. PATENT DOCUMENTS

8,201,721	B2	6/2012	Zemlok et al.
8,205,780	B2	6/2012	Sorrentino et al.
8,205,781	B2	6/2012	Baxter, III et al.
8,210,411	B2	7/2012	Yates et al.
8,210,414	B2	7/2012	Bettuchi et al.
8,210,415	B2	7/2012	Ward
8,210,416	B2	7/2012	Milliman et al.
8,211,125	B2	7/2012	Spivey
8,215,531	B2	7/2012	Shelton, IV et al.
8,215,533	B2	7/2012	Viola et al.
8,220,688	B2	7/2012	Laurent et al.
8,220,690	B2	7/2012	Hess et al.
8,225,799	B2	7/2012	Bettuchi
8,226,553	B2	7/2012	Shelton, IV et al.
8,231,040	B2	7/2012	Zemlok et al.
8,231,042	B2	7/2012	Hessler et al.
8,231,043	B2	7/2012	Tarinelli et al.
8,236,010	B2	8/2012	Ortiz et al.
8,241,271	B2	8/2012	Millman et al.
8,241,308	B2	8/2012	Kortenbach et al.
8,241,322	B2	8/2012	Whitman et al.
8,245,898	B2	8/2012	Smith et al.
8,245,899	B2	8/2012	Swensgard et al.
8,245,900	B2	8/2012	Scirica
8,245,901	B2	8/2012	Stopek
8,256,654	B2	9/2012	Bettuchi et al.
8,256,655	B2	9/2012	Sniffin et al.
8,257,251	B2	9/2012	Shelton, IV et al.
8,267,300	B2	9/2012	Boudreaux
8,272,553	B2	9/2012	Mastri et al.
8,276,801	B2	10/2012	Zemlok et al.
8,276,802	B2	10/2012	Kostrzewski
8,281,973	B2	10/2012	Wenchell et al.
8,286,845	B2	10/2012	Perry et al.
8,286,846	B2	10/2012	Smith et al.
8,287,561	B2	10/2012	Nunez et al.
8,292,151	B2	10/2012	Viola
8,292,155	B2	10/2012	Shelton, IV et al.
8,292,157	B2	10/2012	Smith et al.
8,292,888	B2	10/2012	Whitman
8,298,189	B2	10/2012	Fisher et al.
8,308,040	B2	11/2012	Huang et al.
8,308,042	B2	11/2012	Aranyi
8,308,046	B2	11/2012	Prommersberger
8,308,638	B2	11/2012	Hart
8,313,496	B2	11/2012	Sauer et al.
8,317,070	B2	11/2012	Hueil et al.
8,317,071	B1	11/2012	Knodel
8,317,074	B2	11/2012	Ortiz et al.
8,322,455	B2	12/2012	Shelton, IV et al.
8,322,589	B2	12/2012	Boudreaux
8,322,590	B2	12/2012	Patel et al.
8,328,062	B2	12/2012	Viola
8,328,063	B2	12/2012	Milliman et al.
8,328,064	B2	12/2012	Racenet et al.
8,333,313	B2	12/2012	Boudreaux et al.
8,333,691	B2	12/2012	Schaaf
8,336,753	B2	12/2012	Olson et al.
8,337,517	B2	12/2012	Van Dalen
8,348,123	B2	1/2013	Scirica et al.
8,348,127	B2	1/2013	Marczyk
8,348,129	B2	1/2013	Bedi et al.
8,348,131	B2	1/2013	Omaits et al.
8,348,837	B2	1/2013	Wenchell
8,348,972	B2	1/2013	Soltz et al.
8,353,437	B2	1/2013	Boudreaux
8,353,438	B2	1/2013	Baxter, III et al.
8,353,439	B2	1/2013	Baxter, III et al.
8,357,144	B2	1/2013	Whitman et al.
8,360,296	B2	1/2013	Zingman
8,360,297	B2	1/2013	Shelton, IV et al.
8,360,298	B2	1/2013	Farascioni et al.
8,360,299	B2	1/2013	Zemlok et al.
8,365,973	B1	2/2013	White et al.
8,365,976	B2	2/2013	Hess et al.
8,371,491	B2	2/2013	Huitema et al.
8,371,492	B2	2/2013	Aranyi et al.
8,371,493	B2	2/2013	Aranyi et al.
8,372,094	B2	2/2013	Bettuchi et al.
8,393,513	B2	3/2013	Jankowski
8,393,514	B2	3/2013	Shelton, IV et al.
8,397,971	B2	3/2013	Yates et al.
8,398,669	B2	3/2013	Kim
8,403,198	B2	3/2013	Sorrentino et al.
8,408,439	B2	4/2013	Huang et al.
8,408,442	B2	4/2013	Racenet et al.
8,409,079	B2	4/2013	Okamoto et al.
8,413,870	B2	4/2013	Pastorelli et al.
8,413,871	B2	4/2013	Racenet et al.
8,413,872	B2	4/2013	Patel
8,414,577	B2	4/2013	Boudreaux et al.
8,424,737	B2	4/2013	Scirica
8,424,740	B2	4/2013	Shelton, IV et al.
8,424,741	B2	4/2013	McGuckin, Jr. et al.
8,439,246	B1	5/2013	Knodel
8,444,036	B2	5/2013	Shelton, IV
8,453,904	B2	6/2013	Eskaros et al.
8,453,907	B2	6/2013	Laurent et al.
8,453,908	B2	6/2013	Bedi et al.
8,453,912	B2	6/2013	Mastri et al.
8,453,914	B2	6/2013	Laurent et al.
8,459,520	B2	6/2013	Giordano et al.
8,459,525	B2	6/2013	Yates et al.
8,464,922	B2	6/2013	Marczyk
8,464,923	B2	6/2013	Shelton, IV
8,464,924	B2	6/2013	Gresham et al.
8,464,925	B2	6/2013	Hull et al.
8,465,515	B2	6/2013	Drew et al.
8,474,677	B2	7/2013	Woodard, Jr. et al.
8,475,457	B2	7/2013	Shano
8,479,967	B2	7/2013	Marczyk
8,479,969	B2	7/2013	Shelton, IV
8,485,412	B2	7/2013	Shelton, IV et al.
8,485,413	B2	7/2013	Scheib et al.
8,485,414	B2	7/2013	Criscuolo et al.
8,485,970	B2	7/2013	Widenhouse et al.
8,490,853	B2	7/2013	Criscuolo et al.
8,491,603	B2	7/2013	Yeung et al.
8,496,156	B2	7/2013	Sniffin et al.
8,499,993	B2	8/2013	Shelton, IV et al.
8,517,239	B2	8/2013	Scheib et al.
8,517,241	B2	8/2013	Nicholas et al.
8,517,243	B2	8/2013	Giordano et al.
8,517,244	B2	8/2013	Shelton, IV et al.
8,517,931	B2	8/2013	Minnelli et al.
8,523,043	B2	9/2013	Ullrich et al.
8,523,881	B2	9/2013	Cabiri et al.
8,529,600	B2	9/2013	Woodard, Jr. et al.
8,534,528	B2	9/2013	Shelton, IV
8,540,128	B2	9/2013	Shelton, IV et al.
8,540,129	B2	9/2013	Baxter, III et al.
8,540,130	B2	9/2013	Moore et al.
8,540,131	B2	9/2013	Swayze
8,540,133	B2	9/2013	Bedi et al.
8,540,733	B2	9/2013	Whitman et al.
8,556,151	B2	10/2013	Viola
8,556,918	B2	10/2013	Bauman et al.
8,561,870	B2	10/2013	Baxter, III et al.
8,561,873	B2	10/2013	Ingmanson et al.
8,567,656	B2	10/2013	Shelton, IV et al.
8,573,459	B2	11/2013	Smith et al.
8,573,461	B2	11/2013	Shelton, IV et al.
8,573,462	B2	11/2013	Smith et al.
8,573,465	B2	11/2013	Shelton, IV
8,579,176	B2	11/2013	Smith et al.
8,579,178	B2	11/2013	Holsten et al.
8,579,937	B2	11/2013	Gresham
8,584,919	B2	11/2013	Hueil et al.
8,590,760	B2	11/2013	Cummins et al.
8,590,762	B2	11/2013	Hess et al.
8,590,764	B2	11/2013	Hartwick et al.
8,602,287	B2	12/2013	Yates et al.
8,602,288	B2	12/2013	Shelton, IV et al.
8,608,043	B2	12/2013	Scirica

(56) **References Cited**

U.S. PATENT DOCUMENTS

8,608,044 B2 12/2013 Hueil et al.
8,608,045 B2 12/2013 Smith et al.
8,608,046 B2 12/2013 Laurent et al.
8,616,431 B2 12/2013 Timm et al.
8,622,274 B2 1/2014 Yates et al.
8,622,275 B2 1/2014 Baxter, III et al.
8,627,993 B2 1/2014 Smith et al.
8,627,995 B2 1/2014 Smith et al.
8,631,987 B2 1/2014 Shelton, IV et al.
8,631,993 B2 1/2014 Kostrzewski
8,632,462 B2 1/2014 Yoo et al.
8,632,525 B2 1/2014 Kerr et al.
8,632,535 B2 1/2014 Shelton, IV et al.
8,632,563 B2 1/2014 Nagase et al.
8,636,187 B2 1/2014 Hueil et al.
8,636,191 B2 1/2014 Meagher
8,636,736 B2 1/2014 Yates et al.
8,640,788 B2 2/2014 Dachs, II et al.
8,640,940 B2 2/2014 Ohdaira
8,652,120 B2 2/2014 Giordano et al.
8,657,174 B2 2/2014 Yates et al.
8,657,176 B2 2/2014 Shelton, IV et al.
8,657,178 B2 2/2014 Hueil et al.
8,668,129 B2 3/2014 Olson
8,668,130 B2 3/2014 Hess et al.
8,672,206 B2 3/2014 Aranyi et al.
8,672,207 B2 3/2014 Shelton, IV et al.
8,672,208 B2 3/2014 Hess et al.
8,672,839 B2 3/2014 Ewers et al.
8,672,951 B2 3/2014 Smith et al.
8,679,154 B2 3/2014 Smith et al.
8,679,156 B2 3/2014 Smith et al.
8,684,253 B2 4/2014 Giordano et al.
8,695,866 B2 4/2014 Leimbach et al.
8,701,958 B2 4/2014 Shelton, IV et al.
8,701,959 B2 4/2014 Shah
8,708,210 B2 4/2014 Zemlok et al.
8,708,213 B2 4/2014 Shelton, IV et al.
8,714,429 B2 5/2014 Demmy
8,720,766 B2 5/2014 Hess et al.
8,721,630 B2 5/2014 Ortiz et al.
8,727,197 B2 5/2014 Hess et al.
8,727,961 B2 5/2014 Ziv
8,733,612 B2 5/2014 Ma
8,733,613 B2 5/2014 Huitema et al.
8,734,336 B2 5/2014 Bonadio et al.
8,734,478 B2 5/2014 Widenhouse et al.
8,740,034 B2 6/2014 Morgan et al.
8,740,037 B2 6/2014 Shelton, IV et al.
8,740,038 B2 6/2014 Shelton, IV et al.
8,746,529 B2 6/2014 Shelton, IV et al.
8,746,530 B2 6/2014 Giordano et al.
8,746,535 B2 6/2014 Shelton, IV et al.
8,747,238 B2 6/2014 Shelton, IV et al.
8,752,699 B2 6/2014 Morgan et al.
8,752,747 B2 6/2014 Shelton, IV et al.
8,752,749 B2 6/2014 Moore et al.
8,757,465 B2 6/2014 Woodard, Jr. et al.
8,758,235 B2 6/2014 Jaworek
8,758,391 B2 6/2014 Swayze et al.
8,763,875 B2 7/2014 Morgan et al.
8,763,877 B2 7/2014 Schall et al.
8,763,879 B2 7/2014 Shelton, IV et al.
8,764,773 B2 7/2014 Harari et al.
8,770,458 B2 7/2014 Scirica
8,770,459 B2 7/2014 Racenet et al.
8,770,460 B2 7/2014 Belzer
8,777,004 B2 7/2014 Shelton, IV et al.
8,783,541 B2 7/2014 Shelton, IV et al.
8,783,542 B2 7/2014 Riestenberg et al.
8,783,543 B2 7/2014 Shelton, IV et al.
8,784,304 B2 7/2014 Mikkaichi et al.
8,789,739 B2 7/2014 Swensgard
8,789,740 B2 7/2014 Baxter, III et al.
8,789,741 B2 7/2014 Baxter, III et al.
8,794,497 B2 8/2014 Zingman
8,800,838 B2 8/2014 Shelton, IV
8,800,840 B2 8/2014 Jankowski
8,800,841 B2 8/2014 Ellerhorst et al.
8,801,734 B2 8/2014 Shelton, IV et al.
8,801,735 B2 8/2014 Shelton, IV et al.
8,808,325 B2 8/2014 Hess et al.
8,814,024 B2 8/2014 Woodard, Jr. et al.
8,814,788 B2 8/2014 Gan
8,820,603 B2 9/2014 Shelton, IV et al.
8,820,605 B2 9/2014 Shelton, IV
8,827,133 B2 9/2014 Shelton, IV et al.
8,827,134 B2 9/2014 Viola et al.
8,827,903 B2 9/2014 Shelton, IV et al.
8,833,632 B2 9/2014 Swensgard
8,834,464 B2 9/2014 Stewart et al.
8,840,003 B2 9/2014 Morgan et al.
8,840,603 B2 9/2014 Shelton, IV et al.
8,844,789 B2 9/2014 Shelton, IV et al.
8,851,354 B2 10/2014 Swensgard et al.
8,857,693 B2 10/2014 Schuckmann et al.
8,857,694 B2 10/2014 Shelton, IV et al.
8,858,538 B2 10/2014 Belson et al.
8,858,571 B2 10/2014 Shelton, IV et al.
8,858,590 B2 10/2014 Shelton, IV et al.
8,864,007 B2 10/2014 Widenhouse et al.
8,864,009 B2 10/2014 Shelton, IV et al.
8,875,971 B2 11/2014 Hall et al.
8,875,972 B2 11/2014 Weisenburgh, II et al.
8,876,857 B2 11/2014 Burbank
8,888,695 B2 11/2014 Piskun et al.
8,893,946 B2 11/2014 Boudreaux et al.
8,893,949 B2 11/2014 Shelton, IV et al.
8,899,463 B2 12/2014 Schall et al.
8,899,465 B2 12/2014 Shelton, IV et al.
8,899,466 B2 12/2014 Baxter, III et al.
8,905,977 B2 12/2014 Shelton et al.
8,910,847 B2 12/2014 Nalagatla et al.
8,911,471 B2 12/2014 Spivey et al.
8,920,435 B2 12/2014 Smith et al.
8,925,782 B2 1/2015 Shelton, IV
8,925,788 B2 1/2015 Hess et al.
8,926,506 B2 1/2015 Widenhouse et al.
8,926,598 B2 1/2015 Mollere et al.
8,931,682 B2 1/2015 Timm et al.
8,956,390 B2 2/2015 Shah et al.
8,960,519 B2 2/2015 Whitman et al.
8,967,448 B2 3/2015 Carter et al.
8,973,803 B2 3/2015 Hall et al.
8,973,804 B2 3/2015 Hess et al.
8,974,440 B2 3/2015 Farritor et al.
8,978,954 B2 3/2015 Shelton, IV et al.
8,978,955 B2 3/2015 Aronhalt et al.
8,978,956 B2 3/2015 Schall et al.
8,991,676 B2 3/2015 Hess et al.
8,991,677 B2 3/2015 Moore et al.
8,992,422 B2 3/2015 Spivey et al.
8,998,058 B2 4/2015 Moore et al.
9,005,230 B2 4/2015 Yates et al.
9,005,243 B2 4/2015 Stopek et al.
9,016,541 B2 4/2015 Viola et al.
9,016,542 B2 4/2015 Shelton, IV et al.
9,028,494 B2 5/2015 Shelton, IV et al.
9,028,519 B2 5/2015 Yates et al.
9,033,203 B2 5/2015 Woodard, Jr. et al.
9,033,204 B2 5/2015 Shelton, IV et al.
9,044,227 B2 6/2015 Shelton, IV et al.
9,044,228 B2 6/2015 Woodard, Jr. et al.
9,044,229 B2 6/2015 Scheib et al.
9,044,230 B2 6/2015 Morgan et al.
9,050,083 B2 6/2015 Yates et al.
9,050,084 B2 6/2015 Schmid et al.
9,050,120 B2 6/2015 Swarup et al.
9,055,941 B2 6/2015 Schmid et al.
9,055,942 B2 6/2015 Balbierz et al.
9,055,945 B2 6/2015 Miksza et al.
9,060,770 B2 6/2015 Shelton, IV et al.
9,072,515 B2 7/2015 Hall et al.
9,072,523 B2 7/2015 Houser et al.

(56) **References Cited**

U.S. PATENT DOCUMENTS

9,072,535 B2 7/2015 Shelton, IV et al.
9,072,536 B2 7/2015 Shelton, IV et al.
9,078,653 B2 7/2015 Leimbach et al.
9,084,601 B2 7/2015 Moore et al.
9,084,602 B2 7/2015 Gleiman
9,089,326 B2 7/2015 Krumanaker et al.
9,089,330 B2 7/2015 Widenhouse et al.
9,095,339 B2 8/2015 Moore et al.
9,095,362 B2 8/2015 Dachs, II et al.
9,101,358 B2 8/2015 Kerr et al.
9,101,385 B2 8/2015 Shelton, IV et al.
9,107,663 B2 8/2015 Swensgard
9,113,862 B2 8/2015 Morgan et al.
9,113,864 B2 8/2015 Morgan et al.
9,113,865 B2 8/2015 Shelton, IV et al.
9,113,874 B2 8/2015 Shelton, IV et al.
9,113,883 B2 8/2015 Aronhalt et al.
9,113,884 B2 8/2015 Shelton, IV et al.
9,119,657 B2 9/2015 Shelton, IV et al.
9,119,957 B2 9/2015 Gantz et al.
9,125,654 B2 9/2015 Aronhalt et al.
9,125,662 B2 9/2015 Shelton, IV
9,131,835 B2 9/2015 Widenhouse et al.
9,131,940 B2 9/2015 Huitema et al.
9,138,225 B2 9/2015 Huang et al.
9,149,274 B2 10/2015 Spivey et al.
9,168,038 B2 10/2015 Shelton, IV et al.
9,173,978 B2 11/2015 Kelly et al.
9,179,911 B2 11/2015 Morgan et al.
9,179,912 B2 11/2015 Yates et al.
9,186,143 B2 11/2015 Timm et al.
9,186,148 B2 11/2015 Felder et al.
9,198,661 B2 12/2015 Swensgard
9,198,662 B2 12/2015 Barton et al.
9,204,830 B2 12/2015 Zand et al.
9,204,879 B2 12/2015 Shelton, IV
9,204,880 B2 12/2015 Baxter, III et al.
9,211,120 B2 12/2015 Scheib et al.
9,211,122 B2 12/2015 Hagerty et al.
9,216,019 B2 12/2015 Schmid et al.
9,220,500 B2 12/2015 Swayze et al.
9,220,501 B2 12/2015 Baxter, III et al.
9,226,751 B2 1/2016 Shelton, IV et al.
9,232,941 B2 1/2016 Mandakolathur Vasudevan et al.
9,232,945 B2 1/2016 Zingman
9,237,891 B2 1/2016 Shelton, IV
9,241,714 B2 1/2016 Timm et al.
9,271,753 B2 3/2016 Butler et al.
9,271,799 B2 3/2016 Shelton, IV et al.
9,272,406 B2 3/2016 Aronhalt et al.
9,277,919 B2 3/2016 Timmer et al.
9,282,962 B2 3/2016 Schmid et al.
9,282,963 B2 3/2016 Bryant
9,282,966 B2 3/2016 Shelton, IV et al.
9,282,974 B2 3/2016 Shelton, IV
9,289,210 B2 3/2016 Baxter, III et al.
9,289,212 B2 3/2016 Shelton, IV et al.
9,289,225 B2 3/2016 Shelton, IV et al.
9,289,256 B2 3/2016 Shelton, IV et al.
9,295,463 B2 3/2016 Viola et al.
9,295,464 B2 3/2016 Shelton, IV et al.
9,301,752 B2 4/2016 Mandakolathur Vasudevan et al.
9,301,753 B2 4/2016 Aldridge et al.
9,301,755 B2 4/2016 Shelton, IV et al.
9,301,759 B2 4/2016 Spivey et al.
9,307,965 B2 4/2016 Ming et al.
9,307,986 B2 4/2016 Hall et al.
9,307,988 B2 4/2016 Shelton, IV
9,307,989 B2 4/2016 Shelton, IV et al.
9,307,994 B2 4/2016 Gresham et al.
9,314,246 B2 4/2016 Shelton, IV et al.
9,314,247 B2 4/2016 Shelton, IV et al.
9,320,518 B2 4/2016 Henderson et al.
9,320,521 B2 4/2016 Shelton, IV et al.
9,320,523 B2 4/2016 Shelton, IV et al.
9,326,767 B2 5/2016 Koch, Jr. et al.
9,326,768 B2 5/2016 Shelton, IV
9,326,769 B2 5/2016 Shelton, IV et al.
9,326,770 B2 5/2016 Shelton, IV et al.
9,326,771 B2 5/2016 Baxter, III et al.
9,332,974 B2 5/2016 Henderson et al.
9,332,984 B2 5/2016 Weaner et al.
9,332,987 B2 5/2016 Leimbach et al.
9,333,082 B2 5/2016 Wei et al.
9,345,477 B2 5/2016 Anim et al.
9,345,481 B2 5/2016 Hall et al.
9,351,726 B2 5/2016 Leimbach et al.
9,351,727 B2 5/2016 Leimbach et al.
9,351,730 B2 5/2016 Schmid et al.
9,351,734 B2 5/2016 Prior
9,358,003 B2 6/2016 Hall et al.
9,358,005 B2 6/2016 Shelton, IV et al.
9,364,217 B2 6/2016 Kostrzewski et al.
9,364,219 B2 6/2016 Olson et al.
9,364,230 B2 6/2016 Shelton, IV et al.
9,364,233 B2 6/2016 Alexander, III et al.
9,370,358 B2 6/2016 Shelton, IV et al.
9,370,364 B2 6/2016 Smith et al.
9,386,983 B2 7/2016 Swensgard et al.
9,386,984 B2 7/2016 Aronhalt et al.
9,386,985 B2 7/2016 Koch, Jr. et al.
9,386,988 B2 7/2016 Baxter, III et al.
9,393,015 B2 7/2016 Laurent et al.
9,398,911 B2 7/2016 Auld
9,402,626 B2 8/2016 Ortiz et al.
9,408,604 B2 8/2016 Shelton, IV et al.
9,408,606 B2 8/2016 Shelton, IV
9,414,838 B2 8/2016 Shelton, IV et al.
9,427,223 B2 8/2016 Park et al.
9,433,419 B2 9/2016 Gonzalez et al.
9,439,649 B2 9/2016 Shelton, IV et al.
9,439,651 B2 9/2016 Smith et al.
9,451,958 B2 9/2016 Shelton, IV et al.
9,451,980 B2 9/2016 Alfieri
9,463,260 B2 10/2016 Stopek
9,468,438 B2 10/2016 Baber et al.
9,474,519 B2 10/2016 Brustad et al.
9,480,476 B2 11/2016 Aldridge et al.
9,486,132 B2 11/2016 Green
9,486,200 B2 11/2016 Melsheimer et al.
9,486,213 B2 11/2016 Altman et al.
9,486,214 B2 11/2016 Shelton, IV
9,492,154 B2 11/2016 Melsheimer et al.
9,492,167 B2 11/2016 Shelton, IV et al.
9,492,170 B2 11/2016 Bear et al.
9,498,219 B2 11/2016 Moore et al.
9,517,063 B2 12/2016 Swayze et al.
9,517,068 B2 12/2016 Shelton, IV et al.
9,521,996 B2 12/2016 Armstrong
9,522,029 B2 12/2016 Yates et al.
9,549,732 B2 1/2017 Yates et al.
9,554,794 B2 1/2017 Baber et al.
9,561,032 B2 2/2017 Shelton, IV et al.
9,561,038 B2 2/2017 Shelton, IV et al.
9,561,045 B2 2/2017 Hinman et al.
9,566,061 B2 2/2017 Aronhalt et al.
9,572,573 B2 2/2017 Scheib et al.
9,572,574 B2 2/2017 Shelton, IV et al.
9,572,577 B2 2/2017 Lloyd et al.
9,585,550 B2 3/2017 Abel et al.
9,585,657 B2 3/2017 Shelton, IV et al.
9,585,660 B2 3/2017 Laurent et al.
9,592,050 B2 3/2017 Schmid et al.
9,592,052 B2 3/2017 Shelton, IV
9,592,053 B2 3/2017 Shelton, IV et al.
9,597,075 B2 3/2017 Shelton, IV et al.
9,597,080 B2 3/2017 Milliman et al.
9,603,595 B2 3/2017 Shelton, IV et al.
9,603,598 B2 3/2017 Shelton, IV et al.
9,603,991 B2 3/2017 Shelton, IV et al.
9,615,826 B2 4/2017 Shelton, IV et al.
9,615,892 B2 4/2017 Piferi et al.
9,629,623 B2 4/2017 Lytle, IV et al.
9,629,626 B2 4/2017 Soltz et al.

(56) **References Cited**

U.S. PATENT DOCUMENTS

9,629,629	B2	4/2017	Leimbach et al.
9,629,631	B2	4/2017	Nicholas et al.
9,629,814	B2	4/2017	Widenhouse et al.
9,636,112	B2	5/2017	Penna et al.
9,649,110	B2	5/2017	Parihar et al.
9,649,111	B2	5/2017	Shelton, IV et al.
9,655,614	B2	5/2017	Swensgard et al.
9,655,624	B2	5/2017	Shelton, IV et al.
9,662,131	B2	5/2017	Omori et al.
9,675,355	B2	6/2017	Shelton, IV et al.
9,675,372	B2	6/2017	Laurent et al.
9,675,375	B2	6/2017	Houser et al.
9,681,873	B2	6/2017	Smith et al.
9,687,230	B2	6/2017	Leimbach et al.
9,687,231	B2	6/2017	Baxter et al.
9,687,236	B2	6/2017	Leimbach et al.
9,690,362	B2	6/2017	Leimbach et al.
9,693,777	B2	7/2017	Schellin et al.
9,700,309	B2	7/2017	Jaworek et al.
9,700,317	B2	7/2017	Aronhalt et al.
9,700,321	B2	7/2017	Shelton, IV et al.
9,700,326	B2	7/2017	Morriss et al.
9,706,991	B2	7/2017	Hess et al.
9,724,091	B2	8/2017	Shelton, IV et al.
9,724,094	B2	8/2017	Baber et al.
9,724,100	B2	8/2017	Scheib et al.
9,730,692	B2	8/2017	Shelton, IV et al.
9,733,663	B2	8/2017	Leimbach et al.
9,737,301	B2	8/2017	Baber et al.
9,737,335	B2	8/2017	Butler et al.
9,743,928	B2	8/2017	Shelton, IV et al.
9,743,929	B2	8/2017	Leimbach et al.
9,750,499	B2	9/2017	Leimbach et al.
9,750,502	B2	9/2017	Scirica et al.
9,750,503	B2	9/2017	Milliman
9,757,123	B2	9/2017	Giordano et al.
9,757,124	B2	9/2017	Schellin et al.
9,757,128	B2	9/2017	Baber et al.
9,757,130	B2	9/2017	Shelton, IV
9,757,133	B2	9/2017	Latimer et al.
9,770,245	B2	9/2017	Swayze et al.
9,775,608	B2	10/2017	Aronhalt et al.
9,775,613	B2	10/2017	Shelton, IV et al.
9,782,169	B2	10/2017	Kimsey et al.
9,788,834	B2	10/2017	Schmid et al.
9,788,836	B2	10/2017	Overmyer et al.
9,795,382	B2	10/2017	Shelton, IV
9,795,384	B2	10/2017	Weaner et al.
9,801,626	B2	10/2017	Parihar et al.
9,804,618	B2	10/2017	Leimbach et al.
9,808,244	B2	11/2017	Leimbach et al.
9,808,246	B2	11/2017	Shelton, IV et al.
9,808,247	B2	11/2017	Shelton, IV et al.
9,814,460	B2	11/2017	Kimsey et al.
9,820,738	B2	11/2017	Lytle, IV et al.
9,826,976	B2	11/2017	Parihar et al.
9,826,977	B2	11/2017	Leimbach et al.
9,833,236	B2	12/2017	Shelton, IV et al.
9,833,241	B2	12/2017	Huitema et al.
9,839,420	B2	12/2017	Shelton, IV et al.
9,839,421	B2	12/2017	Zerkle et al.
9,839,422	B2	12/2017	Schellin et al.
9,839,423	B2	12/2017	Vendely et al.
9,839,427	B2	12/2017	Swayze et al.
9,839,428	B2	12/2017	Baxter, III et al.
9,844,368	B2	12/2017	Boudreaux et al.
9,844,369	B2	12/2017	Huitema et al.
9,844,372	B2	12/2017	Shelton, IV et al.
9,844,373	B2	12/2017	Swayze et al.
9,844,374	B2	12/2017	Lytle, IV et al.
9,844,375	B2	12/2017	Overmyer et al.
9,848,873	B2	12/2017	Shelton, IV
9,848,875	B2	12/2017	Aronhalt et al.
9,861,359	B2	1/2018	Shelton, IV et al.
9,861,361	B2	1/2018	Aronhalt et al.
9,867,612	B2	1/2018	Parihar et al.
9,867,618	B2	1/2018	Hall et al.
9,872,684	B2	1/2018	Hall et al.
9,877,721	B2	1/2018	Schellin et al.
9,877,722	B2	1/2018	Schellin et al.
9,883,860	B2	2/2018	Leimbach et al.
9,883,861	B2	2/2018	Shelton, IV et al.
9,884,456	B2	2/2018	Schellin et al.
9,888,919	B2	2/2018	Leimbach et al.
9,888,924	B2	2/2018	Ebersole et al.
9,895,148	B2	2/2018	Shelton, IV et al.
9,901,342	B2	2/2018	Shelton, IV et al.
9,907,600	B2	3/2018	Stulen et al.
9,913,642	B2	3/2018	Leimbach et al.
9,913,646	B2	3/2018	Shelton, IV
9,918,704	B2	3/2018	Shelton, IV et al.
9,924,961	B2	3/2018	Shelton, IV et al.
9,931,118	B2	4/2018	Shelton, IV et al.
9,943,309	B2	4/2018	Shelton, IV et al.
9,968,355	B2	5/2018	Shelton, IV et al.
9,974,529	B2	5/2018	Shelton, IV et al.
9,980,713	B2	5/2018	Aronhalt et al.
9,987,000	B2	6/2018	Shelton, IV et al.
9,993,248	B2	6/2018	Shelton, IV et al.
9,993,258	B2	6/2018	Shelton, IV et al.
9,999,408	B2	6/2018	Boudreaux et al.
10,004,497	B2	6/2018	Overmyer et al.
10,004,498	B2	6/2018	Morgan et al.
10,004,501	B2	6/2018	Shelton, IV et al.
10,010,322	B2	7/2018	Shelton, IV et al.
10,010,324	B2	7/2018	Huitema et al.
10,013,049	B2	7/2018	Leimbach et al.
10,016,199	B2	7/2018	Baber et al.
10,028,761	B2	7/2018	Leimbach et al.
10,039,529	B2	8/2018	Kerr et al.
10,045,769	B2	8/2018	Aronhalt et al.
10,045,776	B2	8/2018	Shelton, IV et al.
10,045,779	B2	8/2018	Savage et al.
10,052,044	B2	8/2018	Shelton, IV et al.
10,052,099	B2	8/2018	Morgan et al.
10,052,100	B2	8/2018	Morgan et al.
10,052,102	B2	8/2018	Baxter, III et al.
10,058,963	B2	8/2018	Shelton, IV et al.
10,064,621	B2	9/2018	Kerr et al.
10,071,452	B2	9/2018	Shelton, IV et al.
10,085,748	B2	10/2018	Morgan et al.
10,111,679	B2	10/2018	Baber et al.
10,117,649	B2	11/2018	Baxter, III et al.
10,123,798	B2	11/2018	Baxter, III et al.
10,130,352	B2	11/2018	Widenhouse et al.
10,130,359	B2	11/2018	Hess et al.
10,130,363	B2	11/2018	Huitema et al.
10,130,366	B2	11/2018	Shelton, IV et al.
10,135,242	B2	11/2018	Baber et al.
2001/0025183	A1	9/2001	Shahidi
2002/0095175	A1	7/2002	Brock et al.
2002/0103494	A1	8/2002	Pacey
2002/0117534	A1	8/2002	Green et al.
2003/0190584	A1	10/2003	Heasley
2004/0054353	A1	3/2004	Taylor
2004/0098040	A1	5/2004	Taniguchi et al.
2004/0108357	A1	6/2004	Milliman et al.
2004/0147909	A1	7/2004	Johnston et al.
2004/0158230	A1	8/2004	Hunn et al.
2004/0158261	A1	8/2004	Vu
2004/0164123	A1	8/2004	Racenet et al.
2004/0167572	A1	8/2004	Roth et al.
2004/0193189	A1	9/2004	Kortenbach et al.
2004/0199181	A1	10/2004	Knodel et al.
2004/0222268	A1	11/2004	Bilotti et al.
2004/0232201	A1	11/2004	Wenchell et al.
2004/0236352	A1	11/2004	Wang et al.
2004/0243147	A1	12/2004	Lipow
2004/0243151	A1	12/2004	Demmy et al.
2004/0254566	A1	12/2004	Plicchi et al.
2004/0260315	A1	12/2004	Dell et al.
2004/0267310	A1	12/2004	Racenet et al.
2005/0033226	A1	2/2005	Kim
2005/0051163	A1	3/2005	Deem et al.

(56) **References Cited**

U.S. PATENT DOCUMENTS

2005/0059997	A1	3/2005	Bauman et al.
2005/0070929	A1	3/2005	Dalessandro et al.
2005/0085693	A1	4/2005	Belson et al.
2005/0131390	A1	6/2005	Heinrich et al.
2005/0131457	A1	6/2005	Douglas et al.
2005/0143756	A1	6/2005	Jankowski
2005/0143759	A1	6/2005	Kelly
2005/0154406	A1	7/2005	Bombard et al.
2005/0177181	A1	8/2005	Kagan et al.
2005/0182298	A1	8/2005	Ikeda et al.
2005/0184121	A1	8/2005	Heinrich
2005/0203550	A1	9/2005	Laufer et al.
2005/0216055	A1	9/2005	Scirica et al.
2005/0236459	A1	10/2005	Gresham
2005/0245965	A1	11/2005	Orban, III et al.
2005/0246881	A1	11/2005	Kelly et al.
2005/0256452	A1	11/2005	DeMarchi et al.
2005/0263563	A1	12/2005	Racenet et al.
2005/0283188	A1	12/2005	Loshakove et al.
2006/0020258	A1	1/2006	Strauss et al.
2006/0025812	A1	2/2006	Shelton
2006/0041188	A1	2/2006	Dirusso et al.
2006/0049229	A1	3/2006	Milliman et al.
2006/0052669	A1	3/2006	Hart
2006/0052825	A1	3/2006	Ransick et al.
2006/0100643	A1	5/2006	Laufer et al.
2006/0149306	A1	7/2006	Hart et al.
2006/0161050	A1	7/2006	Butler et al.
2006/0161185	A1	7/2006	Saadat et al.
2006/0173470	A1	8/2006	Oray et al.
2006/0180634	A1	8/2006	Shelton et al.
2006/0185682	A1	8/2006	Marczyk
2006/0201989	A1	9/2006	Ojeda
2006/0211919	A1	9/2006	Wilk
2006/0235368	A1	10/2006	Oz
2006/0241651	A1	10/2006	Wilk
2006/0252993	A1	11/2006	Freed et al.
2006/0258904	A1	11/2006	Stefanchik et al.
2006/0259073	A1	11/2006	Miyamoto et al.
2006/0271102	A1	11/2006	Bosshard et al.
2006/0289602	A1	12/2006	Wales et al.
2007/0027468	A1	2/2007	Wales et al.
2007/0043387	A1	2/2007	Vargas et al.
2007/0073341	A1	3/2007	Smith et al.
2007/0078484	A1	4/2007	Talarico et al.
2007/0080188	A1	4/2007	Spence et al.
2007/0084897	A1	4/2007	Shelton et al.
2007/0093869	A1	4/2007	Bloom et al.
2007/0102472	A1	5/2007	Shelton
2007/0106317	A1	5/2007	Shelton et al.
2007/0135803	A1	6/2007	Belson
2007/0170225	A1	7/2007	Shelton et al.
2007/0173687	A1	7/2007	Shima et al.
2007/0173813	A1	7/2007	Odom
2007/0175950	A1	8/2007	Shelton et al.
2007/0175951	A1	8/2007	Shelton et al.
2007/0175955	A1	8/2007	Shelton et al.
2007/0194079	A1	8/2007	Hueil et al.
2007/0194082	A1	8/2007	Morgan et al.
2007/0203510	A1	8/2007	Bettuchi
2007/0208359	A1	9/2007	Hoffman
2007/0225562	A1	9/2007	Spivey et al.
2007/0244471	A1	10/2007	Malackowski
2007/0246505	A1	10/2007	Pace-Floridia et al.
2007/0276409	A1	11/2007	Ortiz et al.
2008/0029570	A1	2/2008	Shelton et al.
2008/0029573	A1	2/2008	Shelton et al.
2008/0029574	A1	2/2008	Shelton et al.
2008/0029575	A1	2/2008	Shelton et al.
2008/0078802	A1	4/2008	Hess et al.
2008/0082114	A1	4/2008	McKenna et al.
2008/0082125	A1	4/2008	Murray et al.
2008/0082126	A1	4/2008	Murray et al.
2008/0140115	A1	6/2008	Stopek
2008/0154299	A1	6/2008	Livneh
2008/0154335	A1	6/2008	Thrope et al.
2008/0169328	A1	7/2008	Shelton
2008/0169332	A1	7/2008	Shelton et al.
2008/0169333	A1	7/2008	Shelton et al.
2008/0172087	A1	7/2008	Fuchs et al.
2008/0183193	A1	7/2008	Omori et al.
2008/0190989	A1	8/2008	Crews et al.
2008/0197167	A1	8/2008	Viola et al.
2008/0200933	A1	8/2008	Bakos et al.
2008/0242939	A1	10/2008	Johnston
2008/0255413	A1	10/2008	Zemlok et al.
2008/0262654	A1*	10/2008	Omori A61B 90/96 700/245
2008/0294179	A1	11/2008	Balbierz et al.
2008/0296346	A1	12/2008	Shelton, IV et al.
2008/0308602	A1	12/2008	Timm et al.
2008/0308603	A1	12/2008	Shelton et al.
2009/0001121	A1	1/2009	Hess et al.
2009/0001130	A1	1/2009	Hess et al.
2009/0005809	A1	1/2009	Hess et al.
2009/0012534	A1	1/2009	Madhani et al.
2009/0078736	A1	3/2009	Van Lue
2009/0090763	A1	4/2009	Zemlok et al.
2009/0149871	A9	6/2009	Kagan et al.
2009/0188964	A1	7/2009	Orlov
2009/0198272	A1	8/2009	Kerver et al.
2009/0204108	A1	8/2009	Steffen
2009/0206125	A1	8/2009	Huitema et al.
2009/0206126	A1	8/2009	Huitema et al.
2009/0206131	A1	8/2009	Weisenburgh, II et al.
2009/0206133	A1	8/2009	Morgan et al.
2009/0206137	A1	8/2009	Hall et al.
2009/0206139	A1	8/2009	Hall et al.
2009/0206141	A1	8/2009	Huitema et al.
2009/0206142	A1	8/2009	Huitema et al.
2009/0242610	A1	10/2009	Shelton, IV et al.
2009/0255974	A1	10/2009	Viola
2009/0292283	A1	11/2009	Odom
2009/0308907	A1	12/2009	Nalagatla et al.
2010/0069942	A1	3/2010	Shelton, IV
2010/0133317	A1	6/2010	Shelton, IV et al.
2010/0147921	A1	6/2010	Olson
2010/0147922	A1	6/2010	Olson
2010/0193566	A1	8/2010	Scheib et al.
2010/0222901	A1	9/2010	Swayze et al.
2010/0292540	A1	11/2010	Hess et al.
2010/0312261	A1	12/2010	Suzuki et al.
2011/0006101	A1	1/2011	Hall et al.
2011/0011916	A1	1/2011	Levine
2011/0017801	A1*	1/2011	Zemlok A61B 17/07207 227/175.1
2011/0022032	A1	1/2011	Zemlok et al.
2011/0024477	A1	2/2011	Hall
2011/0024478	A1	2/2011	Shelton, IV
2011/0036891	A1	2/2011	Zemlok et al.
2011/0060363	A1	3/2011	Hess et al.
2011/0071356	A1	3/2011	Edwards
2011/0087276	A1	4/2011	Bedi et al.
2011/0114697	A1	5/2011	Baxter, III et al.
2011/0118706	A1	5/2011	Gingras et al.
2011/0125176	A1	5/2011	Yates et al.
2011/0147433	A1	6/2011	Shelton, IV et al.
2011/0163146	A1	7/2011	Ortiz et al.
2011/0172495	A1	7/2011	Armstrong
2011/0174861	A1	7/2011	Shelton, IV et al.
2011/0192882	A1	8/2011	Hess et al.
2011/0275901	A1	11/2011	Shelton, IV
2011/0276083	A1	11/2011	Shelton, IV et al.
2011/0278343	A1	11/2011	Knodel et al.
2011/0290856	A1	12/2011	Shelton, IV et al.
2011/0295295	A1	12/2011	Shelton, IV et al.
2012/0029272	A1	2/2012	Shelton, IV et al.
2012/0074200	A1	3/2012	Schmid et al.
2012/0080336	A1	4/2012	Shelton, IV et al.
2012/0080340	A1	4/2012	Shelton, IV et al.
2012/0080344	A1	4/2012	Shelton, IV
2012/0080478	A1	4/2012	Morgan et al.
2012/0080498	A1	4/2012	Shelton, IV et al.
2012/0175398	A1	7/2012	Sandborn et al.

(56) **References Cited**

U.S. PATENT DOCUMENTS

2012/0184951 A1* 7/2012 Viola A61B 17/00234 606/34
2012/0199602 A1 8/2012 Jordan et al.
2012/0234895 A1 9/2012 O'Connor et al.
2012/0234897 A1 9/2012 Shelton, IV et al.
2012/0248169 A1 10/2012 Widenhouse et al.
2012/0277780 A1* 11/2012 Smith A61B 17/32009 606/169
2012/0283707 A1 11/2012 Giordano et al.
2012/0289979 A1 11/2012 Eskaros et al.
2012/0292367 A1 11/2012 Morgan et al.
2012/0298722 A1 11/2012 Hess et al.
2013/0020375 A1 1/2013 Shelton, IV et al.
2013/0020376 A1 1/2013 Shelton, IV et al.
2013/0023861 A1 1/2013 Shelton, IV et al.
2013/0026208 A1 1/2013 Shelton, IV et al.
2013/0026209 A1 1/2013 Mozdzierz et al.
2013/0026210 A1 1/2013 Shelton, IV et al.
2013/0030253 A1 1/2013 Titus
2013/0085339 A1 4/2013 Jaworek et al.
2013/0087597 A1 4/2013 Shelton, IV et al.
2013/0098970 A1 4/2013 Racenet et al.
2013/0116669 A1 5/2013 Shelton, IV et al.
2013/0153636 A1 6/2013 Shelton, IV et al.
2013/0153641 A1 6/2013 Shelton, IV et al.
2013/0175317 A1 7/2013 Yates et al.
2013/0181033 A1 7/2013 Shelton, IV et al.
2013/0181034 A1 7/2013 Shelton, IV et al.
2013/0190759 A1* 7/2013 Waaler H01M 2/1066 606/52
2013/0214030 A1 8/2013 Aronhalt et al.
2013/0231667 A1 9/2013 Taylor et al.
2013/0233906 A1 9/2013 Hess et al.
2013/0256373 A1 10/2013 Schmid et al.
2013/0256379 A1 10/2013 Schmid et al.
2013/0256380 A1 10/2013 Schmid et al.
2013/0270322 A1 10/2013 Scheib et al.
2013/0324981 A1 12/2013 Smith et al.
2013/0324982 A1 12/2013 Smith et al.
2013/0331867 A1 12/2013 Reeser et al.
2013/0334283 A1 12/2013 Swayze et al.
2013/0334284 A1 12/2013 Swayze et al.
2013/0334285 A1 12/2013 Swayze et al.
2013/0341374 A1 12/2013 Shelton, IV et al.
2014/0001231 A1 1/2014 Shelton, IV et al.
2014/0001234 A1 1/2014 Shelton, IV et al.
2014/0005640 A1 1/2014 Shelton, IV et al.
2014/0005678 A1 1/2014 Shelton, IV et al.
2014/0005718 A1 1/2014 Shelton, IV et al.
2014/0014704 A1 1/2014 Onukuri et al.
2014/0014705 A1 1/2014 Baxter, III
2014/0107640 A1 4/2014 Yates et al.
2014/0151433 A1 6/2014 Shelton, IV et al.
2014/0166724 A1 6/2014 Schellin et al.
2014/0166725 A1 6/2014 Schellin et al.
2014/0166726 A1 6/2014 Schellin et al.
2014/0171966 A1 6/2014 Giordano et al.
2014/0175152 A1 6/2014 Hess et al.
2014/0200561 A1 7/2014 Ingmanson et al.
2014/0224857 A1 8/2014 Schmid
2014/0243865 A1 8/2014 Swayze et al.
2014/0246475 A1 9/2014 Hall et al.
2014/0249557 A1 9/2014 Koch, Jr. et al.
2014/0263541 A1 9/2014 Leimbach et al.
2014/0263552 A1 9/2014 Hall et al.
2014/0263554 A1 9/2014 Leimbach et al.
2014/0284371 A1 9/2014 Morgan et al.
2014/0291378 A1 10/2014 Shelton, IV et al.
2014/0291379 A1 10/2014 Schellin et al.
2014/0291383 A1 10/2014 Spivey et al.
2014/0299648 A1 10/2014 Shelton, IV et al.
2014/0303645 A1 10/2014 Morgan et al.
2014/0305990 A1 10/2014 Shelton, IV et al.
2014/0305991 A1 10/2014 Parihar et al.
2014/0309666 A1 10/2014 Shelton, IV et al.
2015/0053737 A1 2/2015 Leimbach et al.
2015/0272557 A1 10/2015 Overmyer et al.
2015/0272571 A1 10/2015 Leimbach et al.
2015/0272580 A1 10/2015 Leimbach et al.
2015/0272582 A1 10/2015 Leimbach et al.
2015/0280384 A1 10/2015 Leimbach et al.
2015/0282810 A1 10/2015 Shelton, IV et al.
2015/0289873 A1 10/2015 Shelton, IV et al.
2015/0289874 A1 10/2015 Leimbach et al.
2015/0297219 A1 10/2015 Shelton, IV et al.
2015/0297222 A1 10/2015 Huitema et al.
2015/0297223 A1 10/2015 Huitema et al.
2015/0297225 A1 10/2015 Huitema et al.
2015/0297228 A1 10/2015 Huitema et al.
2015/0297229 A1 10/2015 Schellin et al.
2015/0297232 A1 10/2015 Huitema et al.
2015/0297233 A1 10/2015 Huitema et al.
2015/0297234 A1 10/2015 Schellin et al.
2015/0297235 A1 10/2015 Harris et al.
2015/0297236 A1 10/2015 Harris et al.
2015/0313594 A1 11/2015 Shelton, IV et al.
2015/0351758 A1 12/2015 Shelton, IV et al.
2016/0066913 A1 3/2016 Swayze et al.
2016/0089146 A1 3/2016 Harris et al.
2016/0113653 A1 4/2016 Zingman
2016/0120544 A1 5/2016 Shelton, IV et al.
2016/0135796 A1 5/2016 Hundertmark et al.
2016/0143637 A1 5/2016 Nering et al.
2016/0174969 A1 6/2016 Kerr et al.
2016/0174972 A1 6/2016 Shelton, IV et al.
2016/0249909 A1 9/2016 Shelton, IV et al.
2016/0249910 A1 9/2016 Shelton, IV et al.
2016/0249915 A1 9/2016 Beckman et al.
2016/0249916 A1 9/2016 Shelton, IV et al.
2016/0249917 A1 9/2016 Beckman et al.
2016/0249918 A1 9/2016 Shelton, IV et al.
2016/0249927 A1 9/2016 Beckman et al.
2016/0256071 A1 9/2016 Shelton, IV et al.
2016/0256154 A1 9/2016 Shelton, IV et al.
2016/0256160 A1 9/2016 Shelton, IV et al.
2016/0256161 A1 9/2016 Overmyer et al.
2016/0256185 A1 9/2016 Shelton, IV et al.
2016/0278775 A1 9/2016 Shelton, IV et al.
2016/0278778 A1 9/2016 Shelton, IV et al.
2016/0367245 A1 12/2016 Wise et al.
2016/0367246 A1 12/2016 Baxter, III et al.
2016/0367254 A1 12/2016 Baxter, III et al.
2016/0367255 A1 12/2016 Wise et al.
2016/0367256 A1 12/2016 Hensel et al.
2017/0007229 A1 1/2017 Widenhouse et al.
2017/0027571 A1 2/2017 Nalagatla et al.
2017/0027572 A1 2/2017 Nalagatla et al.
2017/0027573 A1 2/2017 Nalagatla et al.
2017/0027574 A1 2/2017 Nalagatla et al.
2017/0055986 A1 3/2017 Harris et al.
2017/0056000 A1 3/2017 Nalagatla et al.
2017/0119386 A1 5/2017 Scheib et al.
2017/0119387 A1 5/2017 Dalessandro et al.
2017/0119389 A1 5/2017 Turner et al.
2017/0119390 A1 5/2017 Schellin et al.
2017/0119392 A1 5/2017 Shelton, IV et al.
2017/0189018 A1 7/2017 Harris et al.
2017/0189019 A1 7/2017 Harris et al.
2017/0189020 A1 7/2017 Harris et al.
2017/0224330 A1 8/2017 Worthington et al.
2017/0224331 A1 8/2017 Worthington et al.
2017/0224332 A1 8/2017 Hunter et al.
2017/0224333 A1 8/2017 Hunter et al.
2017/0224334 A1 8/2017 Worthington et al.
2017/0224335 A1 8/2017 Weaner et al.
2017/0224336 A1 8/2017 Hunter et al.
2017/0224342 A1 8/2017 Worthington et al.
2017/0224343 A1 8/2017 Baxter, III et al.
2017/0231623 A1 8/2017 Shelton, IV et al.
2017/0231626 A1 8/2017 Shelton, IV et al.
2017/0231627 A1 8/2017 Shelton, IV et al.
2017/0231628 A1 8/2017 Shelton, IV et al.
2017/0258540 A1 9/2017 Blatt
2017/0281155 A1 10/2017 Shelton, IV et al.

(56) **References Cited**

U.S. PATENT DOCUMENTS

2017/0281161	A1	10/2017	Shelton, IV et al.
2017/0281162	A1	10/2017	Shelton, IV et al.
2017/0281164	A1	10/2017	Harris et al.
2017/0281165	A1	10/2017	Harris et al.
2017/0281166	A1	10/2017	Morgan et al.
2017/0281167	A1	10/2017	Shelton, IV et al.
2017/0281168	A1	10/2017	Shelton, IV et al.
2017/0281169	A1	10/2017	Harris et al.
2017/0281170	A1	10/2017	Shelton, IV et al.
2017/0281171	A1	10/2017	Shelton, IV et al.
2017/0281172	A1	10/2017	Shelton, IV et al.
2017/0281173	A1	10/2017	Shelton, IV et al.
2017/0281174	A1	10/2017	Harris et al.
2017/0281177	A1	10/2017	Harris et al.
2017/0281178	A1	10/2017	Shelton, IV et al.
2017/0281179	A1	10/2017	Shelton, IV et al.
2017/0281180	A1	10/2017	Morgan et al.
2017/0281183	A1	10/2017	Miller et al.
2017/0281184	A1	10/2017	Shelton, IV et al.
2017/0281185	A1	10/2017	Miller et al.
2017/0281186	A1	10/2017	Shelton, IV et al.
2017/0281187	A1	10/2017	Shelton, IV et al.
2017/0281188	A1	10/2017	Shelton, IV et al.
2017/0281189	A1	10/2017	Nalagatla et al.
2018/0325508	A1	11/2018	Aronhalt et al.

FOREIGN PATENT DOCUMENTS

AU	2012200178	B2	7/2013
CA	2458946	A1	3/2003
CA	2477181	A1	4/2004
CA	2512960	A1	1/2006
CA	2514274	A1	1/2006
CA	2639177	A1	2/2009
CN	1163558	A	10/1997
CN	2488482	Y	5/2002
CN	1523725	A	8/2004
CN	1545154	A	11/2004
CN	2686539	Y	3/2005
CN	1634601	A	7/2005
CN	2716900	Y	8/2005
CN	2738962	Y	11/2005
CN	1726874	A	2/2006
CN	1868411	A	11/2006
CN	1915180	A	2/2007
CN	2868212	Y	2/2007
CN	1960679	A	5/2007
CN	101011286	A	8/2007
CN	101095621	A	1/2008
CN	101675898	A	3/2010
CN	101683280	A	3/2010
CN	102188270	A	9/2011
CN	101534723	B	1/2012
CN	202313540	U	7/2012
CN	101541251	A	11/2012
CN	101507633	B	2/2013
CN	101023879	B	3/2013
CN	101401736	B	6/2013
DE	273689	C	5/1914
DE	1775926	A	1/1972
DE	3036217	A1	4/1982
DE	3212828	A1	11/1982
DE	3210466	A1	9/1983
DE	3709067	A1	9/1988
DE	9412228	U1	9/1994
DE	19509116	A1	9/1996
DE	19851291	A1	1/2000
DE	19924311	A1	11/2000
DE	69328576	T2	1/2001
DE	20016423	U1	2/2001
DE	10052679	A1	5/2001
DE	20112837	U1	10/2001
DE	20121753	U1	4/2003
DE	10314827	B3	4/2004
DE	10314072	A1	10/2004
DE	202007003114	U1	6/2007
EP	0000756	A1	2/1979
EP	0122046	A1	10/1984
EP	0070230	B1	4/1985
EP	0156774	A2	10/1985
EP	0033548	B1	5/1986
EP	0077262	B1	8/1986
EP	0129442	B1	11/1987
EP	0276104	A2	7/1988
EP	0178940	B1	1/1991
EP	0178941	B1	1/1991
EP	0169044	B1	6/1991
EP	0248844	B1	1/1993
EP	0539762	A1	5/1993
EP	0545029	A1	6/1993
EP	0548998	A1	6/1993
EP	0379721	B1	9/1993
EP	0277959	B1	10/1993
EP	0233940	B1	11/1993
EP	0261230	B1	11/1993
EP	0324636	B1	3/1994
EP	0591946	A1	4/1994
EP	0593920	A1	4/1994
EP	0594148	A1	4/1994
EP	0427949	B1	6/1994
EP	0523174	B1	6/1994
EP	0600182	A2	6/1994
EP	0310431	B1	11/1994
EP	0375302	B1	11/1994
EP	0376562	B1	11/1994
EP	0630612	A1	12/1994
EP	0630614	A1	12/1994
EP	0634144	A1	1/1995
EP	0639349	A2	2/1995
EP	0646356	A2	4/1995
EP	0646357	A1	4/1995
EP	0505036	B1	5/1995
EP	0653189	A2	5/1995
EP	0669104	A1	8/1995
EP	0387980	B1	10/1995
EP	0511470	B1	10/1995
EP	0674876	A2	10/1995
EP	0676173	B1	10/1995
EP	0679367	A2	11/1995
EP	0392547	B1	12/1995
EP	0685204	A1	12/1995
EP	0364216	B1	1/1996
EP	0699418	A1	3/1996
EP	0702937	A1	3/1996
EP	0488768	B1	4/1996
EP	0705571	A1	4/1996
EP	0528478	B1	5/1996
EP	0711611	A2	5/1996
EP	0541987	B1	7/1996
EP	0667119	B1	7/1996
EP	0737446	A1	10/1996
EP	0741996	B1	11/1996
EP	0748614	A1	12/1996
EP	0708618	B1	3/1997
EP	0770355	A1	5/1997
EP	0503662	B1	6/1997
EP	0447121	B1	7/1997
EP	0621009	B1	7/1997
EP	0625077	B1	7/1997
EP	0633749	B1	8/1997
EP	0710090	B1	8/1997
EP	0578425	B1	9/1997
EP	0625335	B1	11/1997
EP	0552423	B1	1/1998
EP	0592244	B1	1/1998
EP	0648476	B1	1/1998
EP	0649290	B1	3/1998
EP	0598618	B1	9/1998
EP	0678007	B1	9/1998
EP	0869104	A1	10/1998
EP	0603472	B1	11/1998
EP	0605351	B1	11/1998
EP	0878169	A1	11/1998
EP	0879742	A1	11/1998

(56) **References Cited**

FOREIGN PATENT DOCUMENTS

EP	0695144	B1	12/1998
EP	0722296	B1	12/1998
EP	0760230	B1	2/1999
EP	0623316	B1	3/1999
EP	0650701	B1	3/1999
EP	0537572	B1	6/1999
EP	0923907	A1	6/1999
EP	0640317	B1	9/1999
EP	0843906	B1	3/2000
EP	0552050	B1	5/2000
EP	0833592	B1	5/2000
EP	0832605	B1	6/2000
EP	0484677	B2	7/2000
EP	0830094	B1	9/2000
EP	1034747	A1	9/2000
EP	1034748	A1	9/2000
EP	0694290	B1	11/2000
EP	1050278	A1	11/2000
EP	1053719	A1	11/2000
EP	1053720	A1	11/2000
EP	1055399	A1	11/2000
EP	1055400	A1	11/2000
EP	1058177	A1	12/2000
EP	1080694	A1	3/2001
EP	1090592	A1	4/2001
EP	1095627	A1	5/2001
EP	0806914	B1	9/2001
EP	0768840	B1	12/2001
EP	0908152	B1	1/2002
EP	0717959	B1	2/2002
EP	0872213	B1	5/2002
EP	0862386	B1	6/2002
EP	0949886	B1	9/2002
EP	1238634	A2	9/2002
EP	0858295	B1	12/2002
EP	0656188	B1	1/2003
EP	0717960	B1	2/2003
EP	1284120	A1	2/2003
EP	1287788	A1	3/2003
EP	0717966	B1	4/2003
EP	0869742	B1	5/2003
EP	0829235	B1	6/2003
EP	0887046	B1	7/2003
EP	1323384	A2	7/2003
EP	0852480	B1	8/2003
EP	0891154	B1	9/2003
EP	0813843	B1	10/2003
EP	0873089	B1	10/2003
EP	0856326	B1	11/2003
EP	1374788	A1	1/2004
EP	0814712	B1	2/2004
EP	1402837	A1	3/2004
EP	0705570	B1	4/2004
EP	0959784	B1	4/2004
EP	1407719	A2	4/2004
EP	1086713	B1	5/2004
EP	0996378	B1	6/2004
EP	1426012	A1	6/2004
EP	0833593	B2	7/2004
EP	1442694	A1	8/2004
EP	0888749	B1	9/2004
EP	0959786	B1	9/2004
EP	1459695	A1	9/2004
EP	1254636	B1	10/2004
EP	1473819	A1	11/2004
EP	1477119	A1	11/2004
EP	1479345	A1	11/2004
EP	1479347	A1	11/2004
EP	1479348	A1	11/2004
EP	0754437	B2	12/2004
EP	1025807	B1	12/2004
EP	1001710	B1	1/2005
EP	1496805	A2	1/2005
EP	1256318	B1	2/2005
EP	1520521	A1	4/2005
EP	1520522	A1	4/2005
EP	1520523	A1	4/2005
EP	1520525	A1	4/2005
EP	1522264	A1	4/2005
EP	1523942	A2	4/2005
EP	1550408	A1	7/2005
EP	1557129	A1	7/2005
EP	1064883	B1	8/2005
EP	1067876	B1	8/2005
EP	0870473	B1	9/2005
EP	1157666	B1	9/2005
EP	0880338	B1	10/2005
EP	1158917	B1	11/2005
EP	1344498	B1	11/2005
EP	0906764	B1	12/2005
EP	1330989	B1	12/2005
EP	0771176	B2	1/2006
EP	1621138	A2	2/2006
EP	1621139	A2	2/2006
EP	1621141	A2	2/2006
EP	1621145	A2	2/2006
EP	1621151	A2	2/2006
EP	1034746	B1	3/2006
EP	1201196	B1	3/2006
EP	1632191	A2	3/2006
EP	1647231	A1	4/2006
EP	1065981	B1	5/2006
EP	1082944	B1	5/2006
EP	1230899	B1	5/2006
EP	1652481	A2	5/2006
EP	1382303	B1	6/2006
EP	1253866	B1	7/2006
EP	1032318	B1	8/2006
EP	1045672	B1	8/2006
EP	1617768	B1	8/2006
EP	1693015	A2	8/2006
EP	1400214	B1	9/2006
EP	1702567	A2	9/2006
EP	1129665	B1	11/2006
EP	1400206	B1	11/2006
EP	1721568	A1	11/2006
EP	1256317	B1	12/2006
EP	1285633	B1	12/2006
EP	1728473	A1	12/2006
EP	1736105	A1	12/2006
EP	1011494	B1	1/2007
EP	1479346	B1	1/2007
EP	1484024	B1	1/2007
EP	1749485	A1	2/2007
EP	1754445	A2	2/2007
EP	1759812	A1	3/2007
EP	1767157	A1	3/2007
EP	1767163	A1	3/2007
EP	1563792	B1	4/2007
EP	1769756	A1	4/2007
EP	1769758	A1	4/2007
EP	1581128	B1	5/2007
EP	1780825	A1	5/2007
EP	1785097	A2	5/2007
EP	1790293	A2	5/2007
EP	1790294	A1	5/2007
EP	1563793	B1	6/2007
EP	1800610	A1	6/2007
EP	1300117	B1	8/2007
EP	1813199	A1	8/2007
EP	1813200	A2	8/2007
EP	1813201	A1	8/2007
EP	1813202	A1	8/2007
EP	1813203	A2	8/2007
EP	1813207	A1	8/2007
EP	1813209	A1	8/2007
EP	1815950	A1	8/2007
EP	1330991	B1	9/2007
EP	1837041	A1	9/2007
EP	0922435	B1	10/2007
EP	1487359	B1	10/2007
EP	1599146	B1	10/2007
EP	1839596	A1	10/2007
EP	1679096	B1	11/2007

(56) **References Cited**

FOREIGN PATENT DOCUMENTS

EP	1857057	A2	11/2007
EP	1402821	B1	12/2007
EP	1872727	A1	1/2008
EP	1550410	B1	2/2008
EP	1671593	B1	2/2008
EP	1897502	A1	3/2008
EP	1611856	B1	4/2008
EP	1908417	A2	4/2008
EP	1917929	A1	5/2008
EP	1330201	B1	6/2008
EP	1702568	B1	7/2008
EP	1943955	A2	7/2008
EP	1943957	A2	7/2008
EP	1943959	A1	7/2008
EP	1943962	A2	7/2008
EP	1943964	A1	7/2008
EP	1943976	A2	7/2008
EP	1593337	B1	8/2008
EP	1970014	A1	9/2008
EP	1974678	A2	10/2008
EP	1980213	A2	10/2008
EP	1759645	B1	11/2008
EP	1987780	A2	11/2008
EP	1990014	A2	11/2008
EP	1552795	B1	12/2008
EP	1693008	B1	12/2008
EP	1759640	B1	12/2008
EP	1997439	A2	12/2008
EP	2000102	A2	12/2008
EP	2005894	A2	12/2008
EP	2005901	A1	12/2008
EP	2008595	A2	12/2008
EP	1736104	B1	3/2009
EP	1749486	B1	3/2009
EP	1782743	B1	3/2009
EP	2039302	A2	3/2009
EP	2039308	A2	3/2009
EP	2039316	A2	3/2009
EP	1721576	B1	4/2009
EP	1733686	B1	4/2009
EP	2044890	A1	4/2009
EP	2055243	A2	5/2009
EP	1550409	B1	6/2009
EP	1550413	B1	6/2009
EP	1719461	B1	6/2009
EP	1834594	B1	6/2009
EP	1709911	B1	7/2009
EP	2077093	A2	7/2009
EP	1745748	B1	8/2009
EP	2090231	A1	8/2009
EP	2090237	A1	8/2009
EP	2090241	A1	8/2009
EP	2090245	A1	8/2009
EP	2090254	A1	8/2009
EP	2090256	A2	8/2009
EP	2095777	A2	9/2009
EP	2098170	A2	9/2009
EP	2110082	A1	10/2009
EP	2110083	A2	10/2009
EP	2110084	A2	10/2009
EP	2111803	A2	10/2009
EP	1813208	B1	11/2009
EP	1908426	B1	11/2009
EP	2116195	A1	11/2009
EP	2116197	A2	11/2009
EP	1607050	B1	12/2009
EP	1762190	B8	12/2009
EP	1815804	B1	12/2009
EP	1875870	B1	12/2009
EP	1878395	B1	1/2010
EP	2151204	A1	2/2010
EP	1813211	B1	3/2010
EP	2165656	A2	3/2010
EP	2165660	A2	3/2010
EP	1566150	B1	4/2010
EP	1813206	B1	4/2010
EP	1769754	B1	6/2010
EP	1854416	B1	6/2010
EP	1911408	B1	6/2010
EP	2198787	A1	6/2010
EP	1647286	B1	9/2010
EP	1825821	B1	9/2010
EP	1535565	B1	10/2010
EP	1702570	B1	10/2010
EP	1785098	B1	10/2010
EP	2005896	B1	10/2010
EP	2030578	B1	11/2010
EP	2036505	B1	11/2010
EP	2245993	A2	11/2010
EP	2253280	A1	11/2010
EP	1627605	B1	12/2010
EP	2027811	B1	12/2010
EP	2130498	B1	12/2010
EP	2263568	A2	12/2010
EP	1994890	B1	1/2011
EP	2005900	B1	1/2011
EP	2283780	A2	2/2011
EP	2286738	A2	2/2011
EP	1690502	B1	3/2011
EP	2292153	A1	3/2011
EP	1769755	B1	4/2011
EP	2090240	B1	4/2011
EP	2305135	A1	4/2011
EP	2308388	A1	4/2011
EP	2314254	A2	4/2011
EP	2316345	A1	5/2011
EP	2316366	A2	5/2011
EP	1813205	B1	6/2011
EP	2090243	B1	6/2011
EP	2329773	A1	6/2011
EP	2090239	B1	7/2011
EP	2340771	A2	7/2011
EP	1728475	B1	8/2011
EP	2353545	A1	8/2011
EP	2361562	A1	8/2011
EP	1836986	B1	11/2011
EP	1908414	B1	11/2011
EP	2153781	B1	11/2011
EP	2389928	A2	11/2011
EP	1847225	B1	12/2011
EP	2399538	A2	12/2011
EP	1785102	B1	1/2012
EP	2090253	B1	3/2012
EP	2430986	A2	3/2012
EP	2446834	A1	5/2012
EP	2455007	A2	5/2012
EP	2457519	A1	5/2012
EP	2462878	A1	6/2012
EP	2462880	A2	6/2012
EP	1813204	B1	7/2012
EP	2189121	B1	7/2012
EP	2248475	B1	7/2012
EP	2005895	B1	8/2012
EP	2090248	B1	8/2012
EP	2481359	A1	8/2012
EP	2486862	A2	8/2012
EP	1908412	B1	9/2012
EP	1935351	B1	9/2012
EP	2497431	A1	9/2012
EP	1550412	B2	10/2012
EP	1616549	B1	10/2012
EP	2030579	B1	10/2012
EP	2090252	B1	10/2012
EP	2517637	A1	10/2012
EP	2517638	A1	10/2012
EP	2517642	A2	10/2012
EP	2517645	A2	10/2012
EP	2517649	A2	10/2012
EP	2517651	A2	10/2012
EP	2526877	A1	11/2012
EP	1884206	B1	3/2013
EP	2090238	B1	4/2013
EP	1806103	B1	5/2013
EP	1982657	B1	7/2013

(56) **References Cited**

FOREIGN PATENT DOCUMENTS

EP	2614782	A2	7/2013
EP	2090234	B1	9/2013
EP	2633830	A1	9/2013
EP	2090244	B1	10/2013
EP	2644124	A1	10/2013
EP	2644209	A2	10/2013
EP	2649948	A1	10/2013
EP	2649949	A1	10/2013
EP	2700367	A1	2/2014
EP	1772105	B1	5/2014
EP	2759267	A2	7/2014
EP	2446835	B1	1/2015
ES	2396594	T3	2/2013
FR	459743	A	11/1913
FR	999646	A	2/1952
FR	1112936	A	3/1956
FR	2598905	A1	11/1987
FR	2765794	A1	1/1999
FR	2815842	A1	5/2002
GB	939929	A	10/1963
GB	1210522	A	10/1970
GB	1217159	A	12/1970
GB	1339394	A	12/1973
GB	2024012	A	1/1980
GB	2109241	A	6/1983
GB	2272159	A	5/1994
GB	2284242	A	5/1995
GB	2286435	A	8/1995
GB	2336214	A	10/1999
GB	2425903	A	11/2006
GB	2423199	B	5/2009
GR	930100110	A	11/1993
JP	S4711908	Y1	5/1972
JP	S5033988	U	4/1975
JP	S56112235	A	9/1981
JP	S58500053	A	1/1983
JP	S58501360	A	8/1983
JP	S59174920	A	10/1984
JP	S60100955	A	6/1985
JP	S60212152	A	10/1985
JP	S6198249	A	5/1986
JP	S61502036	A	9/1986
JP	S62170011	U	10/1987
JP	S6359764	A	3/1988
JP	S63147449	A	6/1988
JP	S63203149	A	8/1988
JP	H02279149	A	11/1990
JP	H0312126	A	1/1991
JP	H04215747	A	8/1992
JP	H04131860	U	12/1992
JP	H0584252	A	4/1993
JP	H05123325	A	5/1993
JP	H05212039	A	8/1993
JP	H067357	A	1/1994
JP	H0630945	A	2/1994
JP	H0654857	A	3/1994
JP	H0626812	U	4/1994
JP	H06121798	A	5/1994
JP	H06125913	A	5/1994
JP	H06197901	A	7/1994
JP	H06237937	A	8/1994
JP	H06327684	A	11/1994
JP	H0731623	A	2/1995
JP	H0747070	A	2/1995
JP	H0751273	A	2/1995
JP	H07124166	A	5/1995
JP	H07163574	A	6/1995
JP	H07171163	A	7/1995
JP	H07255735	A	10/1995
JP	H07285089	A	10/1995
JP	H0833641	A	2/1996
JP	H0833642	A	2/1996
JP	H08164141	A	6/1996
JP	H08182684	A	7/1996
JP	H08507708	A	8/1996
JP	H08229050	A	9/1996
JP	H08336540	A	12/1996
JP	H08336544	A	12/1996
JP	H09501081	A	2/1997
JP	H09501577	A	2/1997
JP	H09164144	A	6/1997
JP	H10113352	A	5/1998
JP	H10118090	A	5/1998
JP	H10512469	A	12/1998
JP	2000014632	A	1/2000
JP	2000033071	A	2/2000
JP	2000112002	A	4/2000
JP	2000166932	A	6/2000
JP	2000171730	A	6/2000
JP	2000287987	A	10/2000
JP	2000325303	A	11/2000
JP	2001046384	A	2/2001
JP	2001087272	A	4/2001
JP	2001514541	A	9/2001
JP	2001276091	A	10/2001
JP	2001286477	A	10/2001
JP	2001517473	A	10/2001
JP	2002051974	A	2/2002
JP	2002085415	A	3/2002
JP	2002143078	A	5/2002
JP	2002204801	A	7/2002
JP	2002528161	A	9/2002
JP	2002314298	A	10/2002
JP	2002369820	A	12/2002
JP	2003000603	A	1/2003
JP	2003500153	A	1/2003
JP	2003504104	A	2/2003
JP	2003135473	A	5/2003
JP	2003148903	A	5/2003
JP	2003164066	A	6/2003
JP	2003521301	A	7/2003
JP	2003523251	A	8/2003
JP	2003523254	A	8/2003
JP	2004147701	A	5/2004
JP	2004162035	A	6/2004
JP	2004229976	A	8/2004
JP	2004524076	A	8/2004
JP	2004531280	A	10/2004
JP	2004532084	A	10/2004
JP	2004532676	A	10/2004
JP	2004329624	A	11/2004
JP	2004337617	A	12/2004
JP	2004344662	A	12/2004
JP	2004344663	A	12/2004
JP	2005028147	A	2/2005
JP	2005028148	A	2/2005
JP	2005028149	A	2/2005
JP	2005505309	A	2/2005
JP	2005505322	A	2/2005
JP	2005505334	A	2/2005
JP	2005080702	A	3/2005
JP	2005103280	A	4/2005
JP	2005103281	A	4/2005
JP	2005103293	A	4/2005
JP	2005511131	A	4/2005
JP	2005511137	A	4/2005
JP	2005131163	A	5/2005
JP	2005131164	A	5/2005
JP	2005131173	A	5/2005
JP	2005131211	A	5/2005
JP	2005131212	A	5/2005
JP	2005137423	A	6/2005
JP	2005137919	A	6/2005
JP	2005144183	A	6/2005
JP	2005152416	A	6/2005
JP	2005516714	A	6/2005
JP	2005521109	A	7/2005
JP	2005523105	A	8/2005
JP	2005524474	A	8/2005
JP	2005296412	A	10/2005
JP	2005328882	A	12/2005
JP	2005335432	A	12/2005
JP	2005342267	A	12/2005
JP	2006034975	A	2/2006

(56) **References Cited**

FOREIGN PATENT DOCUMENTS

JP	2006034977	A	2/2006
JP	2006034978	A	2/2006
JP	2006034980	A	2/2006
JP	2006506106	A	2/2006
JP	2006510879	A	3/2006
JP	2006187649	A	7/2006
JP	2006218297	A	8/2006
JP	2006223872	A	8/2006
JP	2006281405	A	10/2006
JP	2006289064	A	10/2006
JP	2006334412	A	12/2006
JP	2006334417	A	12/2006
JP	2006346445	A	12/2006
JP	2007050253	A	3/2007
JP	2007061628	A	3/2007
JP	3906843	B2	4/2007
JP	2007083051	A	4/2007
JP	2007098130	A	4/2007
JP	2007105481	A	4/2007
JP	2007117725	A	5/2007
JP	2007130471	A	5/2007
JP	3934161	B2	6/2007
JP	2007203049	A	8/2007
JP	2007203051	A	8/2007
JP	2007203057	A	8/2007
JP	2007209751	A	8/2007
JP	2007524435	A	8/2007
JP	2007222615	A	9/2007
JP	2007229448	A	9/2007
JP	4001860	B2	10/2007
JP	2007325922	A	12/2007
JP	2008068073	A	3/2008
JP	2008206967	A	9/2008
JP	2008212637	A	9/2008
JP	2008212638	A	9/2008
JP	2008220956	A	9/2008
JP	2008259860	A	10/2008
JP	2008264535	A	11/2008
JP	2008283459	A	11/2008
JP	2009502351	A	1/2009
JP	2009506799	A	2/2009
JP	2009507526	A	2/2009
JP	2009072599	A	4/2009
JP	2009090113	A	4/2009
JP	2009106752	A	5/2009
JP	2009189836	A	8/2009
JP	2009189837	A	8/2009
JP	2009189838	A	8/2009
JP	2009536082	A	10/2009
JP	2009261944	A	11/2009
JP	2009539420	A	11/2009
JP	2009291604	A	12/2009
JP	2010504808	A	2/2010
JP	2010504809	A	2/2010
JP	2010504846	A	2/2010
JP	2010505524	A	2/2010
JP	2010069310	A	4/2010
JP	2010088876	A	4/2010
JP	2010098844	A	4/2010
JP	4461008	B2	5/2010
JP	4549018	B2	9/2010
JP	2010540192	A	12/2010
JP	4783373	B2	9/2011
JP	5140421	B2	2/2013
JP	5162595	B2	3/2013
JP	2013128791	A	7/2013
JP	5333899	B2	11/2013
KR	20110003229	A	1/2011
RU	1814161	A1	5/1993
RU	1814161	C	5/1993
RU	2008830	C1	3/1994
RU	2052979	C1	1/1996
RU	2098025	C1	12/1997
RU	2141279	C1	11/1999
RU	2144791	C1	1/2000
RU	2181566	C2	4/2002
RU	2187249	C2	8/2002
RU	2189091	C2	9/2002
RU	32984	U1	10/2003
RU	2225170	C2	3/2004
RU	42750	U1	12/2004
RU	61114	U1	2/2007
SU	189517	A	1/1967
SU	328636	A	9/1972
SU	674747	A1	7/1979
SU	886900	A1	12/1981
SU	1009439	A	4/1983
SU	1022703	A1	6/1983
SU	1333319	A2	8/1987
SU	1377053	A1	2/1988
SU	1509051	A1	9/1989
SU	1561964	A1	5/1990
SU	1708312	A1	1/1992
SU	1722476	A1	3/1992
SU	1752361	A1	8/1992
WO	WO-8202824	A1	9/1982
WO	WO-8602254	A1	4/1986
WO	WO-9115157	A1	10/1991
WO	WO-9220295	A1	11/1992
WO	WO-9221300	A1	12/1992
WO	WO-9308755	A1	5/1993
WO	WO-9313718	A1	7/1993
WO	WO-9314690	A1	8/1993
WO	WO-9315648	A1	8/1993
WO	WO-9315850	A1	8/1993
WO	WO-9319681	A1	10/1993
WO	WO-9400060	A1	1/1994
WO	WO-9411057	A1	5/1994
WO	WO-9412108	A1	6/1994
WO	WO-9418893	A1	9/1994
WO	WO-9420030	A1	9/1994
WO	WO-9422378	A1	10/1994
WO	WO-9423659	A1	10/1994
WO	WO-9424943	A1	11/1994
WO	WO-9424947	A1	11/1994
WO	WO-9502369	A1	1/1995
WO	WO-9503743	A1	2/1995
WO	WO-9506817	A1	3/1995
WO	WO-9509576	A1	4/1995
WO	WO-9509577	A1	4/1995
WO	WO-9514436	A1	6/1995
WO	WO-9517855	A1	7/1995
WO	WO-9518383	A1	7/1995
WO	WO-9518572	A1	7/1995
WO	WO-9519739	A1	7/1995
WO	WO-9520360	A1	8/1995
WO	WO-9523557	A1	9/1995
WO	WO-9524865	A1	9/1995
WO	WO-9525471	A3	9/1995
WO	WO-9526562	A1	10/1995
WO	WO-9529639	A1	11/1995
WO	WO-9604858	A1	2/1996
WO	WO-9618344	A2	6/1996
WO	WO-9619151	A1	6/1996
WO	WO-9619152	A1	6/1996
WO	WO-9620652	A1	7/1996
WO	WO-9621119	A1	7/1996
WO	WO-9622055	A1	7/1996
WO	WO-9623448	A1	8/1996
WO	WO-9624301	A1	8/1996
WO	WO-9627337	A1	9/1996
WO	WO-9631155	A1	10/1996
WO	WO-9635464	A1	11/1996
WO	WO-9639085	A1	12/1996
WO	WO-9639086	A1	12/1996
WO	WO-9639087	A1	12/1996
WO	WO-9639088	A1	12/1996
WO	WO-9639089	A1	12/1996
WO	WO-9700646	A1	1/1997
WO	WO-9700647	A1	1/1997
WO	WO-9701989	A1	1/1997
WO	WO-9706582	A1	2/1997
WO	WO-9710763	A1	3/1997
WO	WO-9710764	A1	3/1997

(56) **References Cited**

FOREIGN PATENT DOCUMENTS

WO	WO-9711648	A2	4/1997
WO	WO-9711649	A1	4/1997
WO	WO-9715237	A1	5/1997
WO	WO-9724073	A1	7/1997
WO	WO-9724993	A1	7/1997
WO	WO-9730644	A1	8/1997
WO	WO-9734533	A1	9/1997
WO	WO-9737598	A1	10/1997
WO	WO-9739688	A2	10/1997
WO	WO-9801080	A1	1/1998
WO	WO-9817180	A1	4/1998
WO	WO-9822154	A2	5/1998
WO	WO-9827880	A1	7/1998
WO	WO-9830153	A1	7/1998
WO	WO-9847436	A1	10/1998
WO	WO-9858589	A1	12/1998
WO	WO-9902090	A1	1/1999
WO	WO-9903407	A1	1/1999
WO	WO-9903408	A1	1/1999
WO	WO-9903409	A1	1/1999
WO	WO-9912483	A1	3/1999
WO	WO-9912487	A1	3/1999
WO	WO-9912488	A1	3/1999
WO	WO-9915086	A1	4/1999
WO	WO-9915091	A1	4/1999
WO	WO-9923933	A2	5/1999
WO	WO-9923959	A1	5/1999
WO	WO-9925261	A1	5/1999
WO	WO-9929244	A1	6/1999
WO	WO-9934744	A1	7/1999
WO	WO-9945849	A1	9/1999
WO	WO-9948430	A1	9/1999
WO	WO-9951158	A1	10/1999
WO	WO-0024322	A1	5/2000
WO	WO-0024330	A1	5/2000
WO	WO-0041638	A1	7/2000
WO	WO-0048506	A1	8/2000
WO	WO-0053112	A2	9/2000
WO	WO-0054653	A1	9/2000
WO	WO-0057796	A1	10/2000
WO	WO-0064365	A1	11/2000
WO	WO-0072762	A1	12/2000
WO	WO-0072765	A1	12/2000
WO	WO-0078222	A1	12/2000
WO	WO-0103587	A1	1/2001
WO	WO-0105702	A1	1/2001
WO	WO-0110482	A1	2/2001
WO	WO-0135845	A1	5/2001
WO	WO-0154594	A1	8/2001
WO	WO-0158371	A1	8/2001
WO	WO-0162158	A2	8/2001
WO	WO-0162161	A1	8/2001
WO	WO-0162162	A1	8/2001
WO	WO-0162163	A1	8/2001
WO	WO-0162164	A2	8/2001
WO	WO-0162169	A2	8/2001
WO	WO-0178605	A2	10/2001
WO	WO-0180757	A2	11/2001
WO	WO-0191646	A1	12/2001
WO	WO-0200121	A1	1/2002
WO	WO-0207608	A2	1/2002
WO	WO-0207618	A1	1/2002
WO	WO-0217799	A1	3/2002
WO	WO-0219920	A1	3/2002
WO	WO-0219932	A1	3/2002
WO	WO-0226143	A1	4/2002
WO	WO-0230297	A2	4/2002
WO	WO-0232322	A2	4/2002
WO	WO-0236028	A1	5/2002
WO	WO-0243571	A2	6/2002
WO	WO-02058568	A1	8/2002
WO	WO-02060328	A1	8/2002
WO	WO-02065933	A2	8/2002
WO	WO-02067785	A2	9/2002
WO	WO-02080781	A2	10/2002
WO	WO-02085218	A2	10/2002
WO	WO-02087586	A1	11/2002
WO	WO-02098302	A1	12/2002
WO	WO-03000138	A2	1/2003
WO	WO-03001329	A2	1/2003
WO	WO-03001986	A2	1/2003
WO	WO-03013363	A1	2/2003
WO	WO-03013372	A2	2/2003
WO	WO-03015604	A2	2/2003
WO	WO-03020106	A2	3/2003
WO	WO-03020139	A2	3/2003
WO	WO-03024339	A1	3/2003
WO	WO-03030743	A2	4/2003
WO	WO-03037193	A1	5/2003
WO	WO-03055402	A1	7/2003
WO	WO-03057048	A1	7/2003
WO	WO-03057058	A1	7/2003
WO	WO-03063694	A1	8/2003
WO	WO-03077769	A1	9/2003
WO	WO-03079911	A1	10/2003
WO	WO-03082126	A1	10/2003
WO	WO-03086206	A1	10/2003
WO	WO-03088845	A2	10/2003
WO	WO-03047436	A3	11/2003
WO	WO-03090630	A2	11/2003
WO	WO-03094743	A1	11/2003
WO	WO-03094745	A1	11/2003
WO	WO-03094746	A1	11/2003
WO	WO-03094747	A1	11/2003
WO	WO-03101313	A1	12/2003
WO	WO-03105698	A2	12/2003
WO	WO-03105702	A2	12/2003
WO	WO-2004006980	A2	1/2004
WO	WO-2004011037	A2	2/2004
WO	WO-2004014238	A2	2/2004
WO	WO-03079909	A3	3/2004
WO	WO-2004019769	A1	3/2004
WO	WO-2004019803	A1	3/2004
WO	WO-2004021868	A2	3/2004
WO	WO-2004028585	A2	4/2004
WO	WO-2004030554	A1	4/2004
WO	WO-2004032754	A2	4/2004
WO	WO-2004032760	A2	4/2004
WO	WO-2004032762	A1	4/2004
WO	WO-2004032763	A2	4/2004
WO	WO-2004032783	A1	4/2004
WO	WO-2004034875	A2	4/2004
WO	WO-2004047626	A1	6/2004
WO	WO-2004047653	A2	6/2004
WO	WO-2004049956	A2	6/2004
WO	WO-2004050971	A2	6/2004
WO	WO-2004052426	A2	6/2004
WO	WO-2004056276	A1	7/2004
WO	WO-2004056277	A1	7/2004
WO	WO-2004062516	A1	7/2004
WO	WO-2004064600	A2	8/2004
WO	WO-2004078050	A2	9/2004
WO	WO-2004078051	A2	9/2004
WO	WO-2004078236	A2	9/2004
WO	WO-2004086987	A1	10/2004
WO	WO-2004096015	A2	11/2004
WO	WO-2004096057	A2	11/2004
WO	WO-2004103157	A2	12/2004
WO	WO-2004105593	A1	12/2004
WO	WO-2004105621	A1	12/2004
WO	WO-2004112618	A2	12/2004
WO	WO-2004112652	A2	12/2004
WO	WO-2005027983	A2	3/2005
WO	WO-2005037329	A2	4/2005
WO	WO-2005042041	A1	5/2005
WO	WO-2005044078	A2	5/2005
WO	WO-2005055846	A1	6/2005
WO	WO-2005072634	A2	8/2005
WO	WO-2005078892	A1	8/2005
WO	WO-2005079675	A2	9/2005
WO	WO-2005087128	A1	9/2005
WO	WO-2005096954	A2	10/2005
WO	WO-2005112806	A2	12/2005
WO	WO-2005112808	A1	12/2005

(56) **References Cited**

FOREIGN PATENT DOCUMENTS

WO	WO-2005115251	A1	12/2005
WO	WO-2005115253	A2	12/2005
WO	WO-2005117735	A1	12/2005
WO	WO-2005122936	A1	12/2005
WO	WO-2006023486	A1	3/2006
WO	WO-2006023578	A2	3/2006
WO	WO-2006027014	A1	3/2006
WO	WO-2006028314	A1	3/2006
WO	WO-2006044490	A2	4/2006
WO	WO-2006044581	A2	4/2006
WO	WO-2006044810	A2	4/2006
WO	WO-2006049852	A2	5/2006
WO	WO-2006051252	A1	5/2006
WO	WO-2006059067	A1	6/2006
WO	WO-2006083748	A1	8/2006
WO	WO-2006085389	A1	8/2006
WO	WO-2006092563	A1	9/2006
WO	WO-2006092565	A1	9/2006
WO	WO-2006115958	A1	11/2006
WO	WO-2006125940	A1	11/2006
WO	WO-2006132992	A2	12/2006
WO	WO-2007002180	A2	1/2007
WO	WO-2007016290	A2	2/2007
WO	WO-2007018898	A2	2/2007
WO	WO-2007059233	A2	5/2007
WO	WO-2007074430	A1	7/2007
WO	WO-2007089603	A2	8/2007
WO	WO-2007098220	A2	8/2007
WO	WO-2007121579	A1	11/2007
WO	WO-2007131110	A2	11/2007
WO	WO-2007137304	A2	11/2007
WO	WO-2007139734	A2	12/2007
WO	WO-2007142625	A2	12/2007
WO	WO-2007145825	A2	12/2007
WO	WO-2007146987	A2	12/2007
WO	WO-2007147439	A1	12/2007
WO	WO-2008020964	A2	2/2008
WO	WO-2008021969	A2	2/2008
WO	WO-2008039249	A1	4/2008
WO	WO-2008039270	A1	4/2008
WO	WO-2008045383	A2	4/2008
WO	WO-2008057281	A2	5/2008
WO	WO-2008070763	A1	6/2008
WO	WO-2008089404	A2	7/2008
WO	WO-2008101080	A1	8/2008
WO	WO-2008101228	A2	8/2008
WO	WO-2008103797	A2	8/2008
WO	WO-2008109125	A1	9/2008
WO	WO-2008124748	A1	10/2008
WO	WO-2009022614	A1	2/2009
WO	WO-2009023851	A1	2/2009
WO	WO-2009033057	A2	3/2009
WO	WO-2009039506	A1	3/2009
WO	WO-2009046394	A1	4/2009
WO	WO-2009067649	A2	5/2009
WO	WO-2009091497	A2	7/2009
WO	WO-2009120944	A2	10/2009
WO	WO-2009137761	A2	11/2009
WO	WO-2009143092	A1	11/2009
WO	WO-2009143331	A1	11/2009
WO	WO-2009150650	A2	12/2009
WO	WO-2010028332	A2	3/2010
WO	WO-2010030434	A1	3/2010
WO	WO-2010050771	A2	5/2010
WO	WO-2010054404	A1	5/2010
WO	WO-2010063795	A1	6/2010
WO	WO-2010093333	A1	8/2010
WO	WO-2010098871	A2	9/2010
WO	WO-2011008672	A2	1/2011
WO	WO-2011013103	A1	2/2011
WO	WO-2011044343	A2	4/2011
WO	WO-2011060311	A2	5/2011
WO	WO-2012006306	A2	1/2012
WO	WO-2012021671	A1	2/2012
WO	WO-2012040438	A1	3/2012
WO	WO-2012044551	A1	4/2012
WO	WO-2012044554	A1	4/2012
WO	WO-2012044597	A1	4/2012
WO	WO-2012044606	A2	4/2012
WO	WO-2012044820	A1	4/2012
WO	WO-2012044844	A2	4/2012
WO	WO-2012044853	A1	4/2012
WO	WO-2012058213	A2	5/2012
WO	WO-2012068156	A2	5/2012
WO	WO-2012127462	A1	9/2012
WO	WO-2012143913	A2	10/2012
WO	WO-2012148667	A2	11/2012
WO	WO-2012148703	A2	11/2012
WO	WO-2012160163	A1	11/2012
WO	WO-2013009699	A2	1/2013
WO	WO-2013036409	A1	3/2013
WO	WO-2013043707	A2	3/2013
WO	WO-2013043717	A1	3/2013
WO	WO-2013043721	A2	3/2013
WO	WO-2013062978	A2	5/2013
WO	WO-2013/087092	A1	6/2013
WO	WO-2013148762	A2	10/2013
WO	WO-2013167427	A1	11/2013
WO	WO-2014004199	A1	1/2014

OTHER PUBLICATIONS

B.R. Coolman, DVM, MS et al., "Comparison of Skin Staples With Sutures for Anastomosis of the Small Intestine in Dogs," Abstract; http://www.blackwell-synergy.com/doi/abs/10.1053/jvet.2000.7539?cookieSet=1&journalCode=vsu which redirects to http://www3.interscience.wiley.com/journal/119040681/abstract?CRETRY=1&SRETRY=0; [online] accessed: Sep. 22, 2008 (2 pages).

"Biomedical Coatings," Fort Wayne Metals, Research Products Corporation, obtained online at www.fwmetals.com on Jun. 21, 2010 (1 page).

Van Meer et al., "A Disposable Plastic Compact Wrist for Smart Minimally Invasive Surgical Tools," LAAS/CNRS (Aug. 2005).

Breedveld et al., "A New, Easily Miniaturized Sterrable Endoscope," IEEE Engineering in Medicine and Biology Magazine (Nov./Dec. 2005).

D. Tuite, Ed., "Get the Lowdown on Ultracapacitors," Nov. 15, 2007; [online] URL: http://electronicdesign.com/Articles/Print.cfm?ArticleID=17465, accessed Jan. 15, 2008 (5 pages).

Datasheet for Panasonic TK Relays Ultra Low Profile 2 A Polarized Relay, Copyright Matsushita Electric Works, Ltd. (Known of at least as early as Aug. 17, 2010), 5 pages.

ASTM procedure D2240-00, "Standard Test Method for Rubber Property-Durometer Hardness," (Published Aug. 2000).

ASTM procedure D2240-05, "Standard Test Method for Rubber Property-Durometer Hardness," (Published Apr. 2010).

Covidien Brochure, "Endo GIA™ Reloads with Tri-Staple™ Technology," (2010), 1 page.

Covidien Brochure, "Endo GIA™ Reloads with Tri-Staple™ Technology and Endo GIA™ Ultra Universal Staplers," (2010), 2 pages.

Covidien Brochure, "Endo GIA™ Black Reload with Tri-Staple™ Technology," (2012), 2 pages.

Covidien Brochure, "Endo GIA™ Curved Tip Reload with Tri-Staple™ Technology," (2012), 2 pages.

Covidien Brochure, "Endo GIA™ Reloads with Tri-Staple™ Technology," (2010), 2 pages.

Covidien Brochure, "Endo GIA™ Ultra Universal Stapler," (2010), 2 pages.

Miyata et al., "Biomolecule-Sensitive Hydrogels," Advanced Drug Delivery Reviews, 54 (2002) pp. 79-98.

Jeong et al., "Thermosensitive Sol-Gel Reversible Hydrogels," Advanced Drug Delivery Reviews, 54 (2002) pp. 37-51.

Byrne et al., "Molecular Imprinting Within Hydrogels," Advanced Drug Delivery Reviews, 54 (2002) pp. 149-161.

Qiu et al., "Environment-Sensitive Hydrogels for Drug Delivery," Advanced Drug Delivery Reviews, 53 (2001) pp. 321-339.

Hoffman, "Hydrogels for Biomedical Applications," Advanced Drug Delivery Reviews, 43 (2002) pp. 3-12.

(56) **References Cited**

OTHER PUBLICATIONS

Hoffman, "Hydrogels for Biomedical Applications," Advanced Drug Delivery Reviews, 54 (2002) pp. 3-12.
Peppas, "Physiologically Responsive Hydrogels," Journal of Bioactive and Compatible Polymers, vol. 6 (Jul. 1991) pp. 241-246.
Ebara, "Carbohydrate-Derived Hydrogels and Microgels," Engineered Carbohydrate-Based Materials for Biomedical Applications: Polymers, Surfaes, Dendrimers, Nanoparticles, and Hydrogels, Edited by Ravin Narain, 2011, pp. 337-345.
Peppas, Editor "Hydrogels in Medicine and Pharmacy," vol. I, Fundamentals, CRC Press, 1986.
Matsuda, "Thermodynamics of Formation of Porous Polymeric Membrane from Solutions," Polymer Journal, vol. 23, No. 5, pp. 435-444 (1991).
Young, "Microcellular foams via phase separation," Journal of Vacuum Science & Technology A 4(3), (May/Jun. 1986).
C.C. Thompson et al., "Peroral Endoscopic Reduction of Dilated Gastrojejunal Anastomosis After Roux-en-Y Gastric Bypass: A Possible New Option for Patients with Weight Regain," Surg Endosc (2006) vol. 20., pp. 1744-1748.
The Sodem Aseptic Battery Transfer Kit, Sodem Systems, 2000, 3 pages.
Chen et al., "Elastomeric Biomaterials for Tissue Engineering," Progress in Polymer Science 38 (2013), pp. 584-671.
Pitt et al., "Attachment of Hyaluronan to Metallic Surfaces," J. Biomed. Mater. Res. 68A: pp. 95-106, 2004.
Schellhammer et al., "Poly-Lactic-Acid for Coating of Endovascular Stents: Preliminary Results in Canine Experimental Av-Fistulae," Mat.-wiss. u. Werkstofftech., 32, pp. 193-199 (2001).
Solorio et al., "Gelatin Microspheres Crosslinked with Genipin for Local Delivery of Growth Factors," J. Tissue Eng. Regen. Med. (2010), 4(7): pp. 514-523.
http://ninpgan.net/publications/51-100/89.pdf; 2004, Ning Pan, On Uniqueness of Fibrous Materials, Design & Nature II. Eds: Colins, M. and Brebbia, C. WIT Press, Boston, 493-504.
Covidien iDrive™ Ultra in Service Reference Card, "iDrive™ Ultra Powered Stapling Device," (4 pages).
Covidien iDrive™ Ultra Powered Stapling System ibrochure, "The Power of iDrive™ Ultra Powered Stapling System and Tri-Staple™ Technology," (23 pages).
Seils et al., Covidien Summary: Clinical Study "UCONN Biodynamics: Final Report on Results," (2 pages).
Covidien "iDrive™ Ultra Powered Stapling System, A Guide for Surgeons," (6 pages).
Covidien "iDrive™ Ultra Powered Stapling System, Cleaning and Sterilization Guide," (2 pages).
Covidien Brochure "iDrive™ Ultra Powered Stapling System," (6 pages).
"Indian Standard: Automotive Vehicles—Brakes and Braking Systems (IS 11852-1:2001)", Mar. 1, 2001.

* cited by examiner

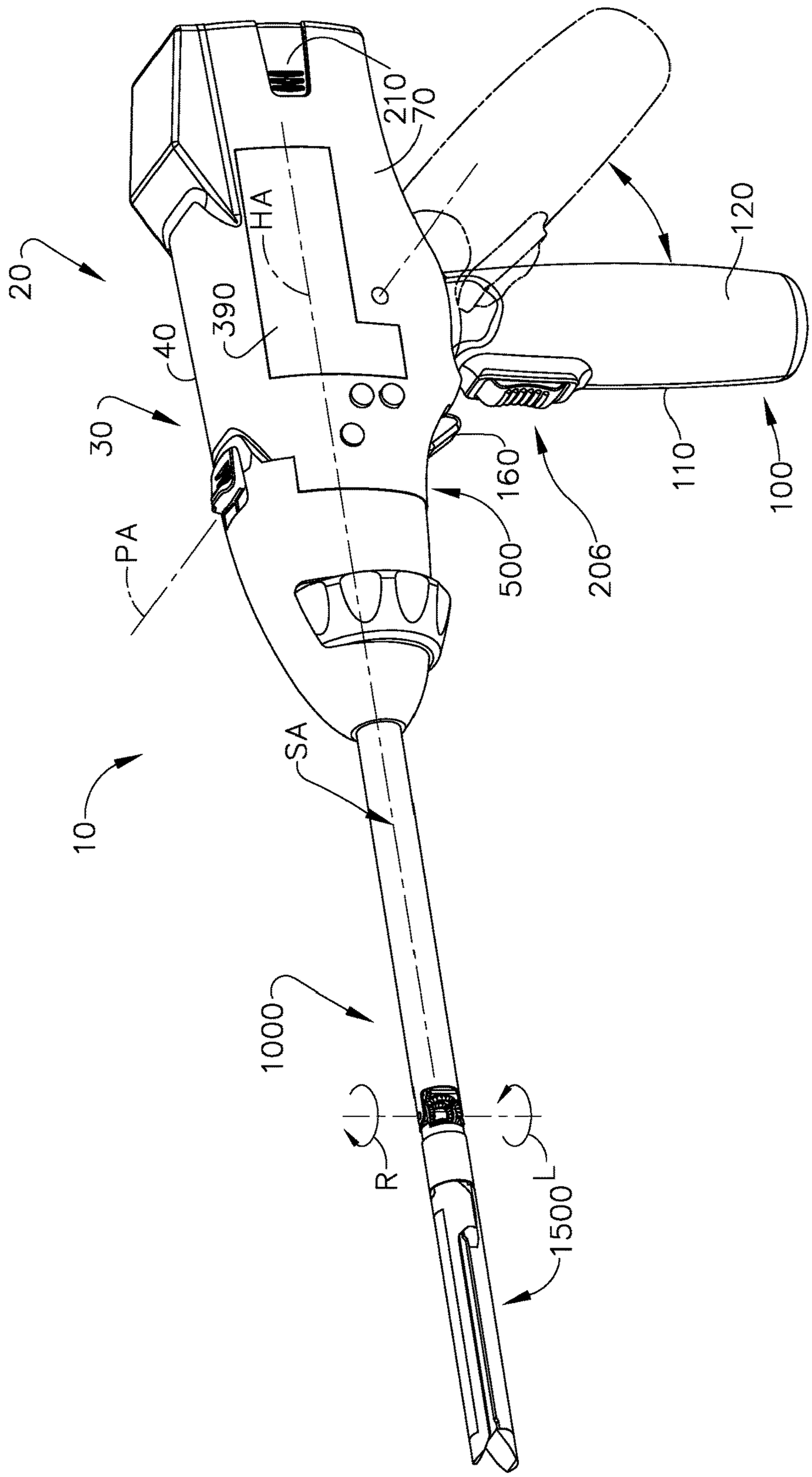
20
30
40
390
HA
210
70
120
110
100
160
500
206
PA
10
SA
1000
R
L
1500

FIG. 1

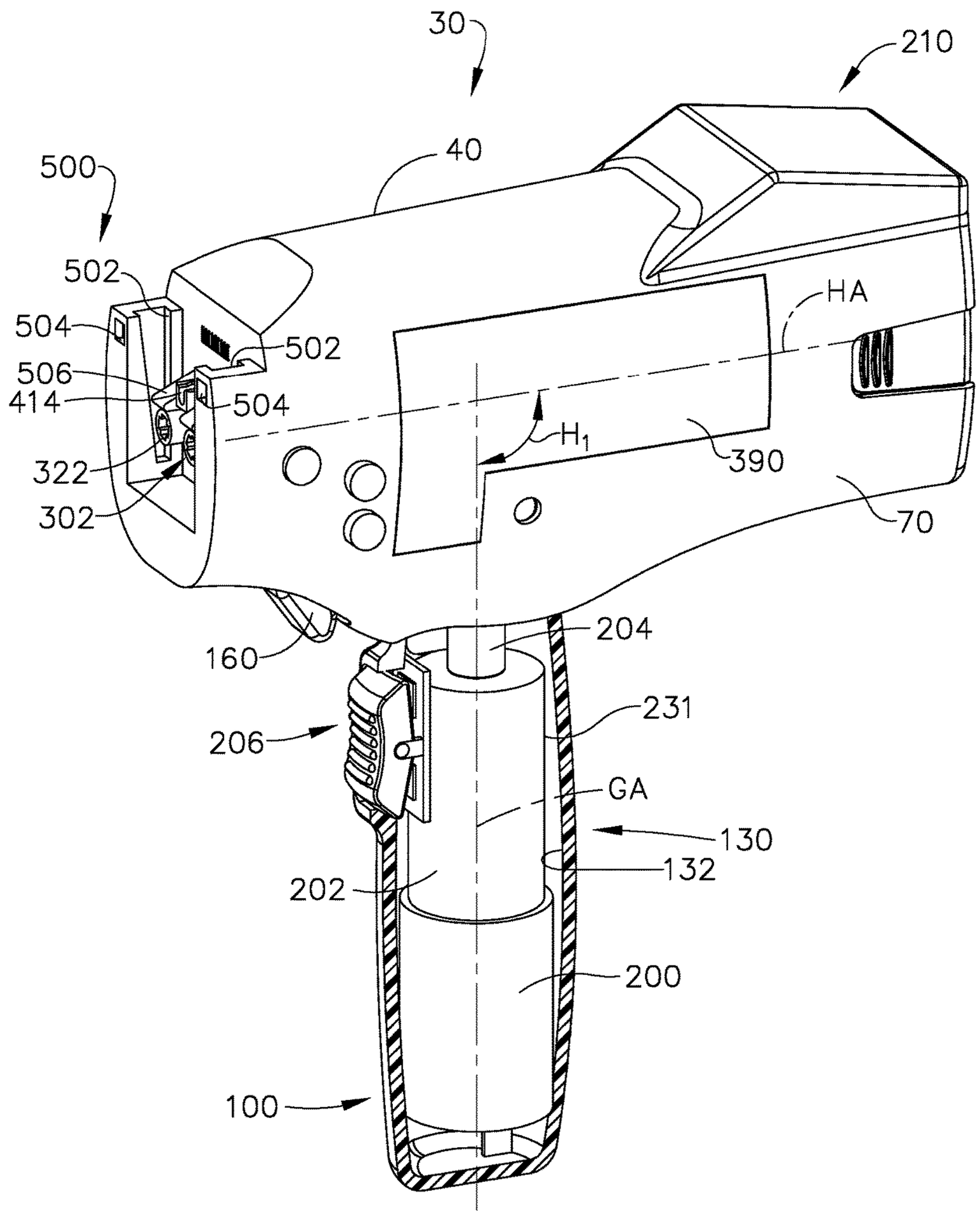
30
210
40
500
502
504
502
506
414
504
HA
H_1
390
322
302
70
160
204
231
206
GA
130
132
202
200
100

FIG. 2

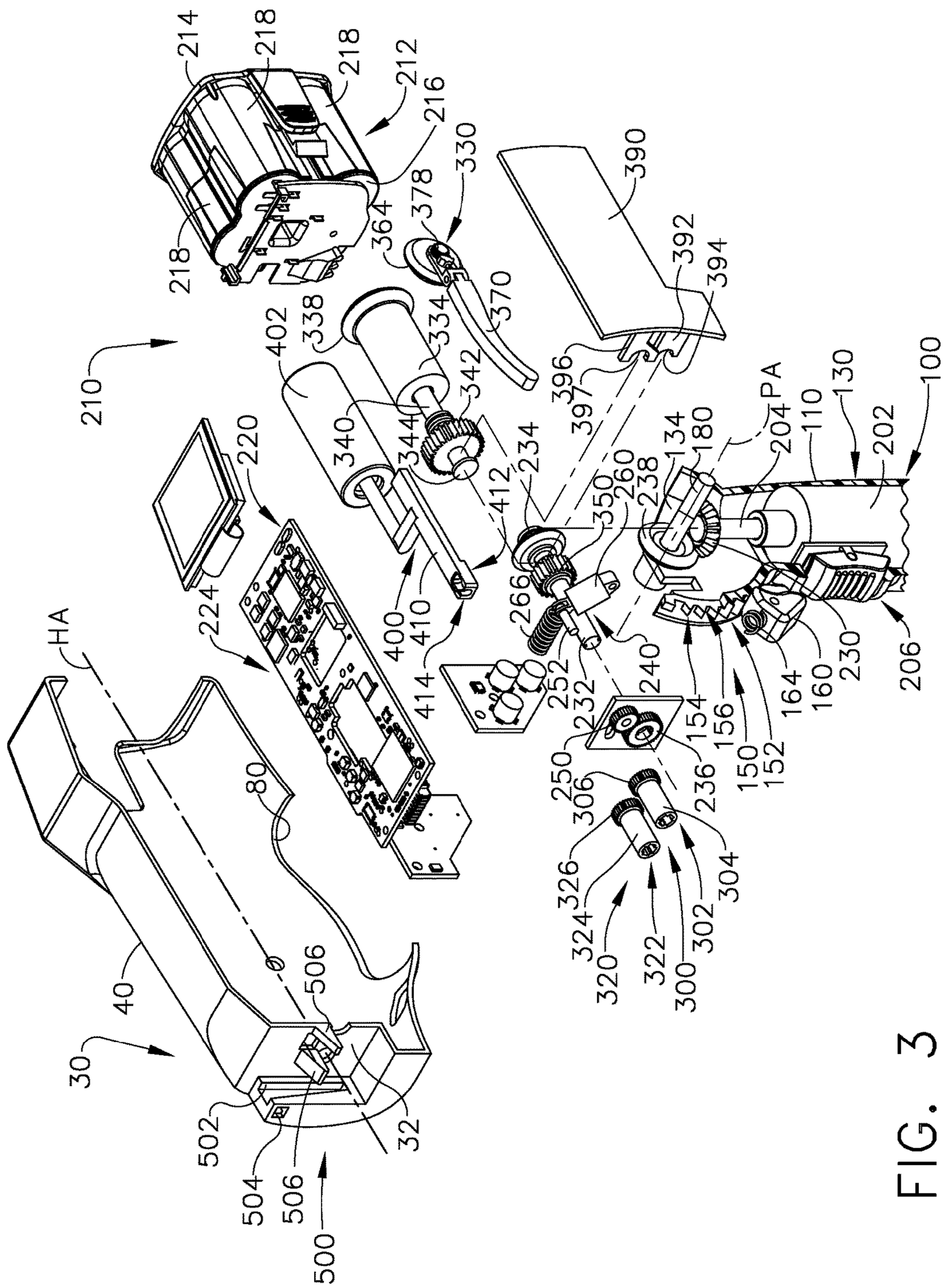
214
218
218
212
216
330
218
364
378
390
392
394
370
334
338
402
210
342
396
397
340
344
220
412
234
350
260
238
134
180
204
PA
110
130
202
100
224
400
410
266
414
252
232
240
154
156
150
152
164
160
230
206
HA
80
250
306
236
326
304
324
302
320
322
300
40
506
30
502
504
506
32
500

FIG. 3

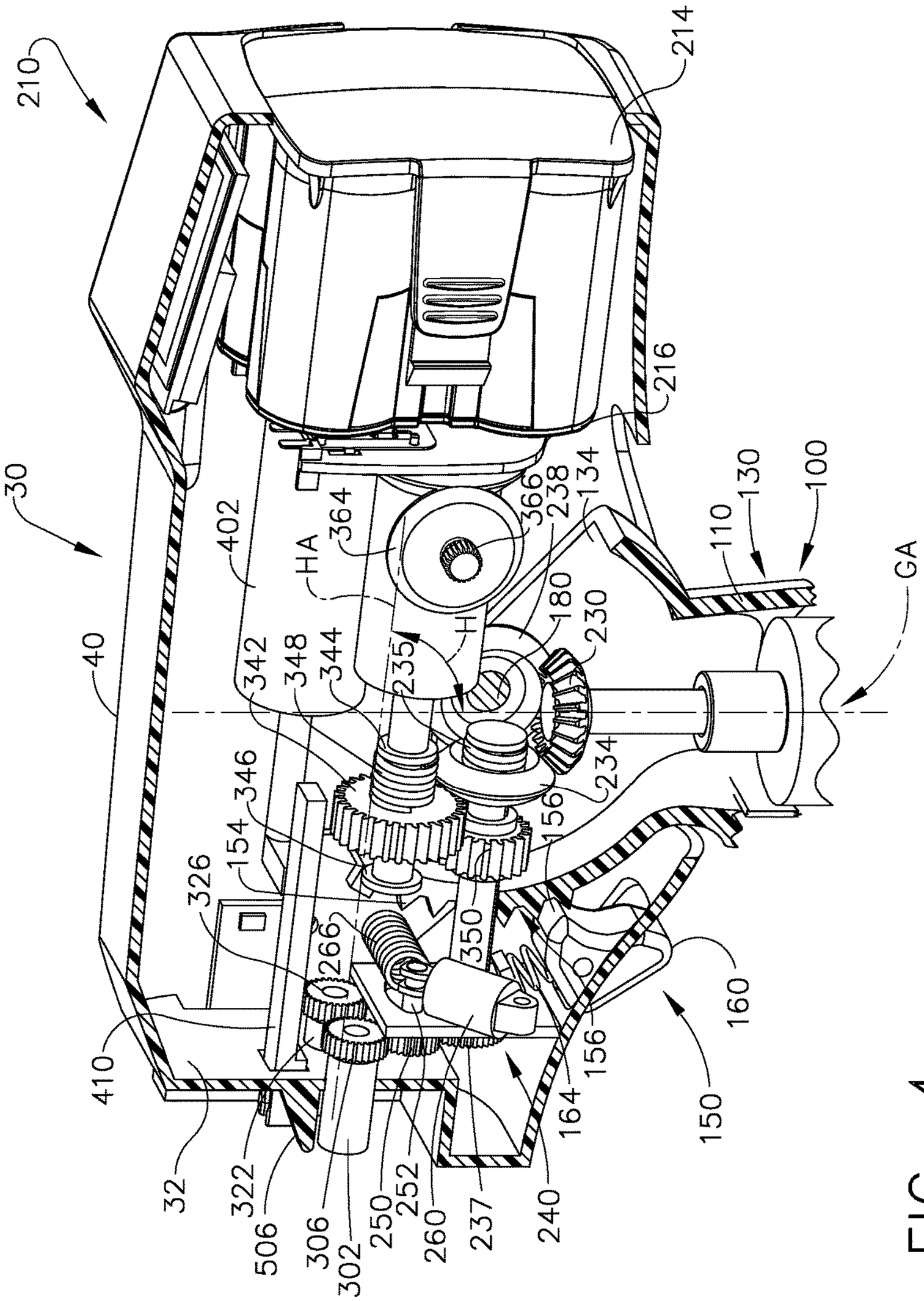
210
214
216
30
402
HA
364
366
238
134
110
130
100
GA
40
342
348
344
235
H
180
230
234
346
154
326
156
266
350
160
410
156
164
150
32
322
506
306
302
250
252
260
237
240

FIG. 4

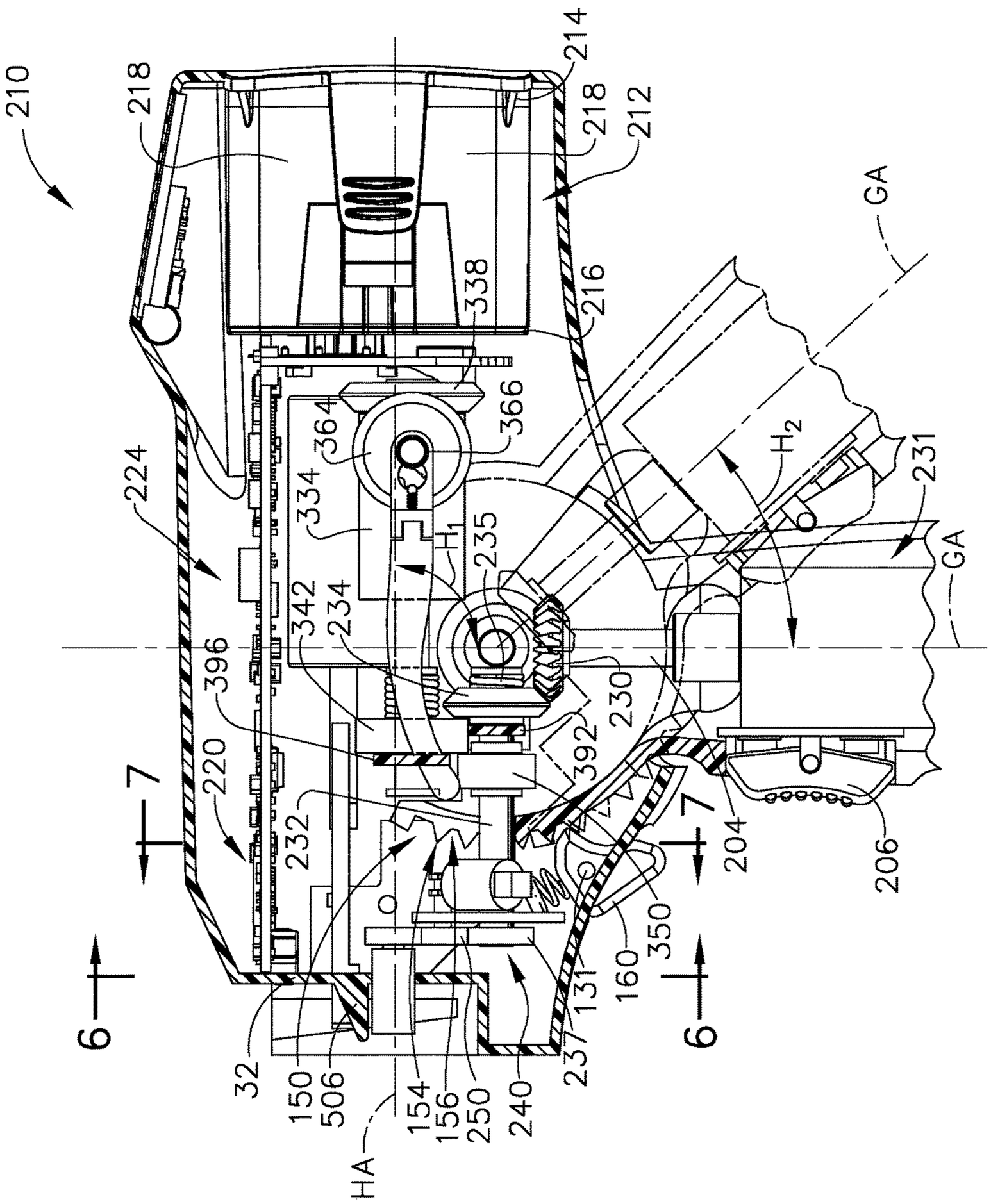
210
218
214
218
212
GA
338
216
366
364
224
334
H1
235
H2
231
GA
342
234
396
230
392
220
232
7
7
204
206
350
160
131
237
6
6
32
150
506
HA
154
156
250
240

FIG. 5

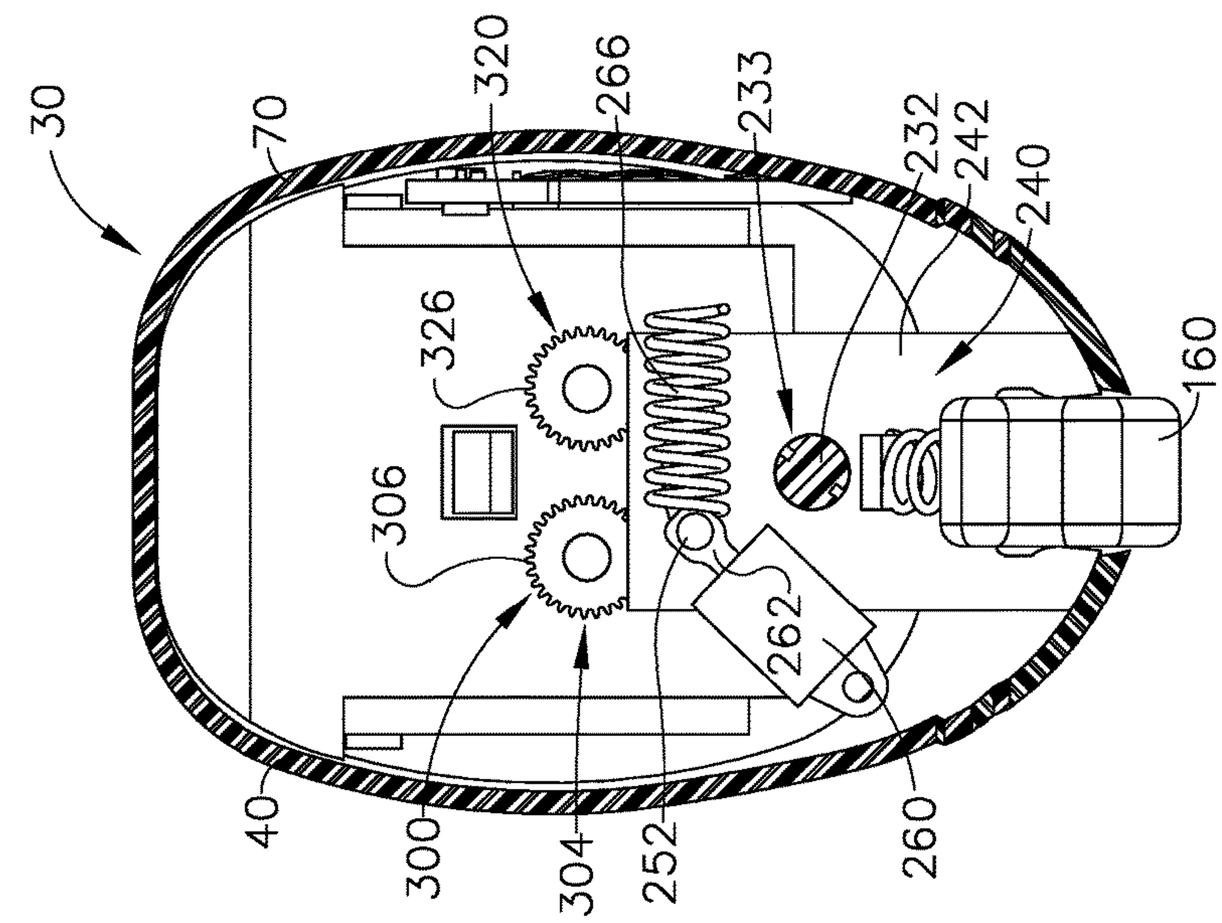
30
70
320
266
233
232
242
240
326
306
160
262
40
300
304
252
260

FIG. 7

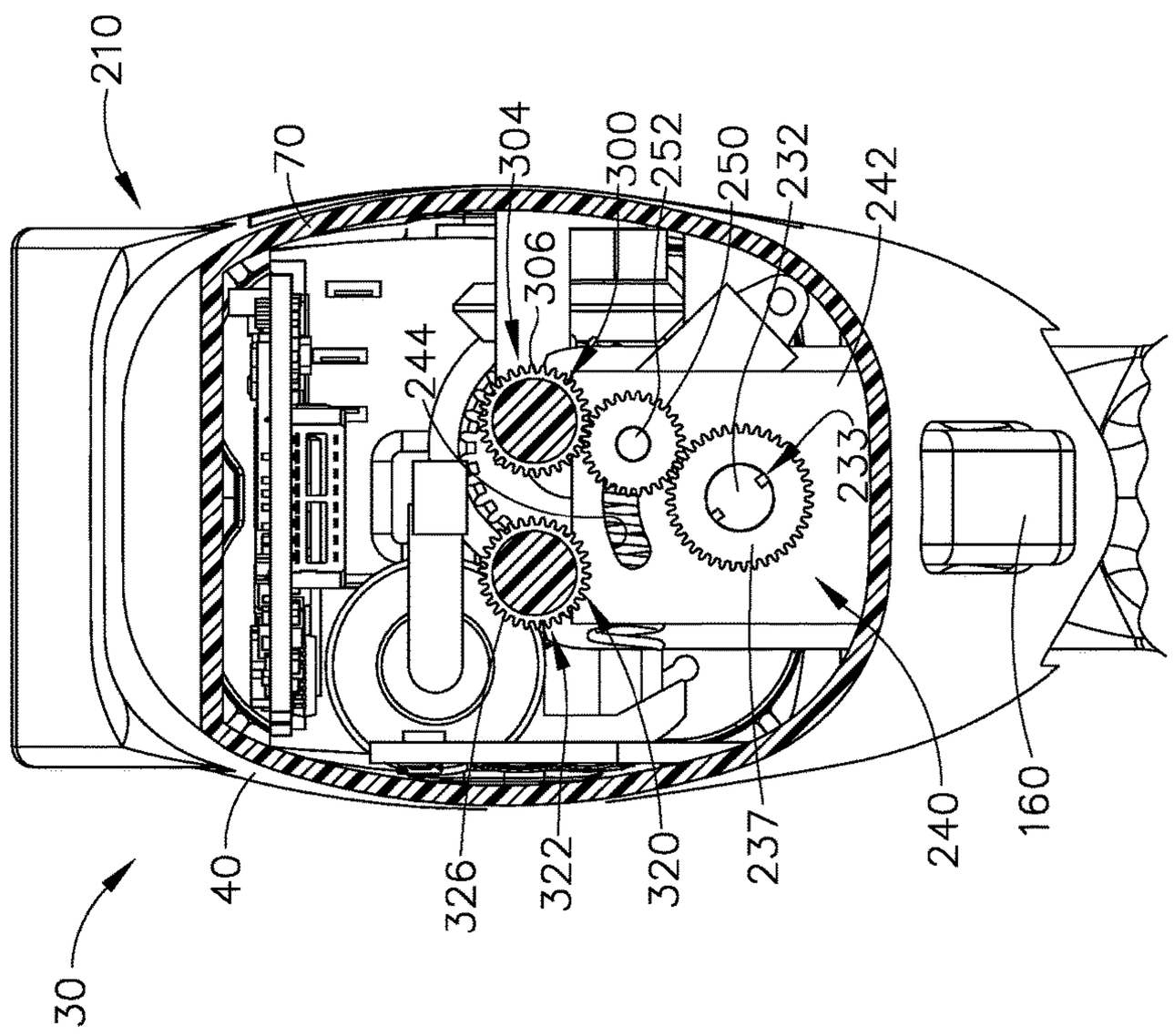
210
70
304
300
252
250
232
242
306
244
233
40
326
322
320
237
240
160
30

FIG. 6

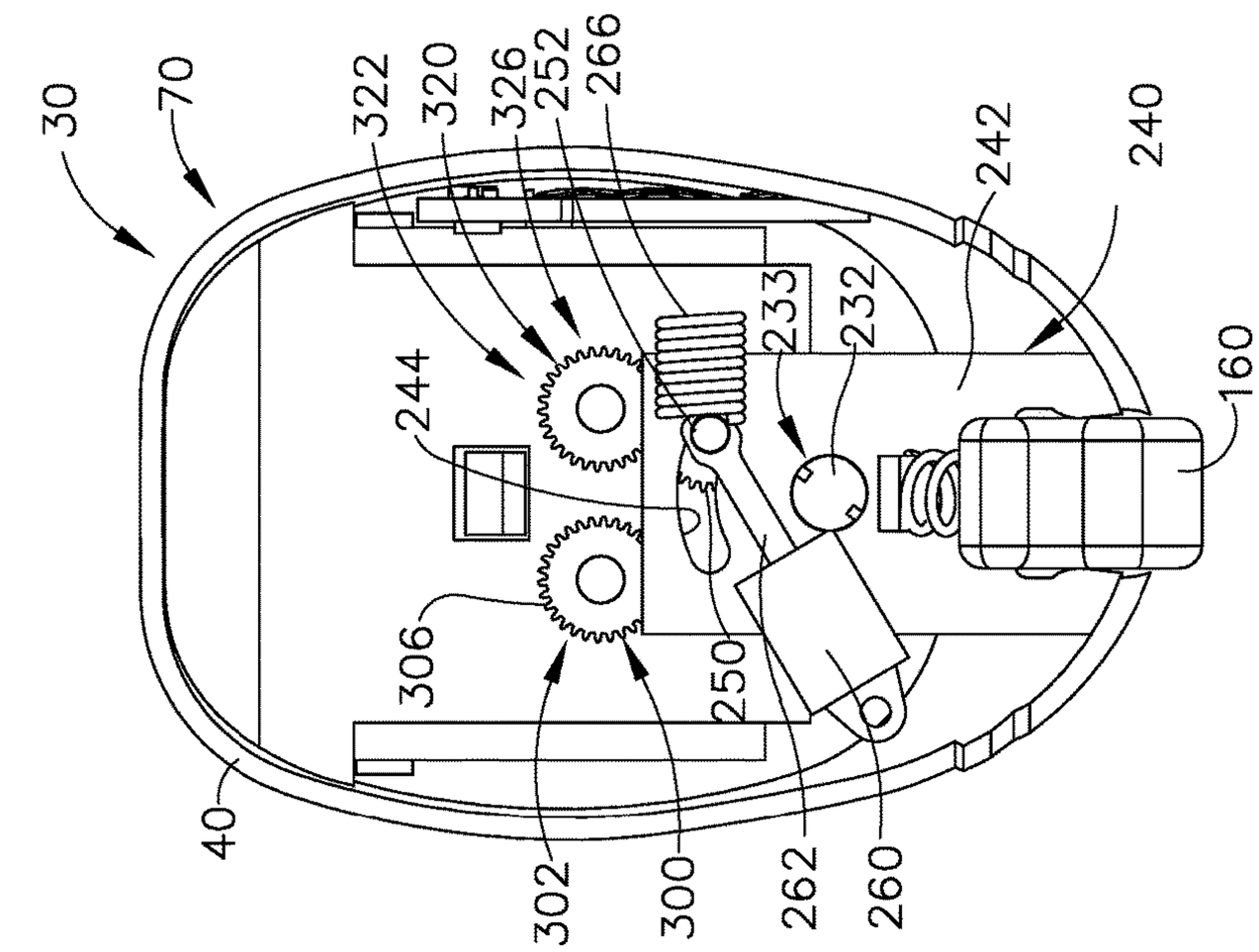
30
70
322
320
326
252
266
242
240
233
232
244
160
306
250
40
302
300
262
260

FIG. 9

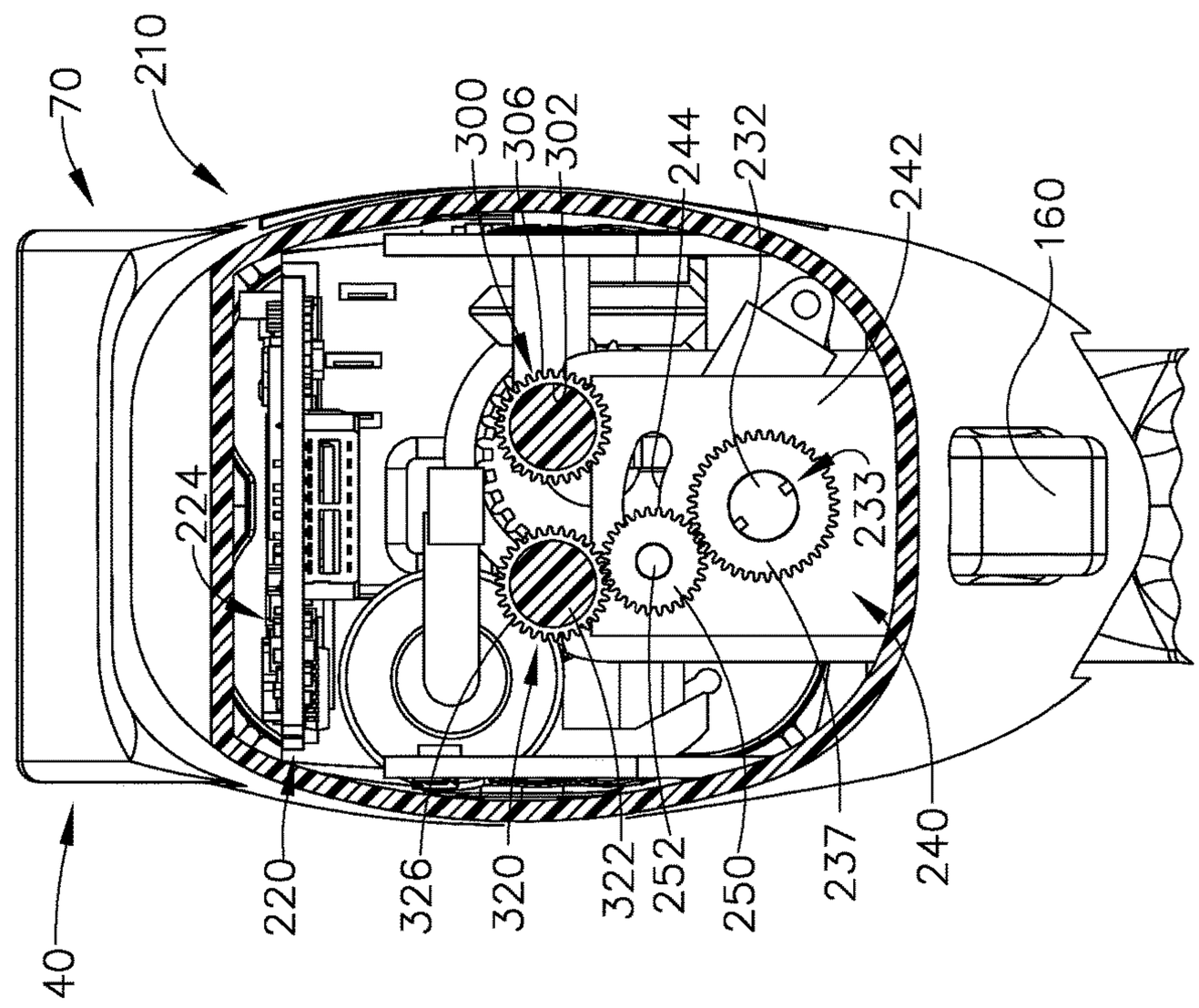
70
210
300
306
302
244
232
242
160
224
233
40
220
326
320
322
252
250
237
240

FIG. 8

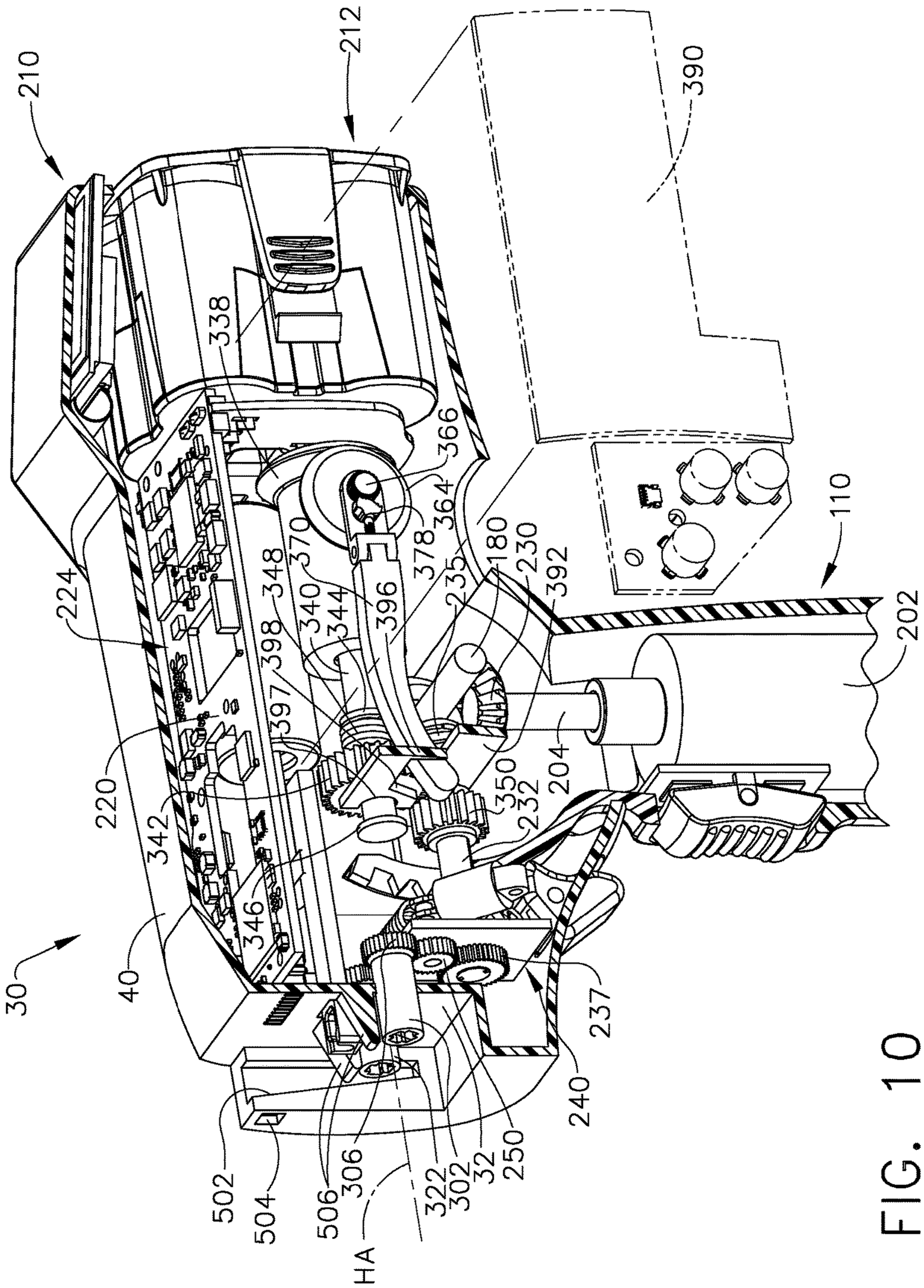
210
212
390
338
366
364
378
370
348
340
344
396
398
397
224
220
342
346
40
30
180
230
235
392
110
202
204
350
232
237
240
250
32
302
322
306
506
504
502
HA

FIG. 10

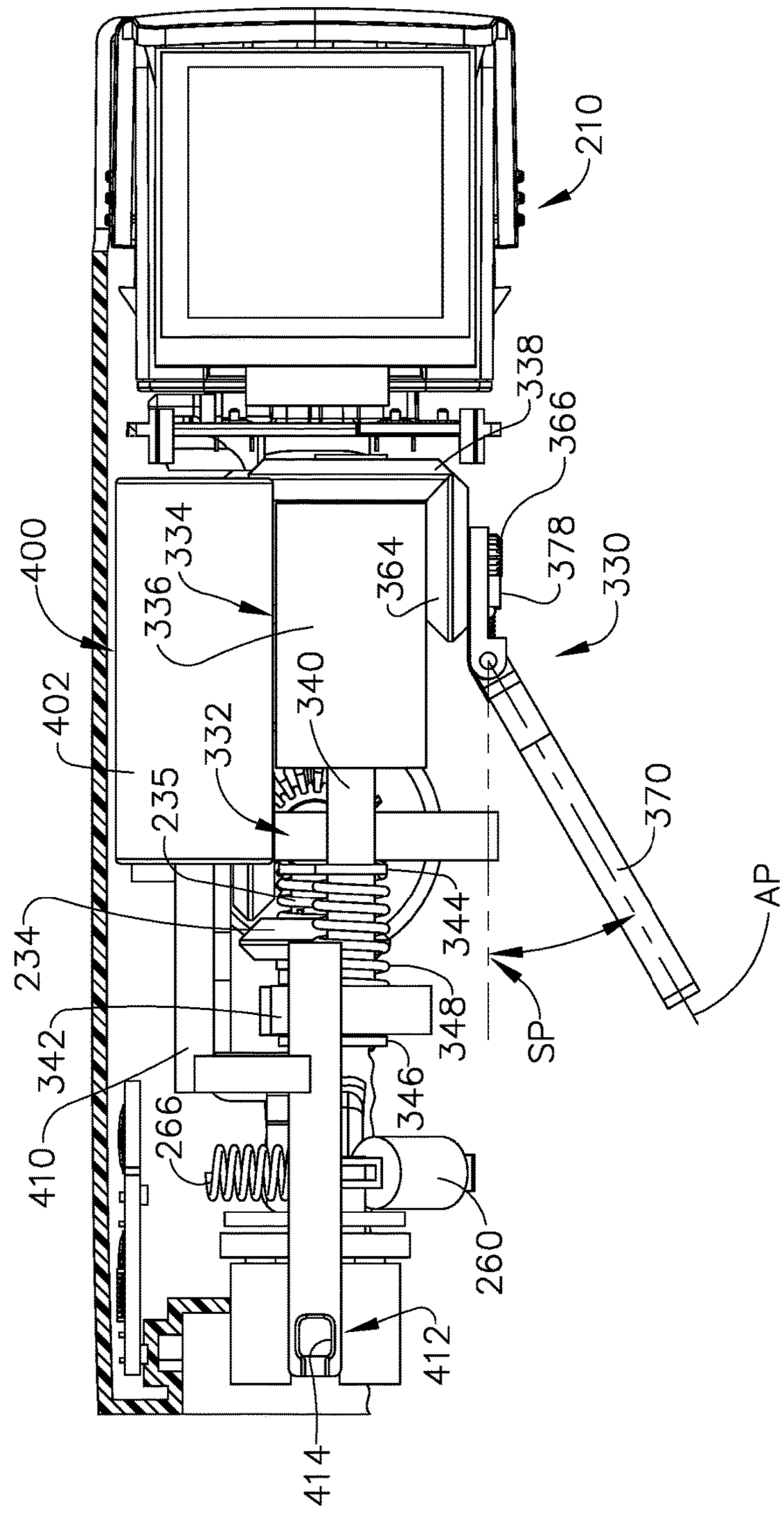
210
338
366
378
330
400
334
336
364
402
340
332
235
370
AP
234
344
348
SP
342
346
410
266
260
412
414

FIG. 11

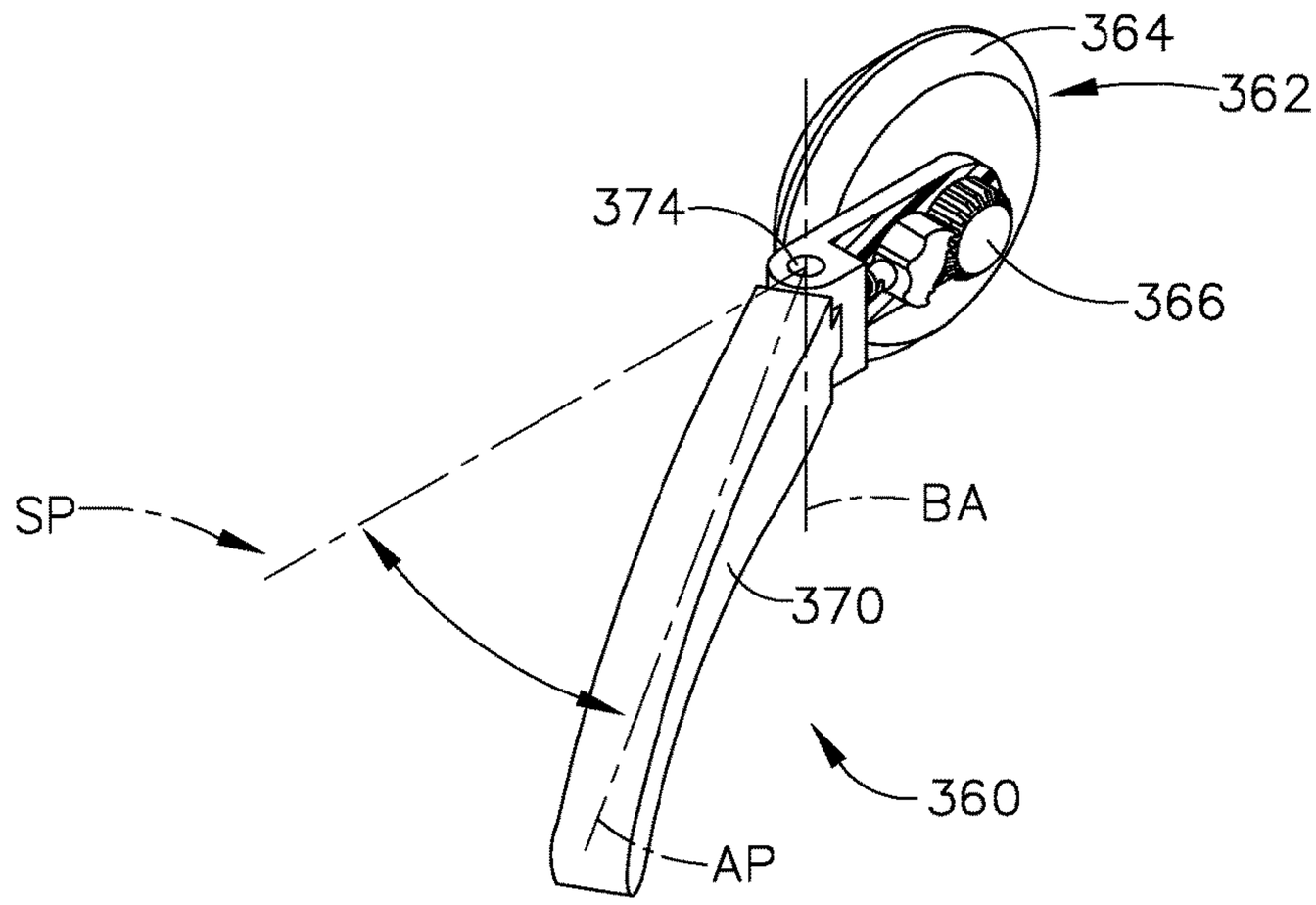
364
362
374
366
SP
BA
370
360
AP

FIG. 12

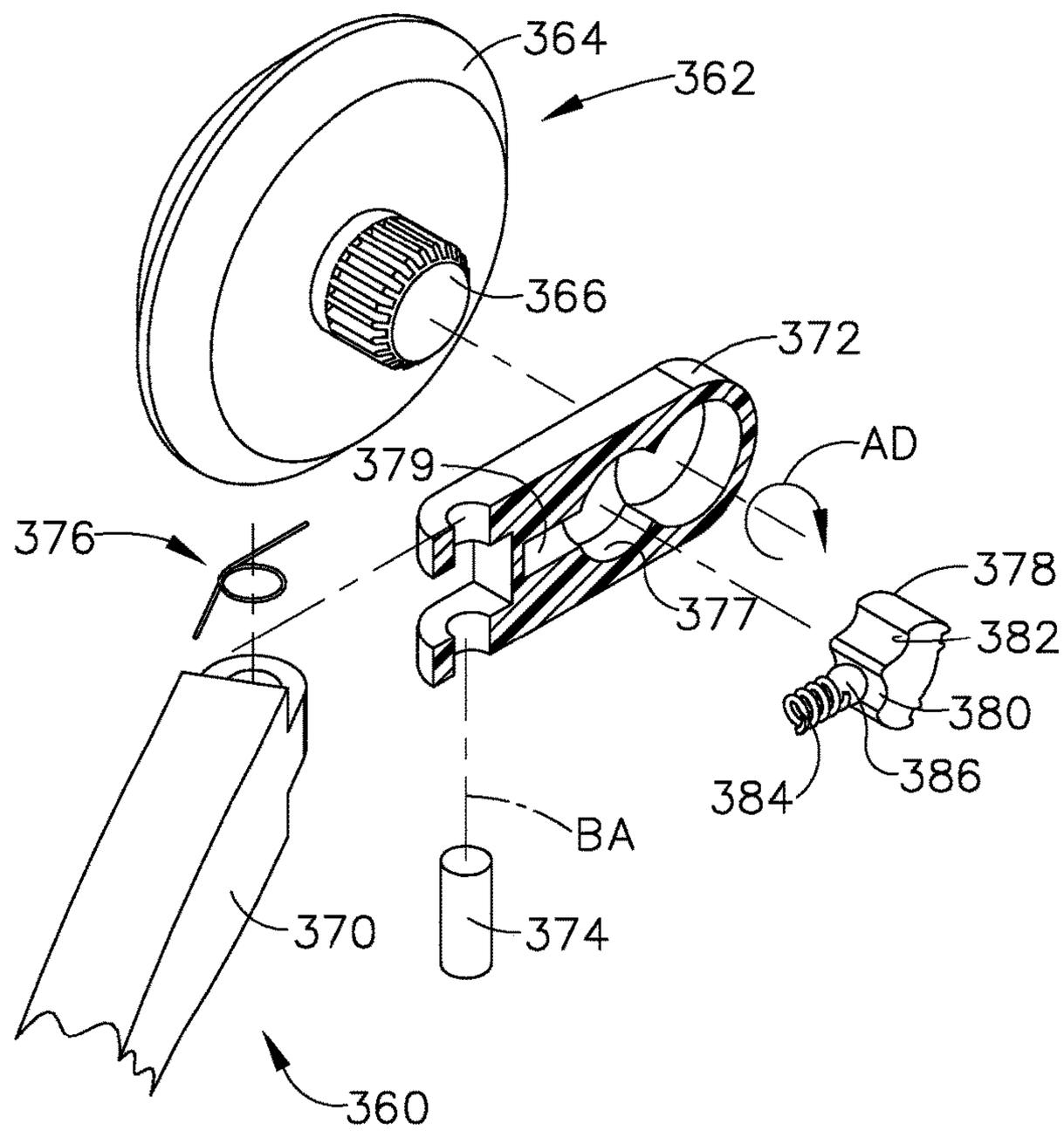
364
362
366
372
AD
379
376
378
377
382
380
384
386
BA
370
374
360

FIG. 13

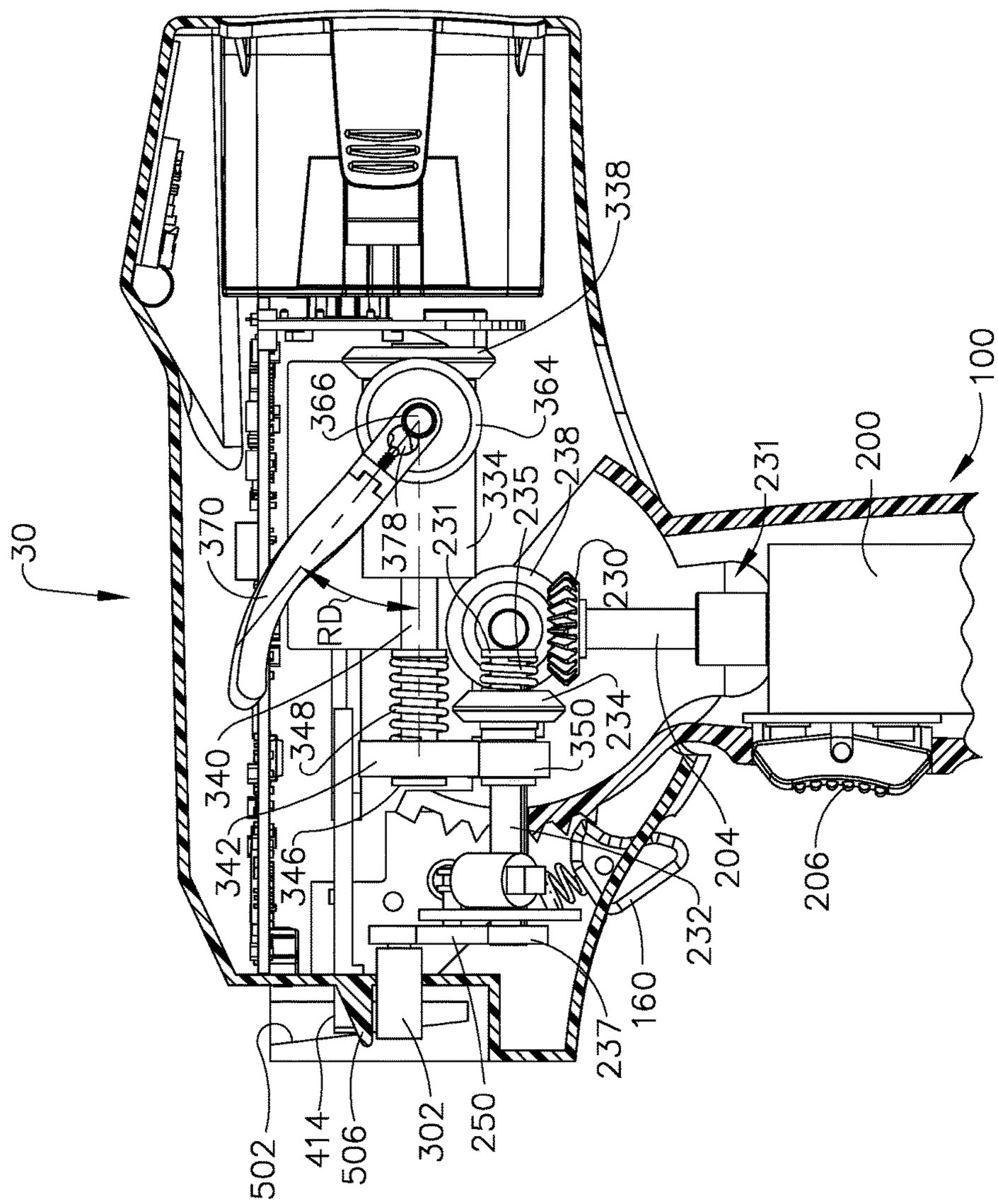
30
100
200
231
338
364
366
370
378
231
334
235
238
230
RD
340
348
342
346
350
234
204
206
232
160
237
502
414
506
302
250

FIG. 14

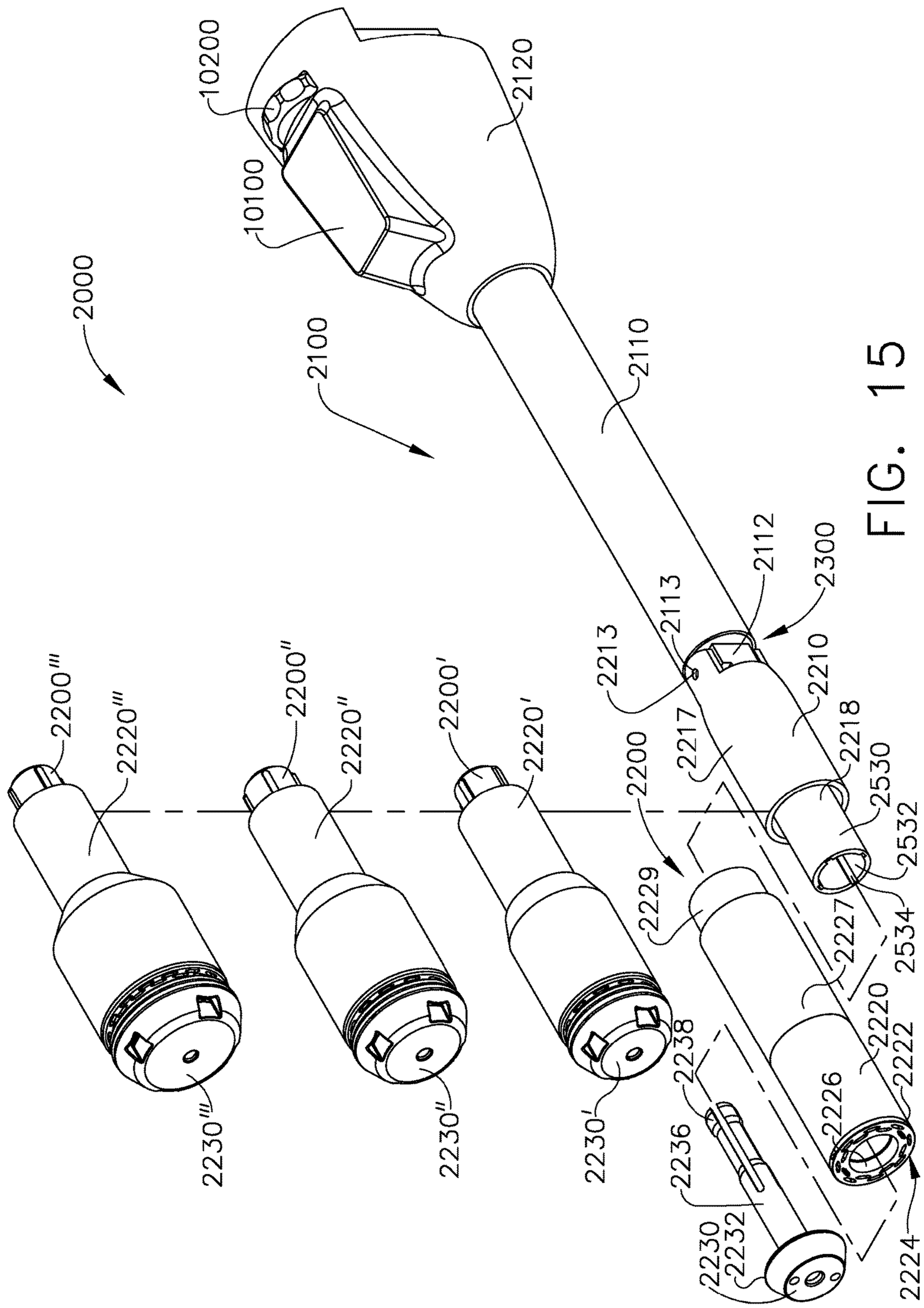
2000
2100
10200
10100
2120
2110
2112
2300
2113
2213
2210
2217
2218
2530
2532
2534
2227
2220
2222
2224
2226
2200
2229
2238
2236
2230
2232
2200'''
2220'''
2230'''
2200''
2220''
2230''
2200'
2220'
2230'

FIG. 15

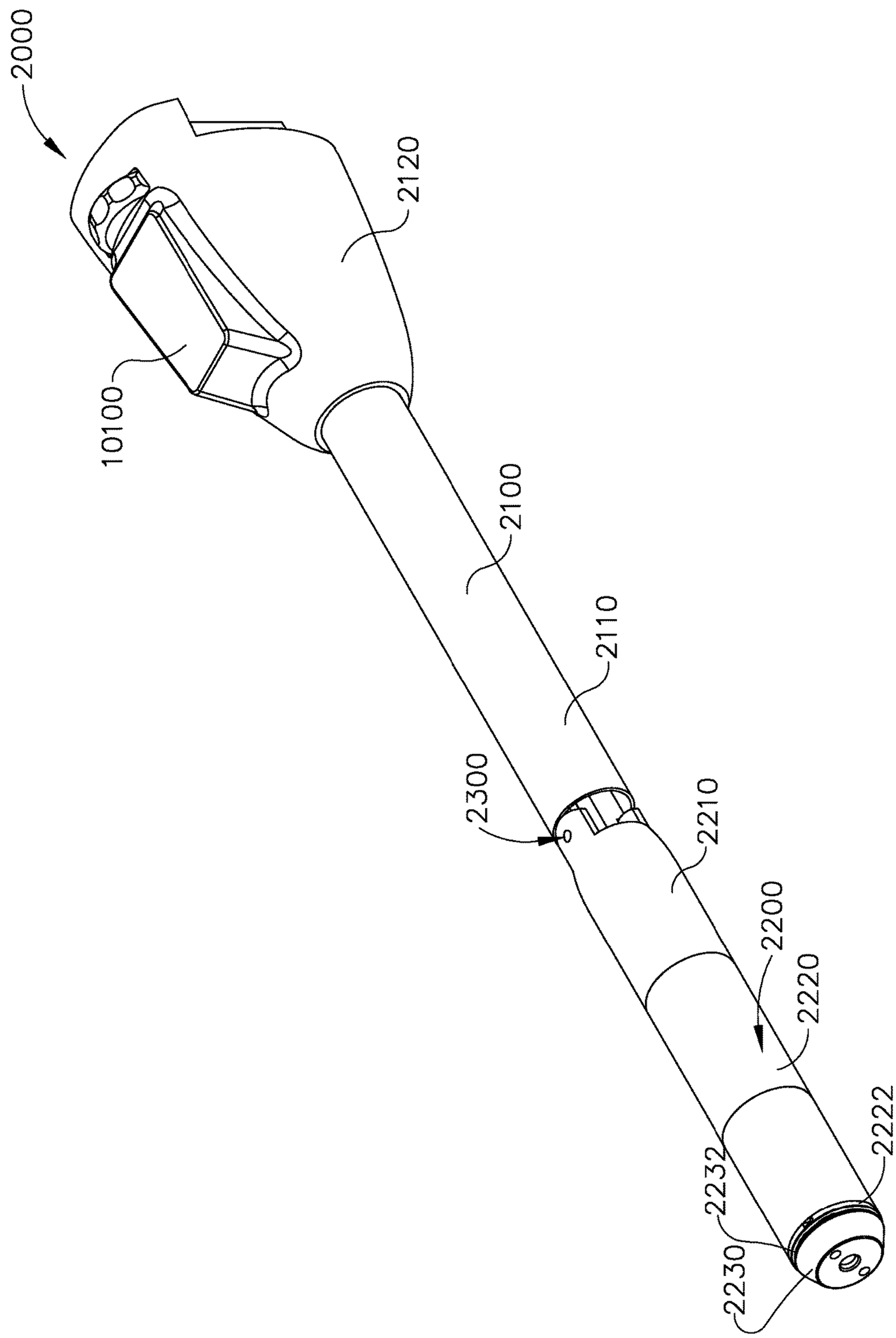

FIG. 16

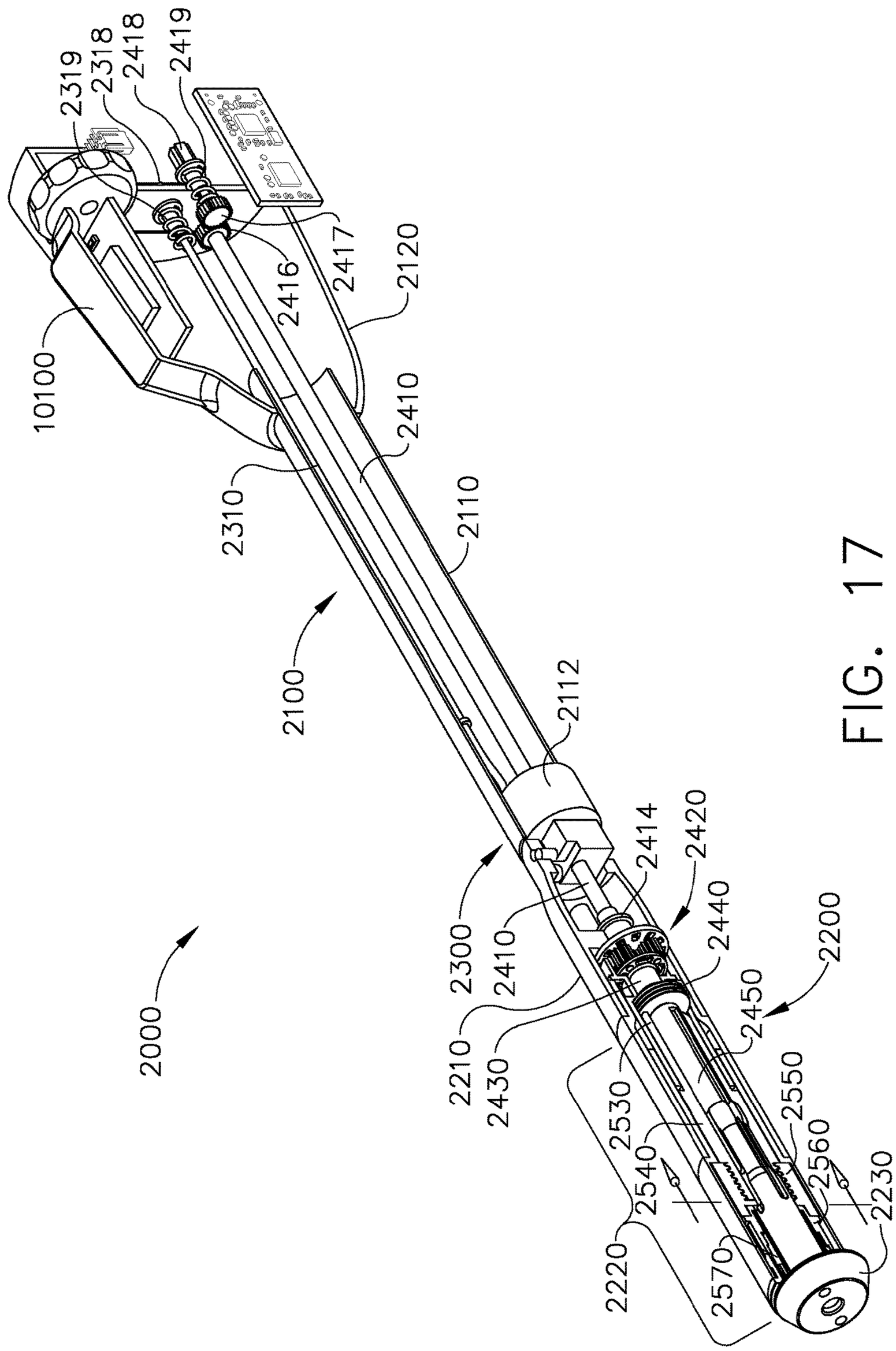
2319
2318
2418
2419
10100
2416
2417
2120
2410
2310
2110
2100
2112
2414
2420
2300
2410
2440
2200
2000
2210
2430
2450
2530
2550
2540
2560
2230
2220
2570

FIG. 17

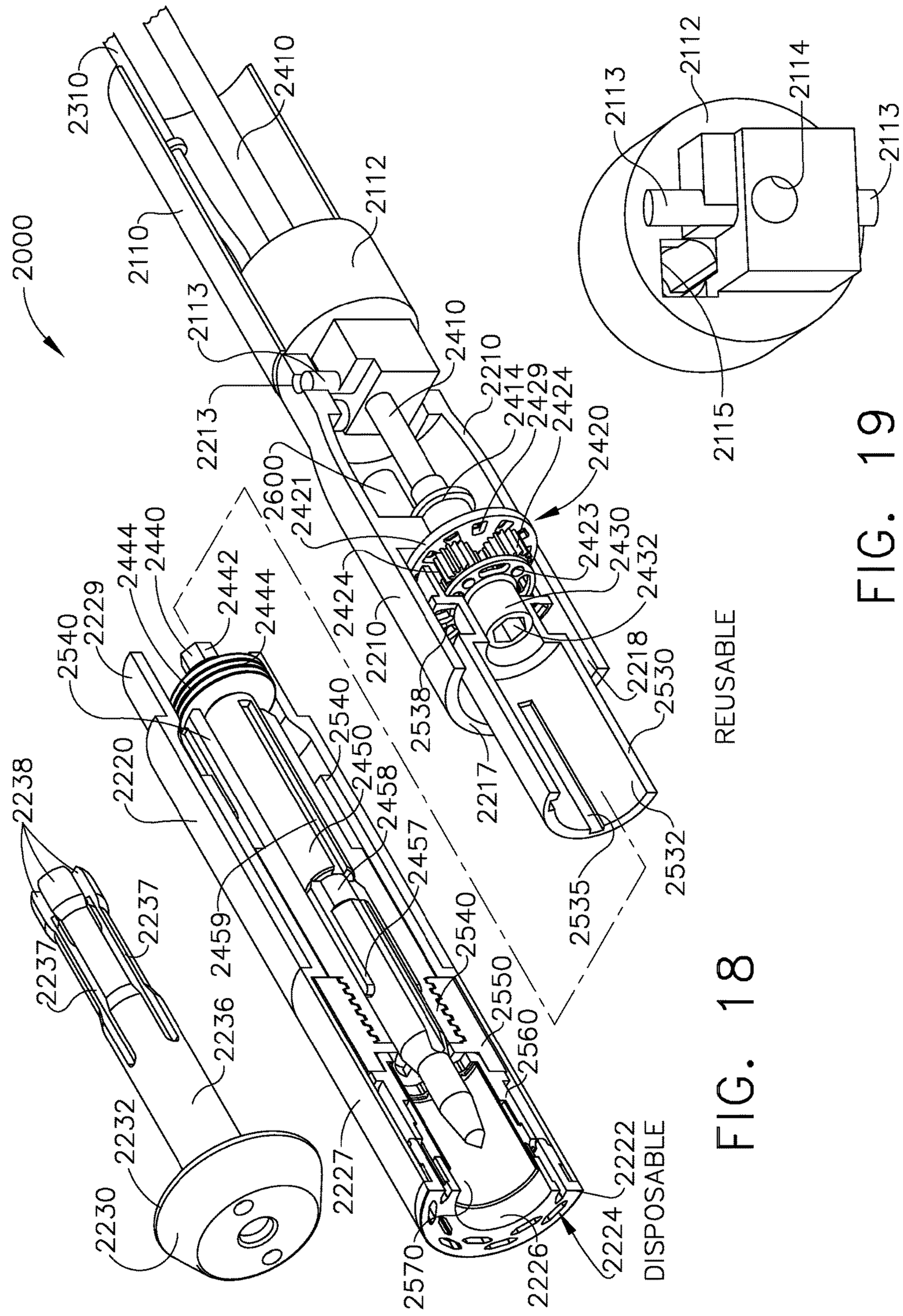
2000
2310
2410
2112
2110
2113
2410
2210
2213
2414
2429
2424
2420
2600
2421
2423
2430
2432
2424
2210
2218
2530
2538
2217
2532
2535
2540
2550
2560
2570
2226
2224
2222
DISPOSABLE
2227
2230
2232
2236
2237
2237
2238
2220
2540
2229
2444
2440
2442
2444
2459
2457
2458
2450
2540
2112
2113
2114
2113
2115
REUSABLE

FIG. 19

FIG. 18

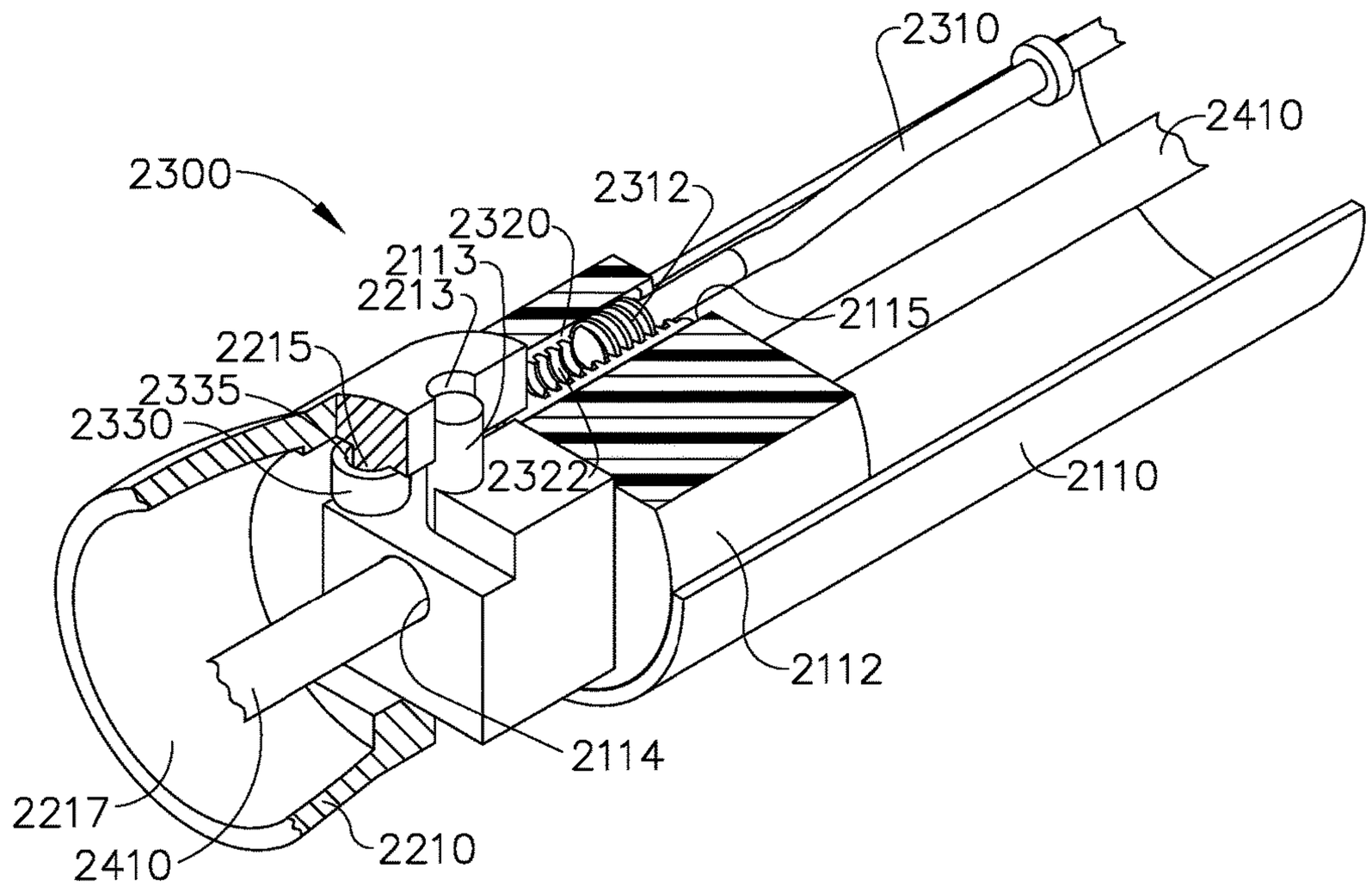
2310
2410
2300
2312
2320
2113
2213
2115
2215
2335
2330
2322
2110
2112
2114
2217
2410
2210

FIG. 20

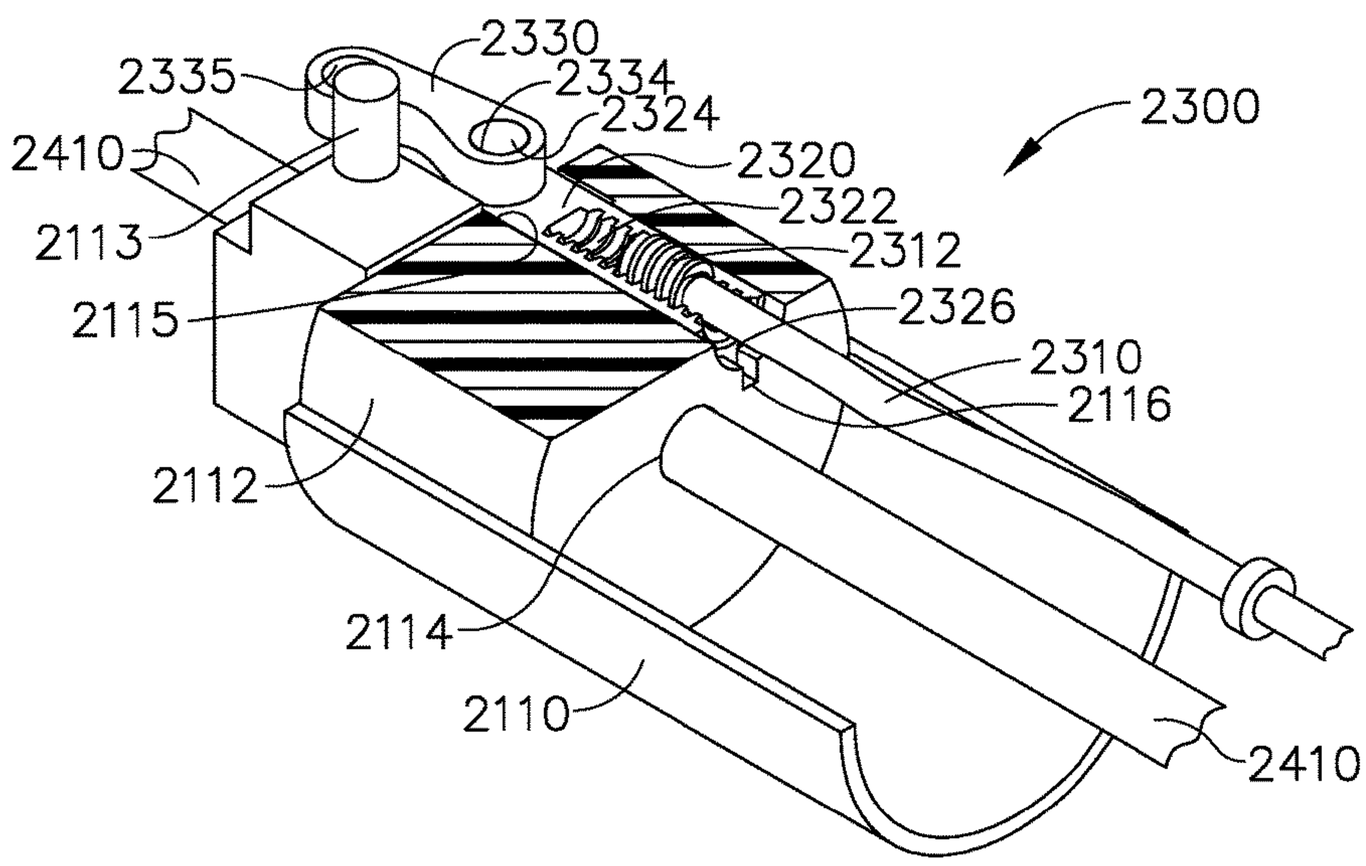
2330
2335
2334
2324
2300
2410
2320
2322
2113
2312
2115
2326
2310
2116
2112
2114
2110
2410

FIG. 21

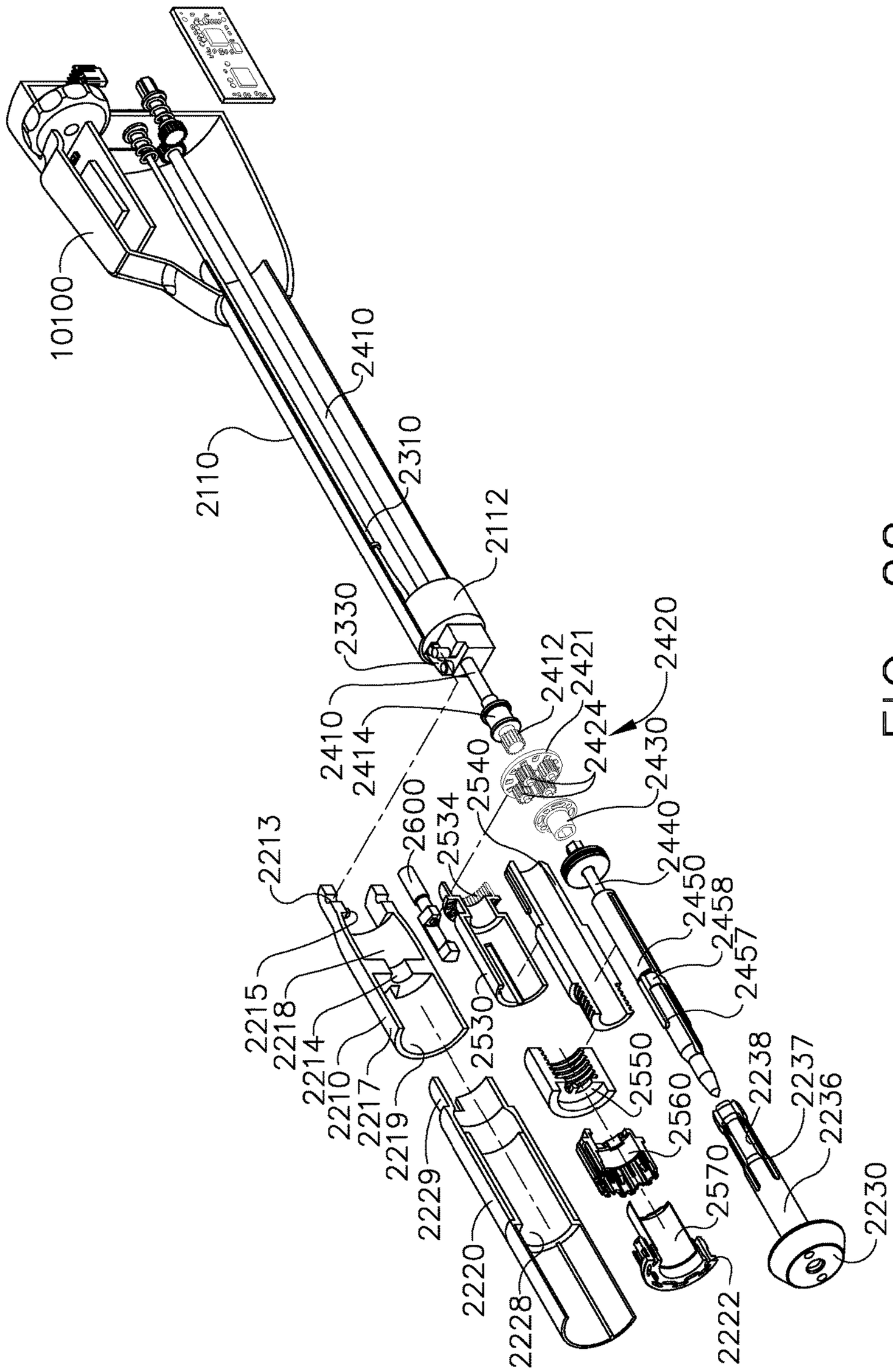
1010100
2410
2110
2310
2112
2330
2410
2414
2412
2421
2420
2424
2430
2440
2450
2458
2457
2540
2534
2600
2213
2215
2218
2214
2210
2217
2219
2229
2220
2228
2530
2550
2560
2570
2222
2238
2237
2236
2230

FIG. 22

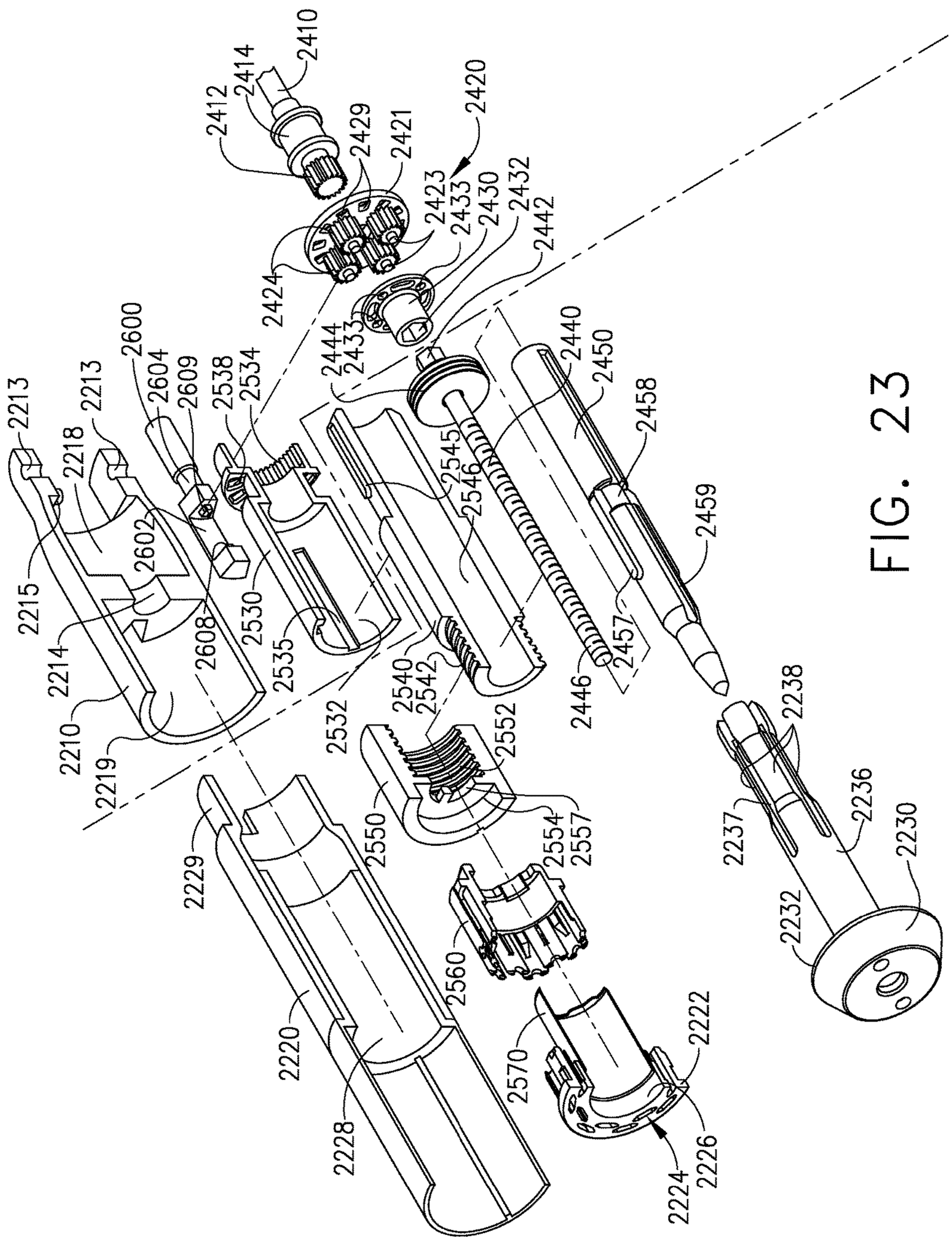
2410
2414
2412
2429
2421
2420
2423
2433
2430
2432
2442
2424
2444
2433
2440
2450
2458
2459
2457
2446
2545
2546
2600
2604
2609
2538
2534
2213
2218
2213
2215
2214
2210
2219
2602
2608
2530
2535
2532
2540
2542
2552
2550
2554
2557
2229
2560
2570
2220
2228
2222
2226
2224
2238
2237
2236
2230
2232

FIG. 23

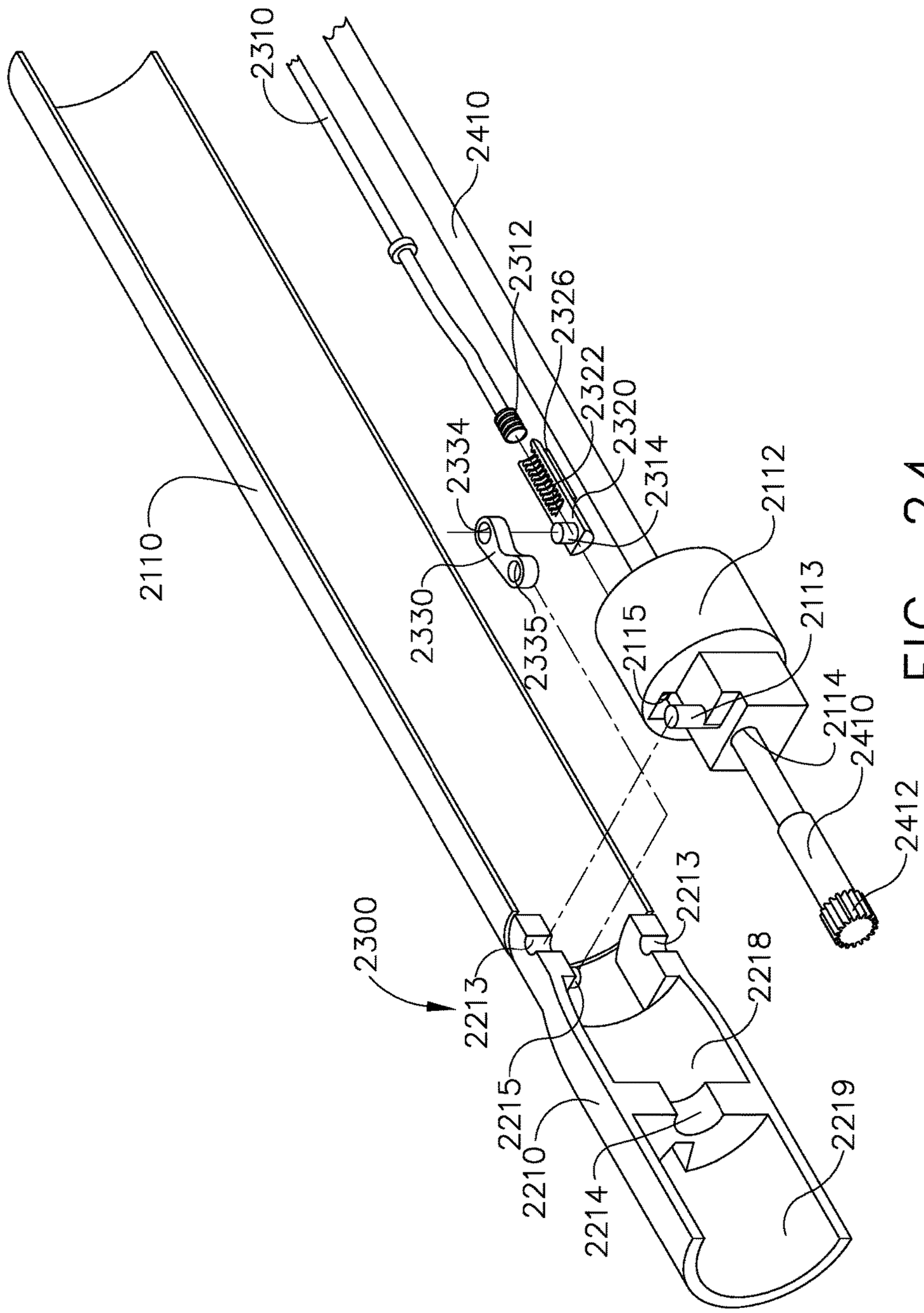
2310
2410
2312
2326
2322
2320
2314
2334
2330
2335
2110
2112
2113
2115
2114
2410
2412
2300
2213
2218
2215
2210
2214
2219

FIG. 24

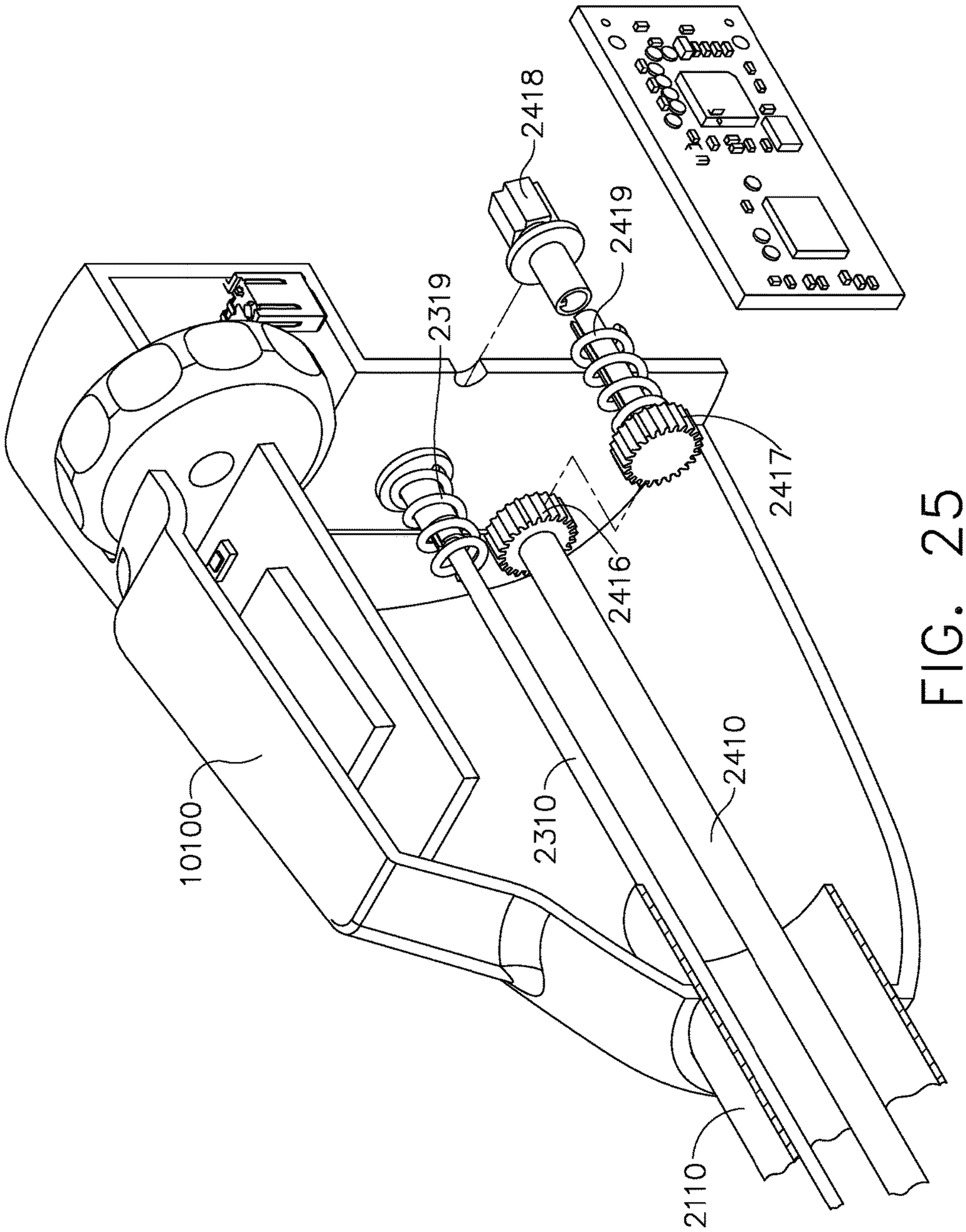

FIG. 25

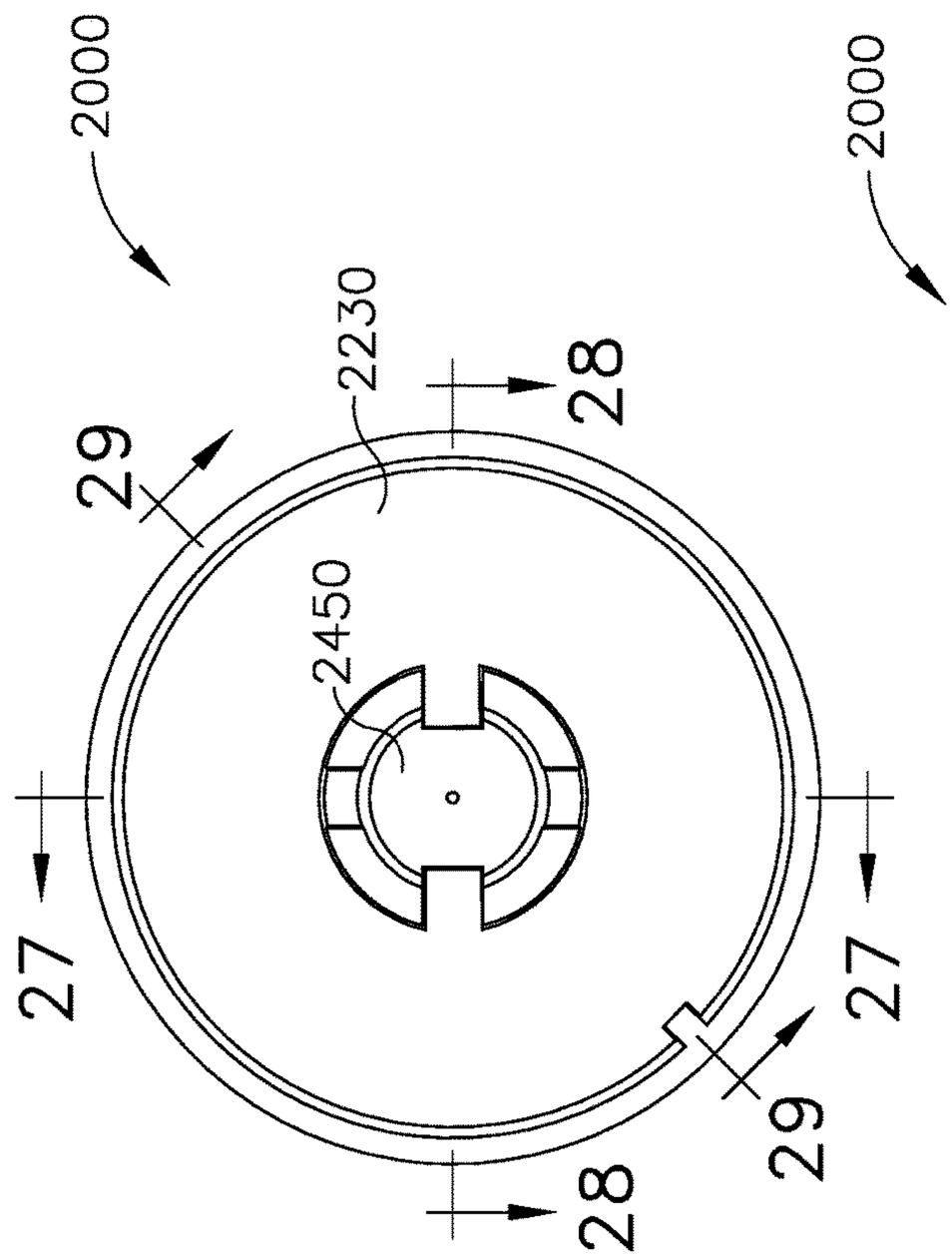
2000
2230
28
29
2450
27
27
29
28

FIG. 26

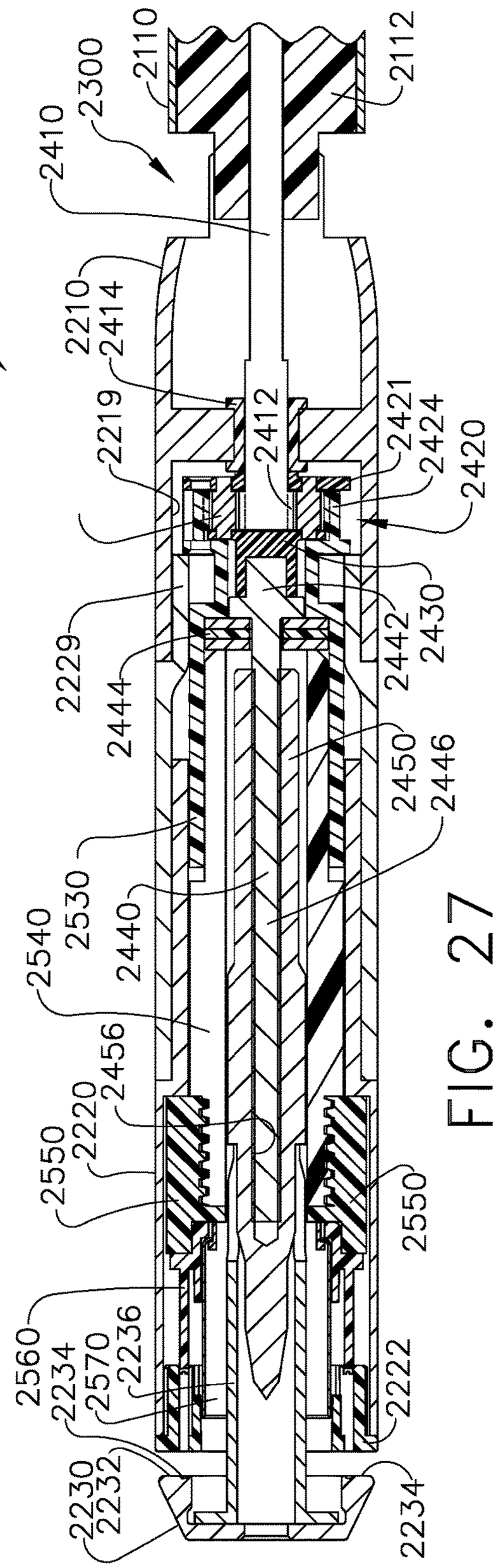
2000
2110
2300
2112
2410
2210
2414
2219
2412
2421
2424
2420
2229
2444
2442
2430
2450
2446
2530
2440
2540
2456
2220
2550
2550
2560
2234
2570
2236
2222
2230
2232
2234

FIG. 27

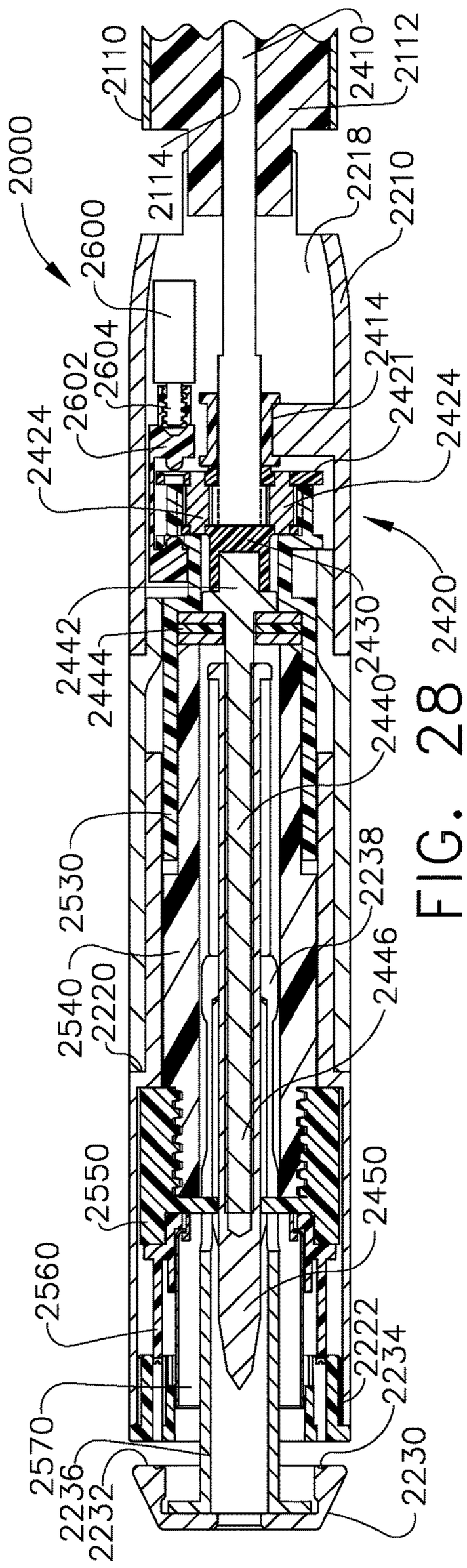
2000
2110
2410
2112
2114
2218
2210
2600
2604
2602
2414
2421
2424
2420
2442
2444
2430
2440
2530
2238
2446
2540
2220
2550
2450
2560
2222
2234
2570
2236
2232
2230

FIG. 28

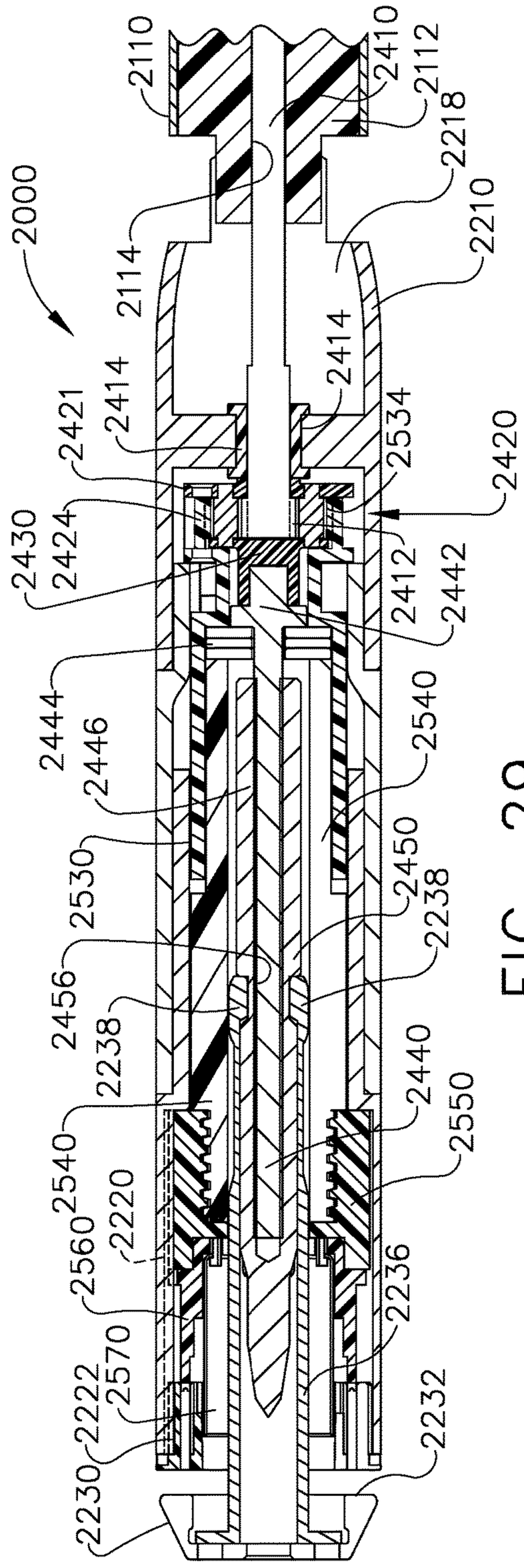
2000
2110
2410
2112
2218
2210
2114
2414
2421
2534
2420
2430
2424
2412
2442
2444
2446
2540
2530
2450
2238
2456
2440
2550
2560
2220
2236
2570
2222
2232
2230

FIG. 29

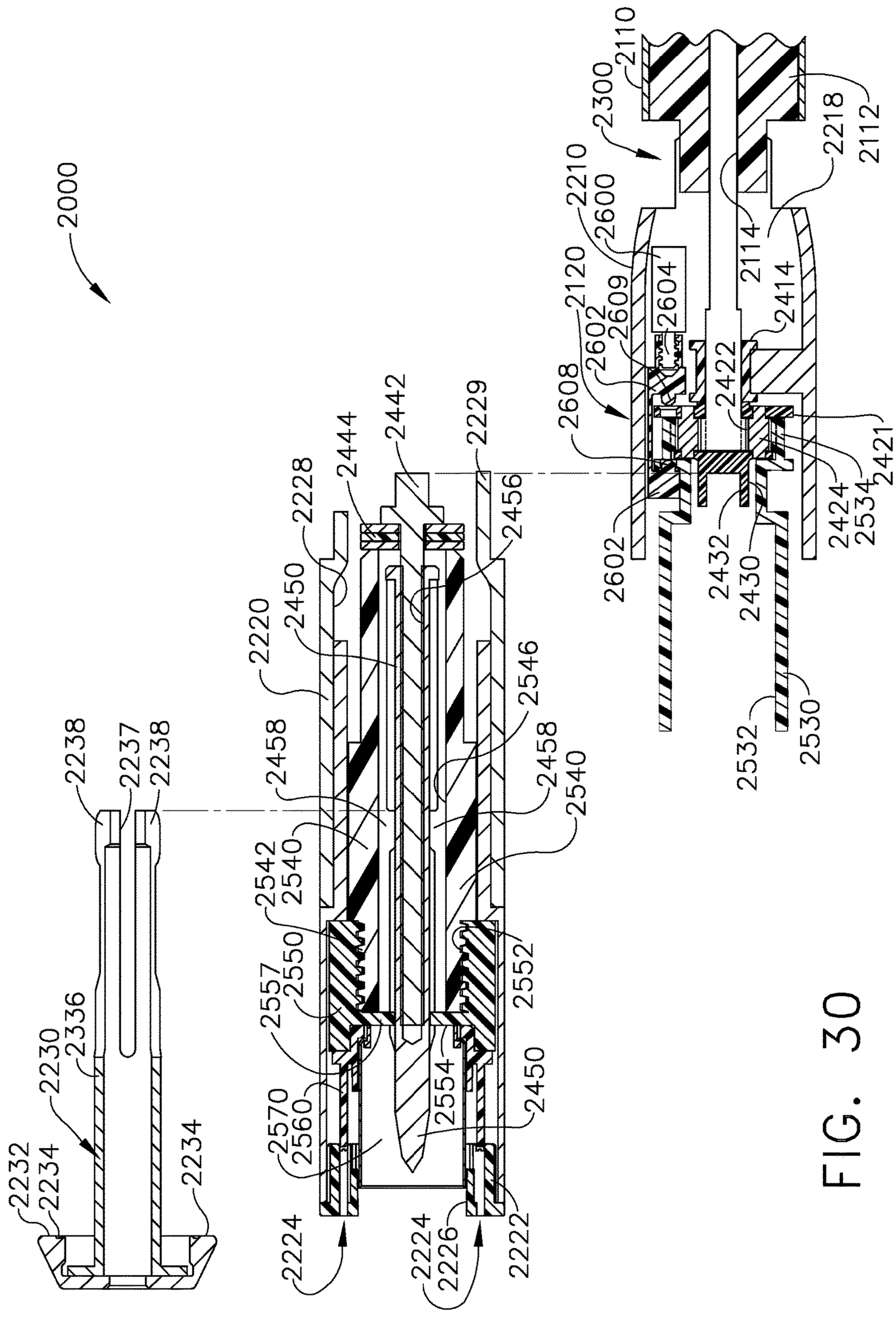
2000
2110
2300
2210
2600
2120
2604
2609
2602
2608
2218
2112
2114
2414
2422
2421
2424
2534
2432
2430
2530
2532
2229
2444
2442
2228
2456
2450
2220
2546
2458
2540
2542
2540
2550
2557
2552
2554
2450
2570
2560
2224
2226
2222
2238
2237
2238
2230
2336
2232
2234
2234

FIG. 30

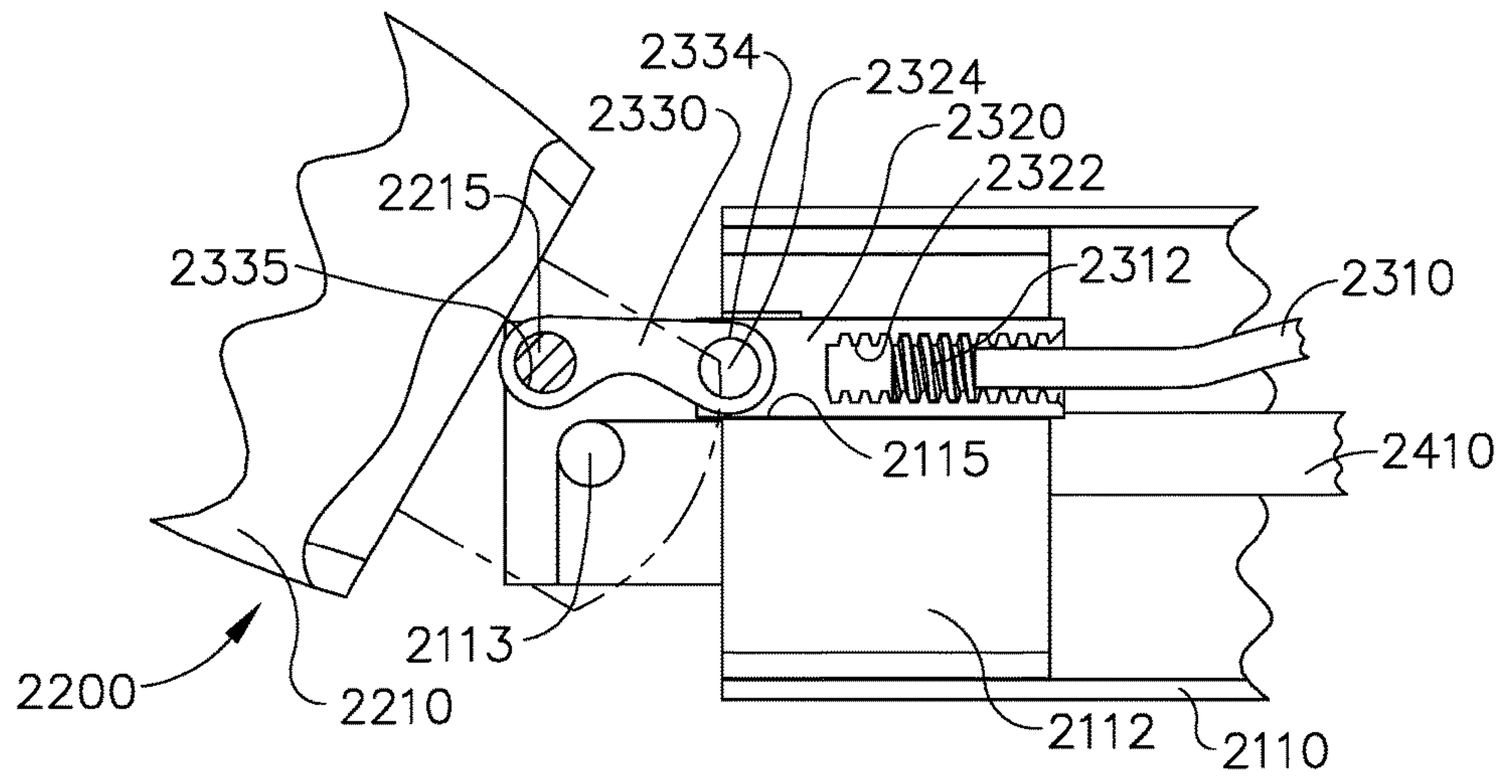
2334
2324
2330
2320
2322
2215
2335
2312
2310
2115
2410
2113
2200
2210
2112
2110

FIG. 31

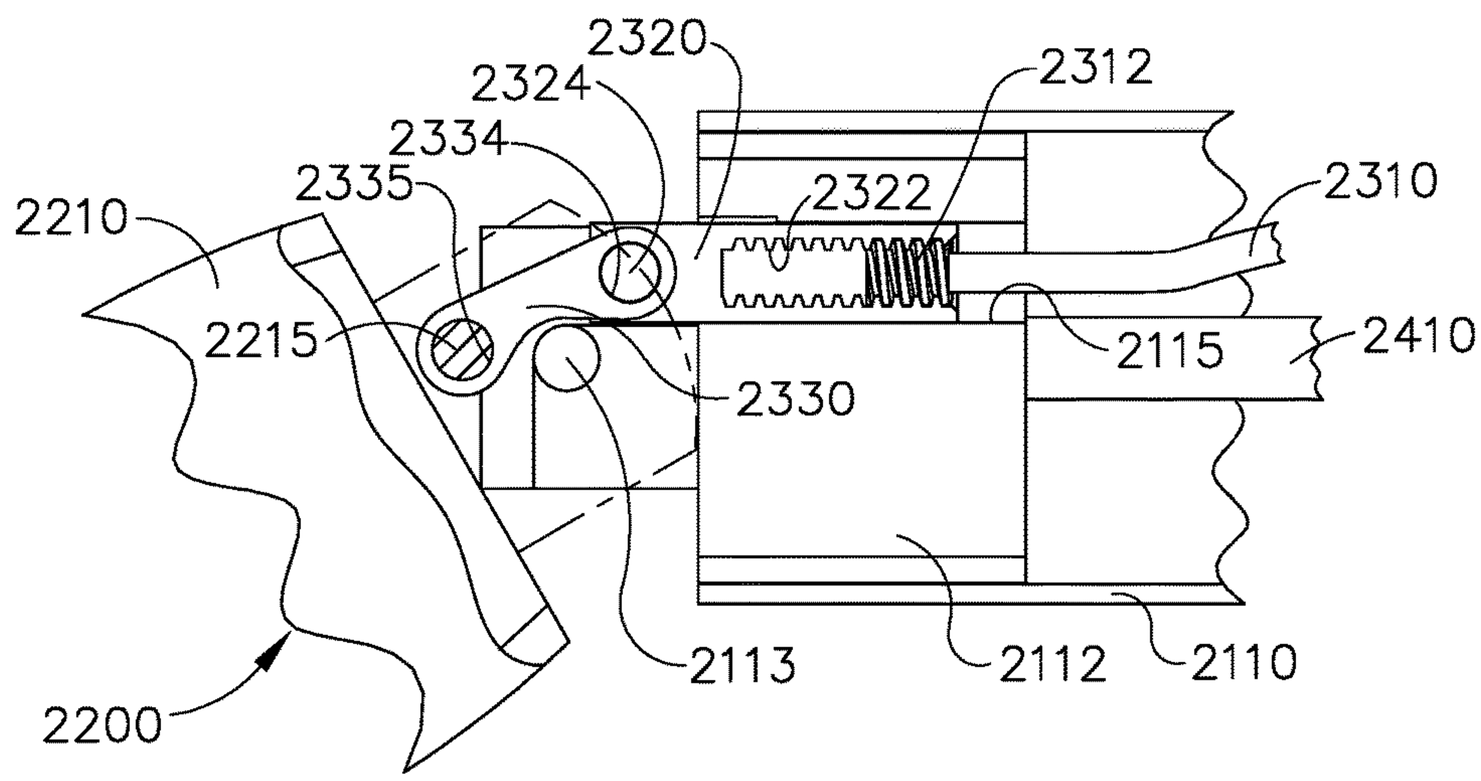
2320
2324
2312
2334
2335
2322
2310
2210
2215
2115
2410
2330
2113
2112
2110
2200

FIG. 32

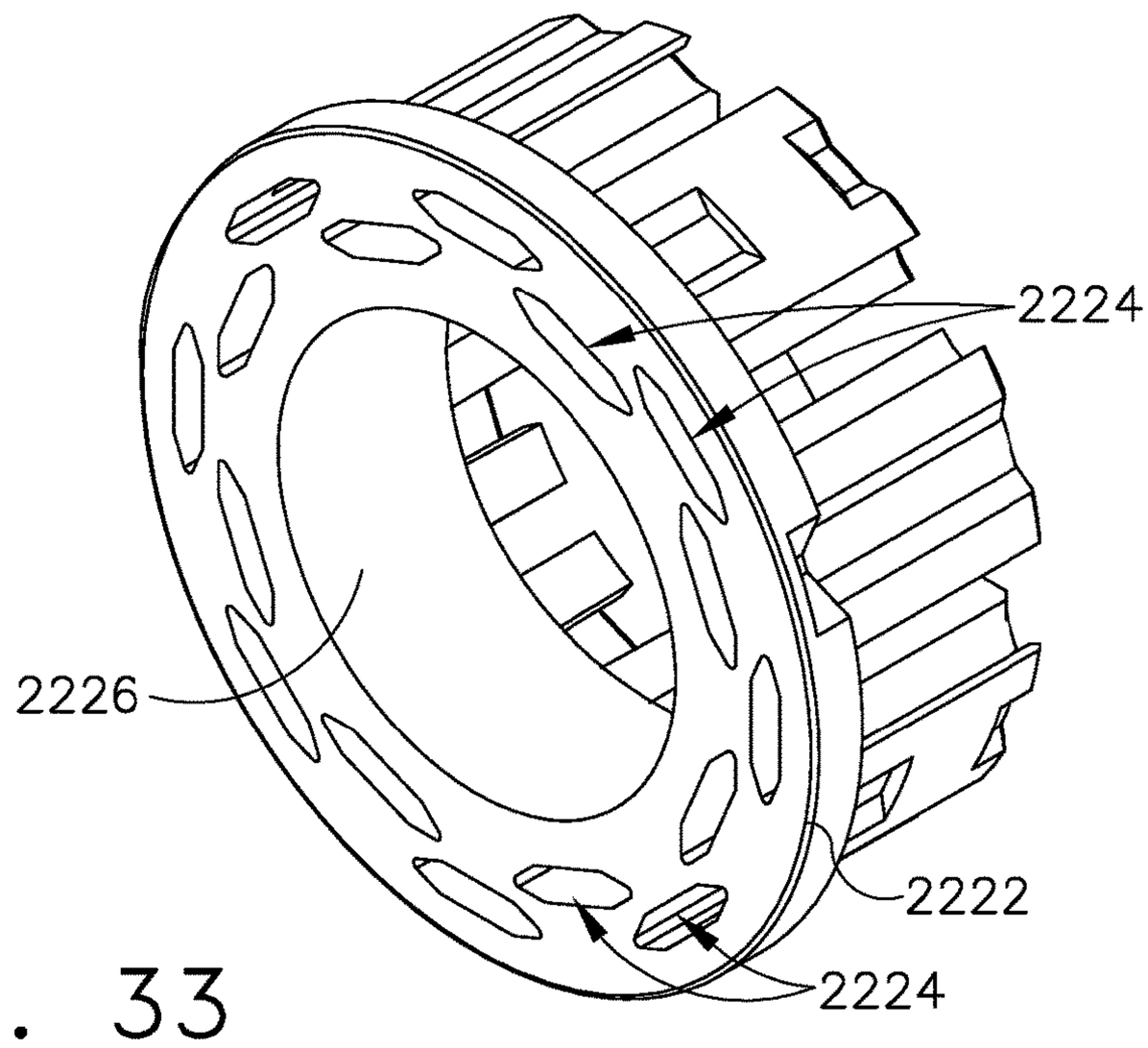

FIG. 33

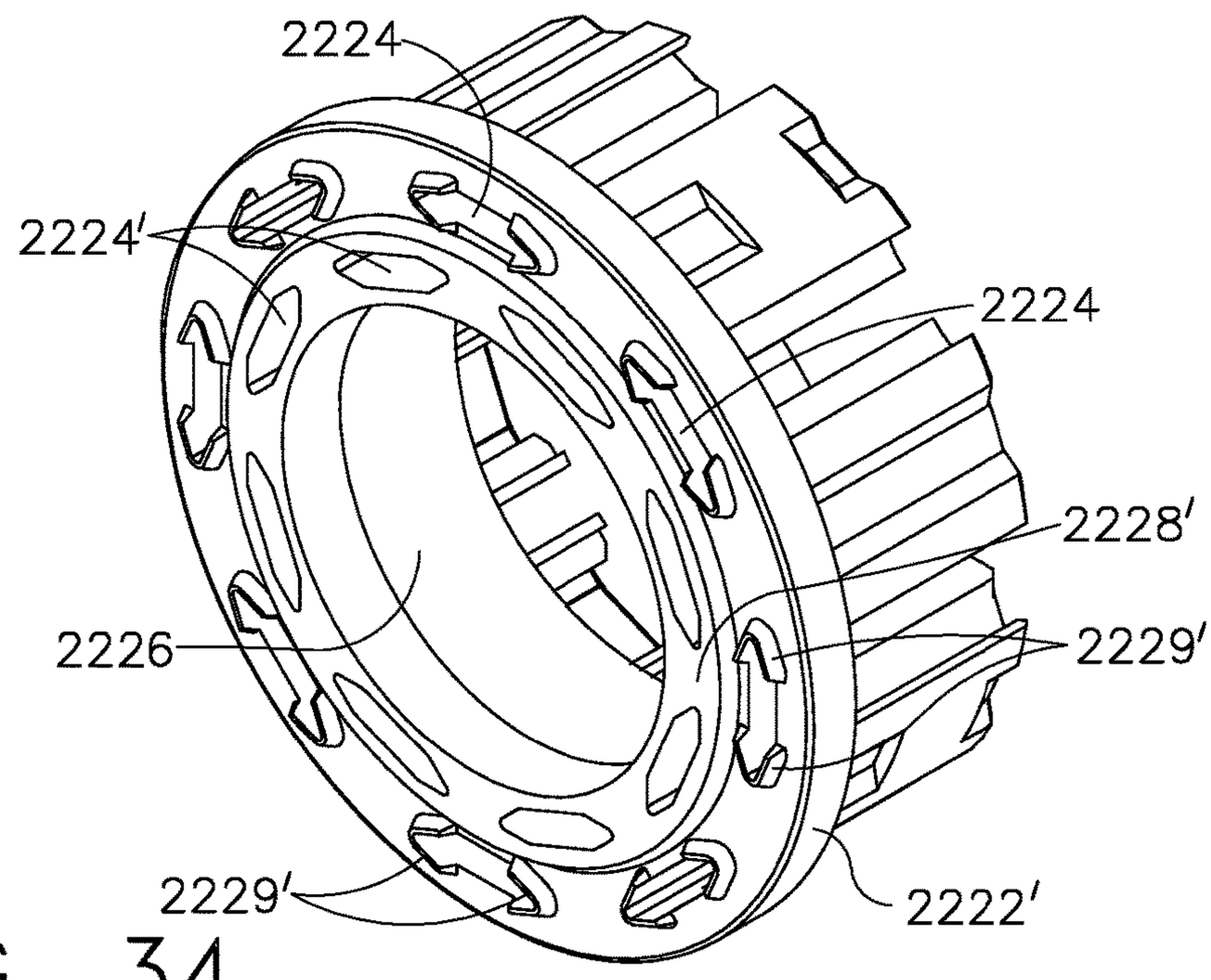

FIG. 34

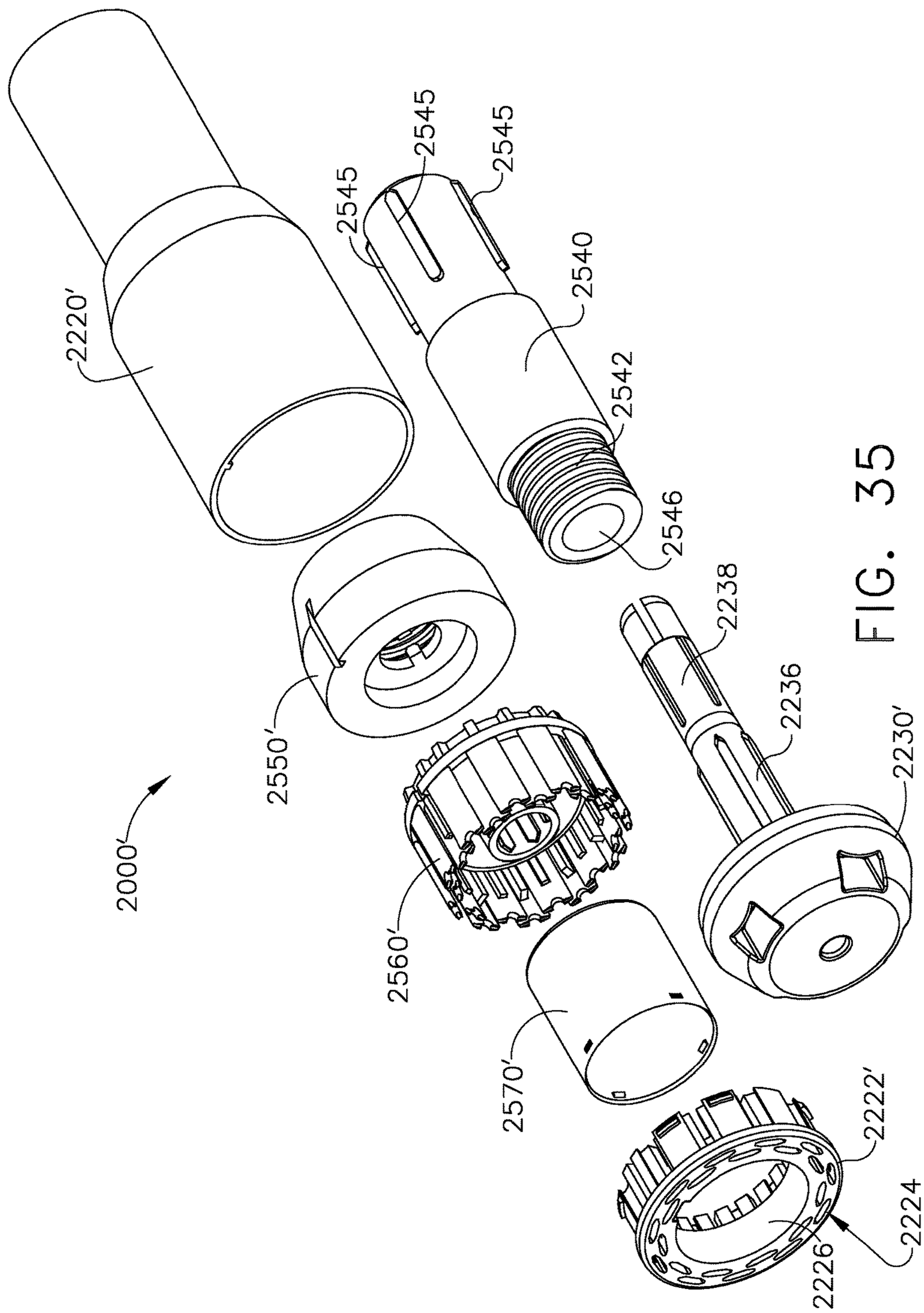
2000'
2220'
2545
2545
2545
2540
2542
2546
2550'
2238
2236
2230'
2560'
2570'
2222'
2224
2226

FIG. 35

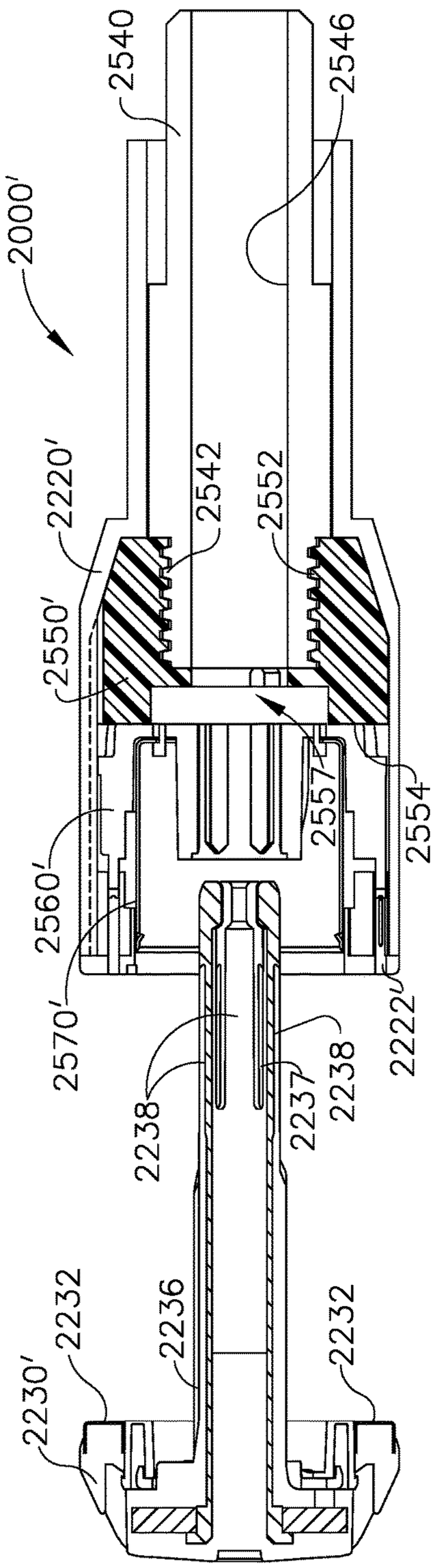
2000'
2540
2546
2220'
2542
2552
2550'
2557
2554
2560'
2570'
2222'
2238
2237
2238
2232
2236
2232
2230'

FIG. 36

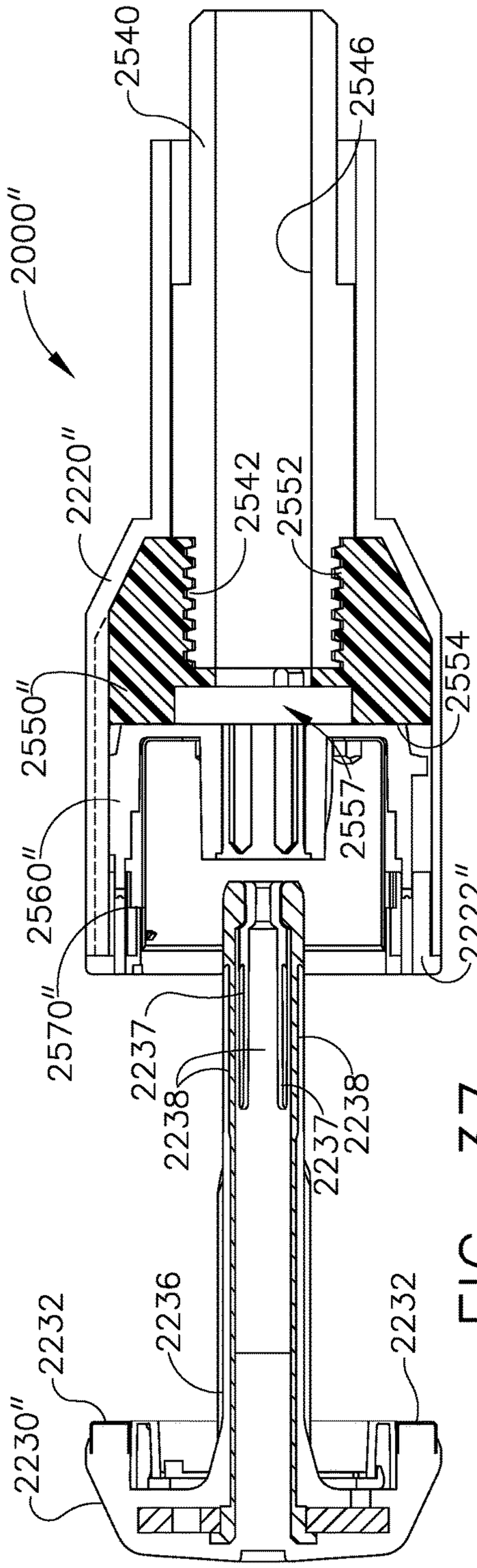
2000''
2540
2546
2220''
2542
2552
2550''
2554
2557
2560''
2222''
2570''
2237
2238
2237
2238
2232
2236
2232
2230''

FIG. 37

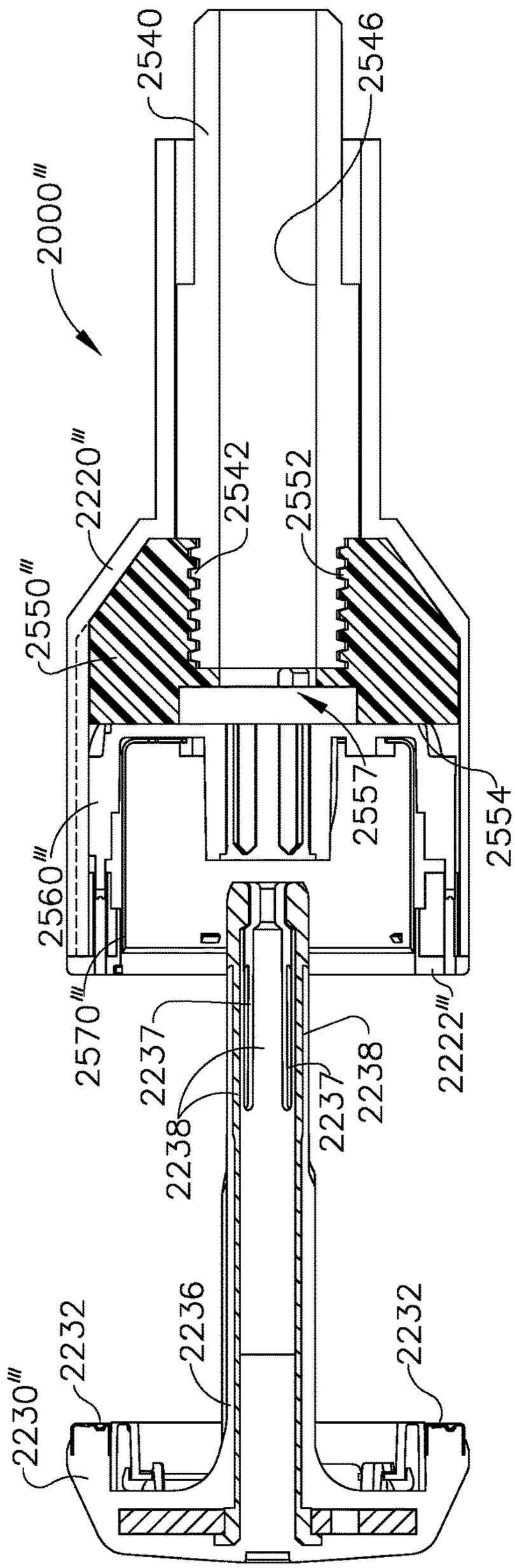
2000'''
2540
2546
2220'''
2542
2552
2550'''
2557
2554
2560'''
2570'''
2237
2238
2237
2238
2222'''
2236
2232
2232
2230'''

FIG. 38

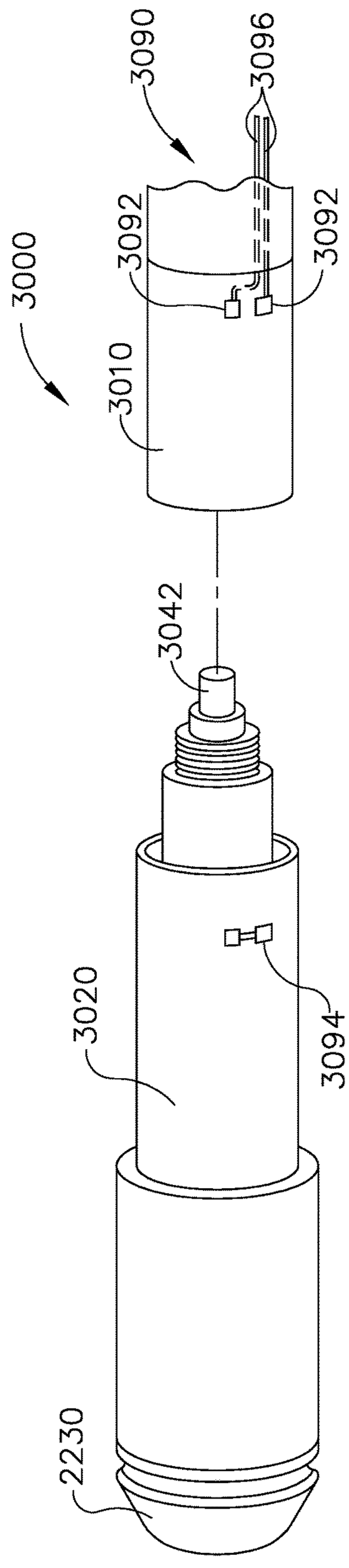
3000
3010
3090
3092
3092
3096
3042
3020
3094
2230

FIG. 39

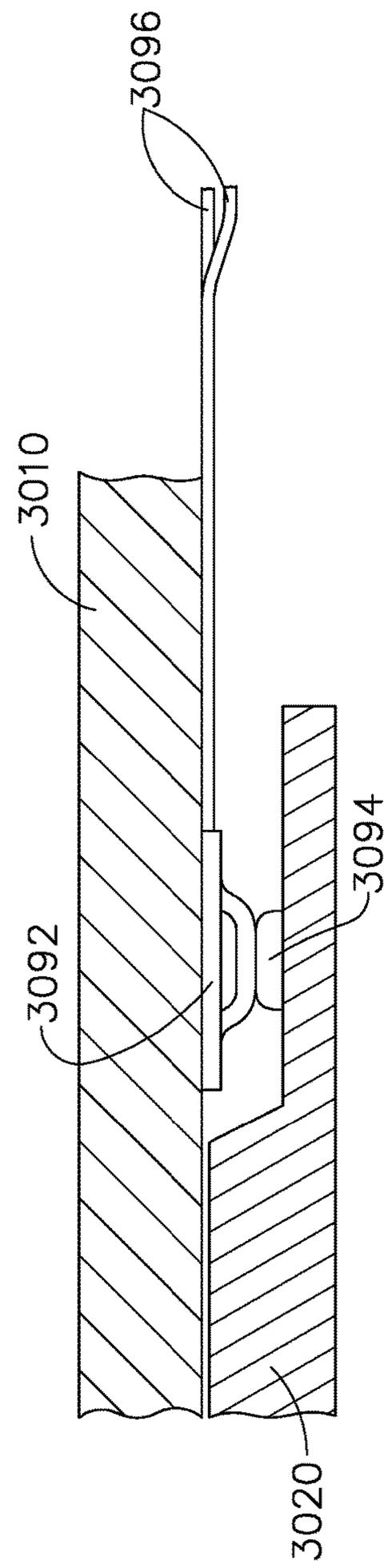
3096
3010
3092
3094
3020

FIG. 40

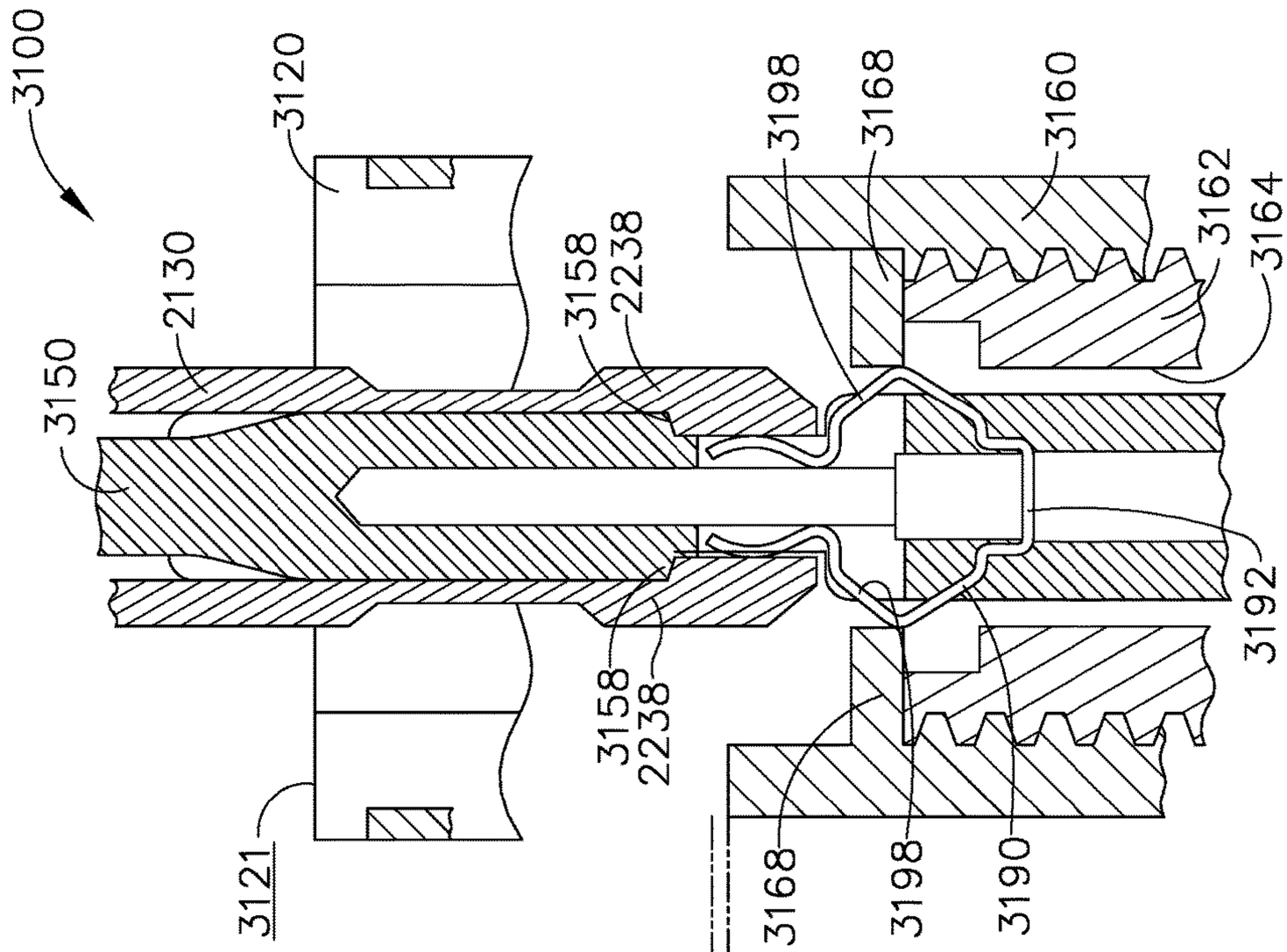
3100
3120
3150
2130
3158
2238
3198
3168
3160
3162
3164
3192
3121
3190

FIG. 42

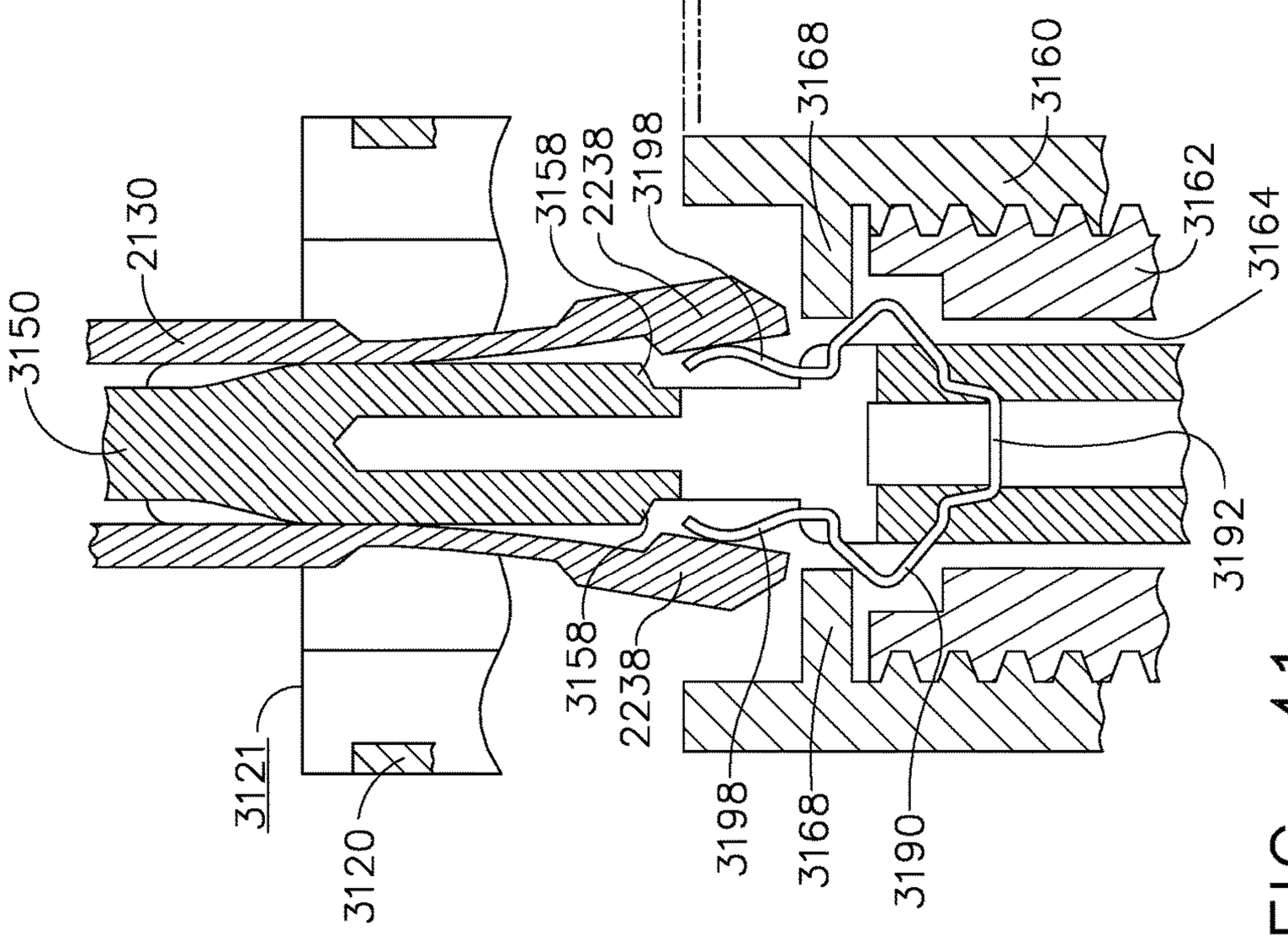
3150
2130
3158
2238
3198
3168
3160
3162
3164
3192
3121
3120
3190

FIG. 41

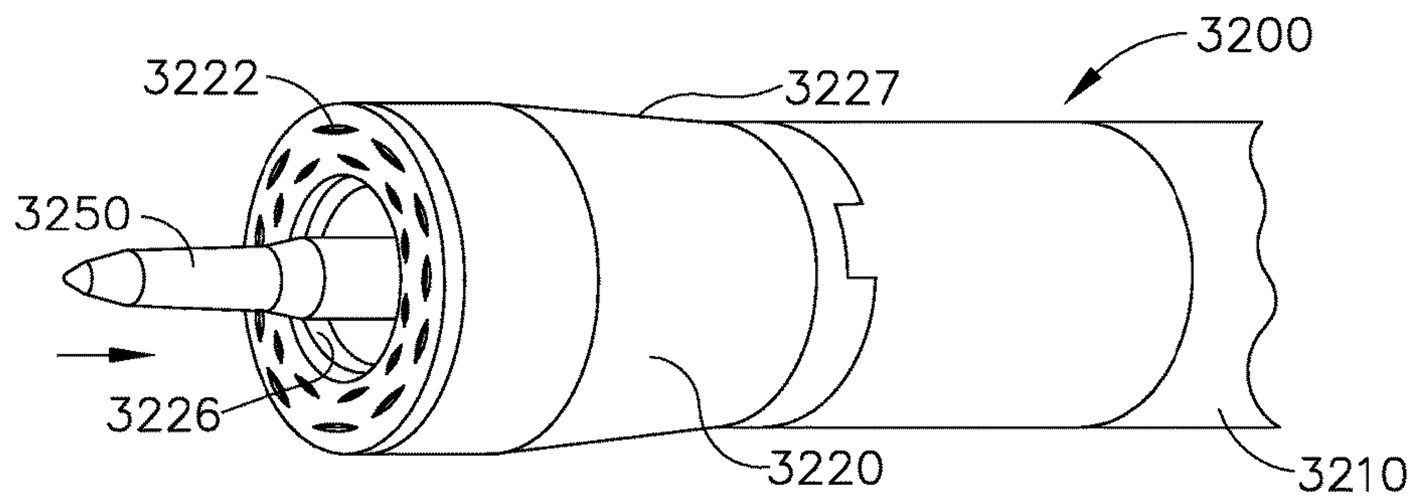

FIG. 43

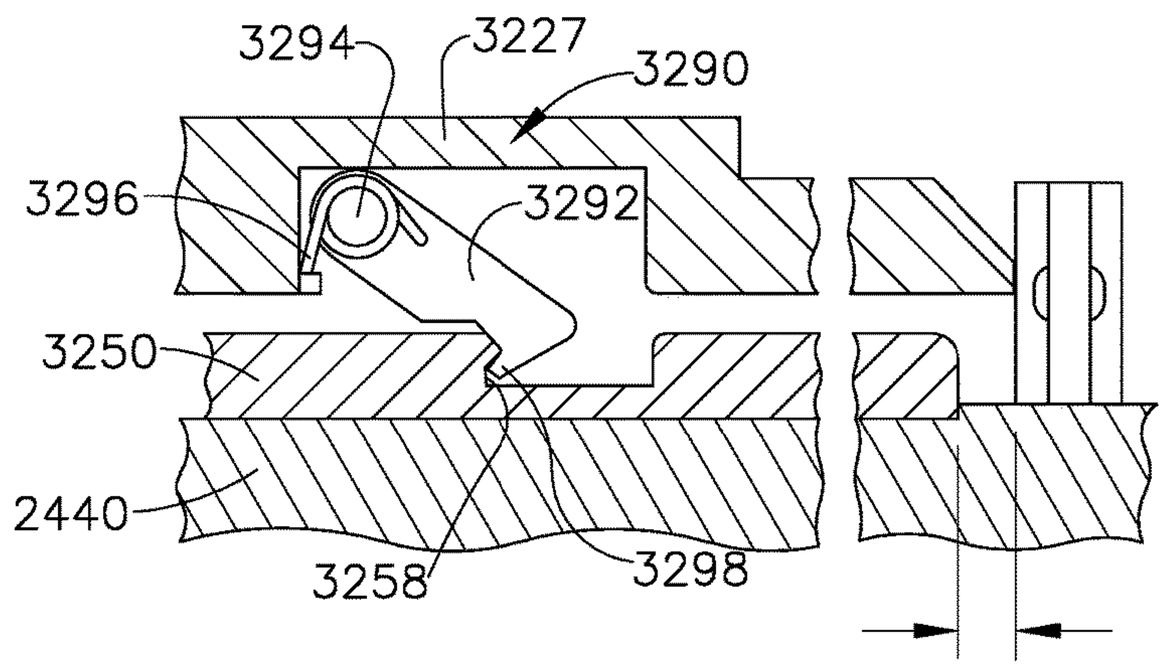

FIG. 44

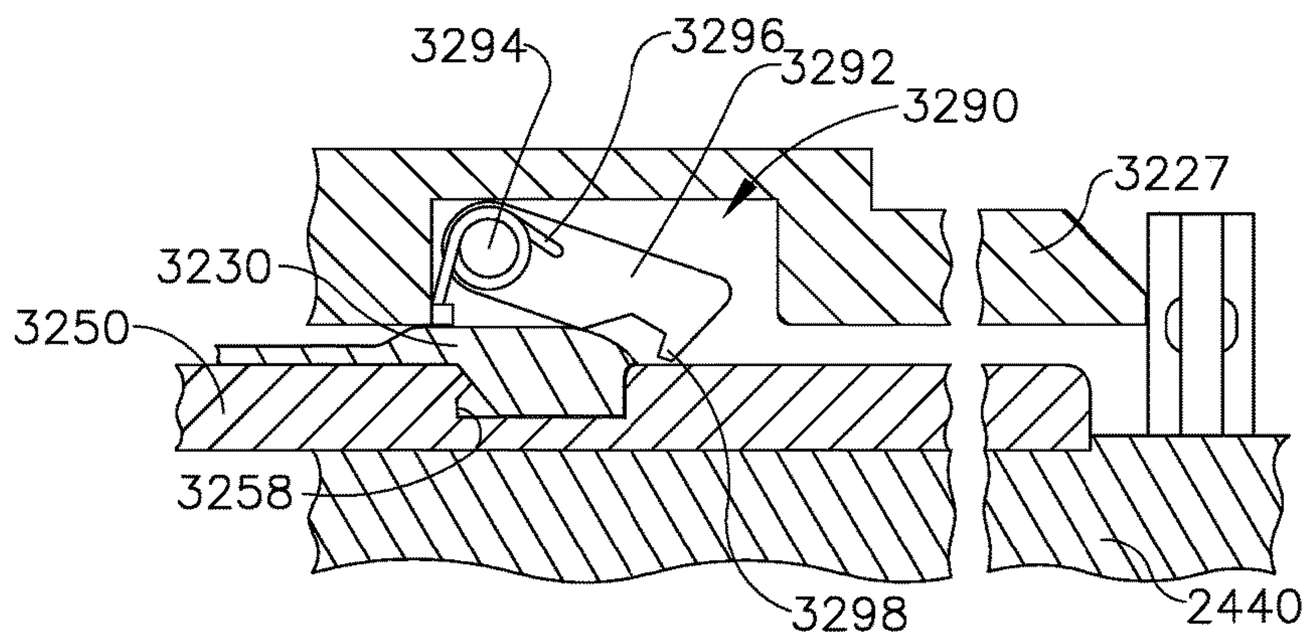

FIG. 45

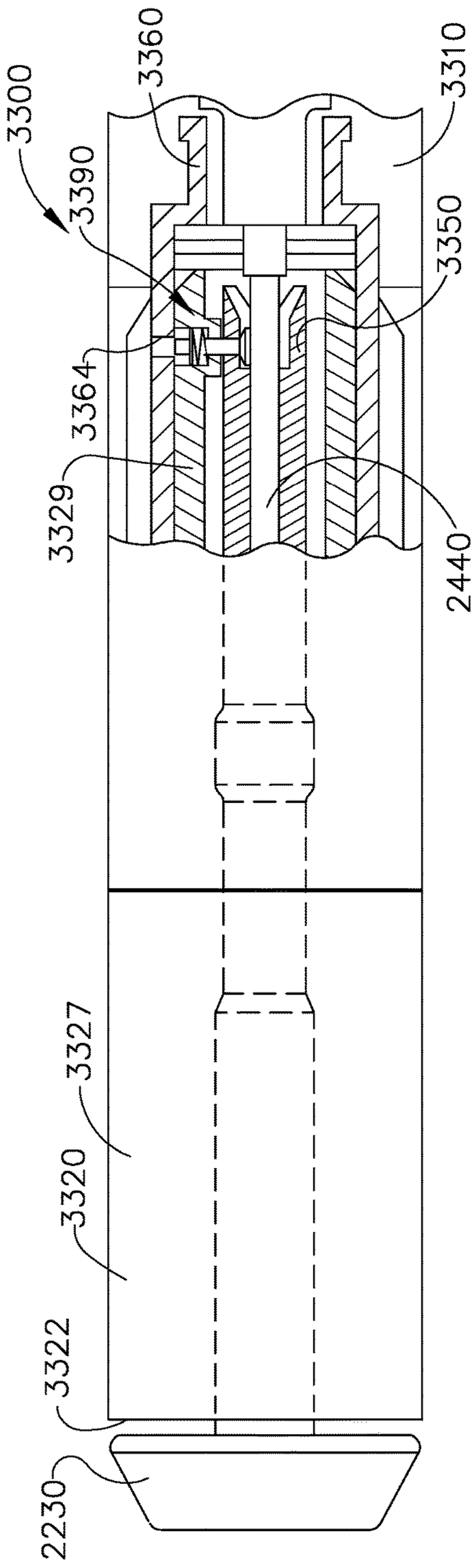

FIG. 46

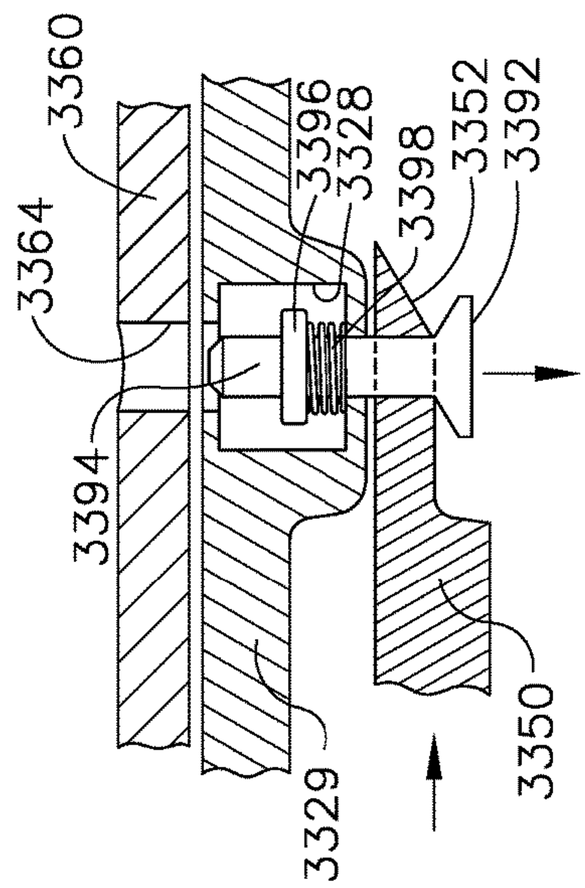

FIG. 48

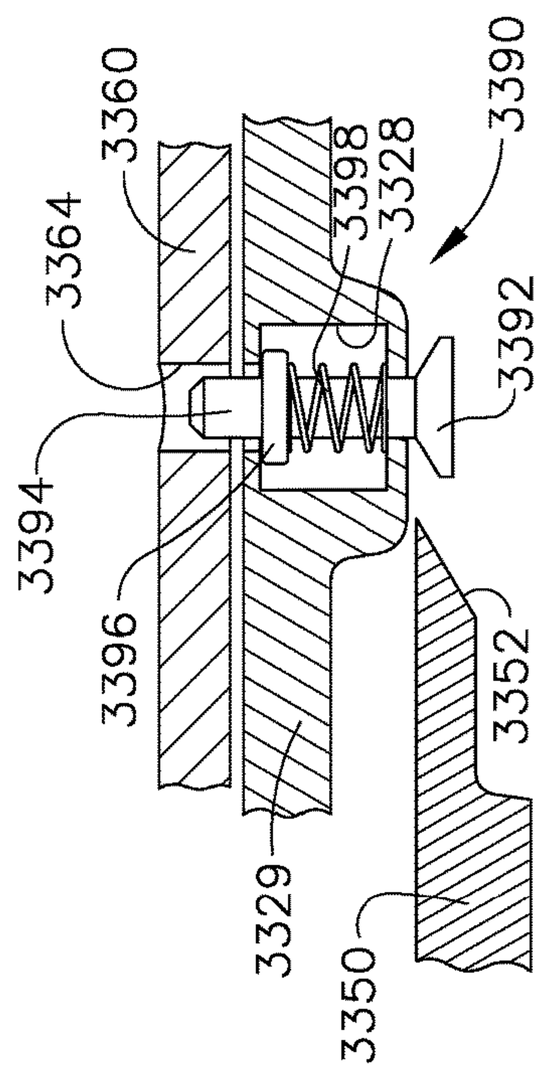

FIG. 47

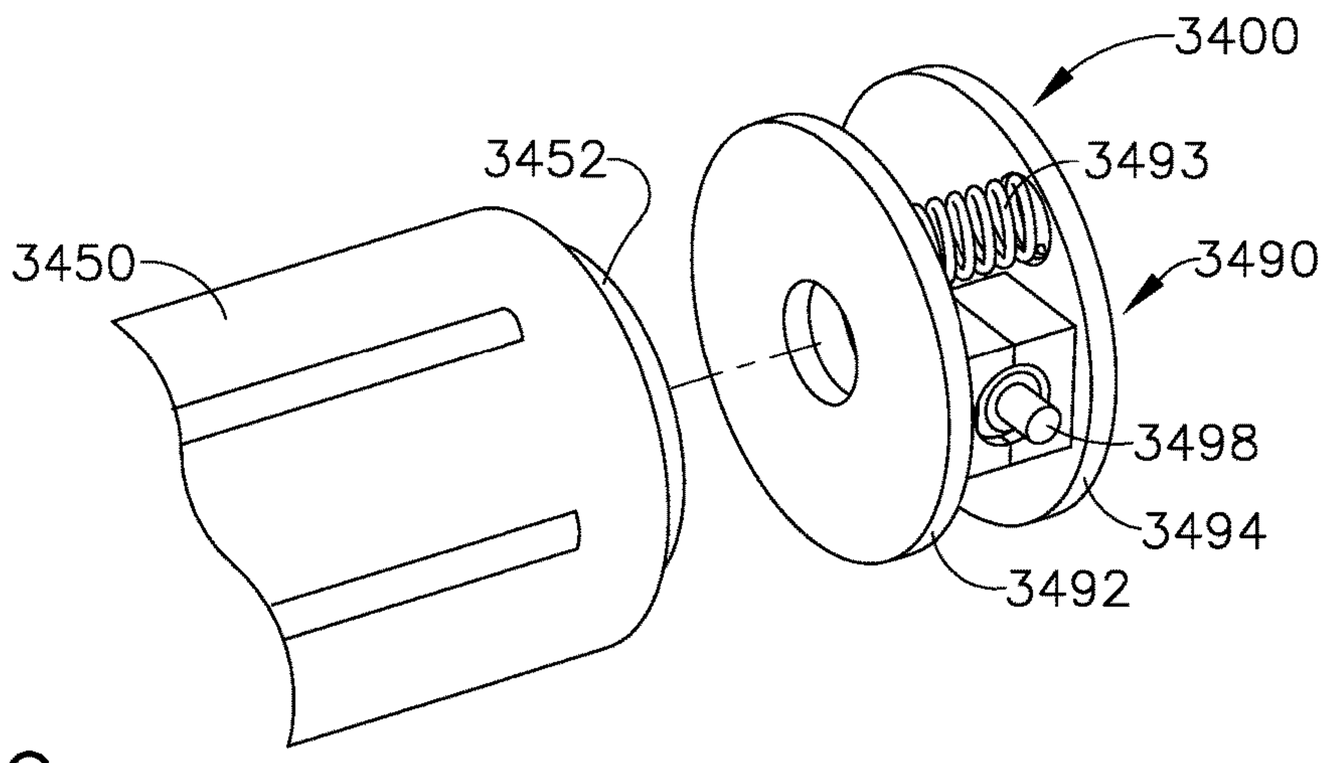

FIG. 49

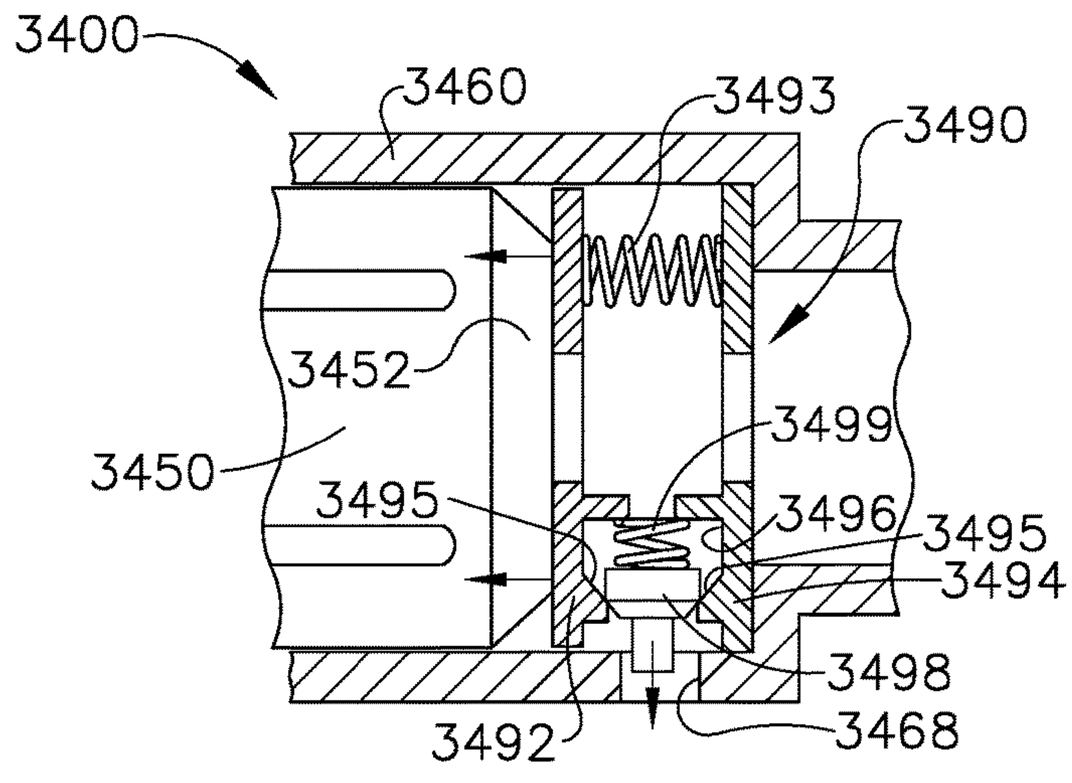

FIG. 50

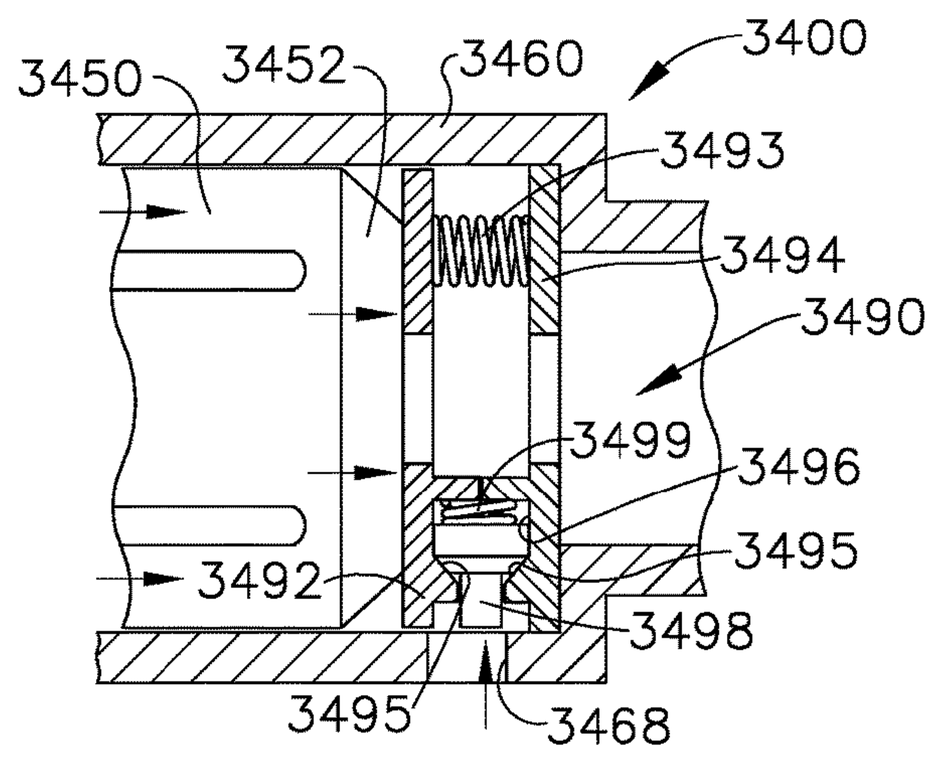

FIG. 51

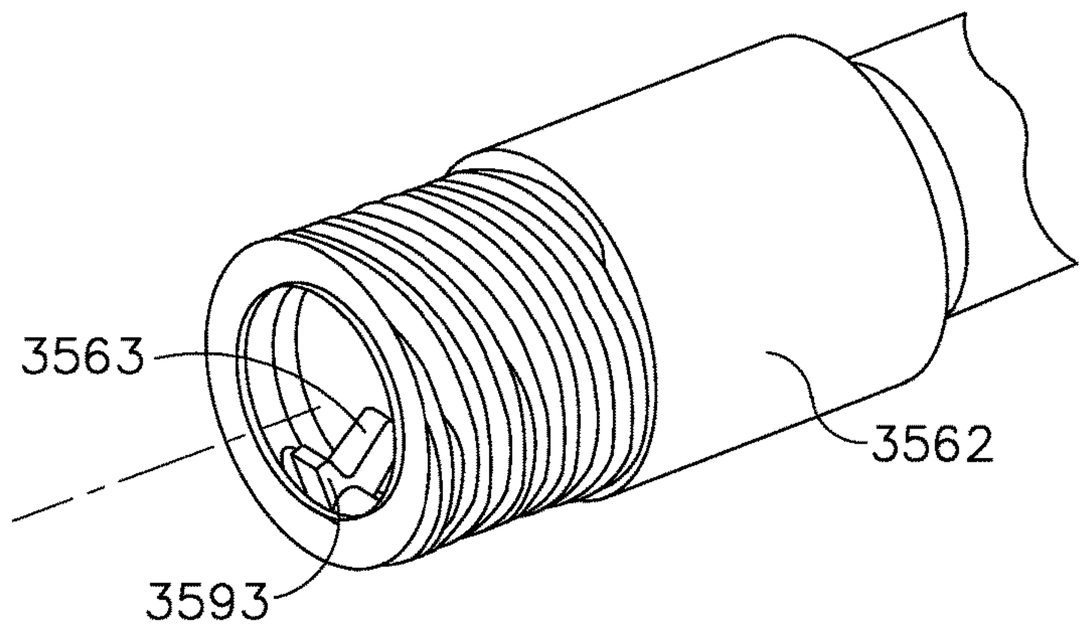

FIG. 52

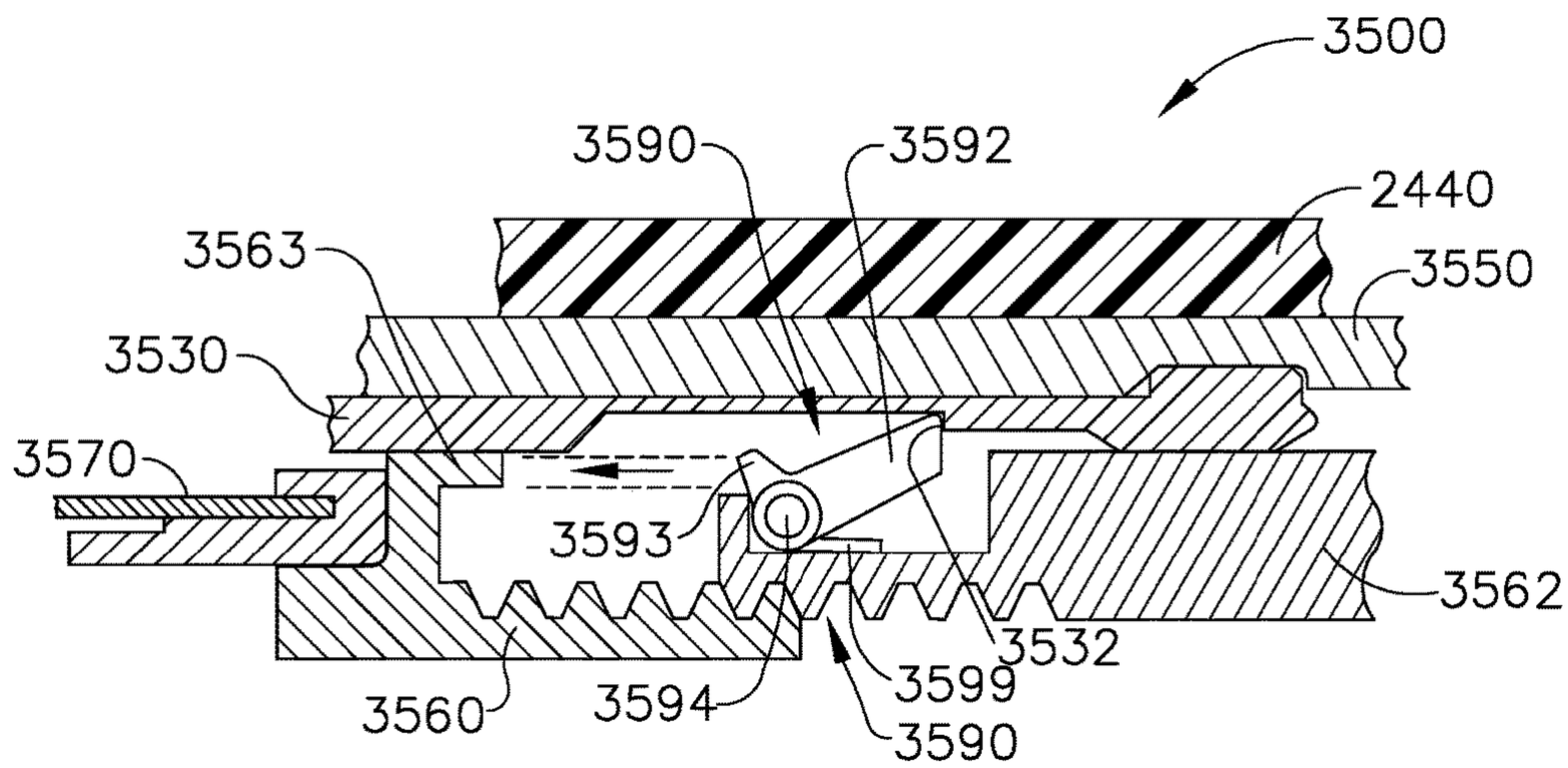

FIG. 53

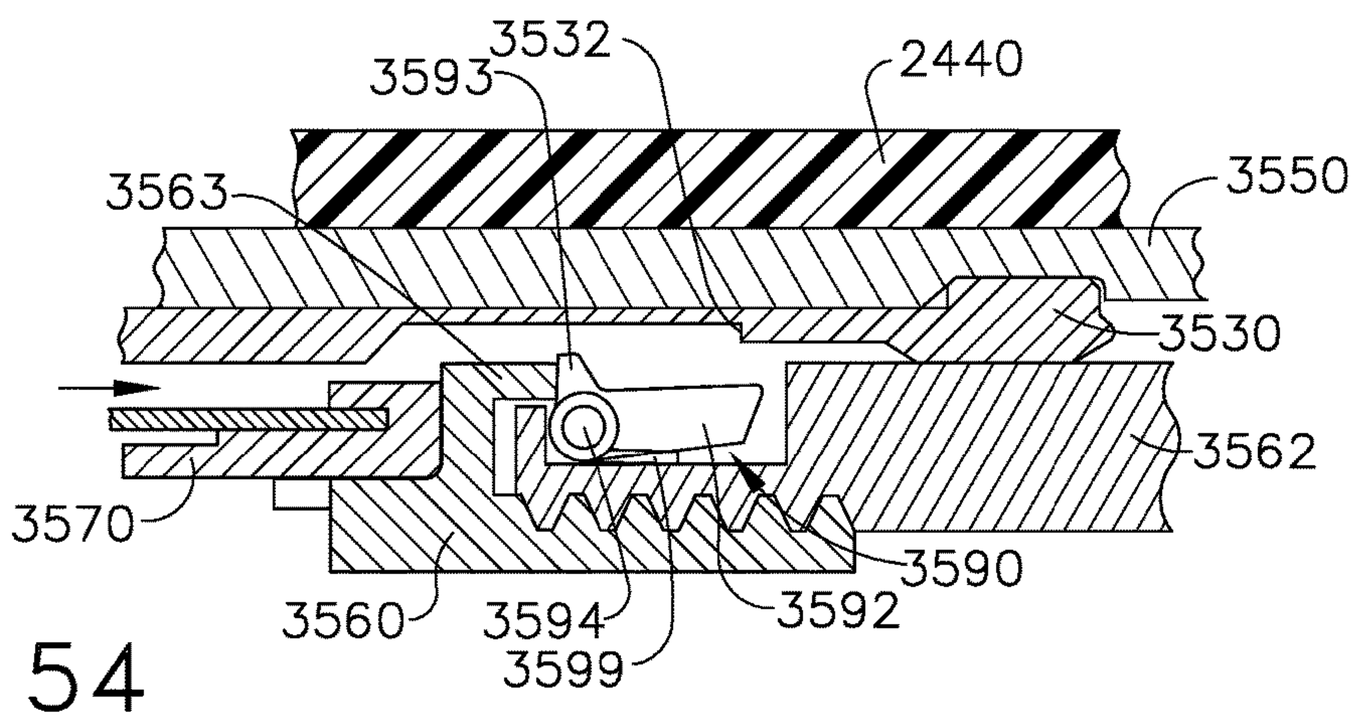

FIG. 54

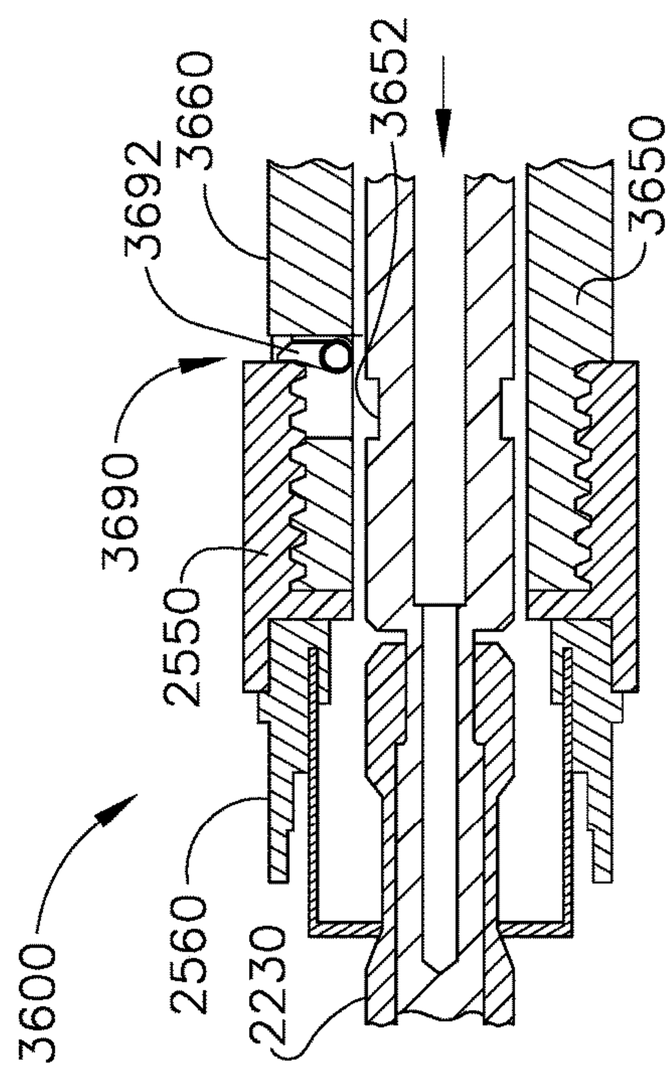

FIG. 55

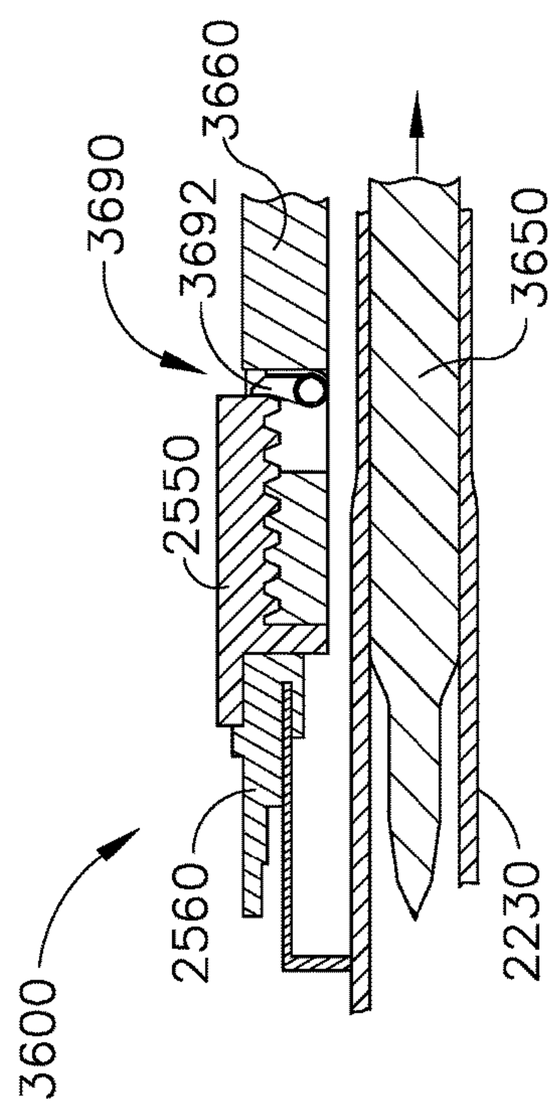

FIG. 56

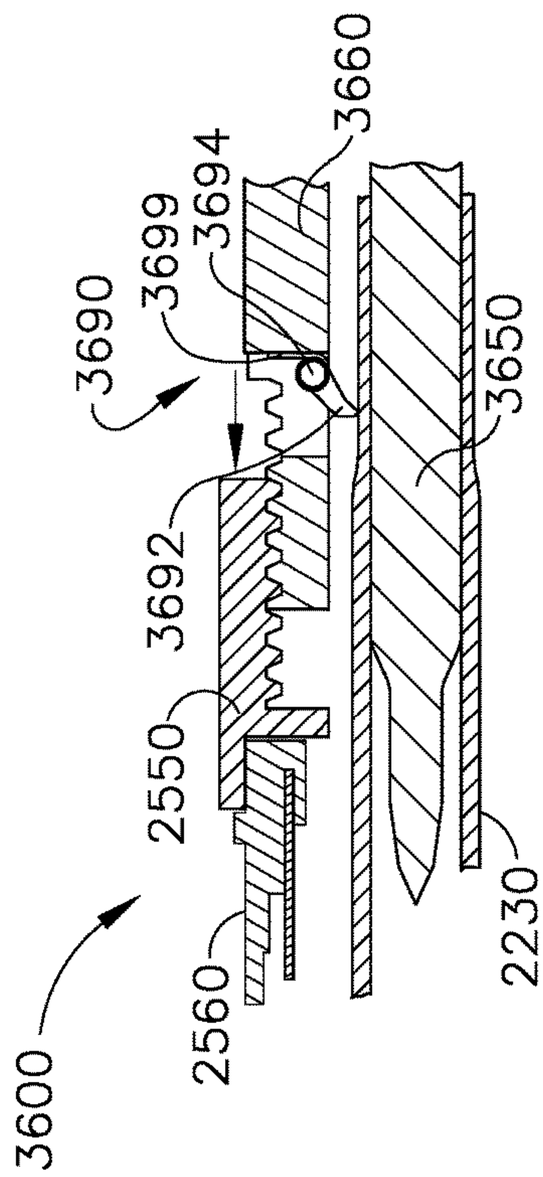

FIG. 57

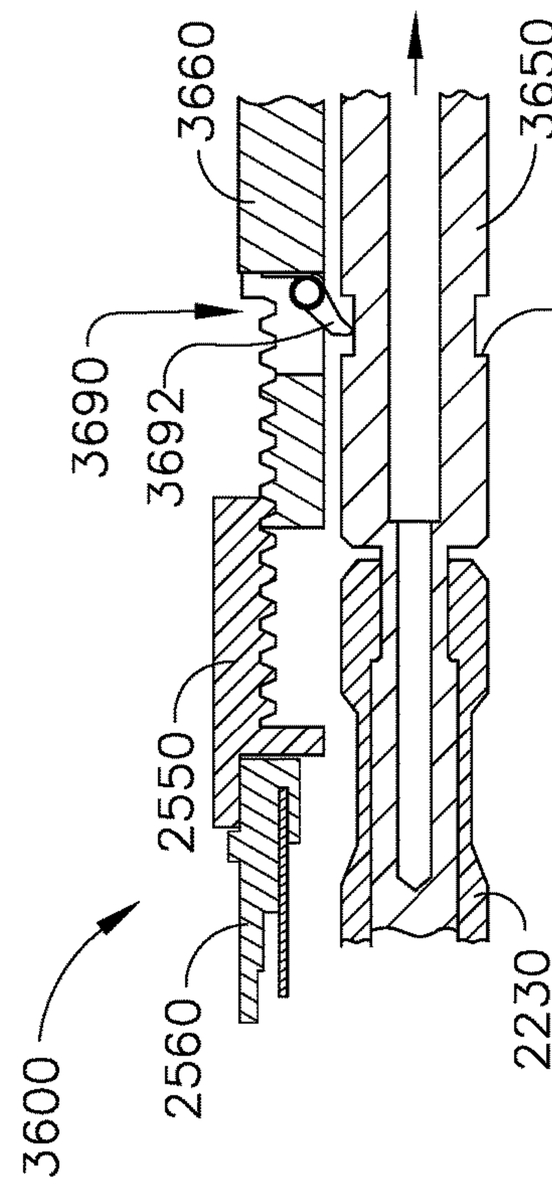

FIG. 58

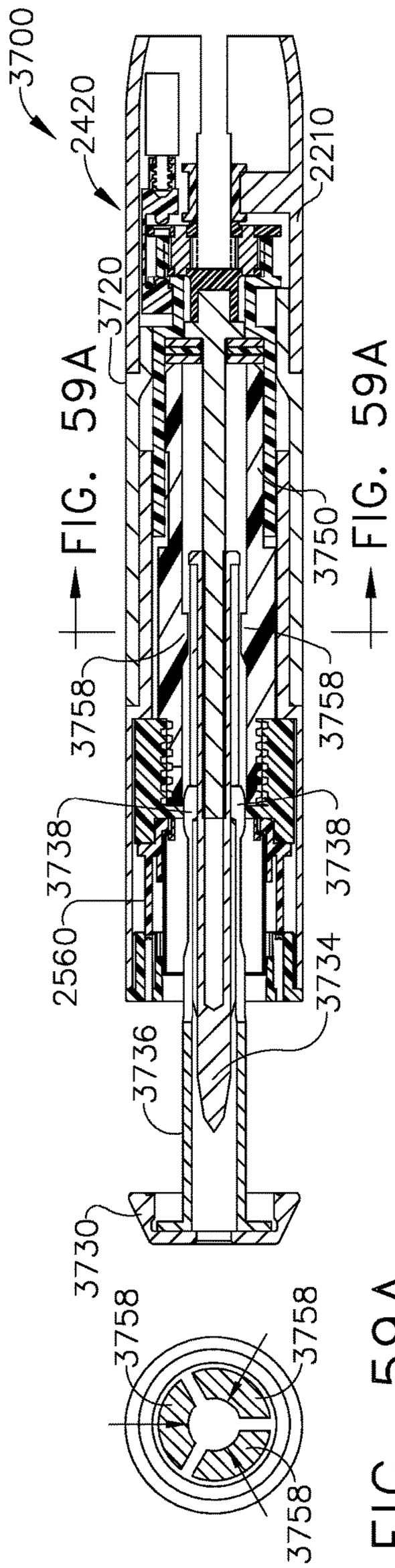

FIG. 59

FIG. 59A

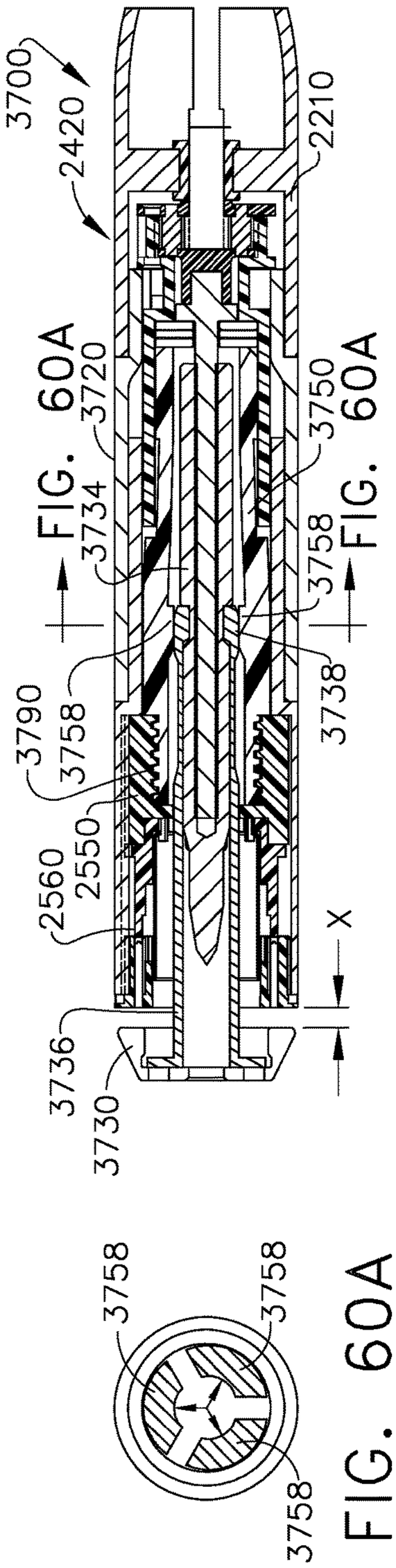

FIG. 60

FIG. 60A

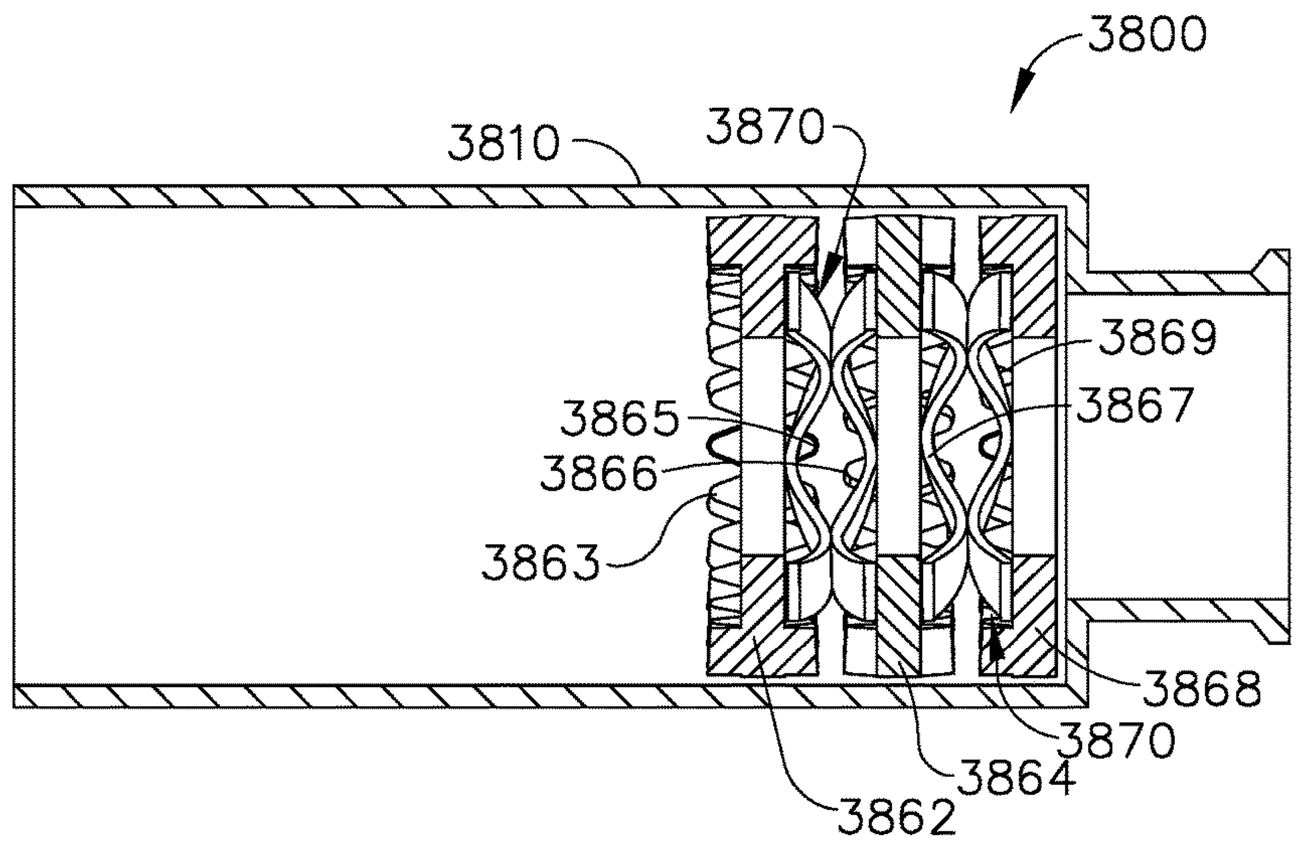
3800
3810
3870
3869
3867
3865
3866
3863
3868
3870
3864
3862

FIG. 61

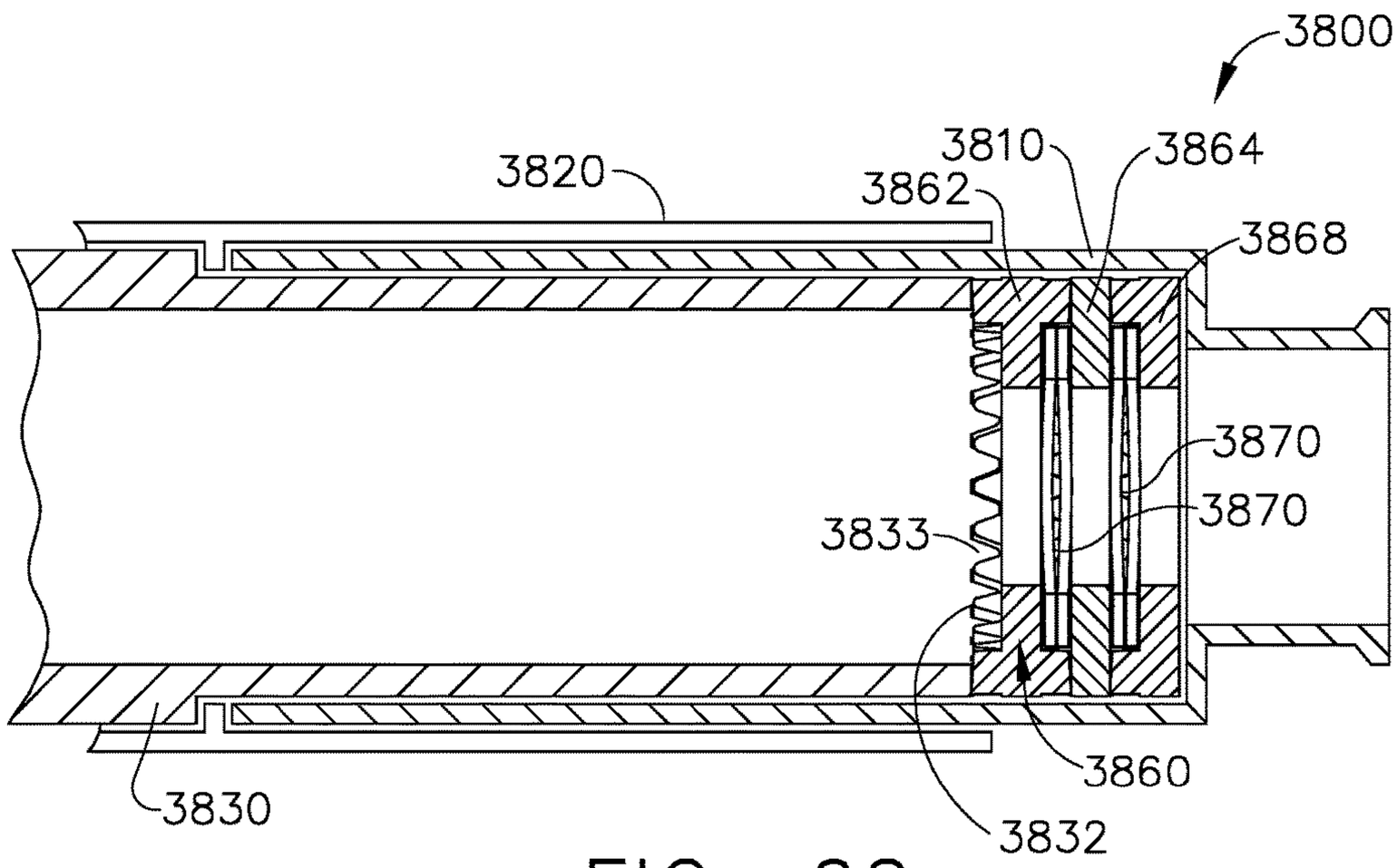
3800
3810
3864
3820
3862
3868
3870
3870
3833
3860
3830
3832

FIG. 62

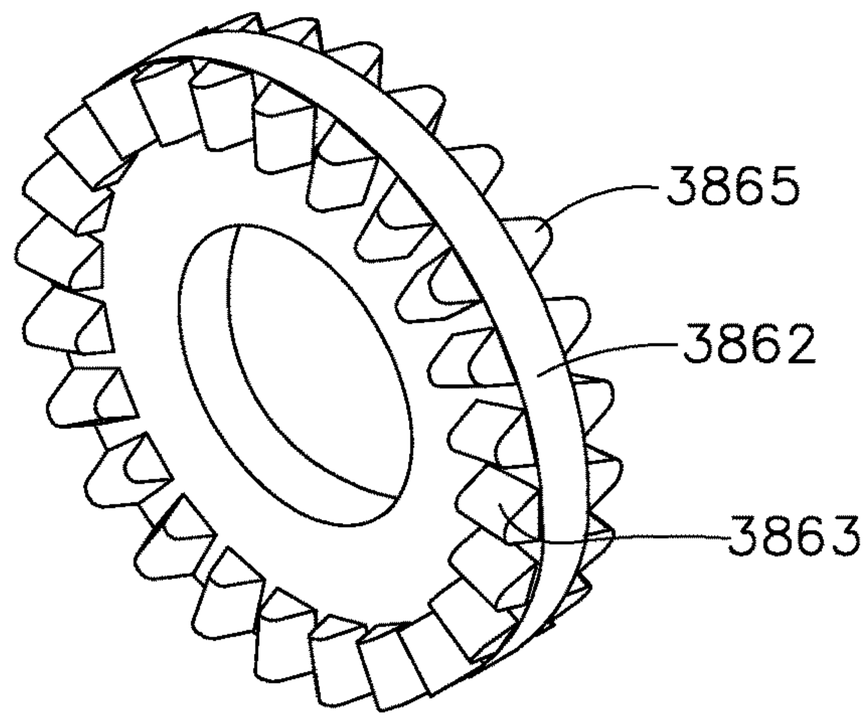

FIG. 63

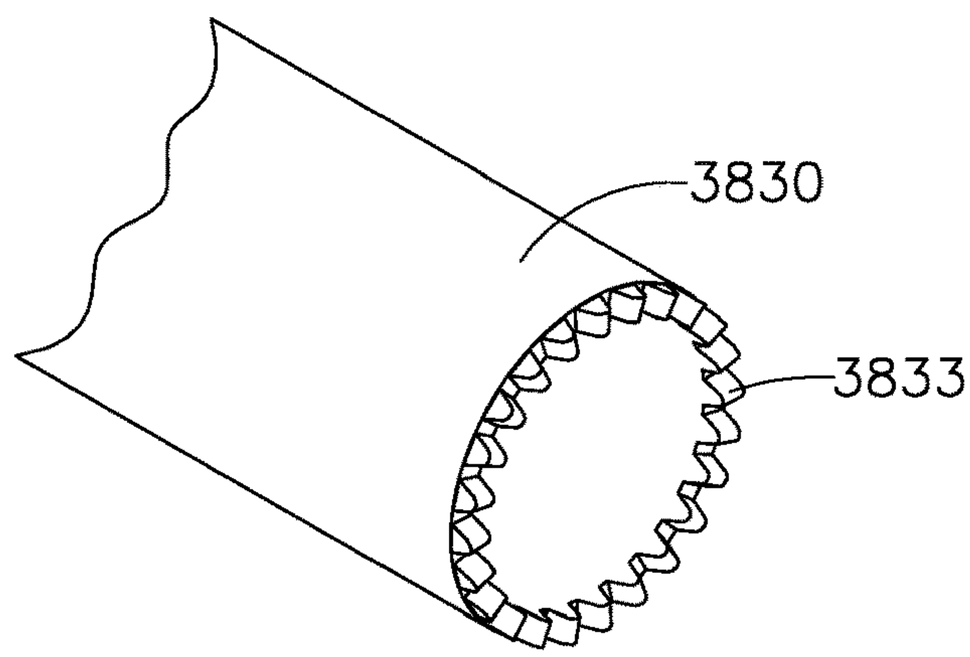

FIG. 64

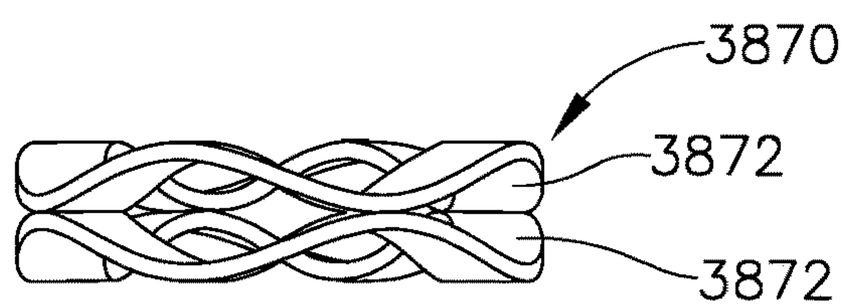

FIG. 65

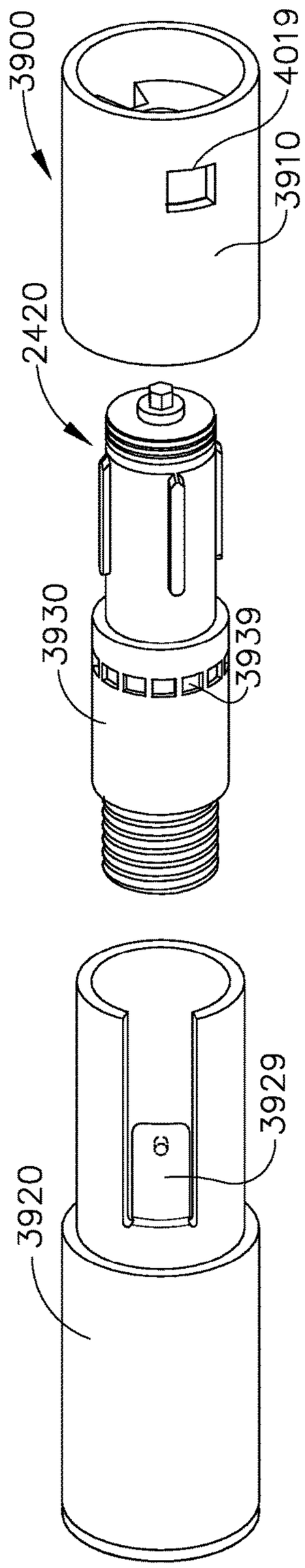

FIG. 66

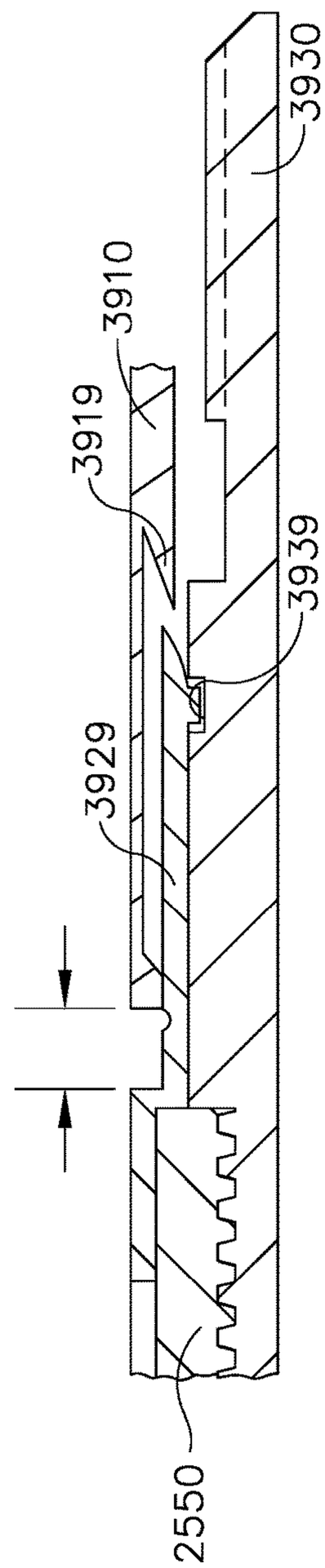

FIG. 67

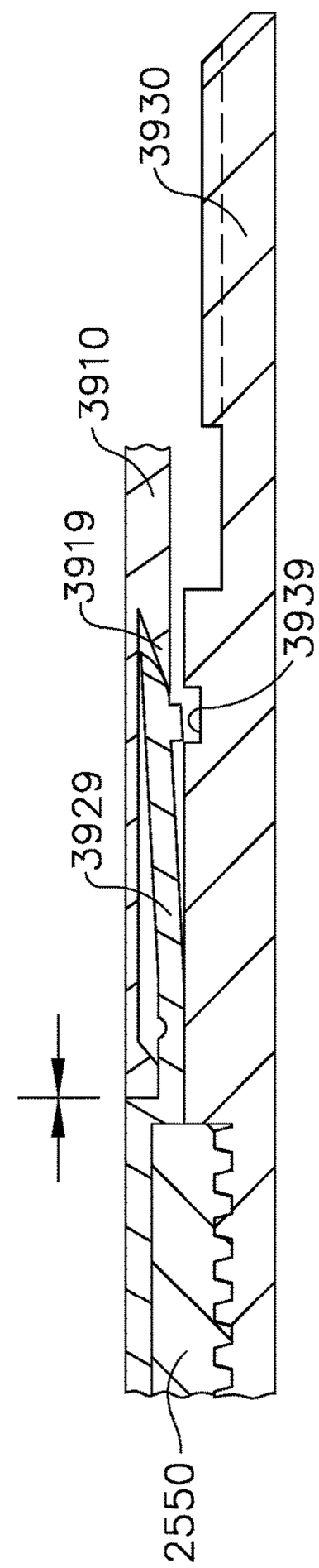

FIG. 68

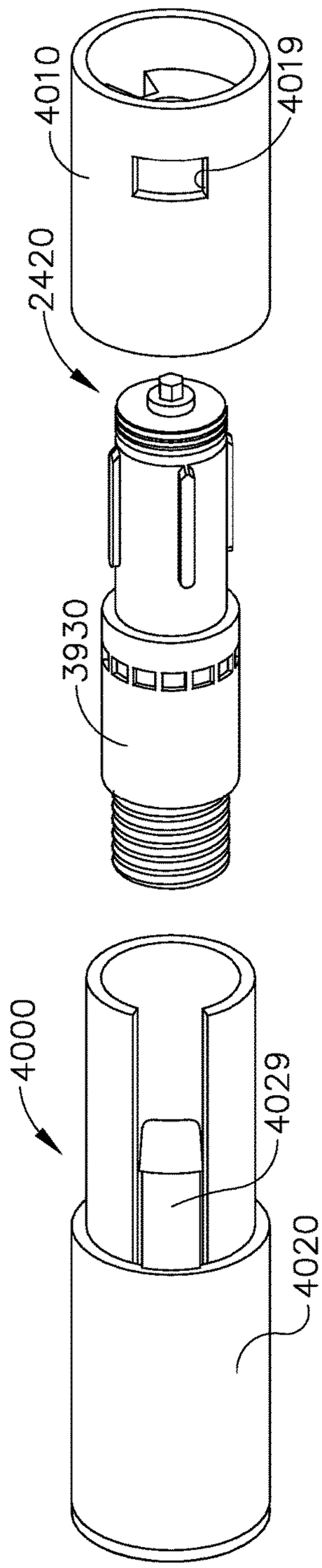

FIG. 69

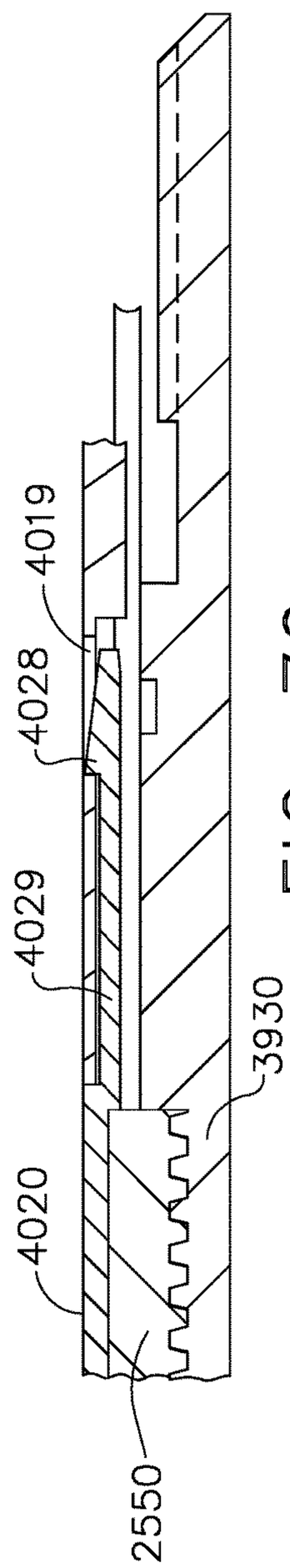

FIG. 70

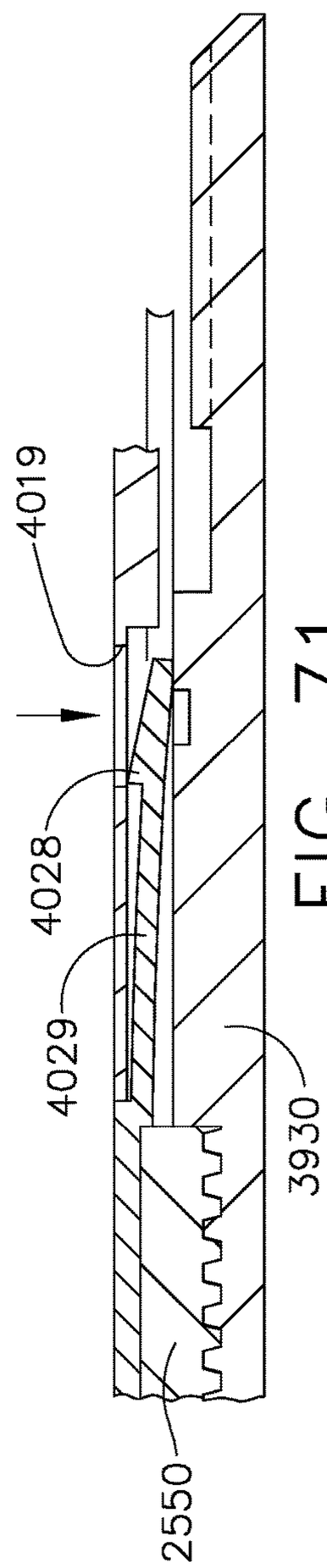

FIG. 71

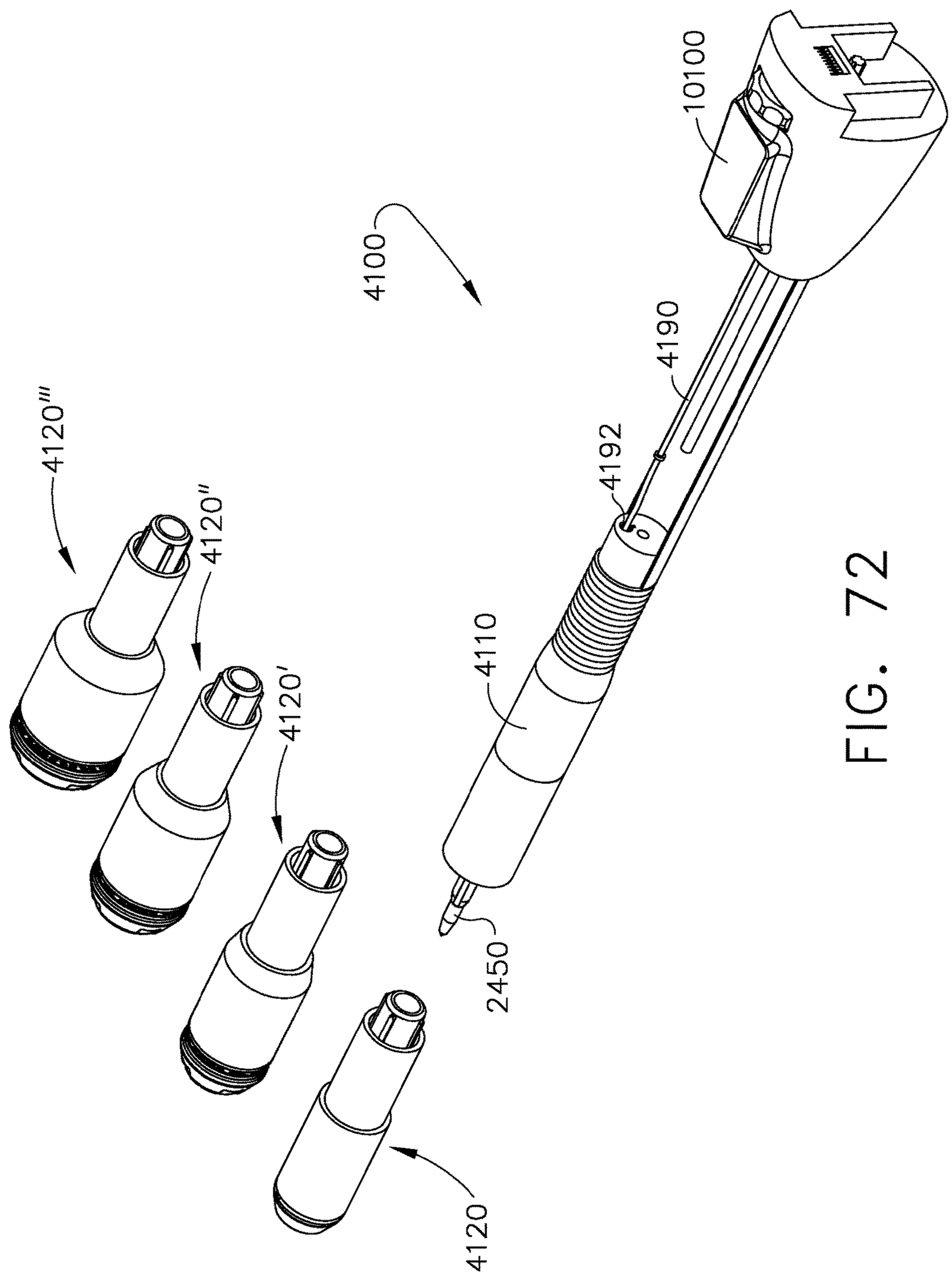

FIG. 72

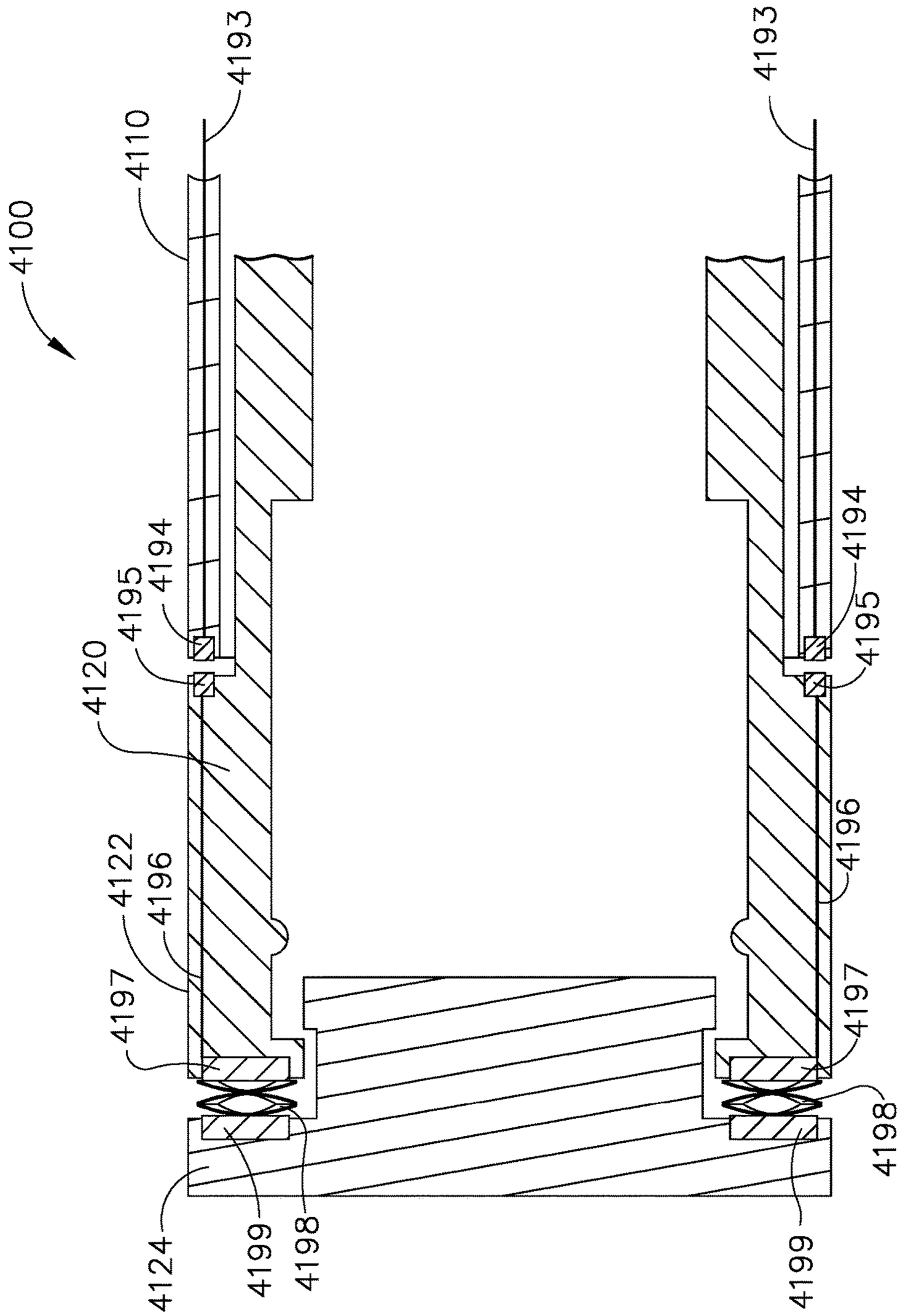
4100
4110
4193
4194
4195
4120
4122
4196
4197
4124
4199
4198
4193
4194
4195
4196
4197
4198
4199

FIG. 73

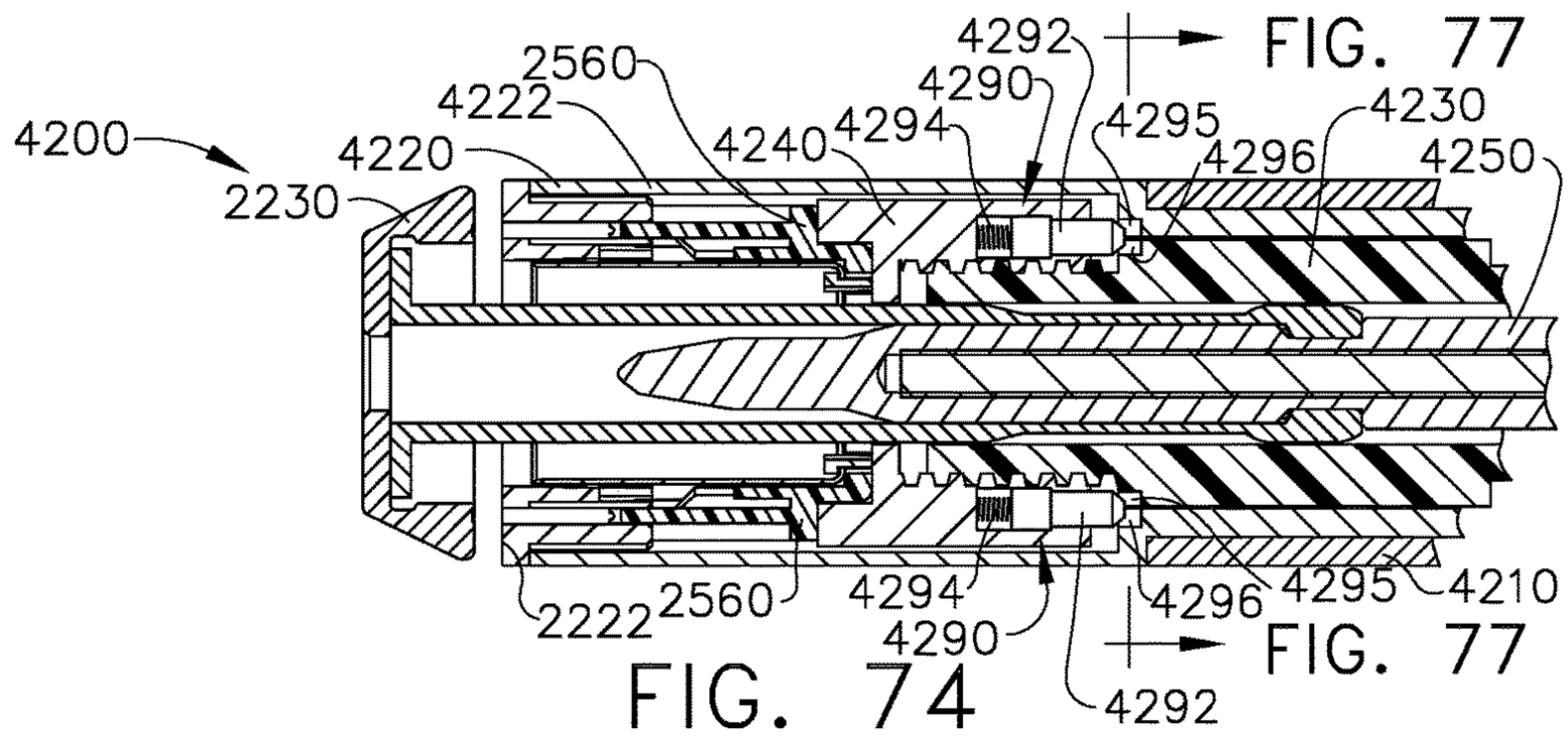

FIG. 74

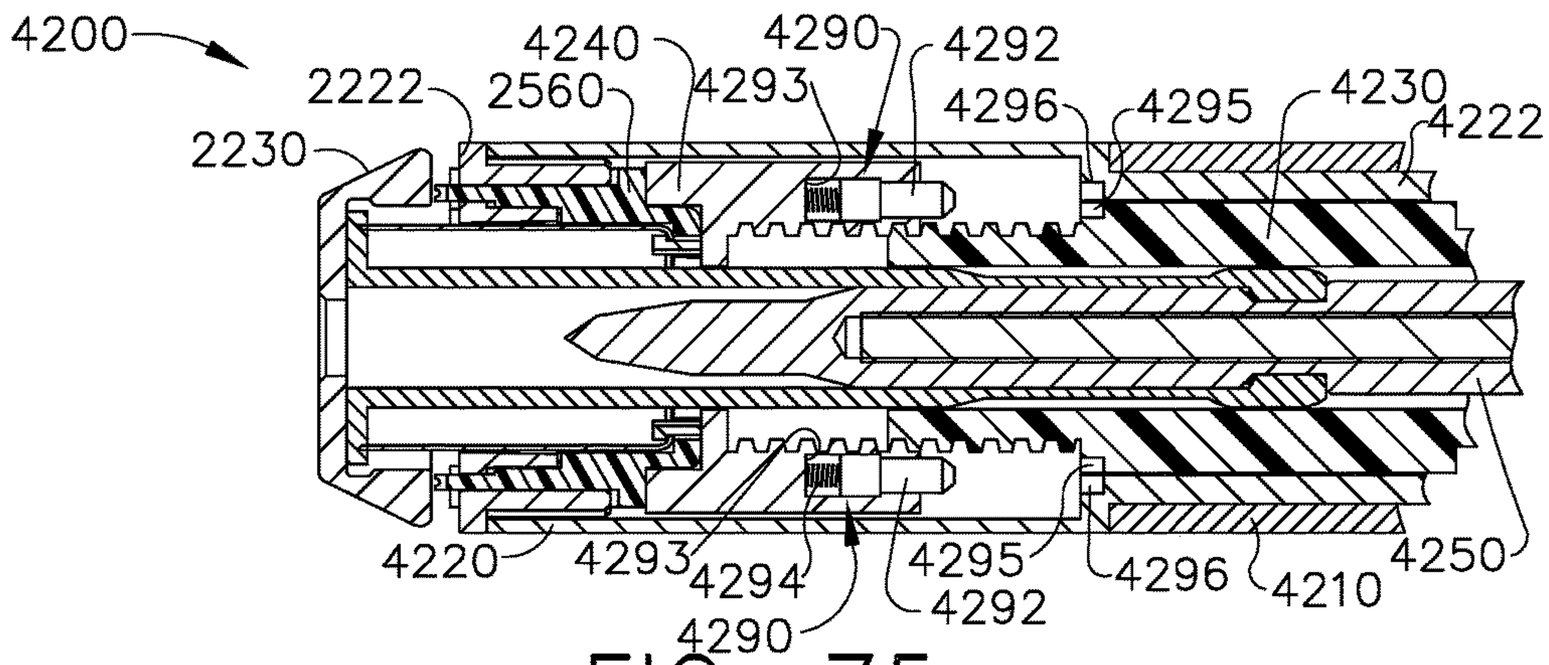

FIG. 75

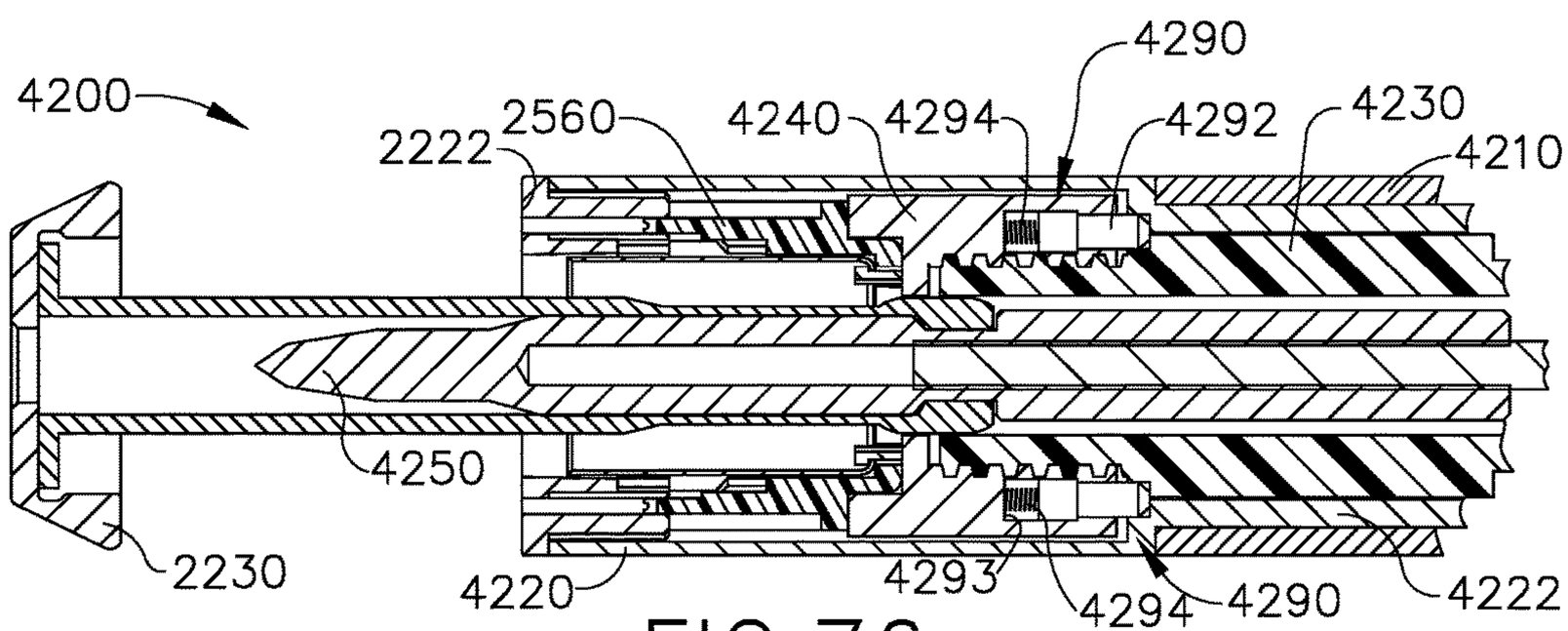

FIG.76

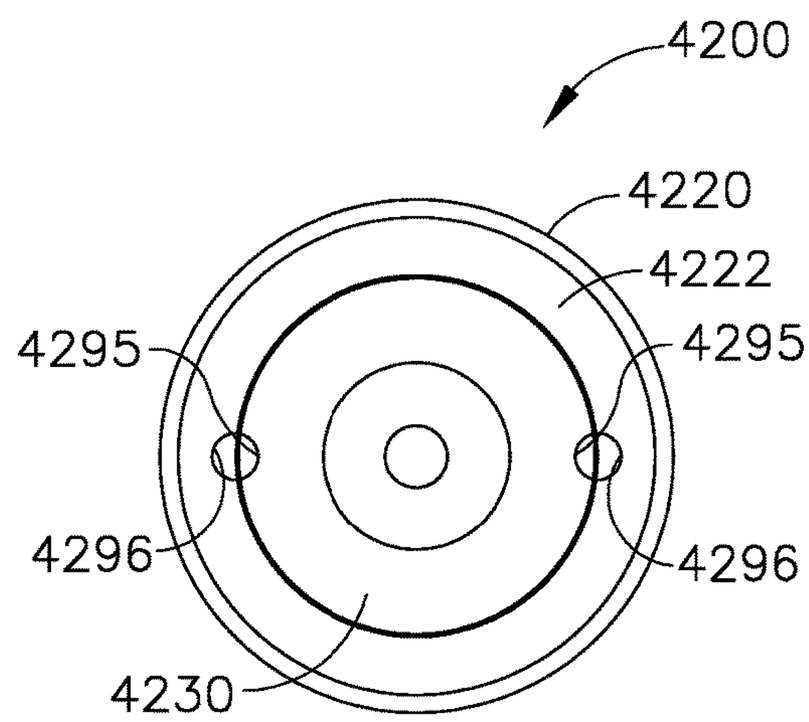

FIG. 77

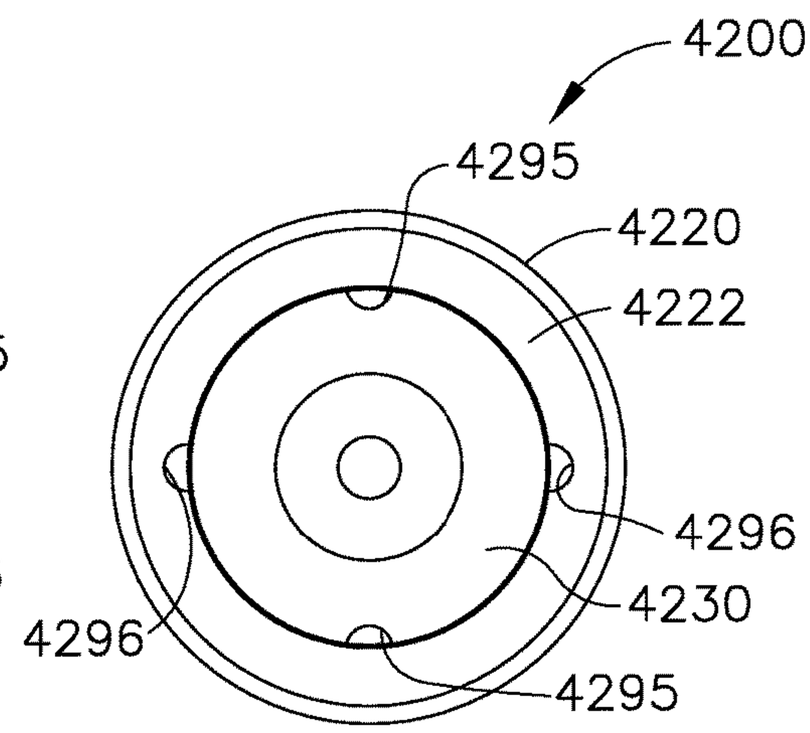

FIG. 78

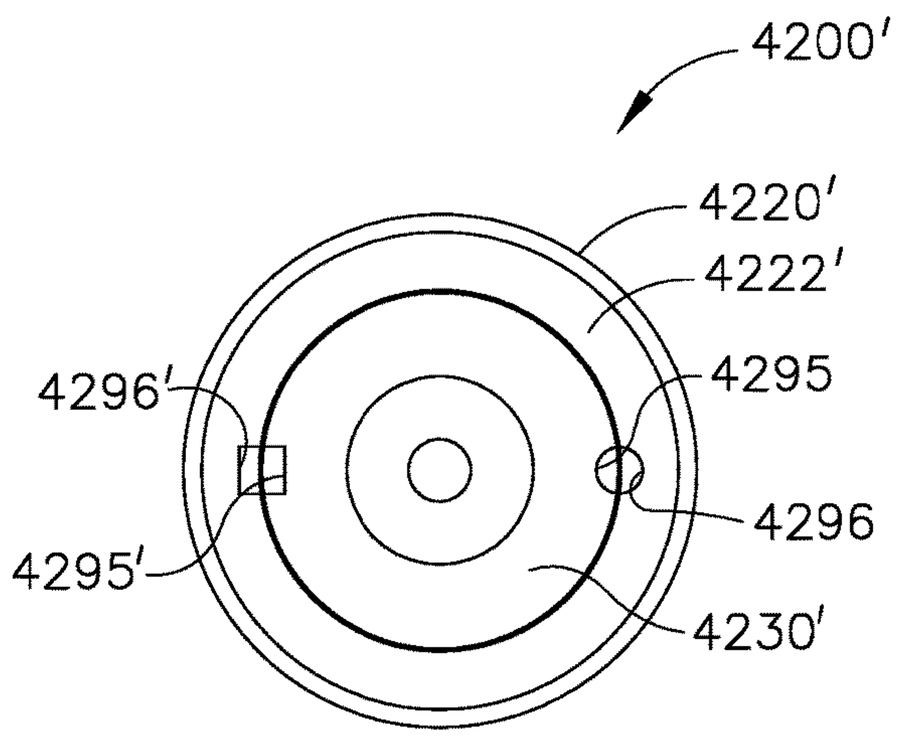

FIG. 79

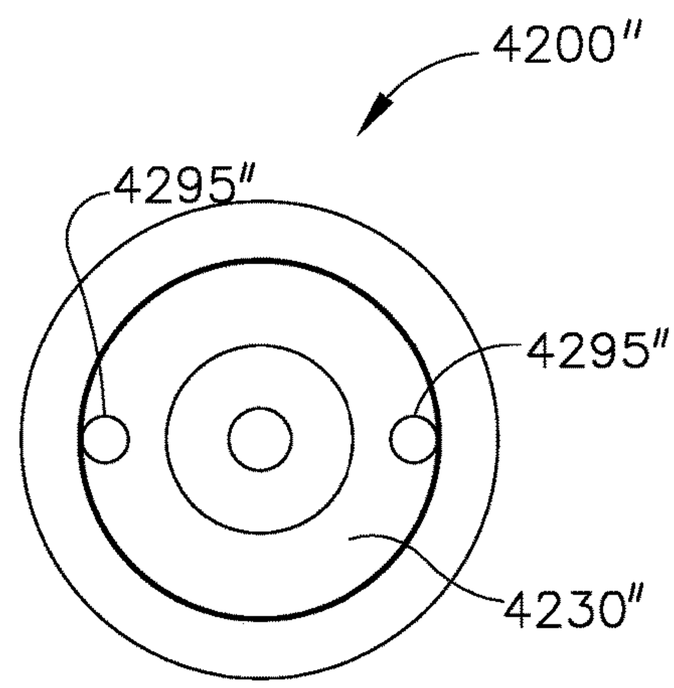

FIG. 80

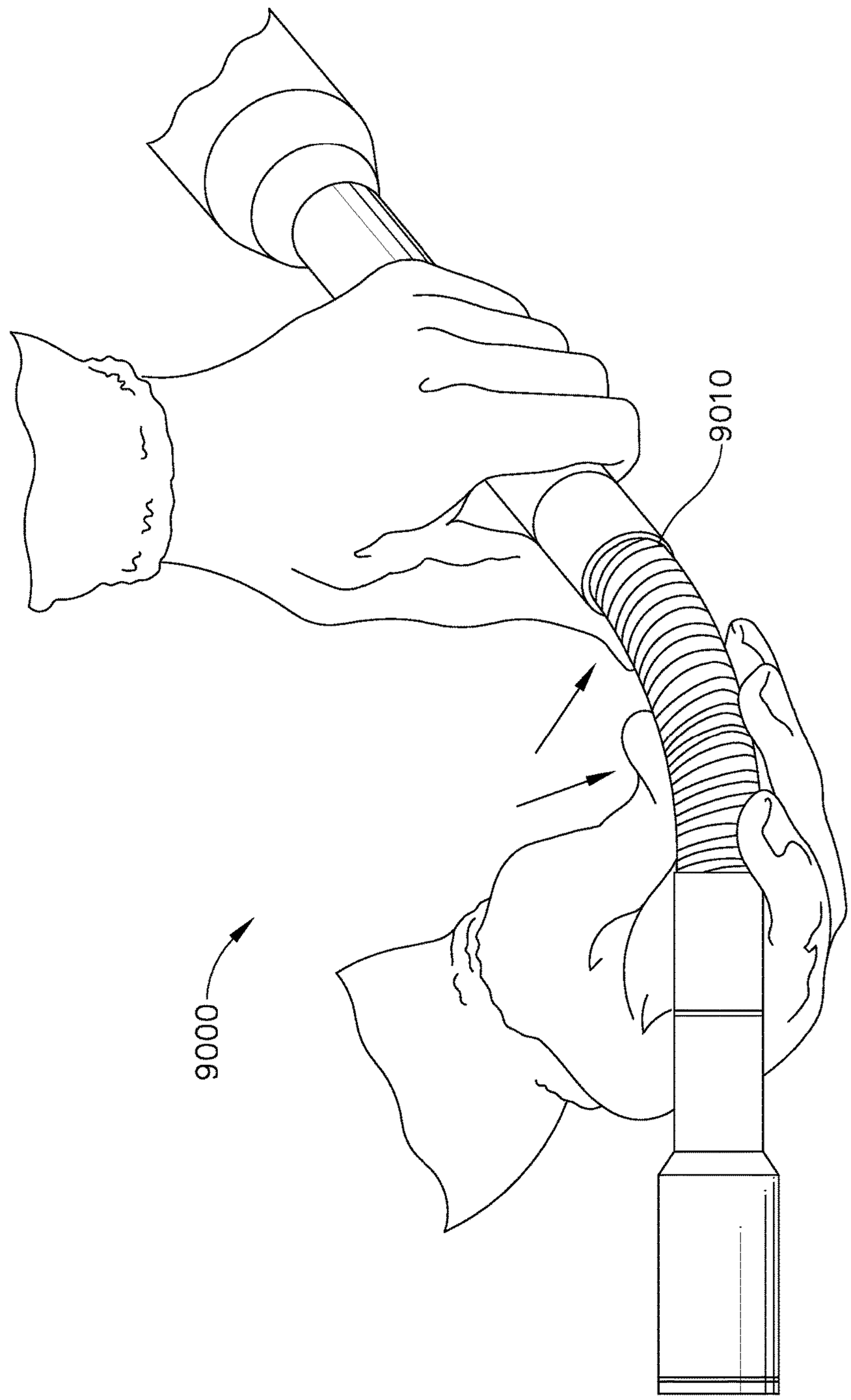

FIG. 81

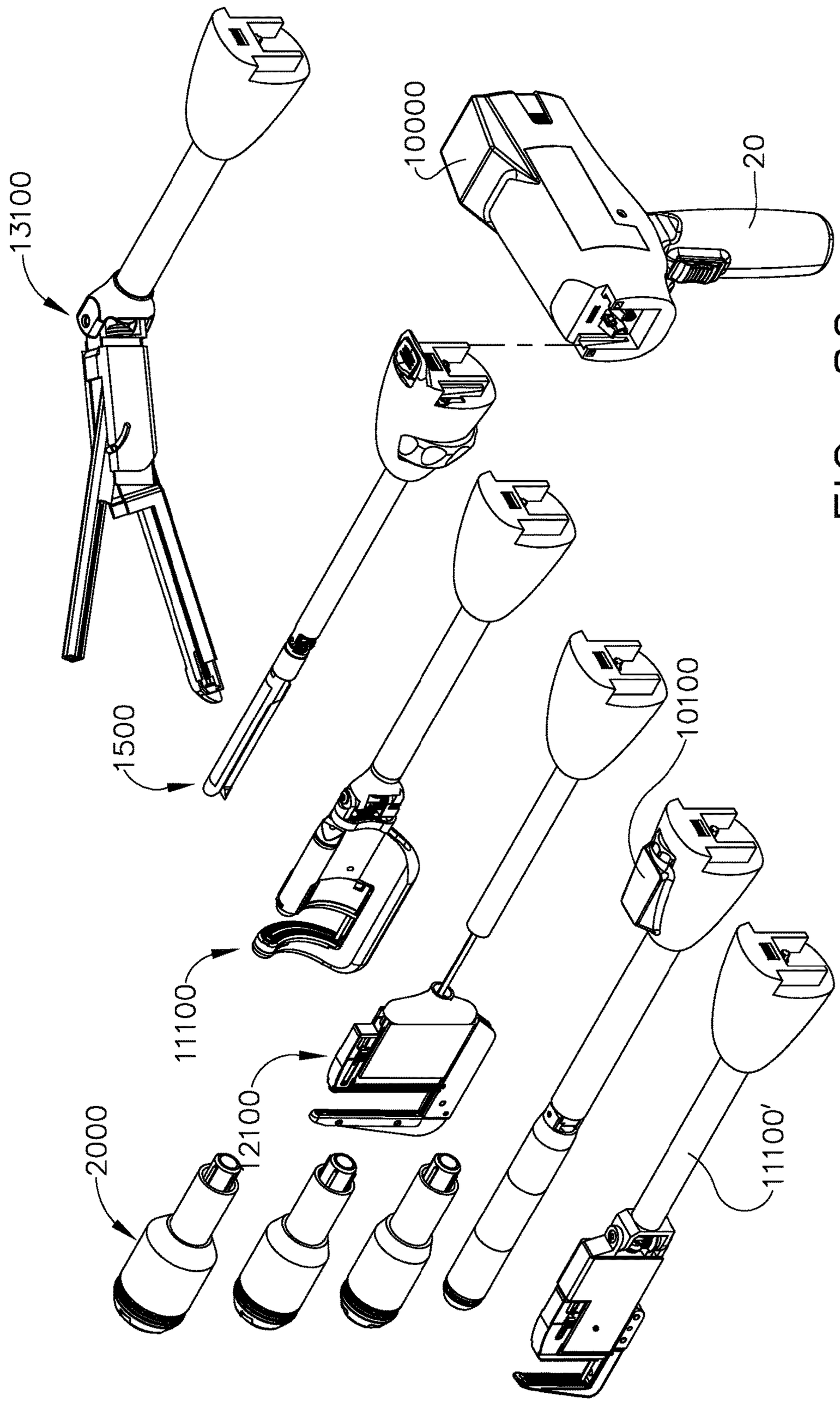

FIG. 82

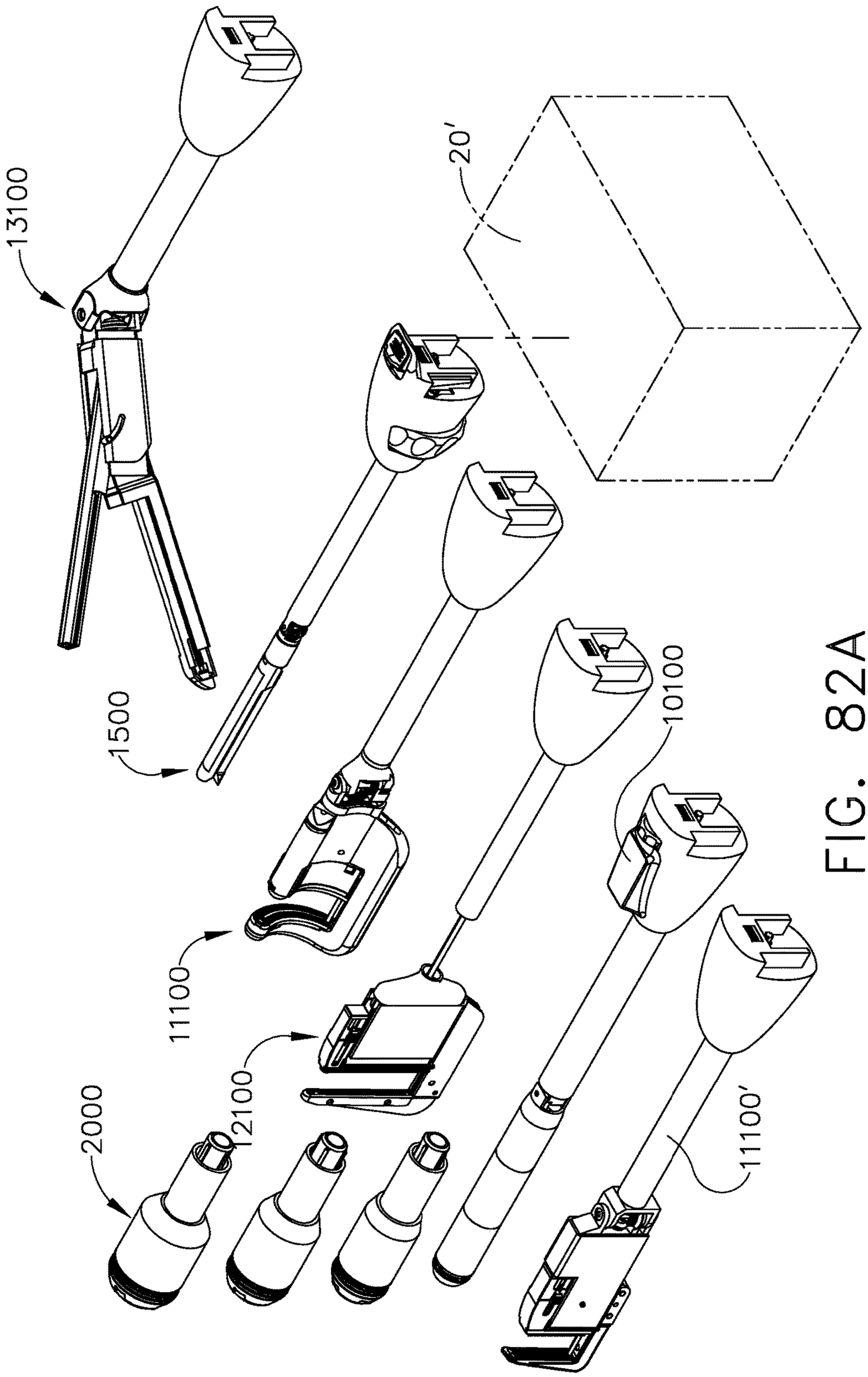

FIG. 82A

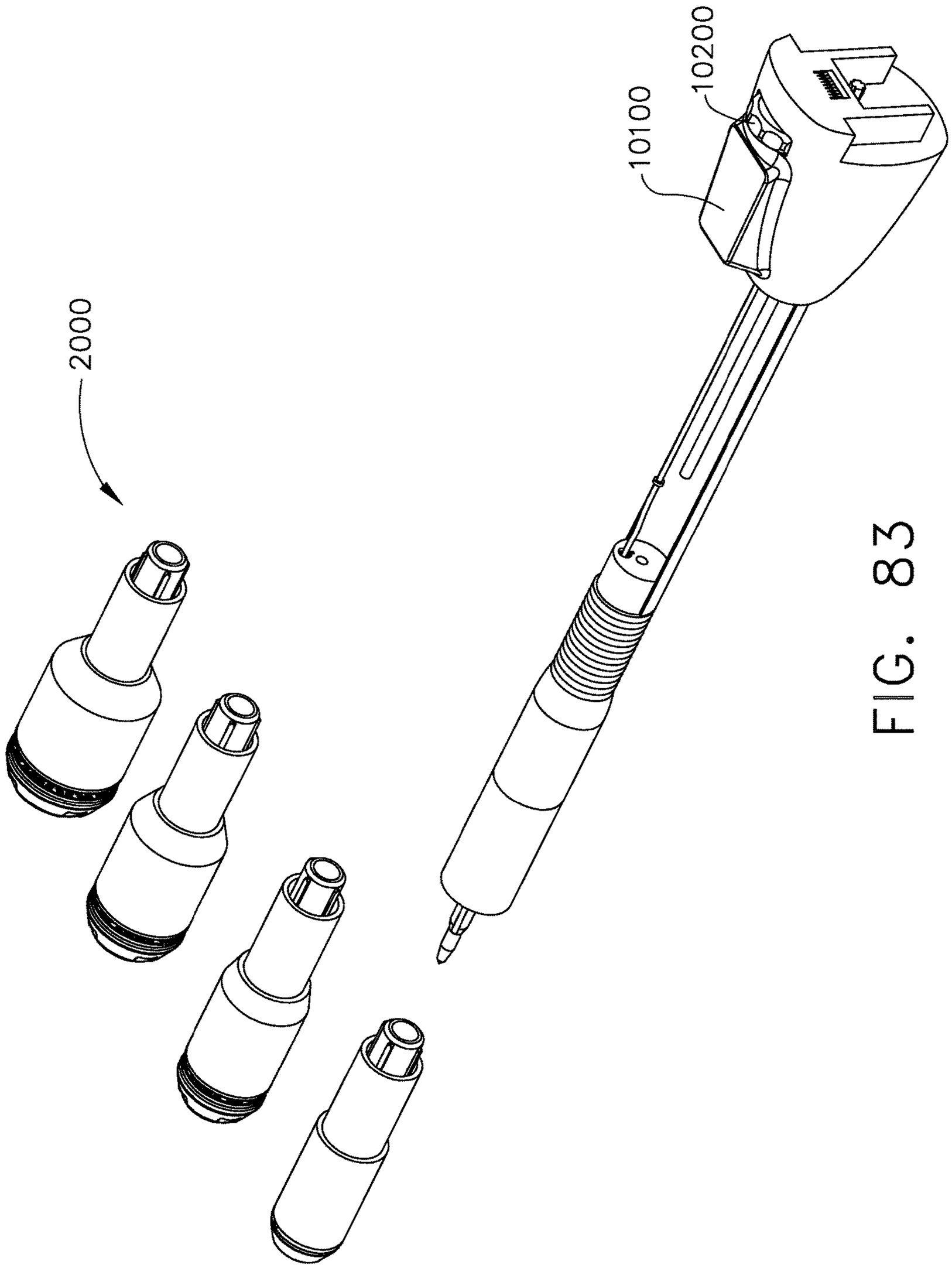

FIG. 83

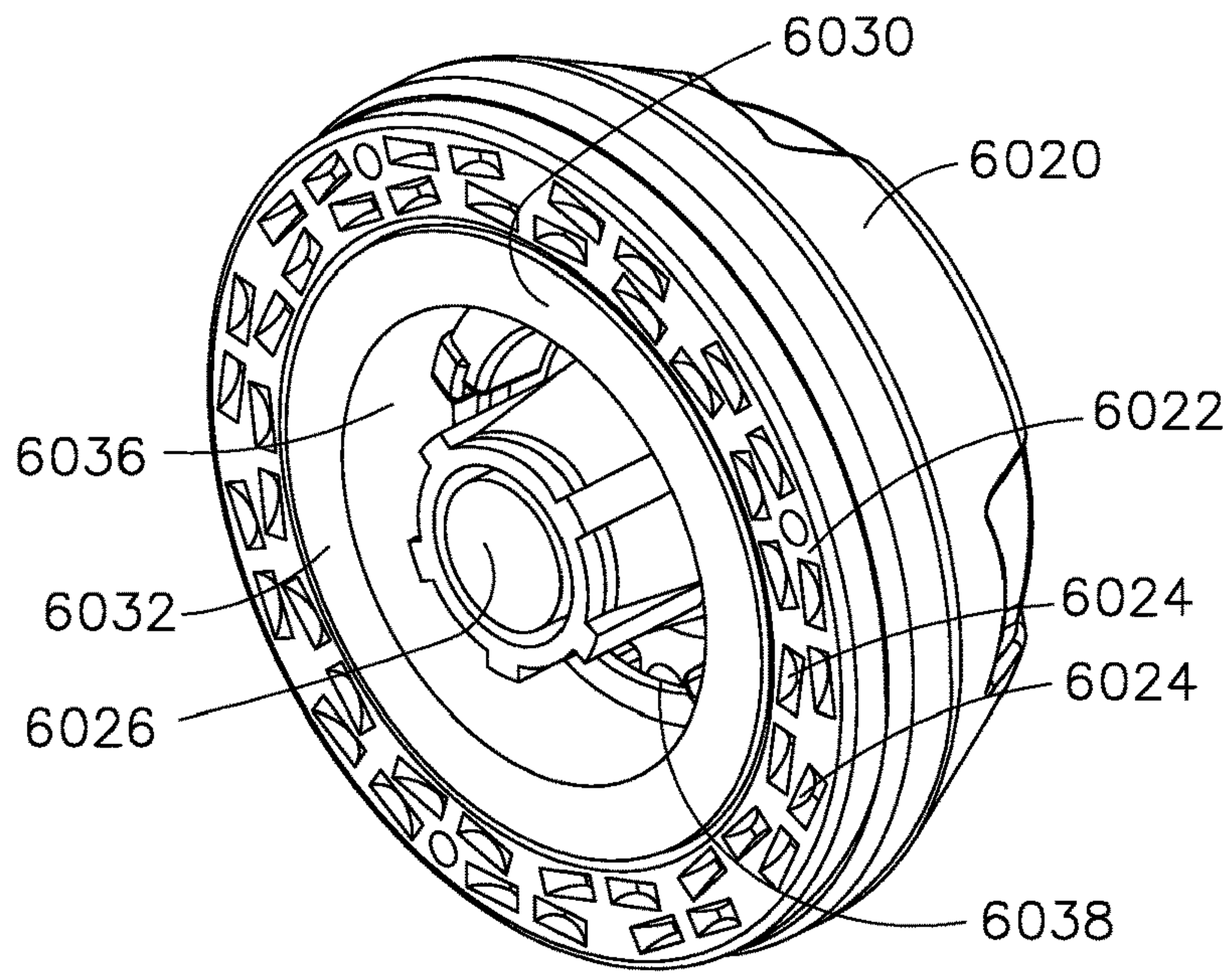
6030
6020
6022
6036
6032
6024
6024
6026
6038

FIG. 84

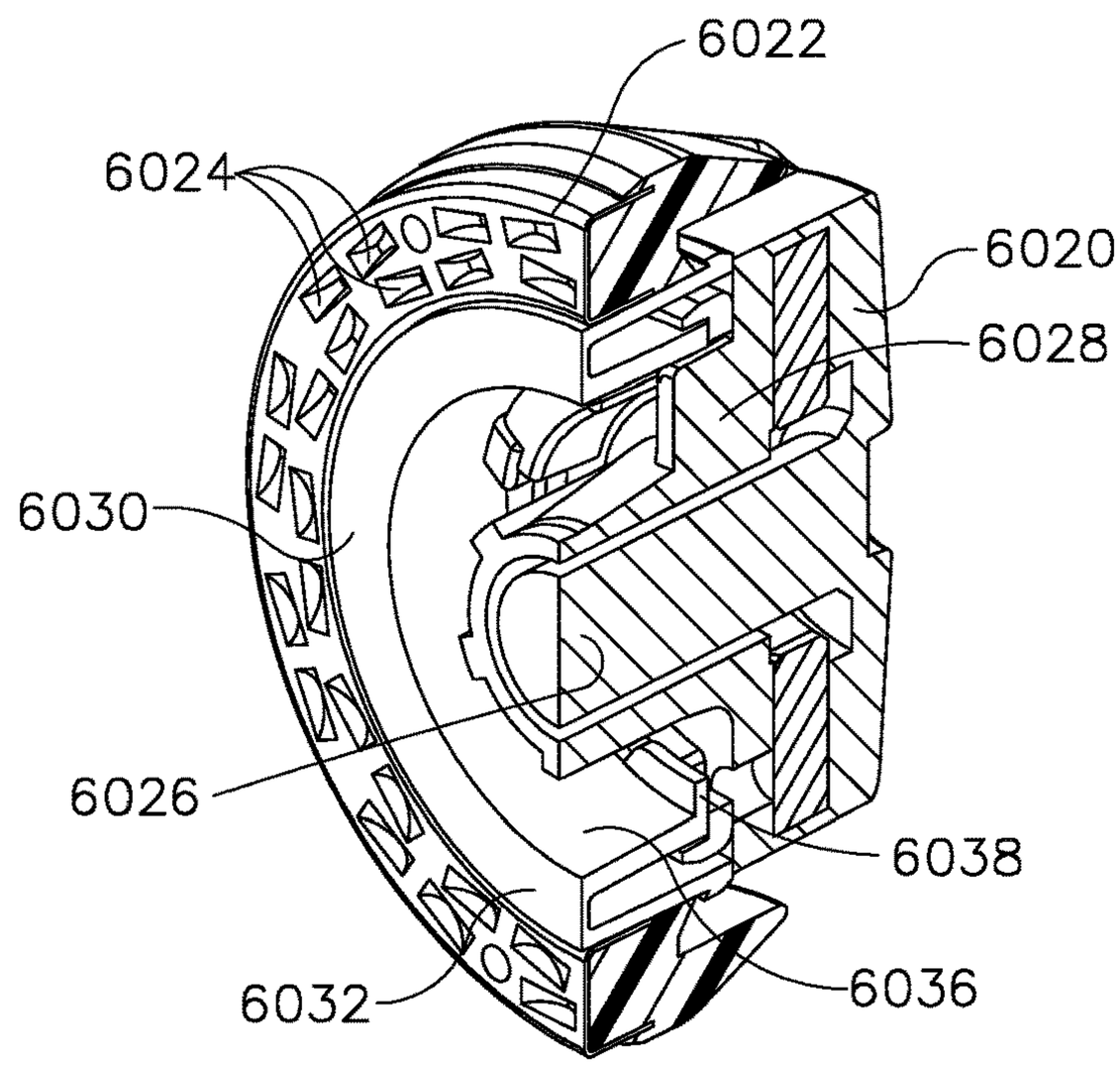
6022
6024
6020
6028
6030
6026
6038
6032
6036

FIG. 85

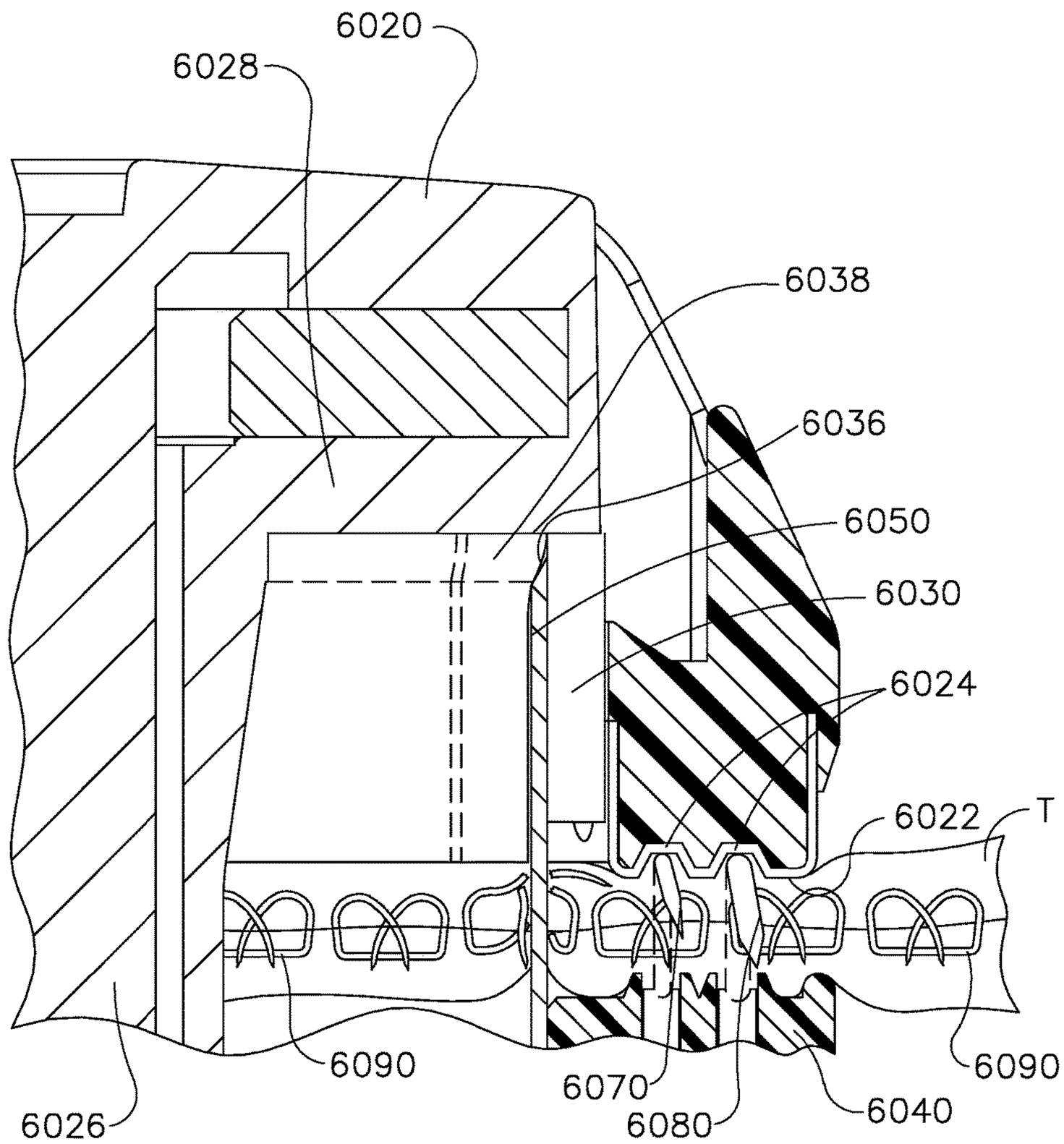
6020
6028
6038
6036
6050
6030
6024
6022
T
6090
6090
6026
6070
6080
6040

FIG. 86

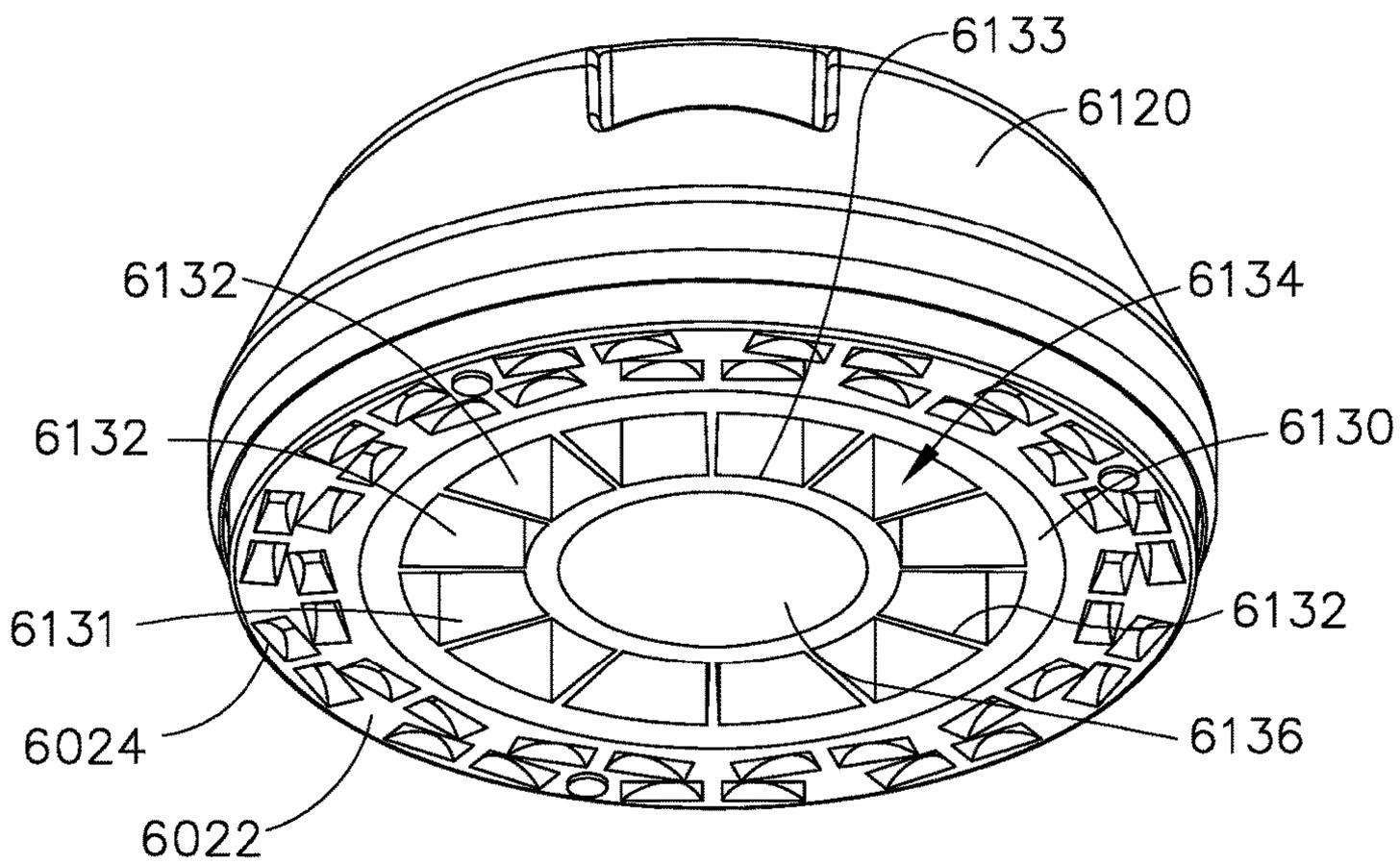
6133
6120
6132
6134
6132
6130
6131
6132
6024
6136
6022

FIG. 87

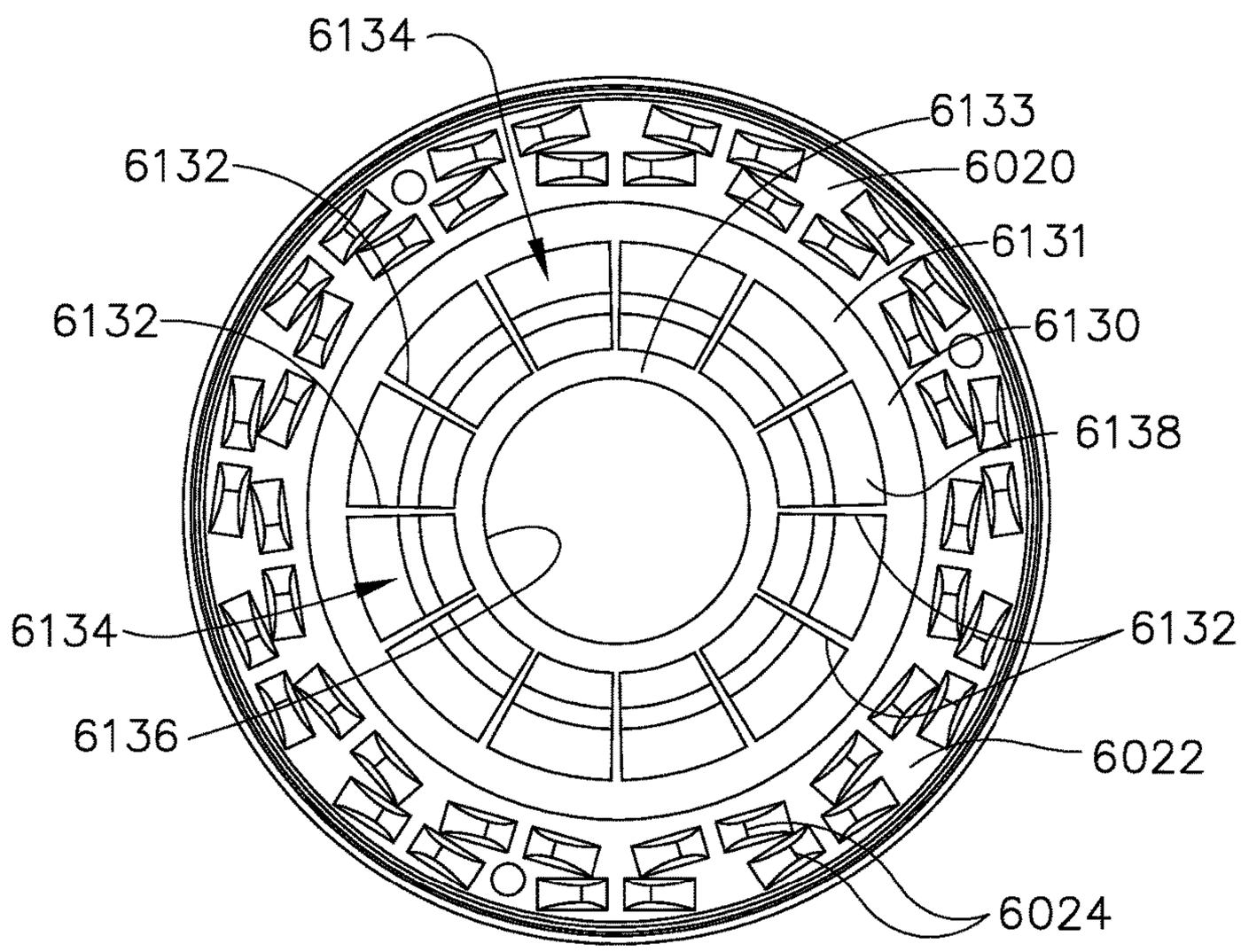
6134
6133
6132
6020
6131
6132
6130
6138
6134
6132
6136
6022
6024

FIG. 88

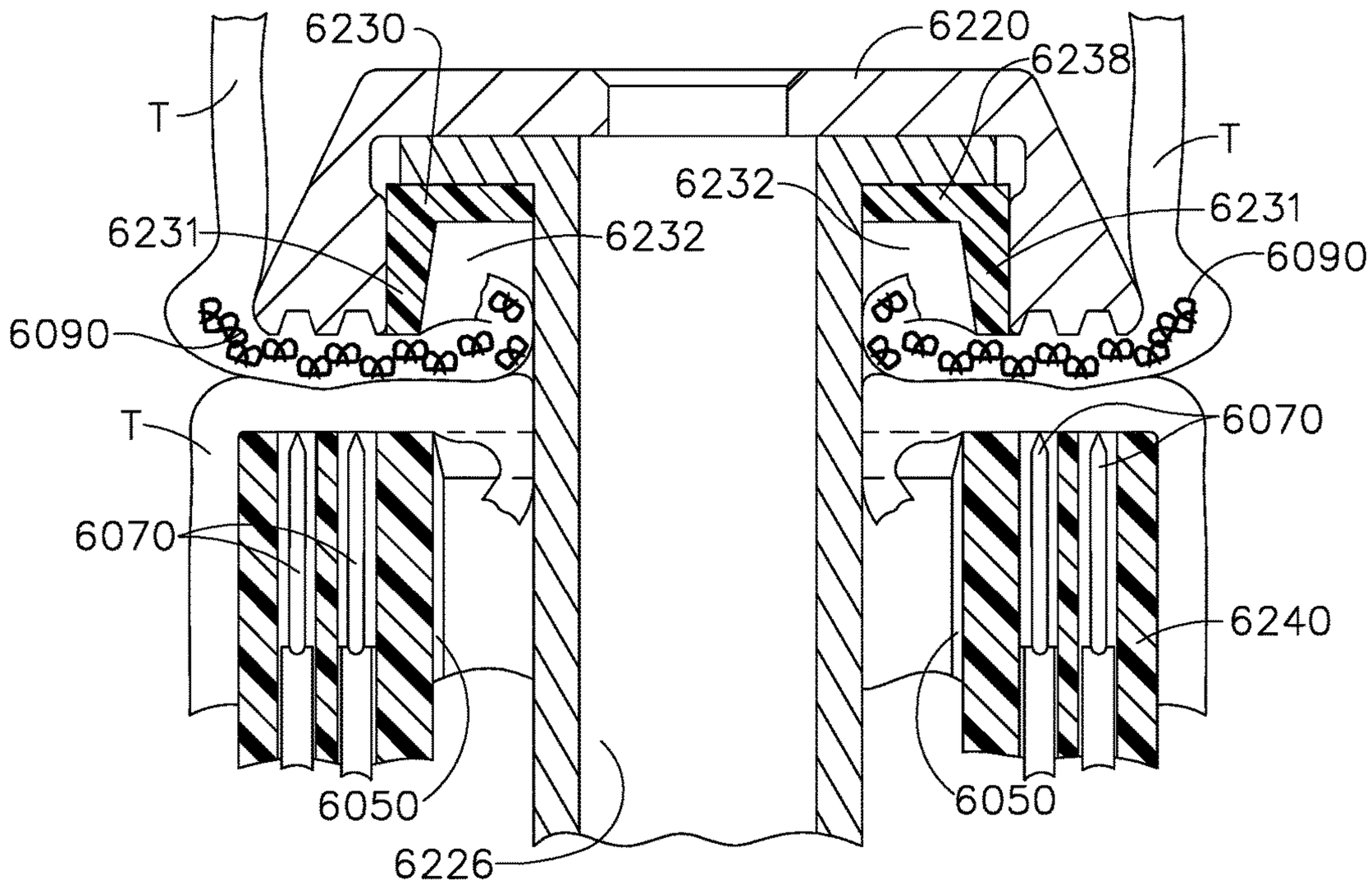
6230
6220
6238
T
T
6232
6231
6231
6232
6090
6090
T
6070
6070
6240
6050
6050
6226

FIG. 89

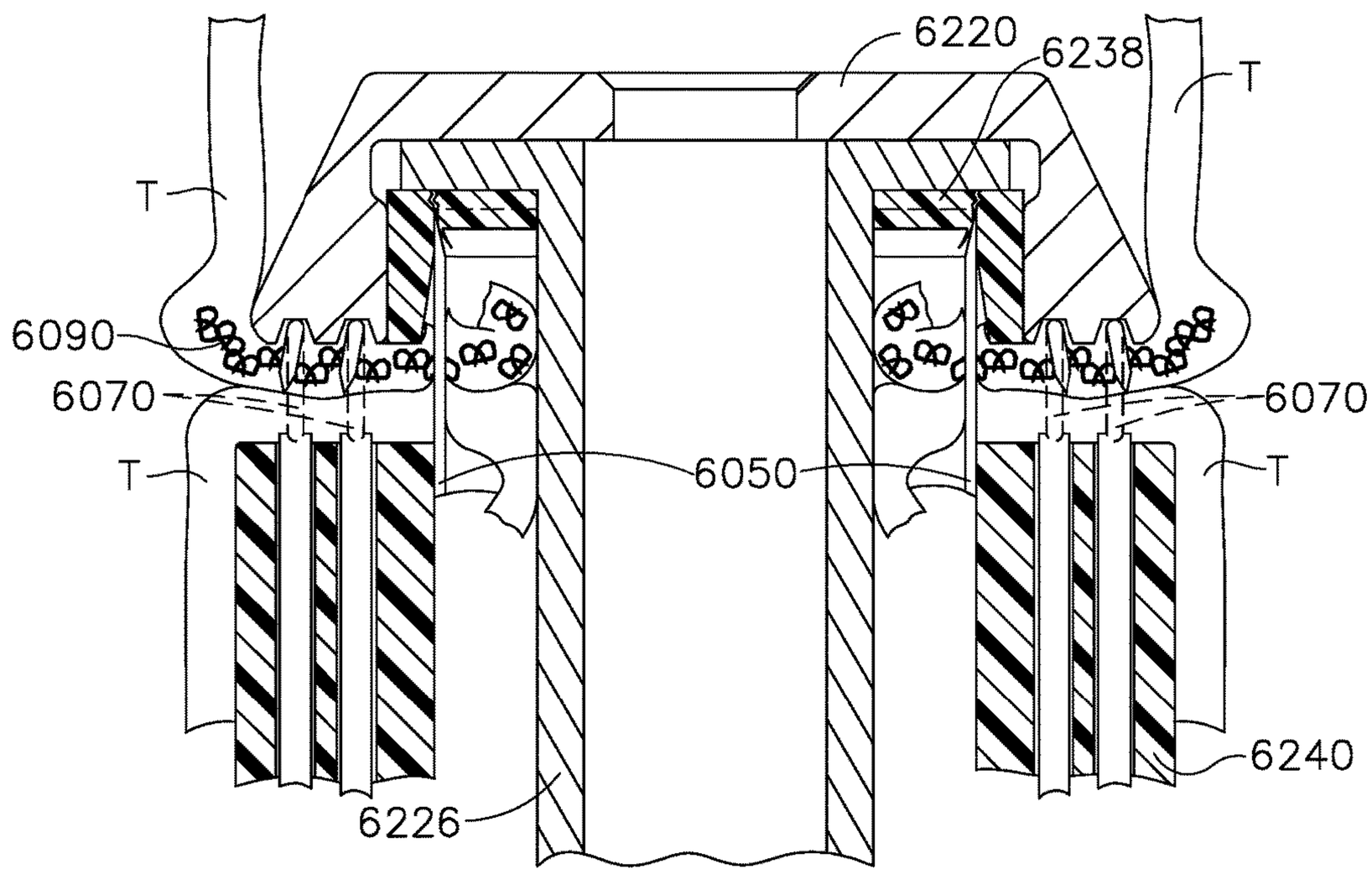
6220
6238
T
T
6090
6070
6070
T
6050
T
6240
6226

FIG. 90

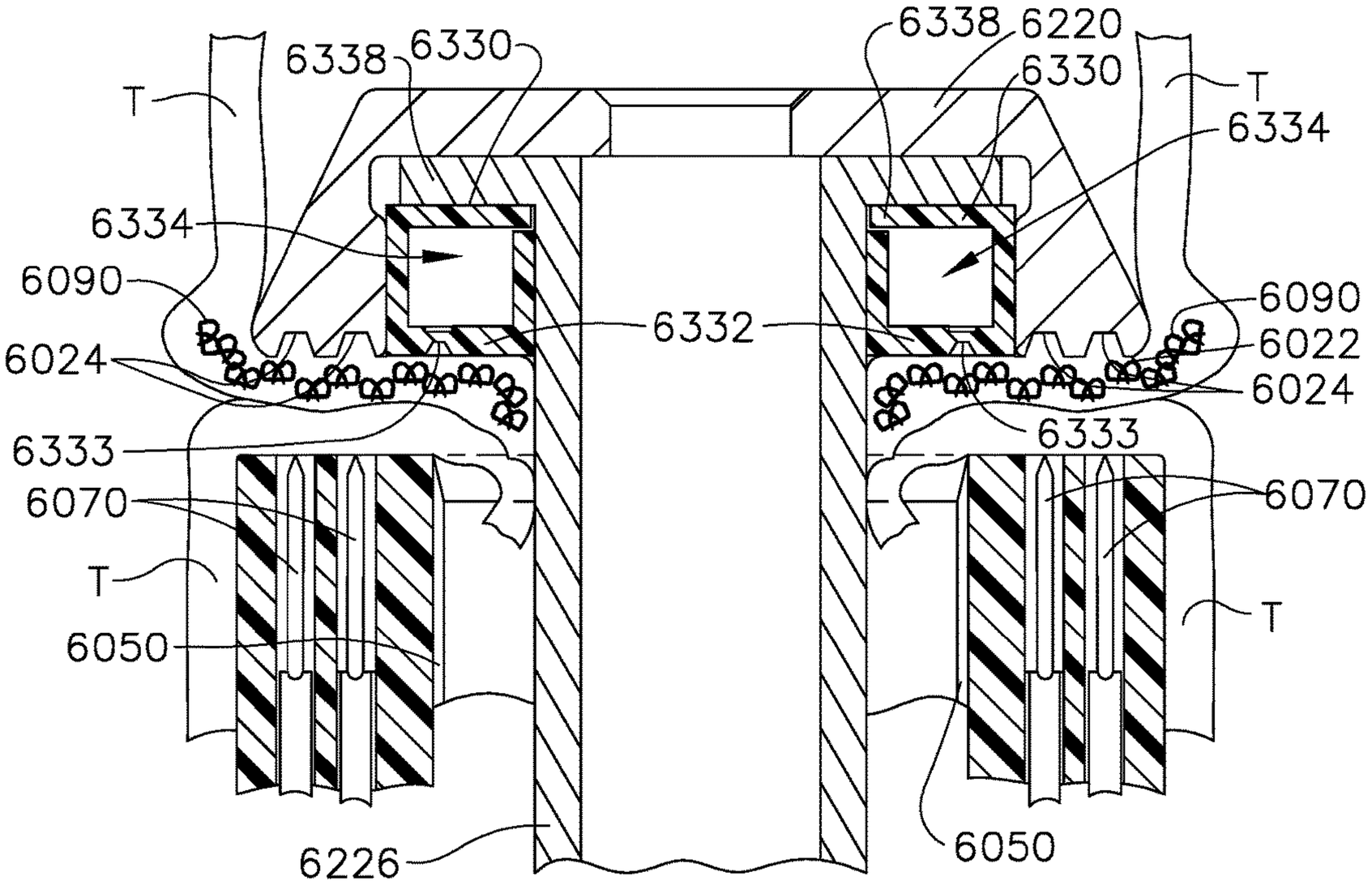
6338
6330
6338
6220
6330
T
T
6334
6334
6090
6090
6332
6022
6024
6024
6333
6333
6070
6070
T
T
6050
6050
6226

FIG. 91

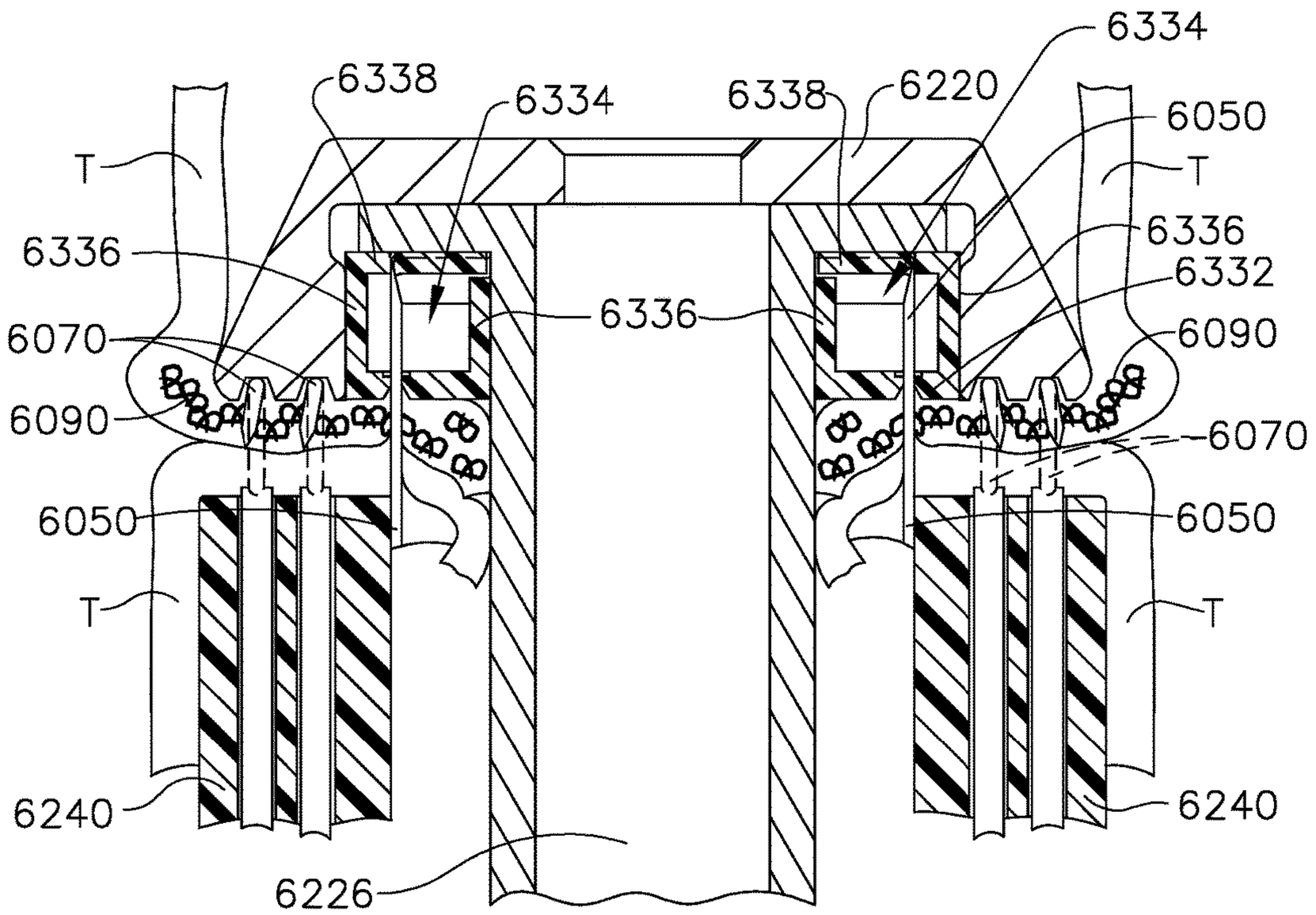
6334
6338
6334
6338
6220
6050
T
T
6336
6336
6332
6336
6070
6090
6090
6070
6050
6050
T
T
6240
6240
6226

FIG. 92

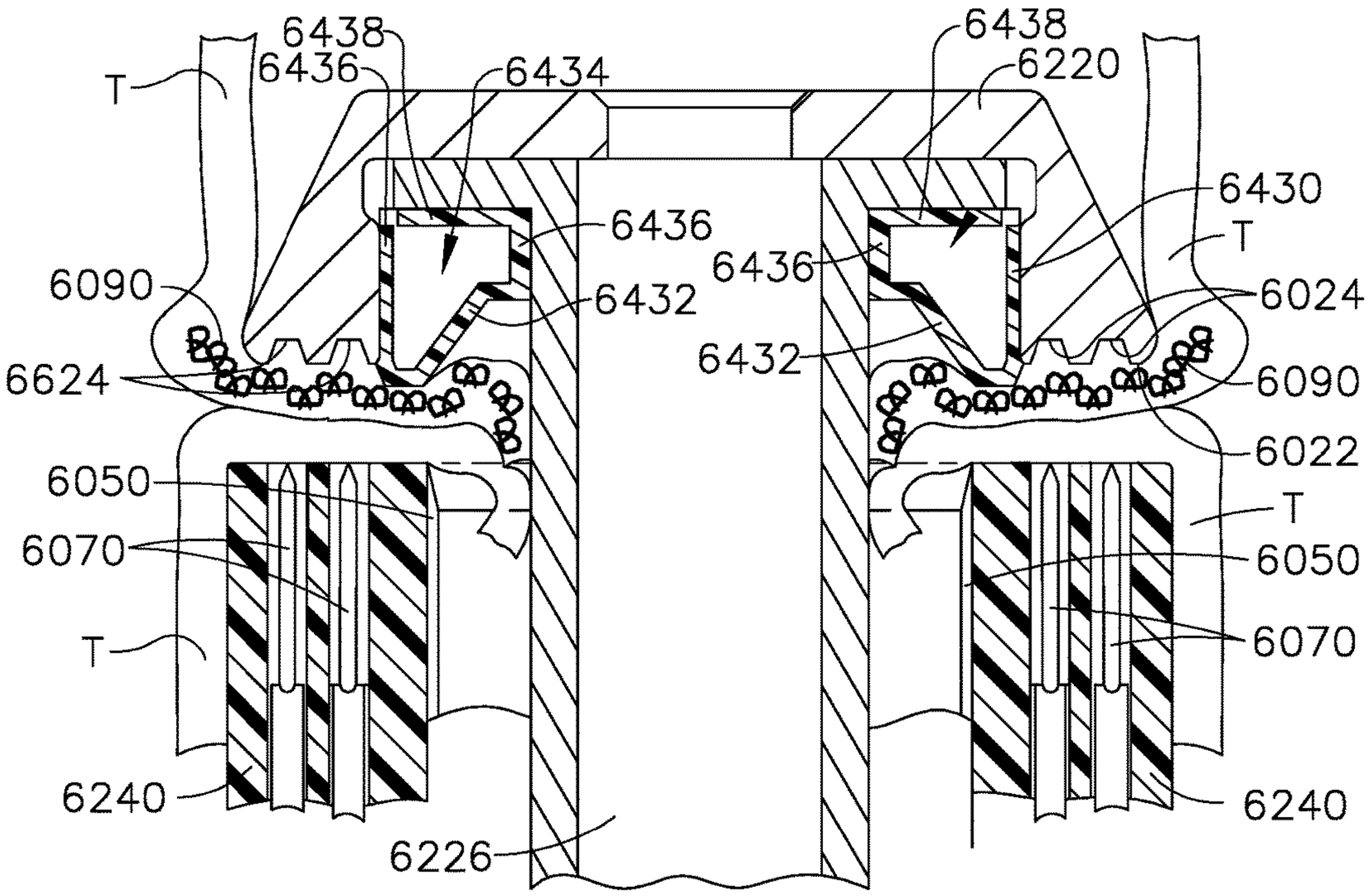
6438
6436
6434
6438
6220
T
6430
T
6436
6436
6090
6432
6024
6432
6624
6090
6022
6050
T
6070
6050
T
6070
6240
6240
6226

FIG. 93

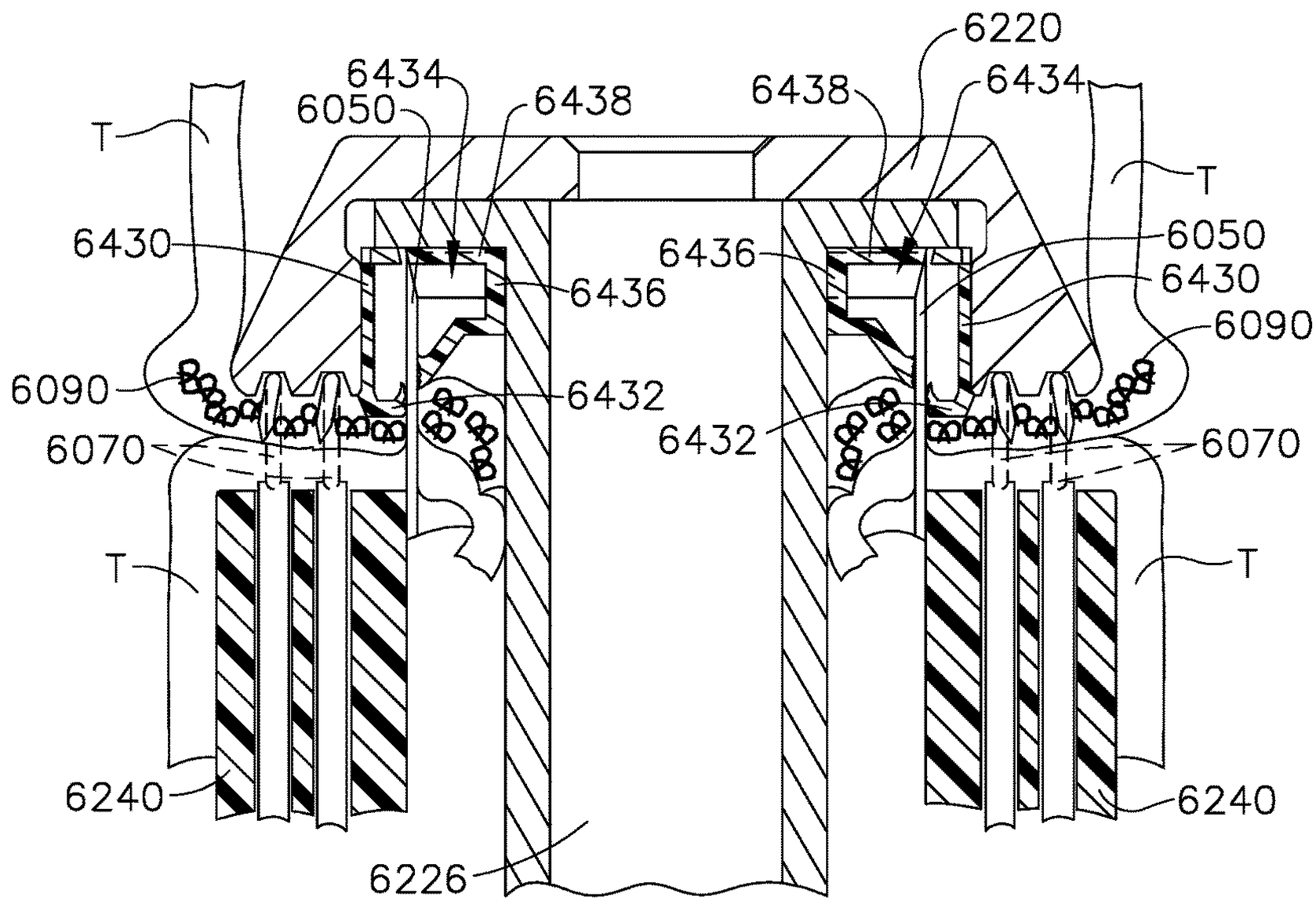
6220
6434
6438
6434
6050
6438
T
T
6050
6430
6436
6430
6436
6090
6090
6432
6432
6070
6070
T
T
6240
6240
6226

FIG. 94

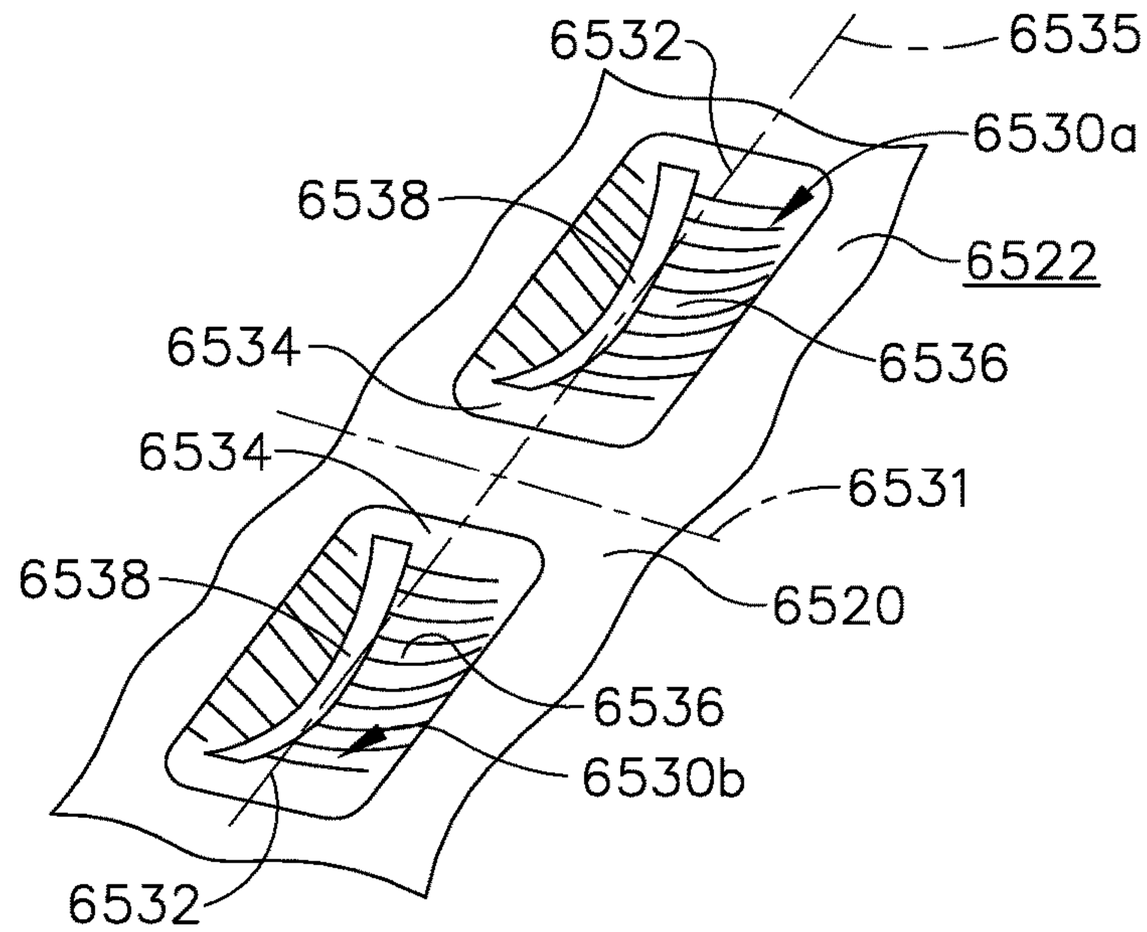
6532
6535
6530a
6538
6522
6534
6536
6534
6531
6538
6520
6536
6530b
6532

FIG. 95

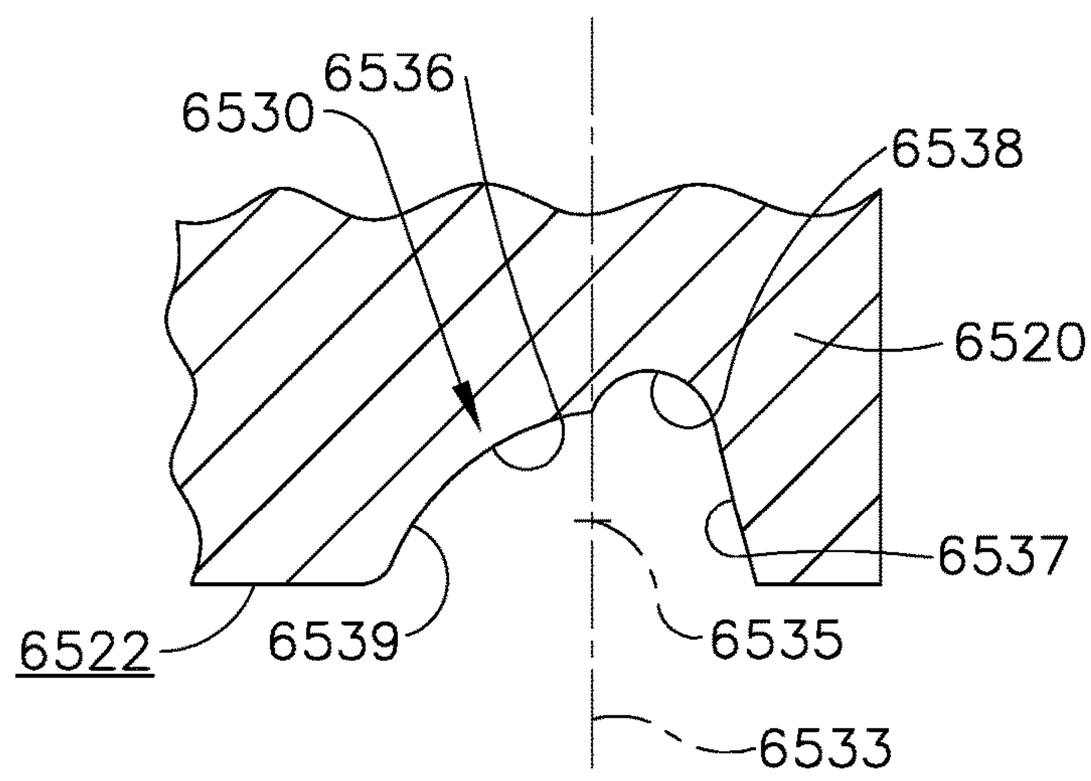
6536
6530
6538
6520
6537
6522
6539
6535
6533

FIG. 96

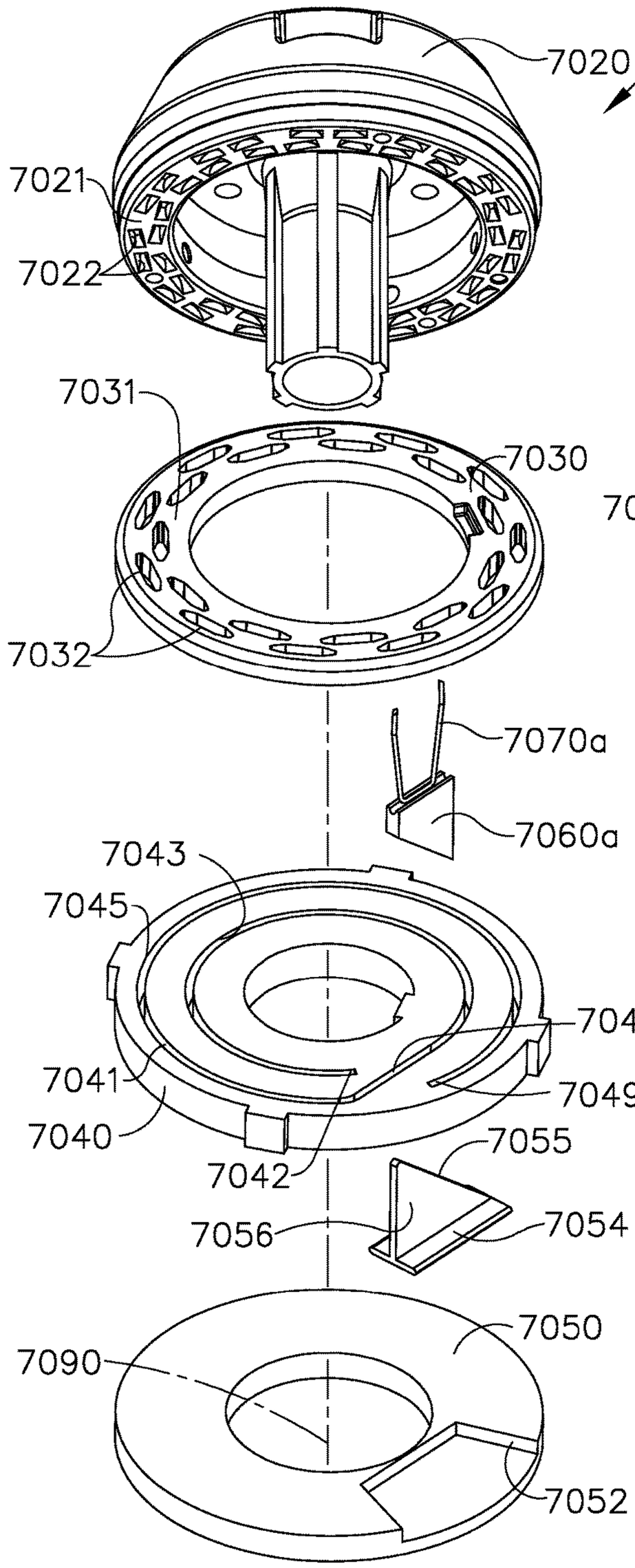

FIG. 97

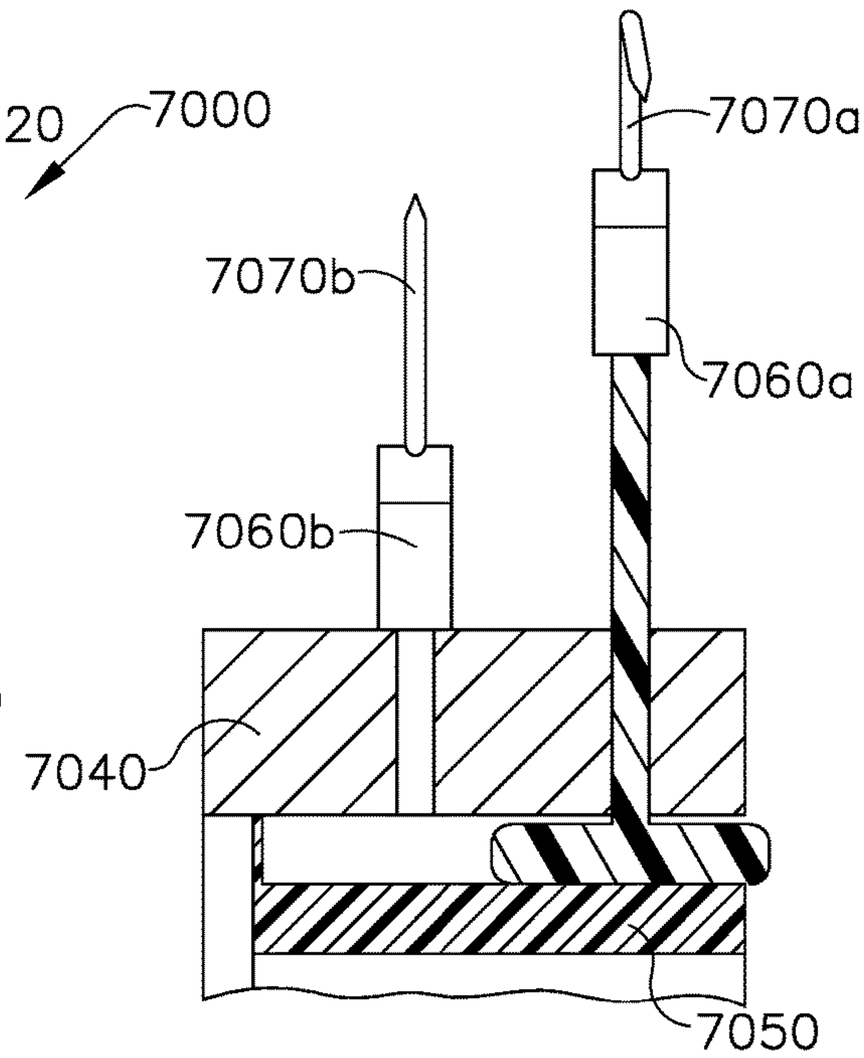

FIG. 98

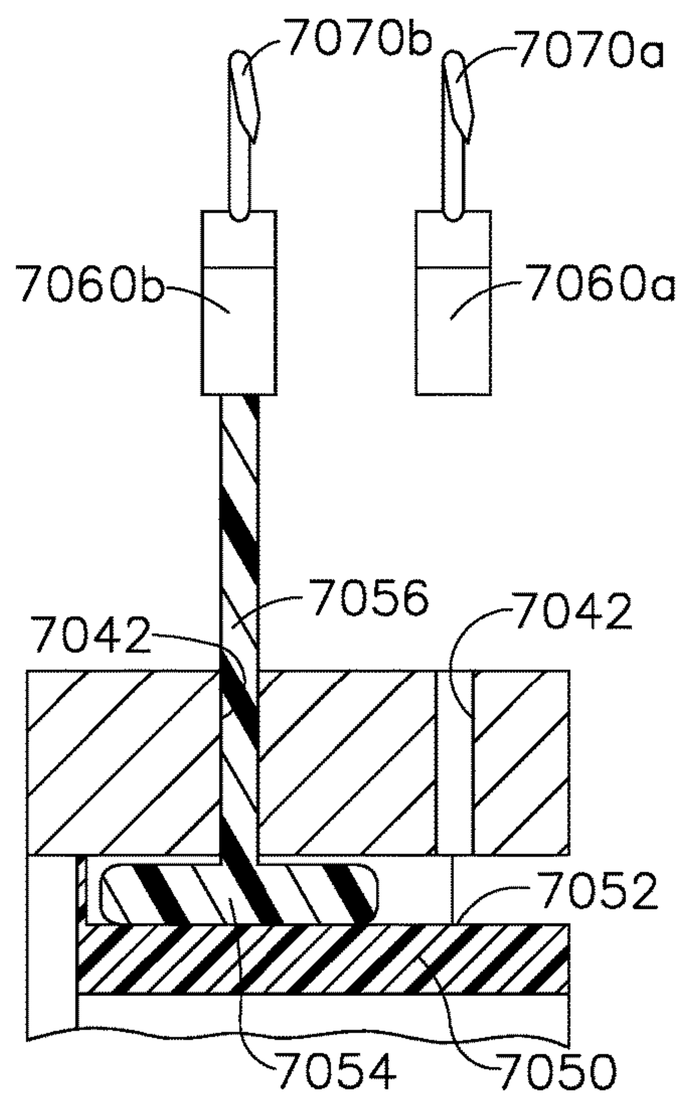

FIG. 99

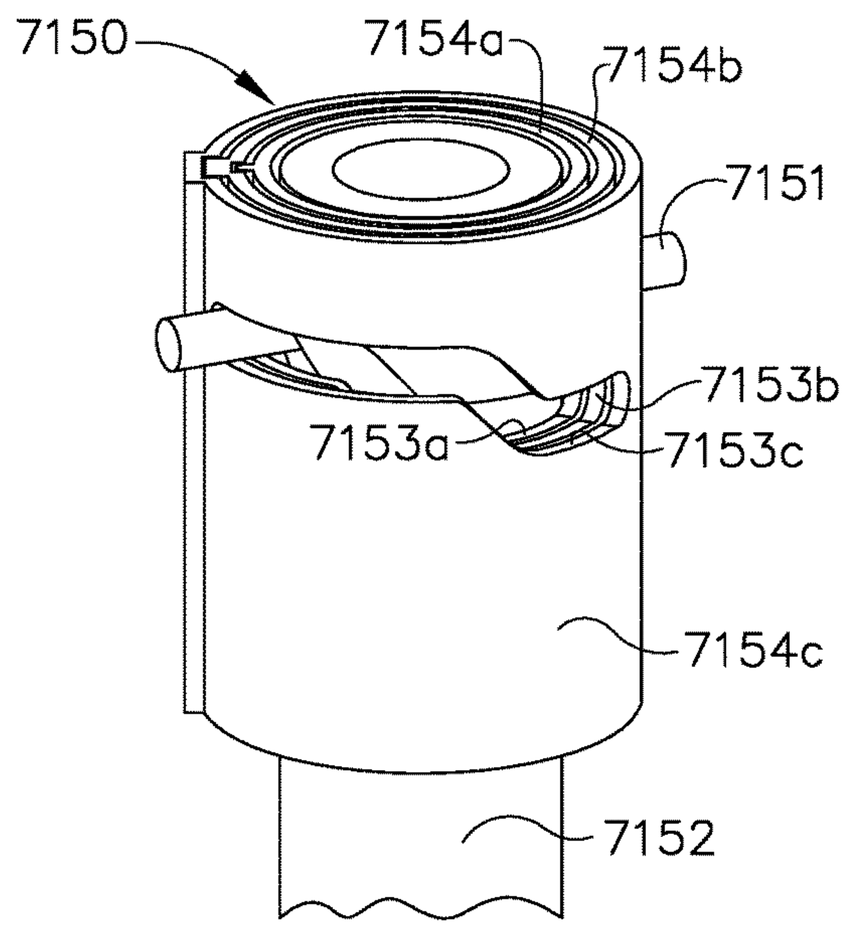

FIG. 100

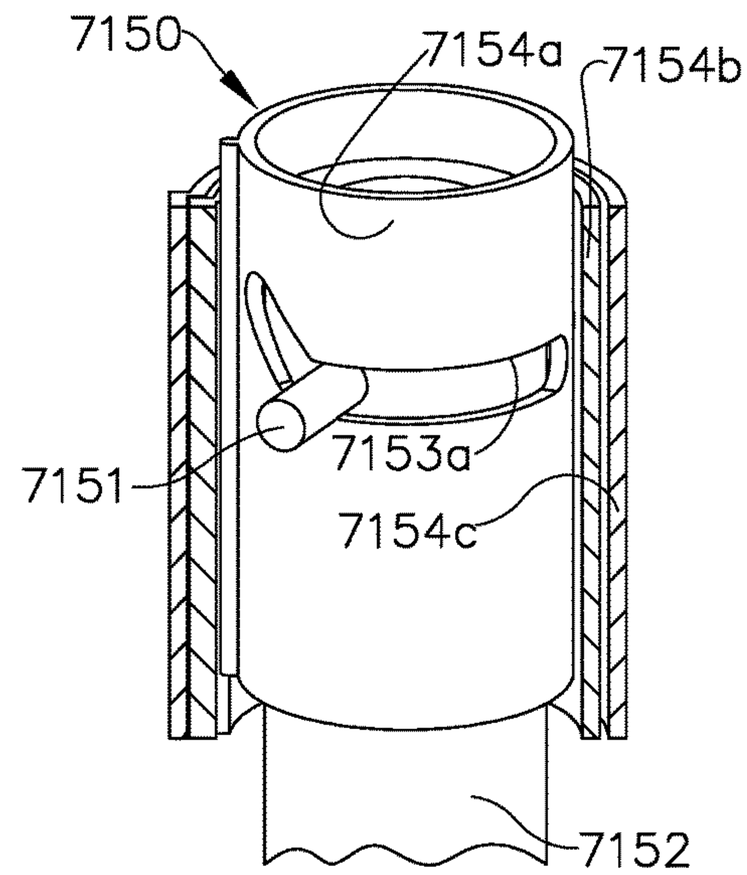

FIG. 101

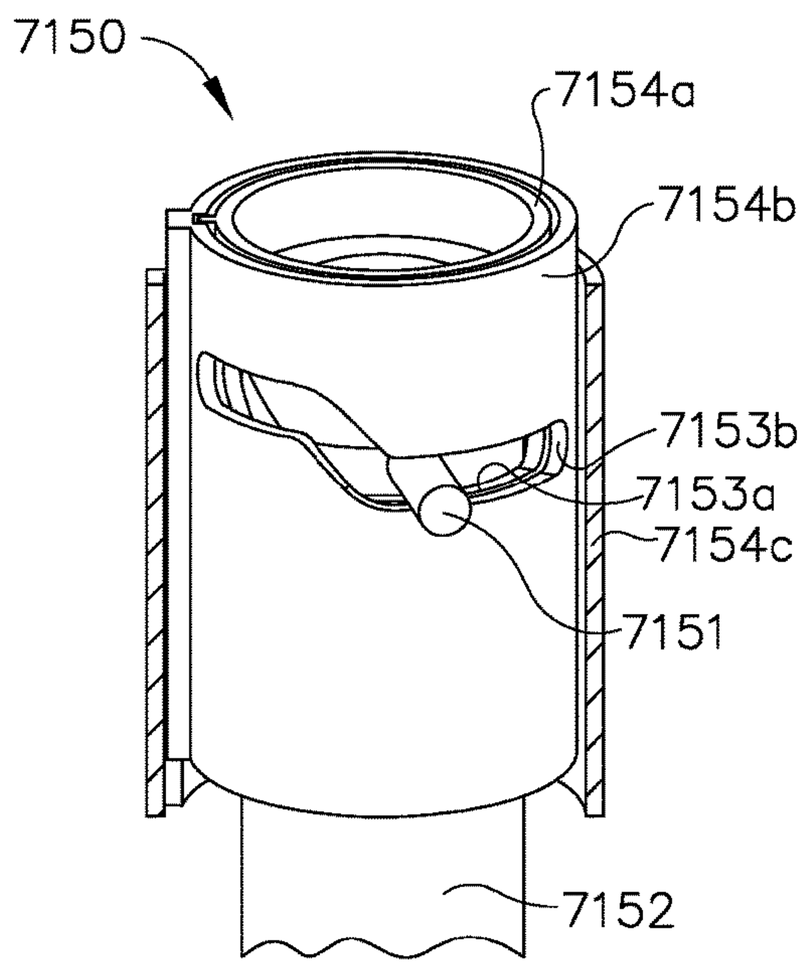

FIG. 102

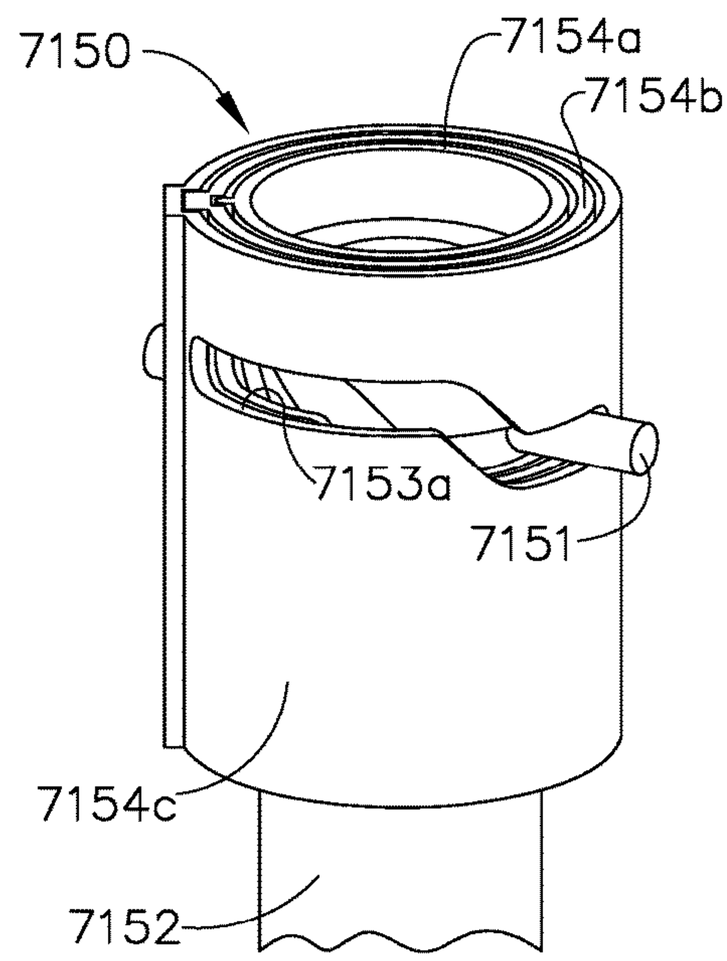

FIG. 103

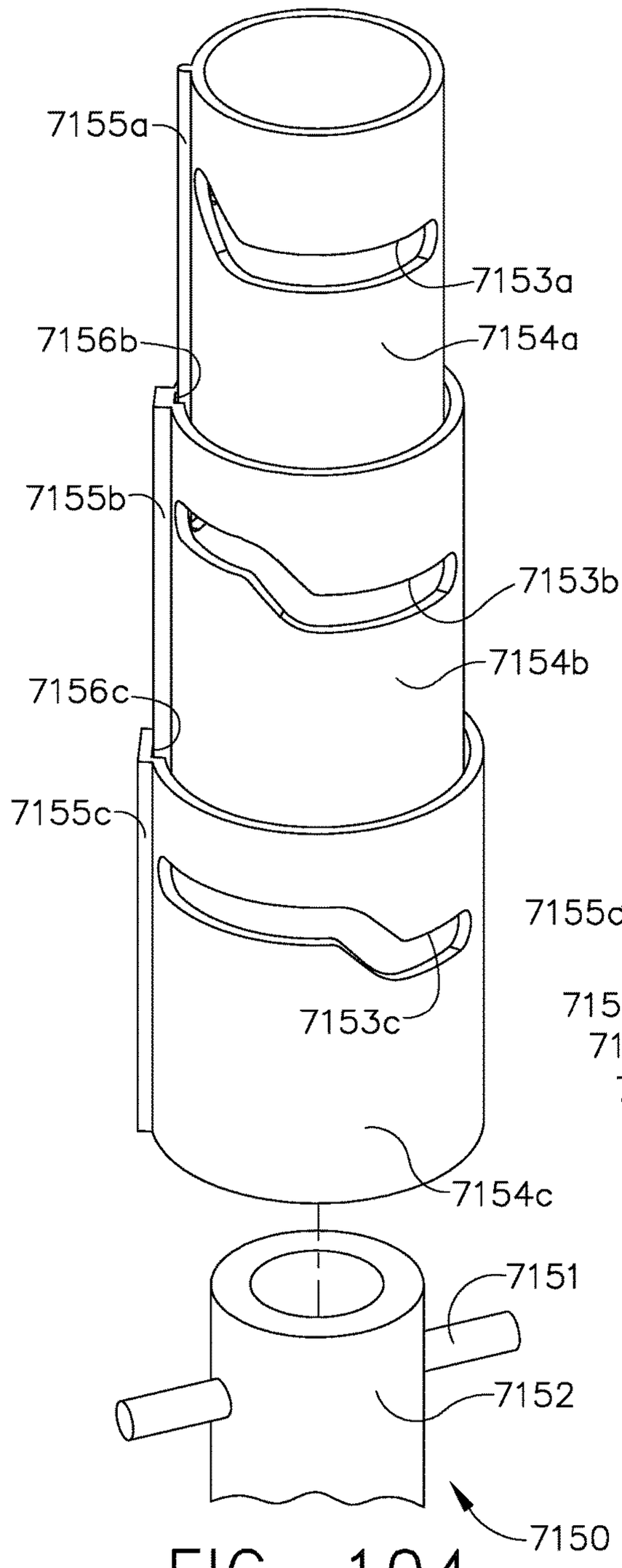

FIG. 104

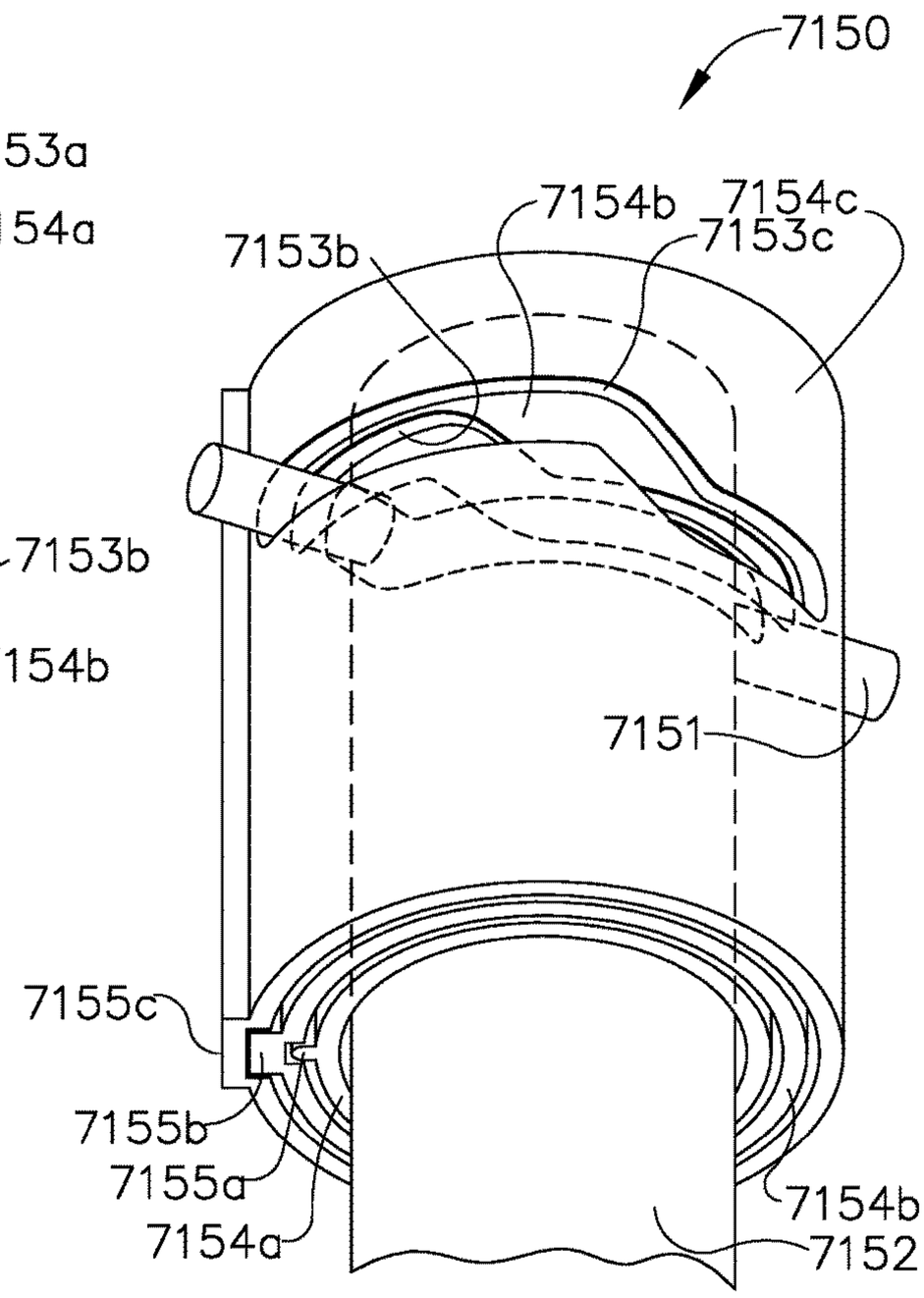

FIG. 105

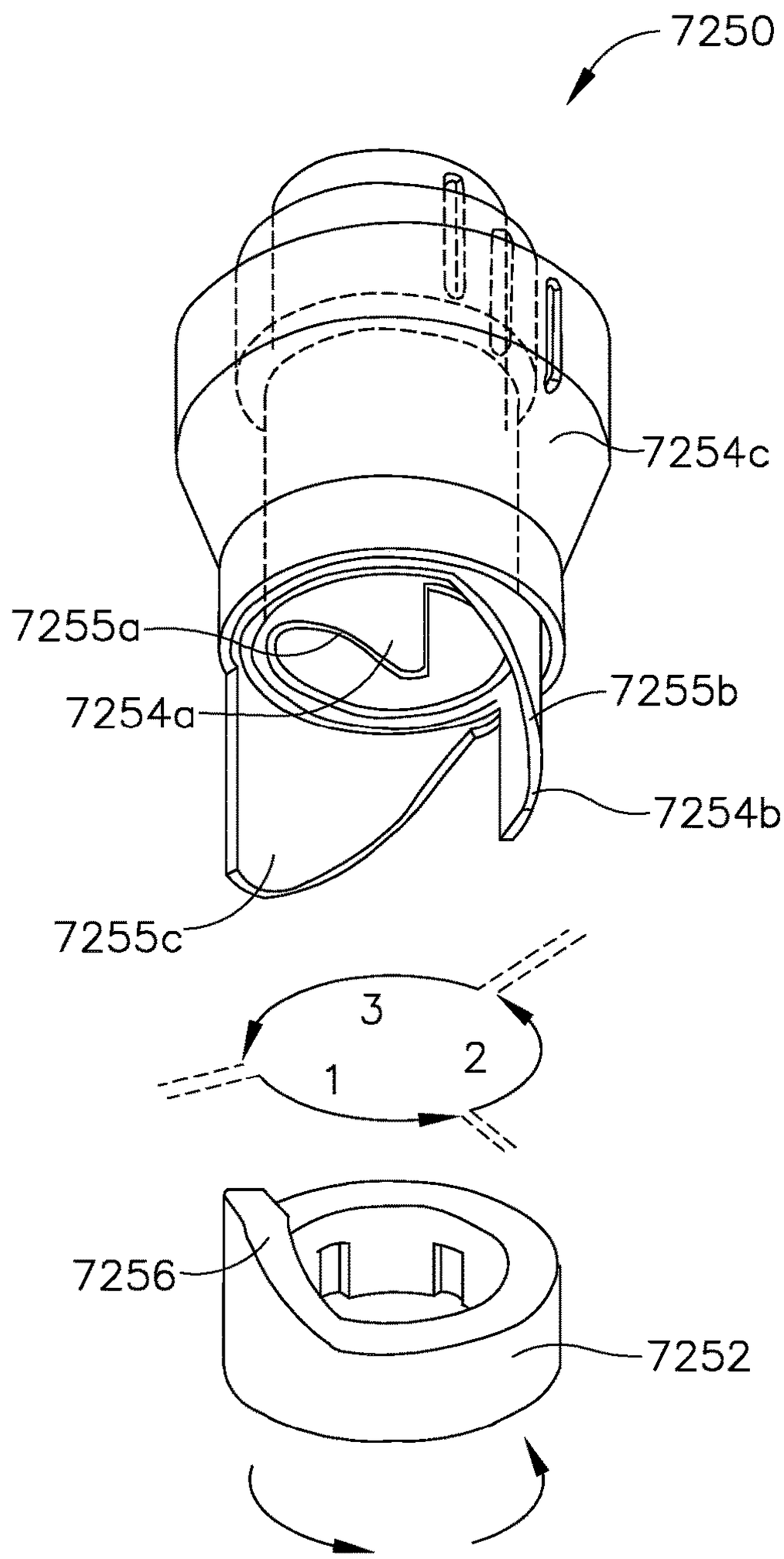

FIG. 106

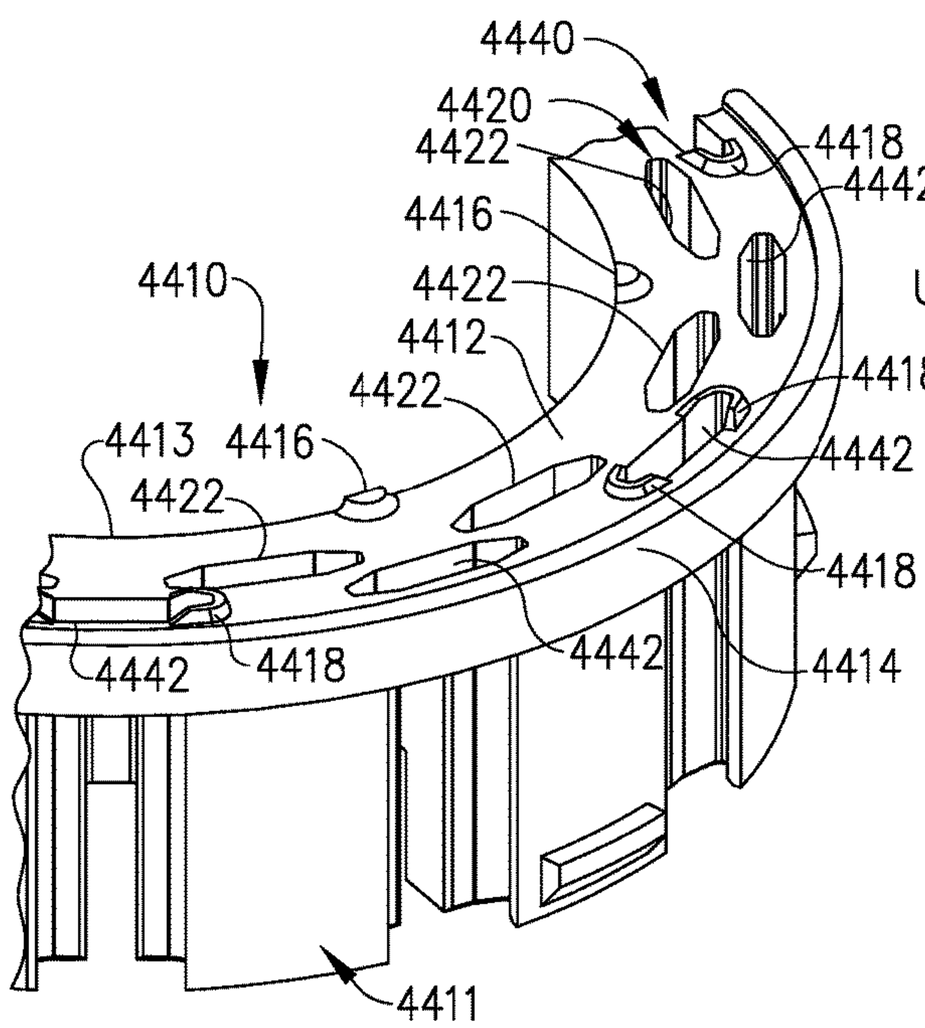

FIG. 107

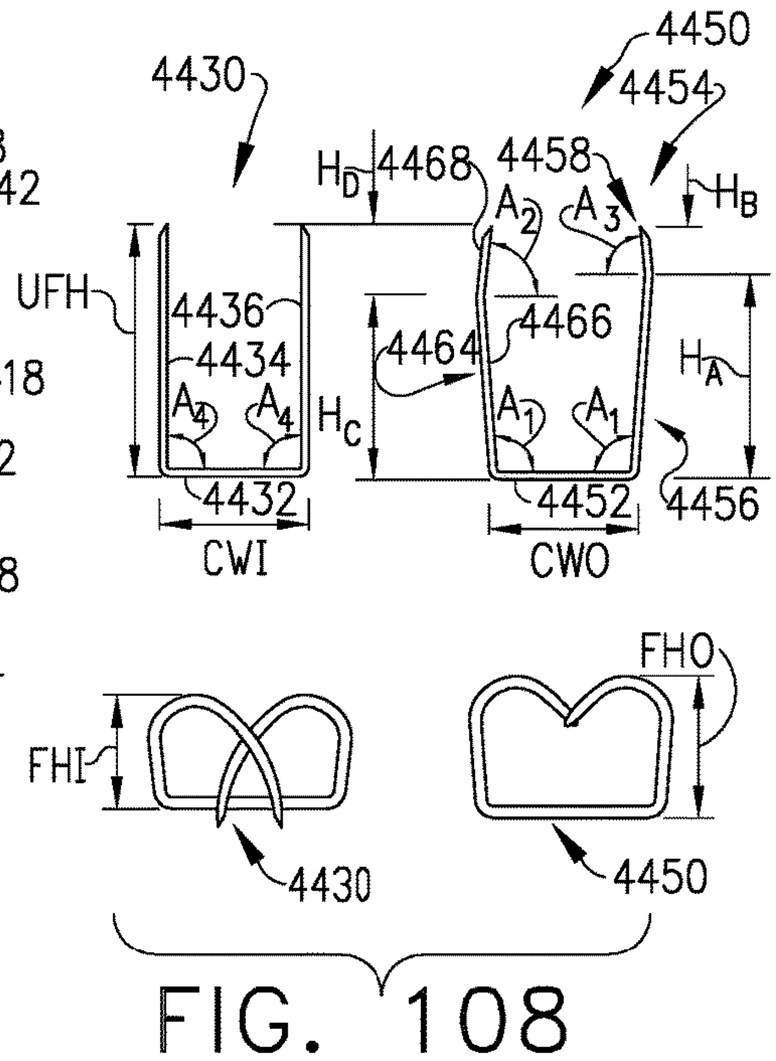

FIG. 108

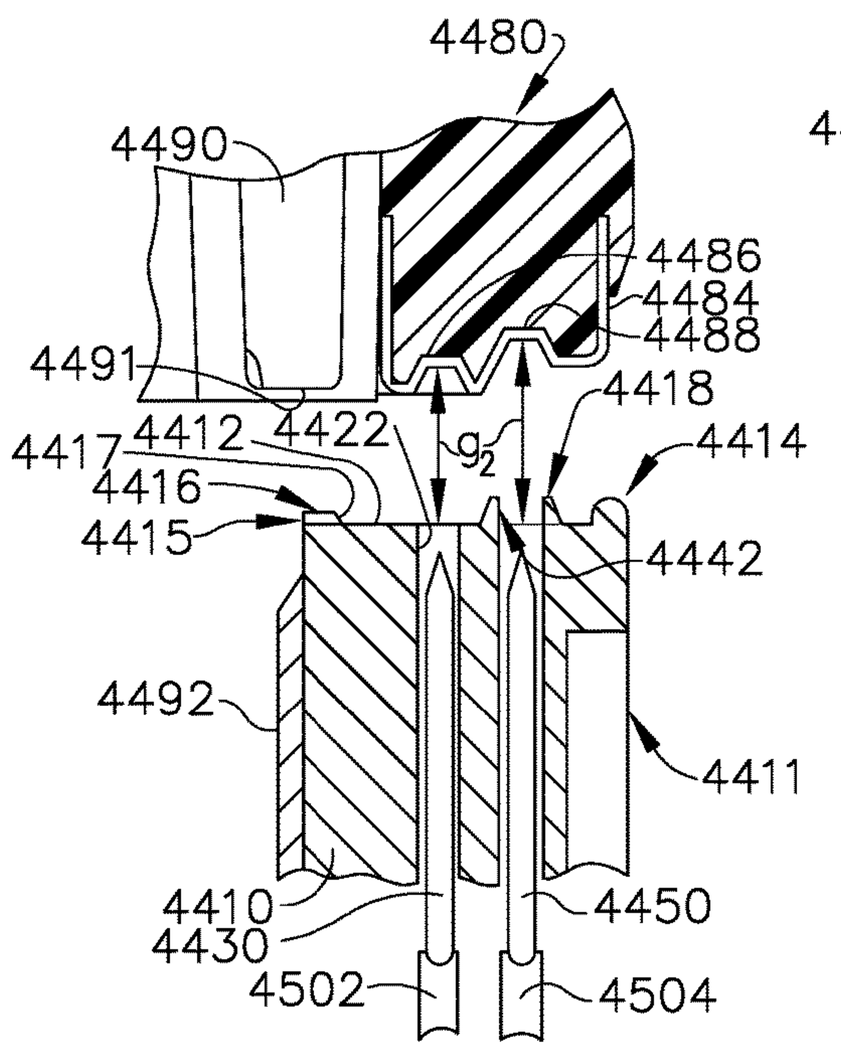

FIG. 109

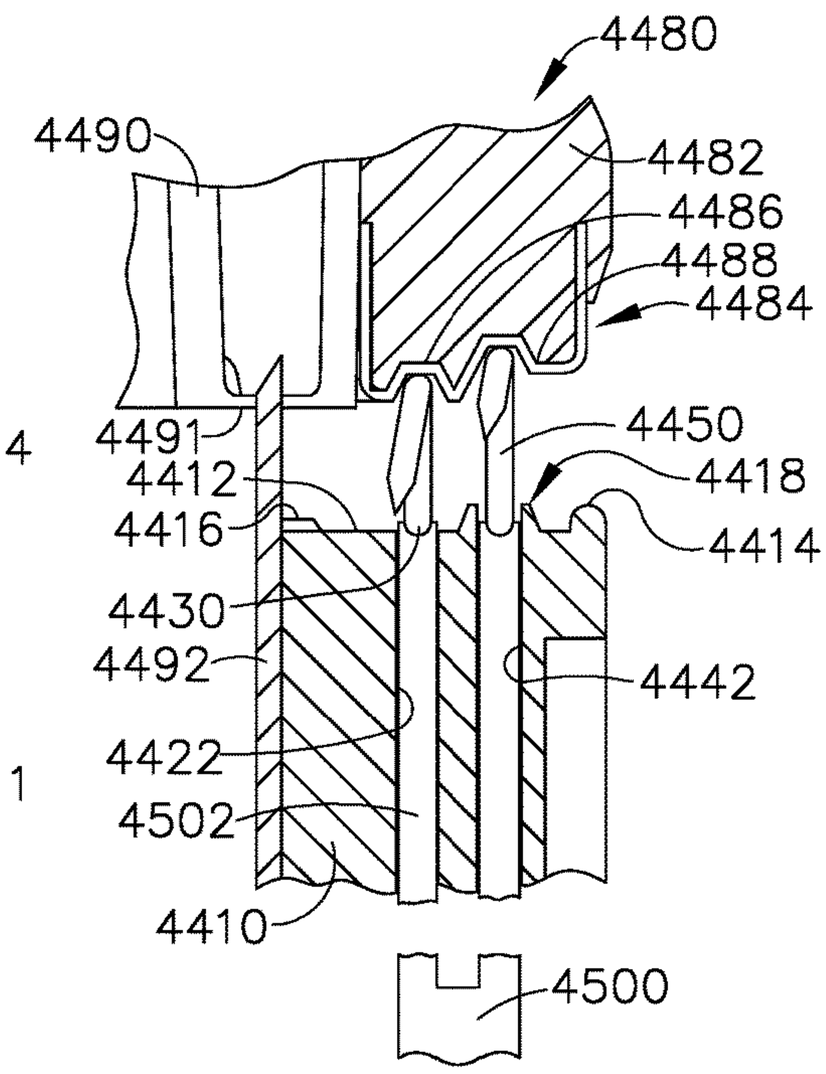

FIG. 110

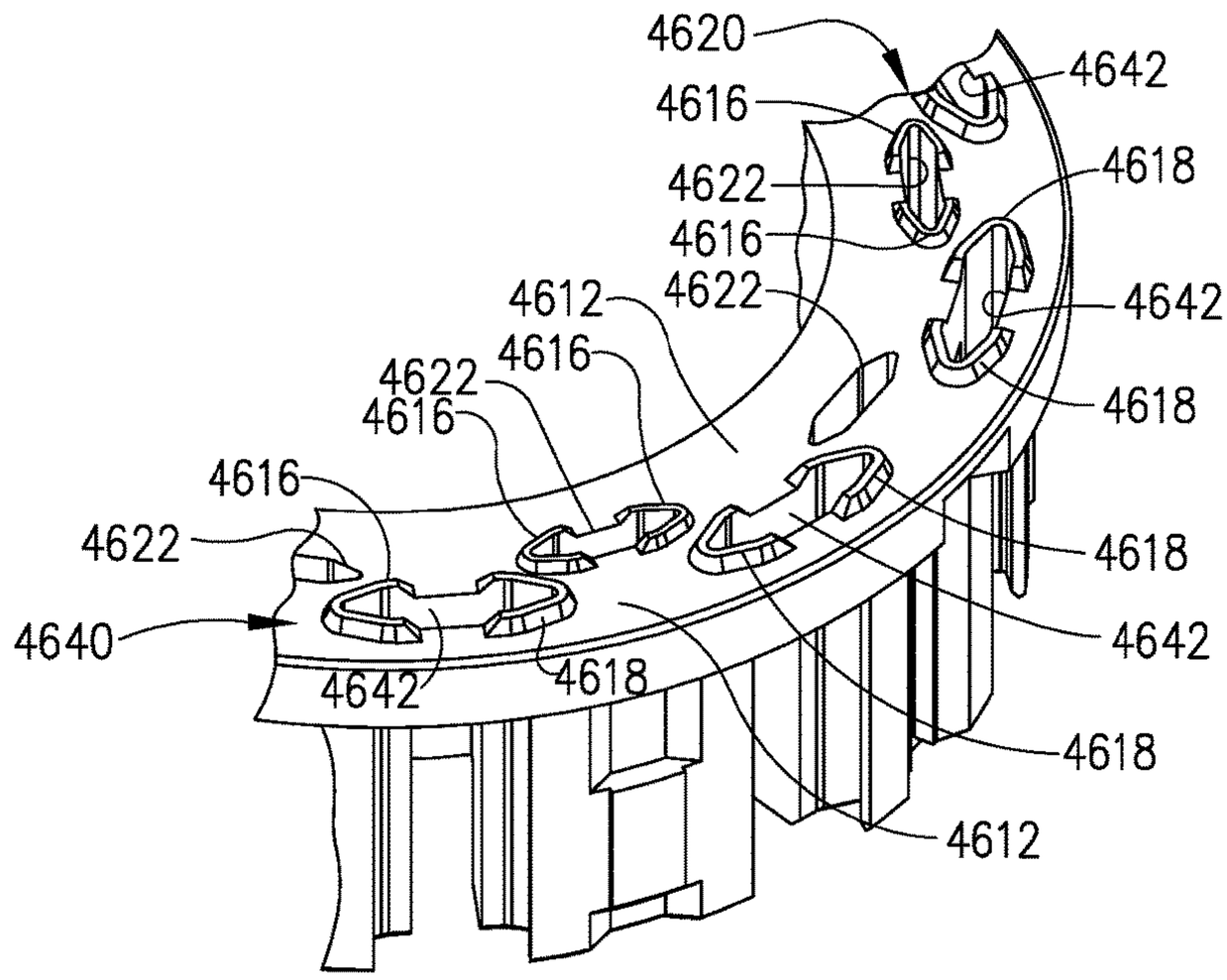

FIG. 111

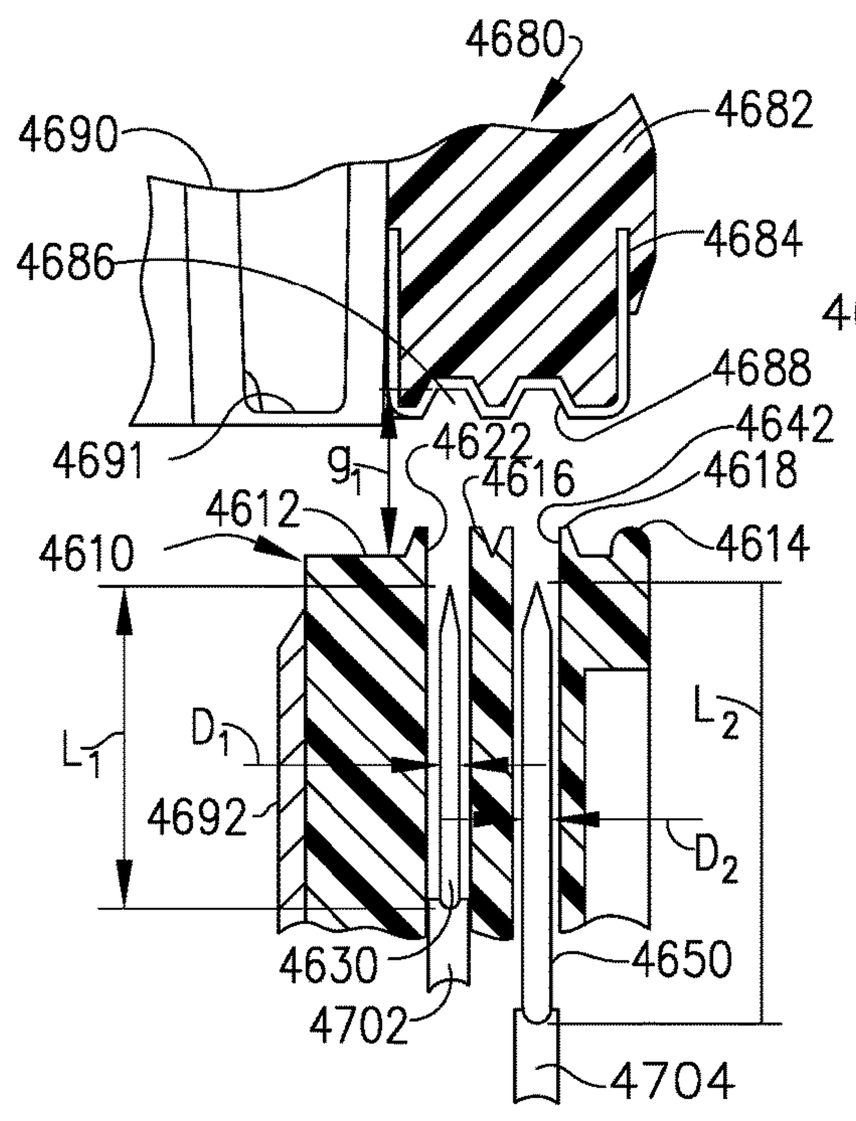

FIG. 112

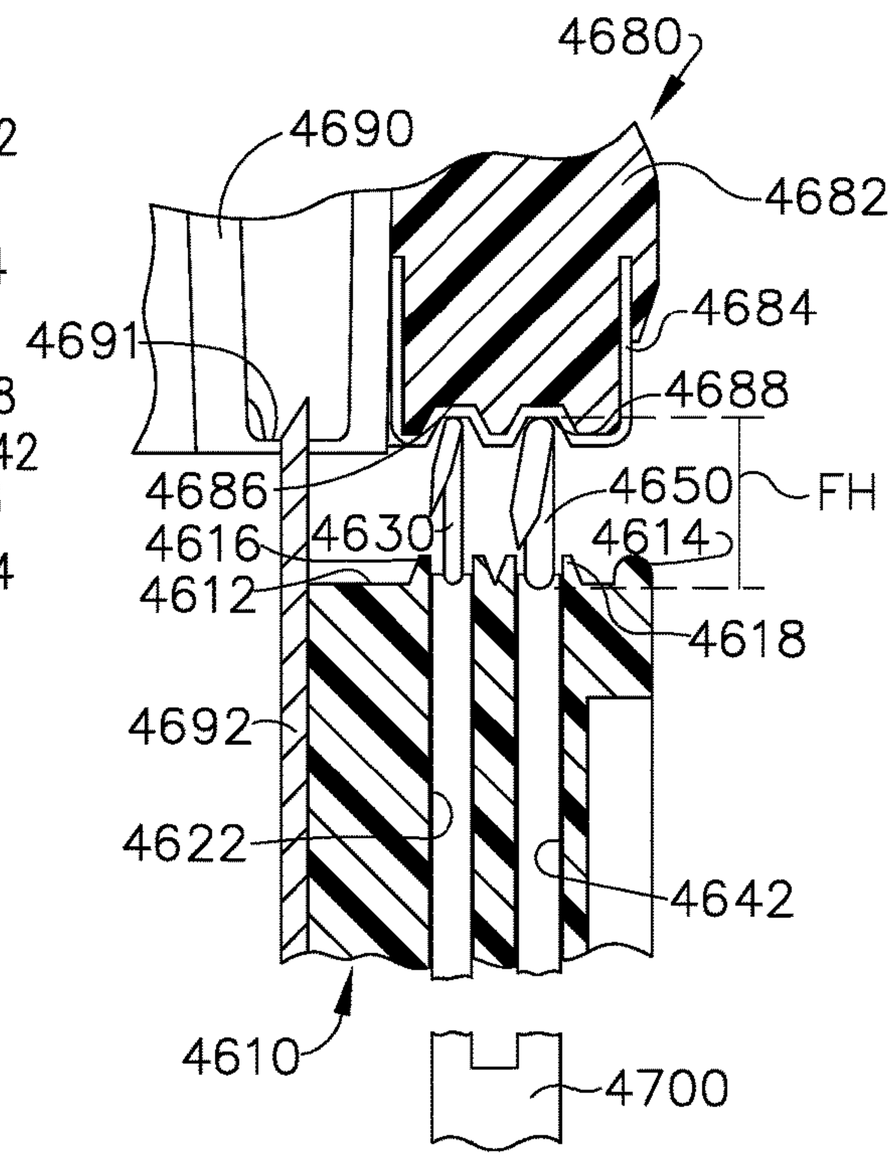

FIG. 113

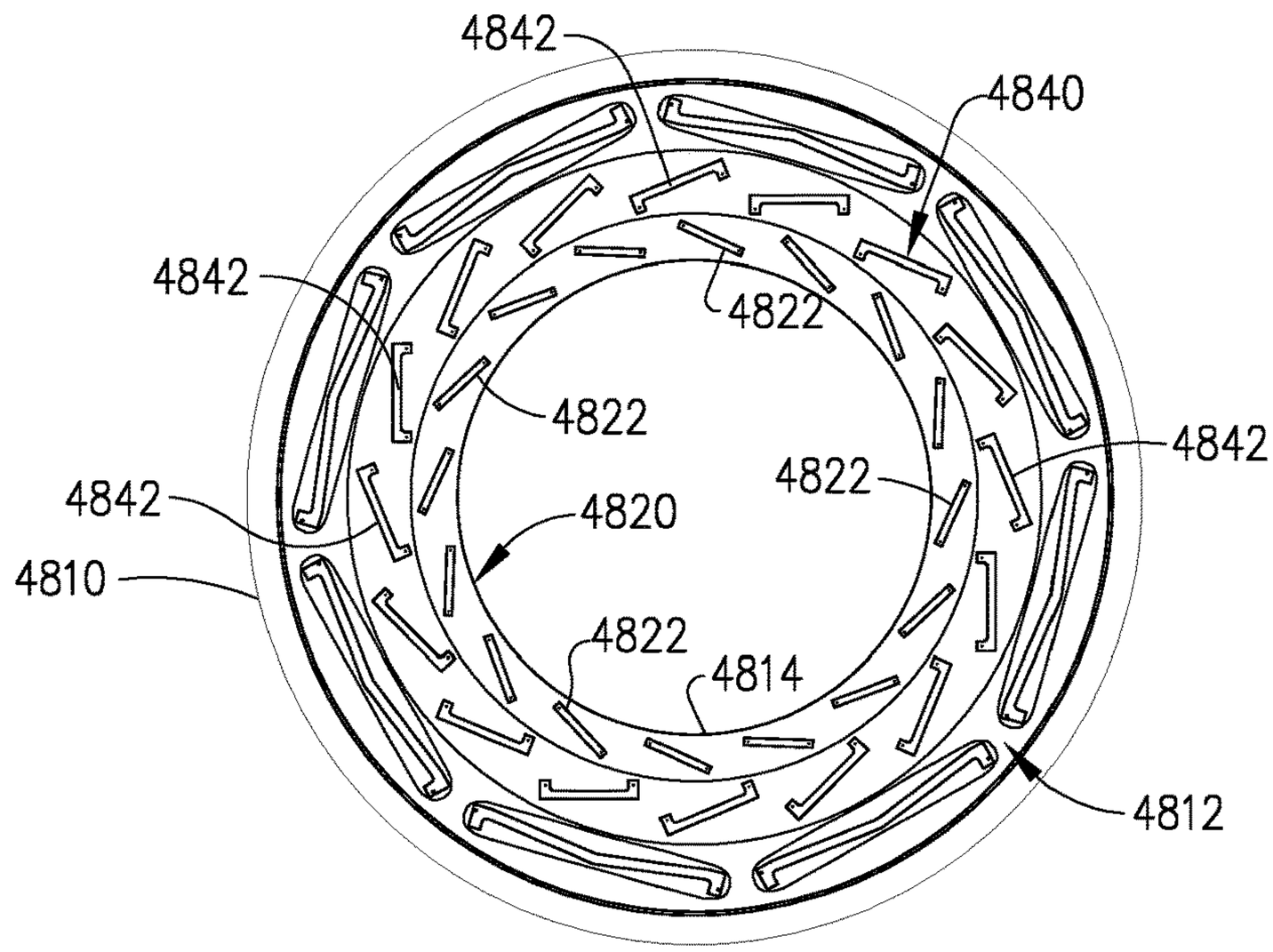

FIG. 114

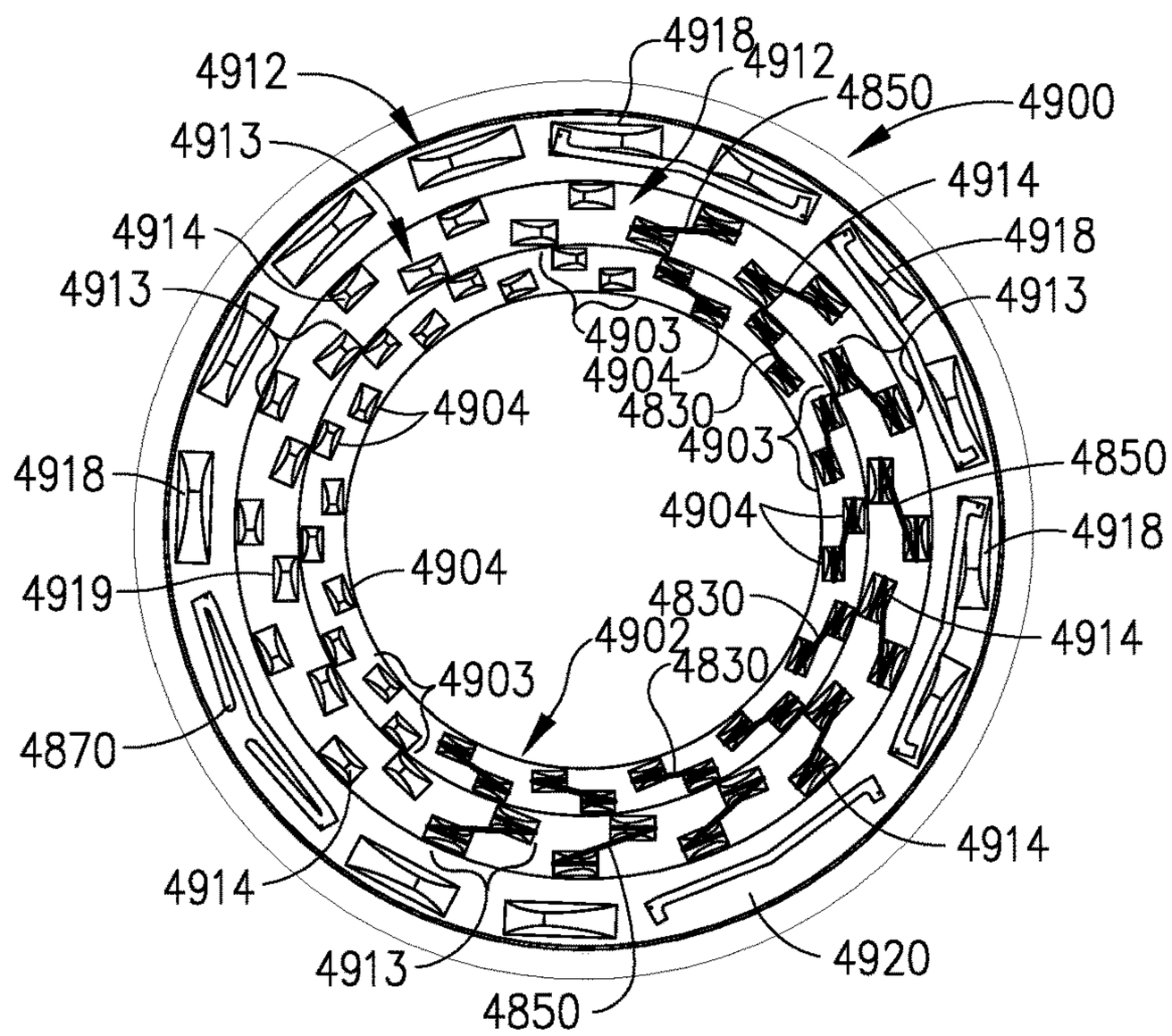

FIG. 115

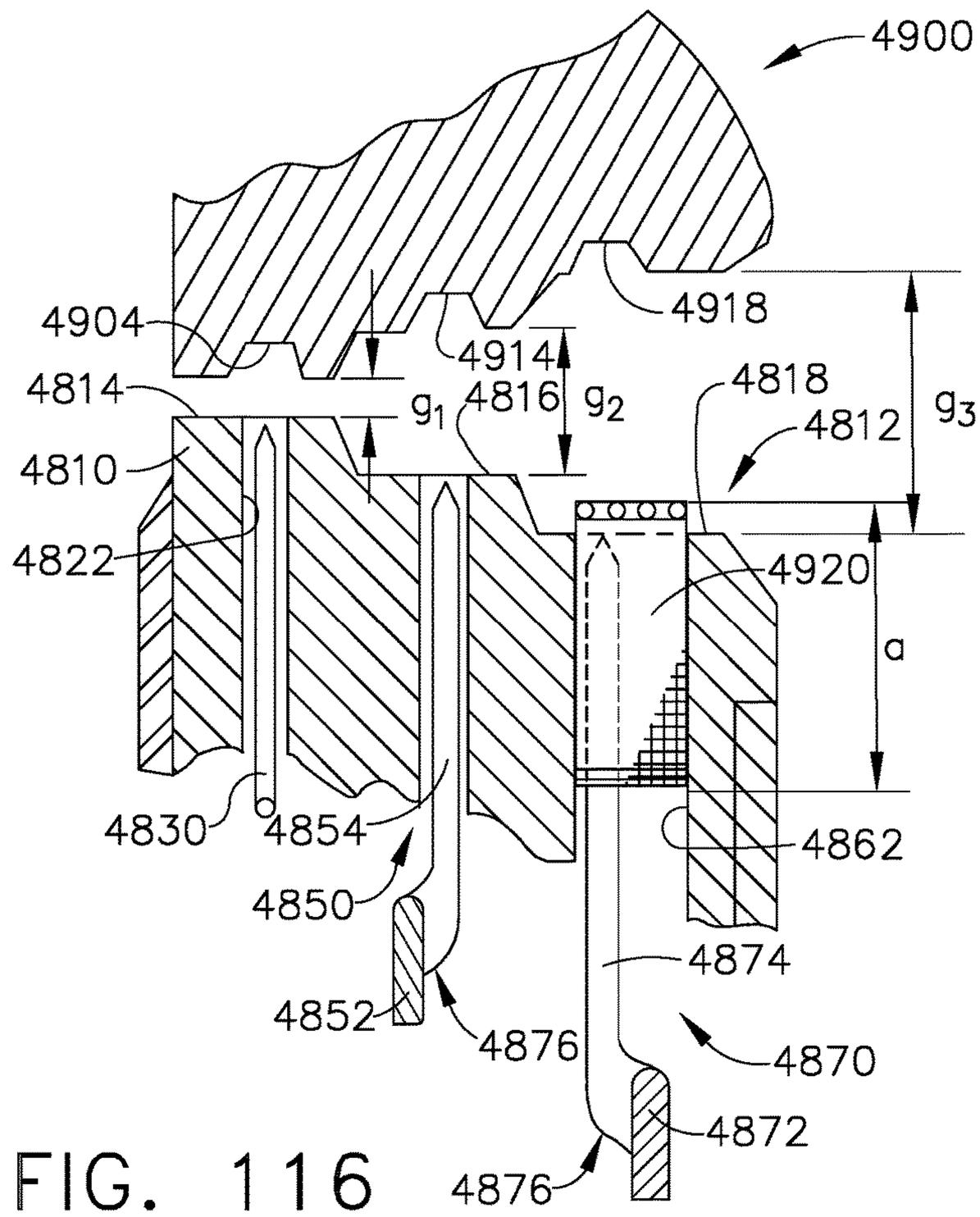

FIG. 116

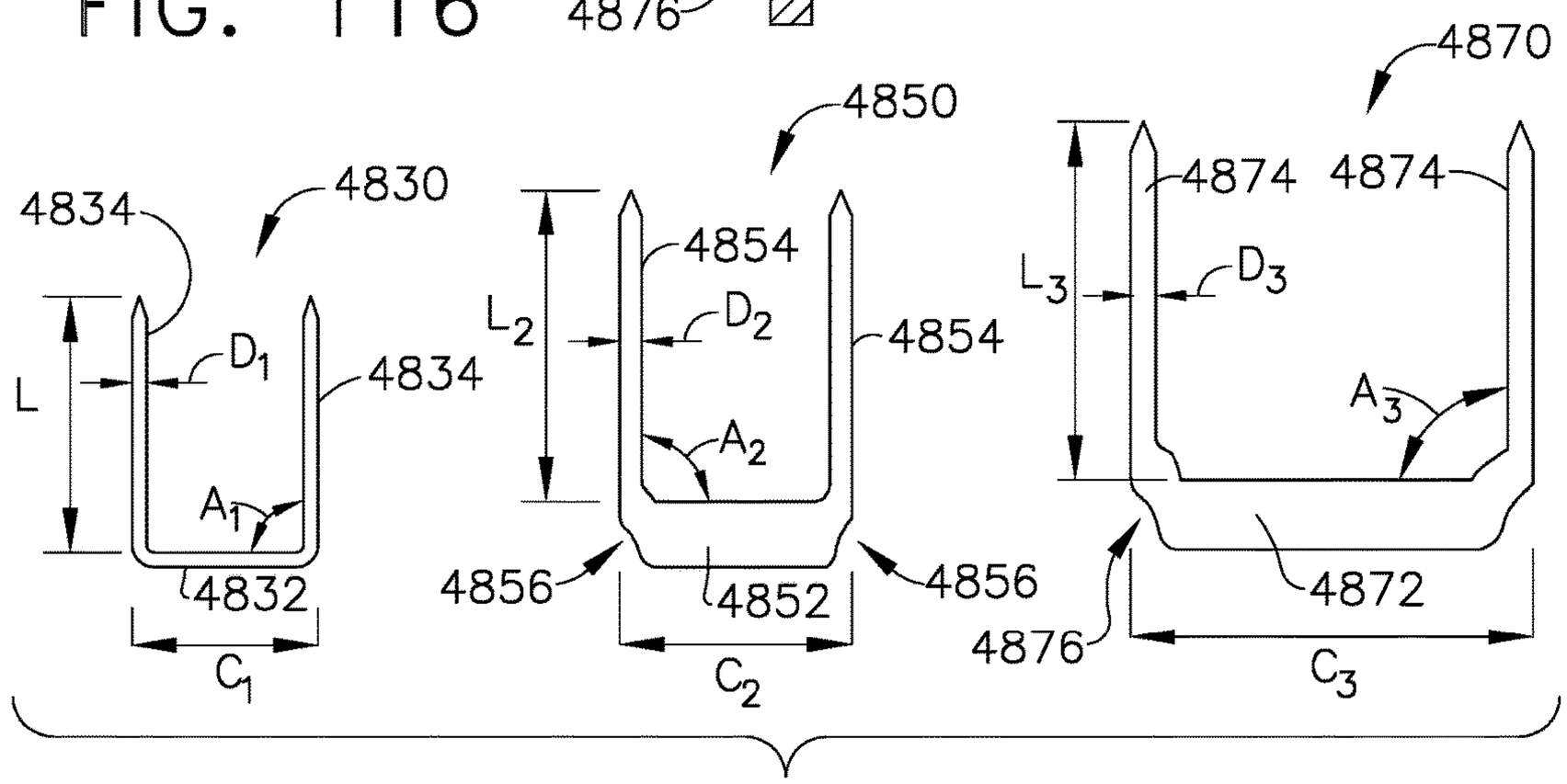

FIG. 117

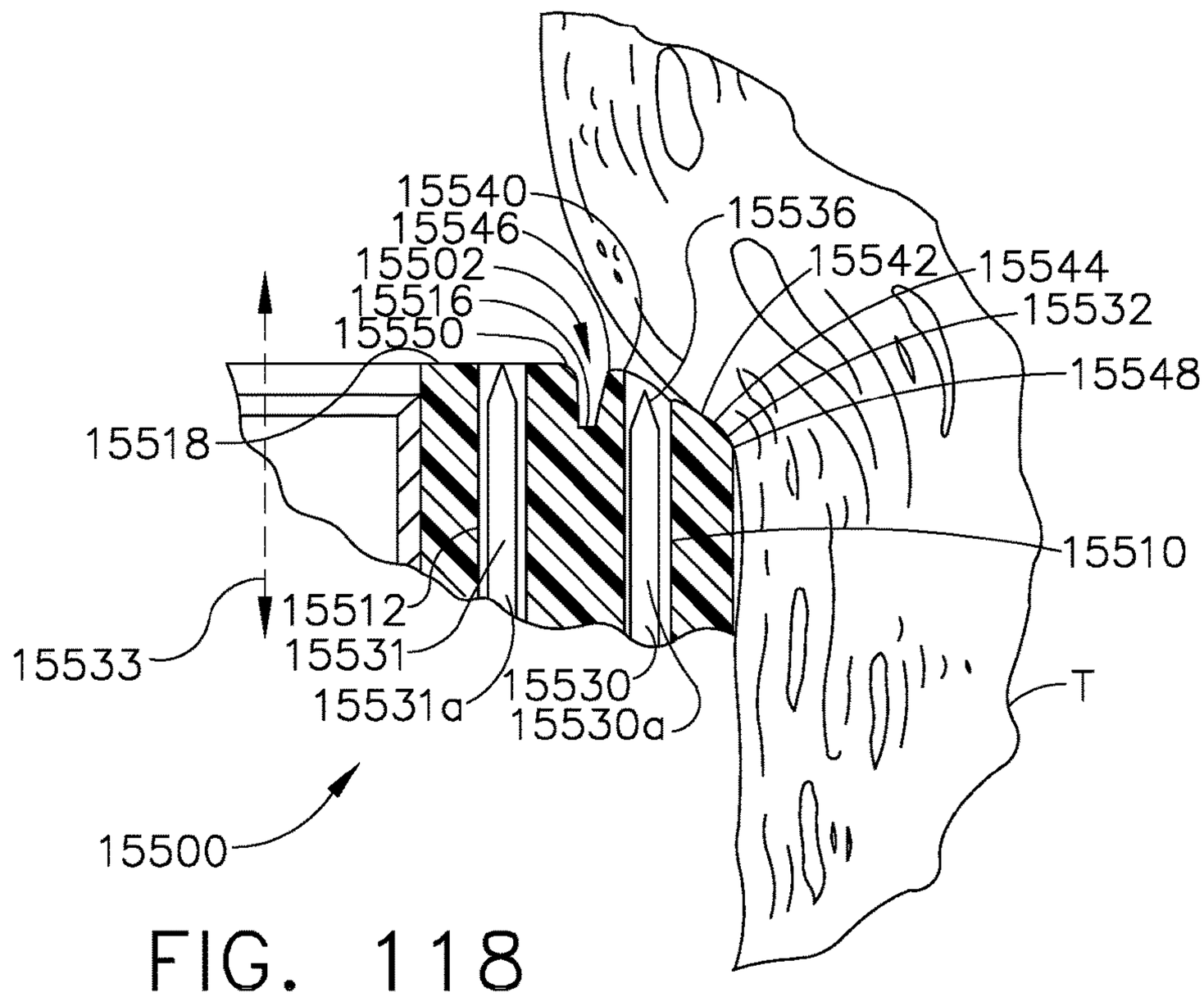

FIG. 118

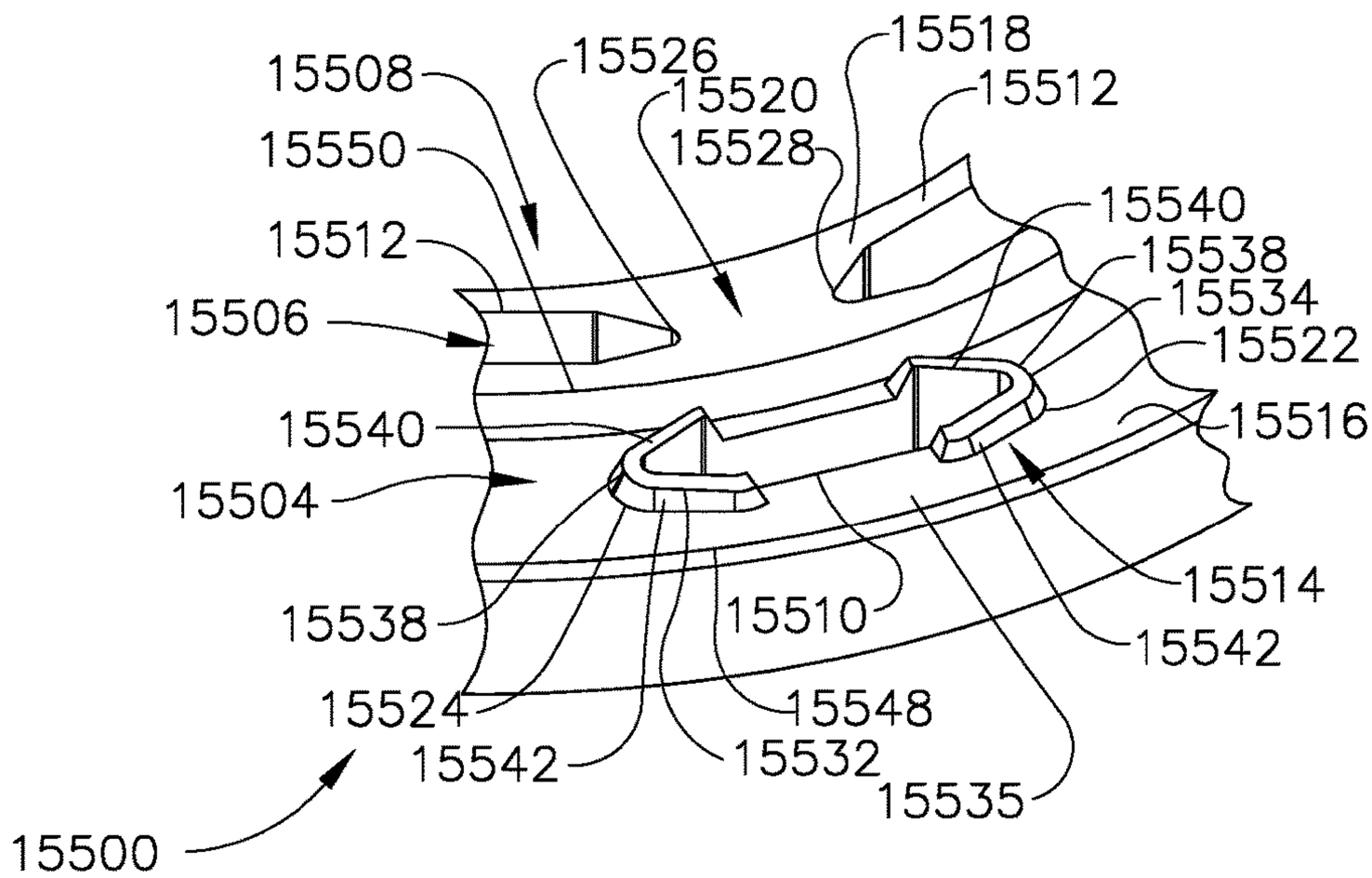

FIG. 119

MODULAR SURGICAL STAPLING SYSTEM COMPRISING A DISPLAY

BACKGROUND

The present invention relates to surgical instruments and, in various arrangements, to surgical stapling and cutting instruments and staple cartridges for use therewith that are designed to staple and cut tissue.

BRIEF DESCRIPTION OF THE DRAWINGS

Various features of the embodiments described herein, together with advantages thereof, may be understood in accordance with the following description taken in conjunction with the accompanying drawings as follows:

FIG. **1** is a perspective view of a surgical instrument including an interchangeable surgical tool assembly in accordance with at least one embodiment;

FIG. **2** is another perspective view of a handle assembly of the surgical instrument of FIG. **1**, with a portion of the handle housing omitted to expose components housed therein;

FIG. **3** is an exploded assembly view of portions of the handle assembly of the surgical instrument of FIGS. **1** and **2**;

FIG. **4** is a cross-sectional perspective view of the handle assembly of FIGS. **2** and **3**;

FIG. **5** is a partial cross-sectional side view of the handle assembly of FIGS. **2-4** with a grip portion of the handle assembly shown in solid lines in one position relative to a primary housing portion and in phantom lines in another position relative to the primary housing portion of the handle assembly;

FIG. **6** is an end cross-sectional view of the handle assembly of FIGS. **2-5** taken along line **6-6** in FIG. **5**;

FIG. **7** is another end cross-sectional view of the handle assembly of FIGS. **2-6** taken along line **7-7** in FIG. **5**;

FIG. **8** is another end cross-sectional view of the handle assembly of FIGS. **2-7** showing a shifter gear in meshing engagement with a drive gear on a rotary drive socket;

FIG. **9** is another end cross-sectional view of the handle assembly of FIGS. **2-8** showing the position of a shifter solenoid when the shifter gear is in meshing engagement with the drive gear on the rotary drive socket;

FIG. **10** is another perspective view of the handle assembly of FIGS. **2-9** with certain portions thereof shown in cross-section and with an access panel portion thereof shown in phantom;

FIG. **11** is a top view of the handle assembly of FIGS. **2-11** with a bailout system shown in an actuatable position;

FIG. **12** is a perspective view of a bailout handle of the bailout system depicted in FIGS. **2-11**;

FIG. **13** is an exploded assembly view of portions of the bailout handle of FIG. **12** with portions thereof shown in cross-section;

FIG. **14** is a cross-sectional elevation view of the handle assembly of FIG. **11**;

FIG. **15** illustrates an exploded view of an interchangeable tool assembly in accordance with at least one embodiment;

FIG. **16** is a perspective view of the interchangeable tool assembly of FIG. **15**;

FIG. **17** is a cross-sectional perspective view of the interchangeable tool assembly of FIG. **15**;

FIG. **18** is a cross-sectional exploded view of the interchangeable tool assembly of FIG. **15**;

FIG. **19** is a perspective view of an articulation block of the interchangeable tool assembly of FIG. **15**;

FIG. **20** is a cross-sectional perspective view of an articulation joint of the interchangeable tool assembly of FIG. **15** including the articulation block of FIG. **19**;

FIG. **21** is another cross-sectional perspective view of the articulation joint of FIG. **20**;

FIG. **22** is a partial exploded view of the interchangeable tool assembly of FIG. **15**;

FIG. **23** is another partial exploded view of the interchangeable tool assembly of FIG. **15**;

FIG. **24** is a partial exploded view of the articulation joint of FIG. **20**;

FIG. **25** is a cross-sectional perspective view of the proximal end of the interchangeable tool assembly of FIG. **15**;

FIG. **26** is an end view of the interchangeable tool assembly of FIG. **15**;

FIG. **27** is a cross-sectional view of an end effector of the interchangeable tool assembly of FIG. **15** taken along line **27-27** in FIG. **26** illustrating the end effector in a clamped, but unfired condition;

FIG. **28** is a cross-sectional view of an end effector of the interchangeable tool assembly of FIG. **15** taken along line **28-28** in FIG. **26** illustrating the end effector in a clamped, but unfired condition;

FIG. **29** is a cross-sectional view of the end effector of the interchangeable tool assembly of FIG. **15** taken along line **29-29** in FIG. **26** illustrating the end effector in a clamped, but unfired condition;

FIG. **30** is a cross-sectional view of the end effector of the interchangeable tool assembly of FIG. **15** illustrated in a disassembled condition;

FIG. **31** illustrates the end effector of the interchangeable tool assembly of FIG. **15** articulated in a first direction;

FIG. **32** illustrates the end effector of the interchangeable tool assembly of FIG. **15** articulated in a second direction;

FIG. **33** is a perspective view of a cartridge body of the interchangeable tool assembly of FIG. **15**;

FIG. **34** is a perspective view of a cartridge body in accordance with at least one alternative embodiment;

FIG. **35** is an exploded view of an end effector of an interchangeable tool assembly in accordance with at least one alternative embodiment;

FIG. **36** is a disassembled view of the end effector of FIG. **35**;

FIG. **37** is a disassembled view of an end effector of an interchangeable tool assembly in accordance with at least one alternative embodiment;

FIG. **38** is a disassembled view of an end effector of an interchangeable tool assembly in accordance with at least one alternative embodiment;

FIG. **39** is a perspective view illustrating a staple cartridge and a shaft of a surgical stapling instrument in accordance with at least one embodiment;

FIG. **40** is a partial cross-sectional view of the staple cartridge assembled to the stapling instrument of FIG. **39**;

FIG. **41** is a partial cross-sectional view of a surgical stapling instrument comprising a closure drive, an anvil, and a lockout configured to prevent the anvil from being assembled to the closure drive if the closure drive is not in a fully-extended position;

FIG. **42** is a partial cross-sectional view of the surgical stapling instrument of FIG. **41** illustrating the anvil attached to the closure drive;

FIG. **43** is a partial perspective view of a surgical stapling instrument comprising a staple cartridge and a closure drive configured to move an anvil relative to the staple cartridge;

FIG. **44** is a partial cross-sectional view of the stapling instrument of FIG. **43** illustrating a lockout configured to prevent the closure drive from being retracted without the anvil being attached to the closure drive;

FIG. **45** is a partial cross-sectional view of the stapling instrument of FIG. **44** illustrating the anvil attached to the closure drive and the lockout disengaged from the closure drive;

FIG. **46** is a partial cross-sectional view of a surgical stapling instrument comprising a staple cartridge including staples removable stored therein, an anvil, a closure drive configured to move the anvil relative to the staple cartridge, and a firing drive configured to eject the staples from the staple cartridge;

FIG. **47** is a detail view of a lockout configured to prevent the firing drive from being actuated prior to the anvil being moved into a closed position;

FIG. **48** is a detail view of the lockout of FIG. **47** disengaged from the firing drive;

FIG. **49** is a partial perspective view of a surgical stapling instrument comprising a staple cartridge including staples removable stored therein, an anvil, a closure drive configured to move the anvil relative to the staple cartridge, and a firing drive configured to eject the staples from the staple cartridge;

FIG. **50** is a detail view of a lockout of the surgical stapling instrument of FIG. **49** configured to prevent the firing drive from being actuated prior to the anvil applying a sufficient pressure to tissue captured between the anvil and the staple cartridge;

FIG. **51** is a detail view of the lockout of FIG. **50** disengaged from the firing drive;

FIG. **52** is a partial perspective view of a surgical stapling instrument comprising a staple cartridge including staples removable stored therein, an anvil, a closure drive configured to move the anvil relative to the staple cartridge, and a firing drive configured to eject the staples from the staple cartridge;

FIG. **53** is a detail view of a lockout of the surgical stapling instrument of FIG. **52** configured to prevent the anvil from being detached from the closure drive while a cutting member of the firing drive is exposed above the staple cartridge;

FIG. **54** is a detail view of the lockout of FIG. **53** disengaged from the anvil after the firing drive has been sufficiently retracted after a firing stroke;

FIG. **55** is a partial cross-sectional view of a surgical stapling instrument comprising a staple cartridge including staples removable stored therein, an anvil, a closure drive configured to move the anvil relative to the staple cartridge, and a firing drive configured to eject the staples from the staple cartridge;

FIG. **56** is a partial cross-sectional view of the surgical stapling instrument of FIG. **55** illustrating the closure drive in a clamped configuration and the firing drive in an unfired configuration, wherein the firing drive is holding a lockout in an unreleased configuration;

FIG. **57** is a partial cross-sectional view of the surgical stapling instrument of FIG. **55** illustrating the firing drive in an at least partially-fired configuration and the lockout of FIG. **56** in a released configuration;

FIG. **58** is a partial cross-sectional view of the surgical stapling instrument of FIG. **55** illustrating the closure drive in an extended, or open, configuration and the lockout of FIG. **56** engaged with the closure drive to prevent the closure drive from being re-clamped;

FIG. **59** is a cross-sectional view of a surgical stapling instrument comprising a staple cartridge including staples removable stored therein, an anvil, a closure drive configured to move the anvil relative to the staple cartridge, and a firing drive configured to eject the staples from the staple cartridge which is illustrated in a disabled, or locked out, configuration;

FIG. **59**A is a cross-sectional end view of the surgical stapling instrument of FIG. **59** taken along line **59**A-**59**A in FIG. **59**;

FIG. **60** is a cross-sectional view of the surgical stapling instrument of FIG. **59** illustrated in a clamped configuration in which the firing drive has been enabled;

FIG. **60**A is a cross-sectional end view of the surgical stapling instrument of FIG. **59** taken along line **60**A-**60**A in FIG. **60**;

FIG. **61** is a partial cross-sectional view of a surgical stapling instrument comprising a staple cartridge including staples removable stored therein, an anvil, a closure drive configured to move the anvil relative to the staple cartridge, and a firing drive configured to eject the staples from the staple cartridge, wherein the closure drive is illustrated in an unclamped configuration and the firing drive is illustrated in an inoperable configuration;

FIG. **62** is a partial cross-sectional view of the surgical stapling instrument of FIG. **61** with the closure drive illustrated in a clamped configuration and the firing drive is illustrated in an operable configuration;

FIG. **63** is a perspective view of a rotatable intermediate drive member of the firing drive of the surgical instrument of FIG. **61**;

FIG. **64** is a partial perspective view of a rotatable firing shaft of the firing drive of the surgical instrument of FIG. **61**;

FIG. **65** is an elevational view of a spring system configured to bias the firing shaft of FIG. **64** out of engagement with the intermediate drive member of FIG. **63**;

FIG. **66** is an exploded view of an end effector of a surgical stapling instrument comprising a staple cartridge in accordance with at least one embodiment;

FIG. **67** is a partial cross-sectional view of the end effector of FIG. **66** illustrating a lockout configured to prevent the end effector from being operated if the staple cartridge is not fully assembled to the stapling instrument;

FIG. **68** is a partial cross-sectional view of the end effector of FIG. **66** illustrating the lockout in an unlocked configuration;

FIG. **69** is an exploded view of an end effector of a surgical stapling instrument comprising a staple cartridge in accordance with at least one embodiment;

FIG. **70** is a partial cross-sectional view of the end effector of FIG. **69** illustrating a lock configured to releasably hold the staple cartridge to the stapling instrument;

FIG. **71** is a partial cross-sectional view of the end effector of FIG. **69** illustrating the lock in an unlocked configuration;

FIG. **72** illustrates a shaft of a surgical stapling instrument configured to be used with a staple cartridge selected from a plurality of circular staple cartridges;

FIG. **73** is a cross-sectional view of a distal end of the stapling instrument of FIG. **72**;

FIG. **74** is a partial cross-sectional view of a surgical stapling instrument comprising an unfired staple cartridge and a lockout system configured to prevent the staple cartridge from being re-fired after it has been previously fired by a firing drive of the surgical instrument;

FIG. **75** is a partial cross-sectional view of the stapling instrument of FIG. **74** illustrated in a clamped configuration and the firing drive in a fired configuration;

FIG. **76** is a partial cross-sectional view of the stapling instrument of FIG. **74** illustrated in an unclamped configuration and the firing drive in a retracted configuration;

FIG. **77** is an end view of the firing drive and a frame of the stapling instrument of FIG. **74** illustrating the firing drive in an unfired configuration;

FIG. **78** is an end view of the firing drive and the frame of the stapling instrument of FIG. **74** illustrating the firing drive in a retracted configuration;

FIG. **79** is an end view of an alternative staple cartridge design that is usable with the stapling instrument of FIG. **74**;

FIG. **80** is an end view of an alternative staple cartridge design that is usable with the stapling instrument of FIG. **74**;

FIG. **81** is a perspective view of a surgical stapling instrument comprising a flexible shaft in accordance with at least one embodiment;

FIG. **82** is a schematic of a surgical instrument kit comprising a plurality of end effectors in accordance with at least one embodiment;

FIG. **82**A is a schematic of a robotic surgical instrument system comprising a plurality of attachable end effectors in accordance with at least one embodiment;

FIG. **83** is a perspective view of several end effectors depicted in FIG. **82**;

FIG. **84** is a perspective view of an anvil in accordance with at least one embodiment;

FIG. **85** is a cross-sectional view of the anvil of FIG. **84**;

FIG. **86** is a partial cross-sectional view of an end effector including the anvil of FIG. **84** illustrated in a fired configuration;

FIG. **87** is a perspective view of an anvil in accordance with at least one embodiment;

FIG. **88** is a plan view of the anvil of FIG. **87**;

FIG. **89** is a cross-sectional view of an end effector in accordance with at least one embodiment illustrated in a clamped, unfired configuration;

FIG. **90** is a cross-sectional view of the end effector of FIG. **89** illustrated in a fired configuration;

FIG. **91** is a cross-sectional view of an end effector in accordance with at least one alternative embodiment illustrated in a clamped, unfired configuration;

FIG. **92** is a cross-sectional view of the end effector of FIG. **91** illustrated in a fired configuration;

FIG. **93** is a cross-sectional view of an end effector in accordance with at least one alternative embodiment illustrated in a clamped, unfired configuration;

FIG. **94** is a cross-sectional view of the end effector of FIG. **91** illustrated in a fired configuration;

FIG. **95** is a perspective view of a staple forming pocket in accordance with at least one embodiment;

FIG. **96** is a cross-sectional view of the staple forming pocket of FIG. **95**;

FIG. **97** is an exploded view of an end effector in accordance with at least one embodiment configured to sequentially deploy a first annular row of staples and a second annular row of staples;

FIG. **98** is a partial cross-sectional view of the end effector of FIG. **97** illustrating a firing driver deploying a staple in the first row of staples;

FIG. **99** is a partial cross-sectional view of the end effector of FIG. **97** illustrating the firing driver of FIG. **98** deploying a staple in the second row of staples;

FIG. **100** is a partial perspective view of a firing drive configured to sequentially drive a first driver for firing a first row of staples, a second driver for firing a second row of staples, and then a third driver for driving a cutting member;

FIG. **101** is a partial perspective view of the firing drive of FIG. **100** illustrating the first driver in a fired position;

FIG. **102** is a partial perspective view of the firing drive of FIG. **100** illustrating the second driver in a fired position;

FIG. **103** is a partial perspective view of the firing drive of FIG. **100** illustrating the third driver in a fired position;

FIG. **104** is an exploded view of the firing drive of FIG. **100**;

FIG. **105** is a partial perspective view of the firing drive of FIG. **100** in the configuration of FIG. **103**;

FIG. **106** is an exploded view of a firing drive in accordance with at least one alternative embodiment;

FIG. **107** is a perspective view of a portion of a surgical staple cartridge for use with a circular surgical stapling instrument in accordance with at least one embodiment;

FIG. **108** depicts a pair of staples in accordance with at least one embodiment in unformed and formed configurations;

FIG. **109** is a cross-sectional view of a portion of an anvil in relation to a portion of the surgical staple cartridge of FIG. **107** prior to actuation of the staple forming process;

FIG. **110** is another cross-sectional view of the anvil of FIG. **109** and the staple cartridge of FIG. **107** after the staples have been formed;

FIG. **111** is a perspective view of a portion of a surgical staple cartridge for use with a circular surgical stapling instrument in accordance with at least one embodiment;

FIG. **112** is a cross-sectional view of a portion of an anvil in relation to a portion of the surgical staple cartridge of FIG. **111** prior to actuation of the staple forming process;

FIG. **113** is another cross-sectional view of the anvil and staple cartridge of FIG. **112** after the staples have been formed;

FIG. **114** is a top view of a staple cartridge in accordance with at least one embodiment;

FIG. **115** is a bottom view of an anvil in accordance with at least one embodiment;

FIG. **116** is a cross-sectional view of a portion of an anvil in relation to a portion of a surgical staple cartridge;

FIG. **117** depicts three unformed surgical staples;

FIG. **118** illustrates a partial cross-sectional view of a staple cartridge of a circular stapler in accordance with at least one embodiment; and

FIG. **119** illustrates a partial perspective view of a staple cartridge of a circular stapler in accordance with at least one embodiment.

Corresponding reference characters indicate corresponding parts throughout the several views. The exemplifications set out herein illustrate various embodiments of the invention, in one form, and such exemplifications are not to be construed as limiting the scope of the invention in any manner.

DETAILED DESCRIPTION

Applicant of the present application owns the following patent applications that were filed on Apr. 1, 2016 and which are each herein incorporated by reference in their respective entireties:

- U.S. patent application Ser. No. 15/089,325,entitled METHOD FOR OPERATING A SURGICAL STAPLING SYSTEM, now U.S. Patent Application Publication No. 2017/0281171;
- U.S. patent application Ser. No. 15/089,326, entitled SURGICAL STAPLING SYSTEM COMPRISING A

DISPLAY INCLUDING A RE-ORIENTABLE DISPLAY FIELD, now U.S. Patent Application Publication No. 2017/281172;

U.S. patent application Ser. No. 15/089,263, entitled SURGICAL INSTRUMENT HANDLE ASSEMBLY WITH RECONFIGURABLE GRIP PORTION, now U.S. Patent Application Publication No. 2017/0281165;

U.S. patent application Ser. No. 15/089,262, entitled ROTARY POWERED SURGICAL INSTRUMENT WITH MANUALLY ACTUATABLE BAILOUT SYSTEM, now U.S. Patent Application Publication No. 2017/0281161;

U.S. patent application Ser. No. 15/089,277, entitled SURGICAL CUTTING AND STAPLING END EFFECTOR WITH ANVIL CONCENTRIC DRIVE MEMBER, now U.S. Patent Application Publication No. 2017/0281166;

U.S. patent application Ser. No. 15/089,283, entitled CLOSURE SYSTEM ARRANGEMENTS FOR SURGICAL CUTTING AND STAPLING DEVICES WITH SEPARATE AND DISTINCT FIRING SHAFTS, now U.S. Patent Application Publication No. 2017/0281167;

U.S. patent application Ser. No. 15/089,296, entitled INTERCHANGEABLE SURGICAL TOOL ASSEMBLY WITH A SURGICAL END EFFECTOR THAT IS SELECTIVELY ROTATABLE ABOUT A SHAFT AXIS, now U.S. Patent Application Publication No. 2017/0281168;

U.S. patent application Ser. No. 15/089,258, entitled SURGICAL STAPLING SYSTEM COMPRISING A SHIFTABLE TRANSMISSION, now U.S. Patent Application Publication No. 2017/0281178;

U.S. patent application Ser. No. 15/089,278, entitled SURGICAL STAPLING SYSTEM CONFIGURED TO PROVIDE SELECTIVE CUTTING OF TISSUE, now U.S. Patent Application Publication No. 2017/0281162;

U.S. patent application Ser. No. 15/089,284, entitled SURGICAL STAPLING SYSTEM COMPRISING A CONTOURABLE SHAFT, now U.S. Patent Application Publication No. 2017/0281186;

U.S. patent application Ser. No. 15/089,295, entitled SURGICAL STAPLING SYSTEM COMPRISING A TISSUE COMPRESSION LOCKOUT, now U.S. Patent Application Publication No. 2017/0281187;

U.S. patent application Ser. No. 15/089,300, entitled SURGICAL STAPLING SYSTEM COMPRISING AN UNCLAMPING LOCKOUT, now U.S. Patent Application Publication No. 2017/0281179;

U.S. patent application Ser. No. 15/089,196, entitled SURGICAL STAPLING SYSTEM COMPRISING A JAW CLOSURE LOCKOUT, now U.S. Patent Application Publication No. 2017/0281183;

U.S. patent application Ser. No. 15/089,203, entitled SURGICAL STAPLING SYSTEM COMPRISING A JAW ATTACHMENT LOCKOUT, now U.S. Patent Application Publication No. 2017/0281184;

U.S. patent application Ser. No. 15/089,210, entitled SURGICAL STAPLING SYSTEM COMPRISING A SPENT CARTRIDGE LOCKOUT, now U.S. Patent Application Publication No. 2017/0281185;

U.S. patent application Ser. No. 15/089,324, entitled SURGICAL INSTRUMENT COMPRISING A SHIFTING MECHANISM, now U.S. Patent Application Publication No. 2017/0281170;

U.S. patent application Ser. No. 15/089,335, entitled SURGICAL STAPLING INSTRUMENT COMPRISING MULTIPLE LOCKOUTS, now U.S. Patent Application Publication No. 2017/0281155;

U.S. patent application Ser. No. 15/089,339, entitled SURGICAL STAPLING INSTRUMENT, now U.S. Patent Application Publication No. 2017/0281173;

U.S. patent application Ser. No. 15/089,253, entitled SURGICAL STAPLING SYSTEM CONFIGURED TO APPLY ANNULAR ROWS OF STAPLES HAVING DIFFERENT HEIGHTS, now U.S. Patent Application Publication No. 2017/0281177;

U.S. patent application Ser. No. 15/089,304, entitled SURGICAL STAPLING SYSTEM COMPRISING A GROOVED FORMING POCKET, now U.S. Patent Application Publication No. 2017/0281188;

U.S. patent application Ser. No. 15/089,331, entitled ANVIL MODIFICATION MEMBERS FOR SURGICAL STAPLERS, now U.S. Patent Application Publication No. 2017/0281180;

U.S. patent application Ser. No. 15/089,336, entitled STAPLE CARTRIDGES WITH ATRAUMATIC FEATURES, now U.S. Patent Application Publication No. 2017/0281164;

U.S. patent application Ser. No. 15/089,312, entitled CIRCULAR STAPLING SYSTEM COMPRISING AN INCISABLE TISSUE SUPPORT, now U.S. Patent Application Publication No. 2017/0281189;

U.S. patent application Ser. No. 15/089,309, entitled CIRCULAR STAPLING SYSTEM COMPRISING ROTARY FIRING SYSTEM, now U.S. Patent Application Publication No. 2017/0281169; and

U.S. patent application Ser. No. 15/089,349, entitled CIRCULAR STAPLING SYSTEM COMPRISING LOAD CONTROL, now U.S. Patent Application Publication No. 2017/0281174.

The Applicant of the present application also owns the U.S. Patent Applications identified below which were filed on Dec. 31, 2015 which are each herein incorporated by reference in their respective entirety:

U.S. patent application Ser. No. 14/984,488, entitled MECHANISMS FOR COMPENSATING FOR BATTERY PACK FAILURE IN POWERED SURGICAL INSTRUMENTS;

U.S. patent application Ser. No. No. 14/984,525, entitled MECHANISMS FOR COMPENSATING FOR DRIVETRAIN FAILURE IN POWERED SURGICAL INSTRUMENTS; and

U.S. patent application Ser. No. 14/984,552, entitled SURGICAL INSTRUMENTS WITH SEPARABLE MOTORS AND MOTOR CONTROL CIRCUITS.

The Applicant of the present application also owns the U.S. patent applications identified below which were filed on Feb. 9, 2016 which are each herein incorporated by reference in their respective entirety:

U.S. patent application Ser. No. 15/019,220, entitled SURGICAL INSTRUMENT WITH ARTICULATING AND AXIALLY TRANSLATABLE END EFFECTOR;

U.S. patent application Ser. No. 15/019,228, entitled SURGICAL INSTRUMENTS WITH MULTIPLE LINK ARTICULATION ARRANGEMENTS;

U.S. patent application Ser. No. 15/019,196, entitled SURGICAL INSTRUMENT ARTICULATION MECHANISM WITH SLOTTED SECONDARY CONSTRAINT;

U.S. patent application Ser. No. 15/019,206, entitled SURGICAL INSTRUMENTS WITH AN END EFFECTOR THAT IS HIGHLY ARTICULATABLE RELATIVE TO AN ELONGATE SHAFT ASSEMBLY;

U.S. patent application Ser. No. 15/019,215, entitled SURGICAL INSTRUMENTS WITH NON-SYMMETRICAL ARTICULATION ARRANGEMENTS;

U.S. patent application Ser. No. 15/019,227, entitled ARTICULATABLE SURGICAL INSTRUMENTS WITH SINGLE ARTICULATION LINK ARRANGEMENTS;

U.S. patent application Ser. No. 15/019,235, entitled SURGICAL INSTRUMENTS WITH TENSIONING ARRANGEMENTS FOR CABLE DRIVEN ARTICULATION SYSTEMS;

U.S. patent application Ser. No. 15/019,230, entitled ARTICULATABLE SURGICAL INSTRUMENTS WITH OFF-AXIS FIRING BEAM ARRANGEMENTS; and

U.S. patent application Ser. No. 15/019,245, entitled SURGICAL INSTRUMENTS WITH CLOSURE STROKE REDUCTION ARRANGEMENTS.

The Applicant of the present application also owns the U.S. patent applications identified below which were filed on Feb. 12, 2016 which are each herein incorporated by reference in their respective entirety:

U.S. patent application Ser. No. 15/043,254, entitled MECHANISMS FOR COMPENSATING FOR DRIVETRAIN FAILURE IN POWERED SURGICAL INSTRUMENTS;

U.S. patent application Ser. No. 15/043,259, entitled MECHANISMS FOR COMPENSATING FOR DRIVETRAIN FAILURE IN POWERED SURGICAL INSTRUMENTS;

U.S. patent application Ser. No. 15/043,275, entitled MECHANISMS FOR COMPENSATING FOR DRIVETRAIN FAILURE IN POWERED SURGICAL INSTRUMENTS; and

U.S. patent application Ser. No. 15/043,289, entitled MECHANISMS FOR COMPENSATING FOR DRIVETRAIN FAILURE IN POWERED SURGICAL INSTRUMENTS.

Applicant of the present application owns the following patent applications that were filed on Jun. 18, 2015 and which are each herein incorporated by reference in their respective entireties:

U.S. patent application Ser. No. 14/742,925, entitled SURGICAL END EFFECTORS WITH POSITIVE JAW OPENING ARRANGEMENTS;

U.S. patent application Ser. No. 14/742,941, entitled SURGICAL END EFFECTORS WITH DUAL CAM ACTUATED JAW CLOSING FEATURES;

U.S. patent application Ser. No. 14/742,914, entitled MOVABLE FIRING BEAM SUPPORT ARRANGEMENTS FOR ARTICULATABLE SURGICAL INSTRUMENTS;

U.S. patent application Ser. No. 14/742,900, entitled ARTICULATABLE SURGICAL INSTRUMENTS WITH COMPOSITE FIRING BEAM STRUCTURES WITH CENTER FIRING SUPPORT MEMBER FOR ARTICULATION SUPPORT;

U.S. patent application Ser. No. 14/742,885, entitled DUAL ARTICULATION DRIVE SYSTEM ARRANGEMENTS FOR ARTICULATABLE SURGICAL INSTRUMENTS; and

U.S. patent application Ser. No. 14/742,876, entitled PUSH/PULL ARTICULATION DRIVE SYSTEMS FOR ARTICULATABLE SURGICAL INSTRUMENTS.

Applicant of the present application owns the following patent applications that were filed on Mar. 6, 2015 and which are each herein incorporated by reference in their respective entireties:

U.S. patent application Ser. No. 14/640,746, entitled POWERED SURGICAL INSTRUMENT;

U.S. patent application Ser. No. 14/640,795, entitled MULTIPLE LEVEL THRESHOLDS TO MODIFY OPERATION OF POWERED SURGICAL INSTRUMENTS;

U.S. patent application Ser. No. 14/640,832, entitled ADAPTIVE TISSUE COMPRESSION TECHNIQUES TO ADJUST CLOSURE RATES FOR MULTIPLE TISSUE TYPES;

U.S. patent application Ser. No. 14/640,935, entitled OVERLAID MULTI SENSOR RADIO FREQUENCY (RF) ELECTRODE SYSTEM TO MEASURE TISSUE COMPRESSION;

U.S. patent application Ser. No. 14/640,831, entitled MONITORING SPEED CONTROL AND PRECISION INCREMENTING OF MOTOR FOR POWERED SURGICAL INSTRUMENTS;

U.S. patent application Ser. No. 14/640,859, entitled TIME DEPENDENT EVALUATION OF SENSOR DATA TO DETERMINE STABILITY, CREEP, AND VISCOELASTIC ELEMENTS OF MEASURES;

U.S. patent application Ser. No. 14/640,817, entitled INTERACTIVE FEEDBACK SYSTEM FOR POWERED SURGICAL INSTRUMENTS;

U.S. patent application Ser. No. 14/640,844, entitled CONTROL TECHNIQUES AND SUB-PROCESSOR CONTAINED WITHIN MODULAR SHAFT WITH SELECT CONTROL PROCESSING FROM HANDLE;

U.S. patent application Ser. No. 14/640,837, entitled SMART SENSORS WITH LOCAL SIGNAL PROCESSING;

U.S. patent application Ser. No. 14/640,765, entitled SYSTEM FOR DETECTING THE MIS-INSERTION OF A STAPLE CARTRIDGE INTO A SURGICAL STAPLER;

U.S. patent application Ser. No. 14/640,799, entitled SIGNAL AND POWER COMMUNICATION SYSTEM POSITIONED ON A ROTATABLE SHAFT; and

U.S. patent application Ser. No. 14/640,780, entitled SURGICAL INSTRUMENT COMPRISING A LOCKABLE BATTERY HOUSING.

Applicant of the present application owns the following patent applications that were filed on Feb. 27, 2015, and which are each herein incorporated by reference in their respective entireties:

U.S. patent application Ser. No. 14/633,576, entitled SURGICAL INSTRUMENT SYSTEM COMPRISING AN INSPECTION STATION;

U.S. patent application Ser. No. 14/633,546, entitled SURGICAL APPARATUS CONFIGURED TO ASSESS WHETHER A PERFORMANCE PARAMETER OF THE SURGICAL APPARATUS IS WITHIN AN ACCEPTABLE PERFORMANCE BAND;

U.S. patent application Ser. No. 14/633,576, entitled SURGICAL CHARGING SYSTEM THAT CHARGES AND/OR CONDITIONS ONE OR MORE BATTERIES;

U.S. patent application Ser. No. 14/633,566, entitled CHARGING SYSTEM THAT ENABLES EMERGENCY RESOLUTIONS FOR CHARGING A BATTERY;

U.S. patent application Ser. No. 14/633,555, entitled SYSTEM FOR MONITORING WHETHER A SURGICAL INSTRUMENT NEEDS TO BE SERVICED;

U.S. patent application Ser. No. 14/633,542, entitled REINFORCED BATTERY FOR A SURGICAL INSTRUMENT;

U.S. patent application Ser. No. 14/633,548, entitled POWER ADAPTER FOR A SURGICAL INSTRUMENT;

U.S. patent application Ser. No. 14/633,526, entitled ADAPTABLE SURGICAL INSTRUMENT HANDLE;

U.S. patent application Ser. No. 14/633,541, entitled MODULAR STAPLING ASSEMBLY; and

U.S. patent application Ser. No. 14/633,562, entitled SURGICAL APPARATUS CONFIGURED TO TRACK AN END-OF-LIFE PARAMETER.

Applicant of the present application owns the following patent applications that were filed on Dec. 18, 2014 and which are each herein incorporated by reference in their respective entireties:

U.S. patent application Ser. No. 14/574,478, entitled SURGICAL INSTRUMENT SYSTEMS COMPRISING AN ARTICULATABLE END EFFECTOR AND MEANS FOR ADJUSTING THE FIRING STROKE OF A FIRING;

U.S. patent application Ser. No. 14/574,483, entitled SURGICAL INSTRUMENT ASSEMBLY COMPRISING LOCKABLE SYSTEMS;

U.S. patent application Ser. No. 14/575,139, entitled DRIVE ARRANGEMENTS FOR ARTICULATABLE SURGICAL INSTRUMENTS;

U.S. patent application Ser. No. 14/575,148, entitled LOCKING ARRANGEMENTS FOR DETACHABLE SHAFT ASSEMBLIES WITH ARTICULATABLE SURGICAL END EFFECTORS;

U.S. patent application Ser. No. 14/575,130, entitled SURGICAL INSTRUMENT WITH AN ANVIL THAT IS SELECTIVELY MOVABLE ABOUT A DISCRETE NON-MOVABLE AXIS RELATIVE TO A STAPLE CARTRIDGE;

U.S. patent application Ser. No. 14/575,143, entitled SURGICAL INSTRUMENTS WITH IMPROVED CLOSURE ARRANGEMENTS;

U.S. patent application Ser. No. 14/575,117, entitled SURGICAL INSTRUMENTS WITH ARTICULATABLE END EFFECTORS AND MOVABLE FIRING BEAM SUPPORT ARRANGEMENTS;

U.S. patent application Ser. No. 14/575,154, entitled SURGICAL INSTRUMENTS WITH ARTICULATABLE END EFFECTORS AND IMPROVED FIRING BEAM SUPPORT ARRANGEMENTS;

U.S. patent application Ser. No. 14/574,493, entitled SURGICAL INSTRUMENT ASSEMBLY COMPRISING A FLEXIBLE ARTICULATION SYSTEM; and

U.S. patent application Ser. No. 14/574,500, entitled SURGICAL INSTRUMENT ASSEMBLY COMPRISING A LOCKABLE ARTICULATION SYSTEM.

Applicant of the present application owns the following patent applications that were filed on Mar. 1, 2013 and which are each herein incorporated by reference in their respective entireties:

U.S. patent application Ser. No. 13/782,295, entitled ARTICULATABLE SURGICAL INSTRUMENTS WITH CONDUCTIVE PATHWAYS FOR SIGNAL COMMUNICATION, now U.S. Patent Application Publication No. 2014/0246471;

U.S. patent application Ser. No. 13/782,323, entitled ROTARY POWERED ARTICULATION JOINTS FOR SURGICAL INSTRUMENTS, now U.S. Patent Application Publication No. 2014/0246472;

U.S. patent application Ser. No. 13/782,338, entitled THUMBWHEEL SWITCH ARRANGEMENTS FOR SURGICAL INSTRUMENTS, now U.S. Patent Application Publication No. 2014/0249557;

U.S. patent application Ser. No. 13/782,499, entitled ELECTROMECHANICAL SURGICAL DEVICE WITH SIGNAL RELAY ARRANGEMENT, now U.S. Patent Application Publication No. 2014/0246474;

U.S. patent application Ser. No. 13/782,460, entitled MULTIPLE PROCESSOR MOTOR CONTROL FOR MODULAR SURGICAL INSTRUMENTS, now U.S. Patent Application Publication No. 2014/0246478;

U.S. patent application Ser. No. 13/782,358, entitled JOYSTICK SWITCH ASSEMBLIES FOR SURGICAL INSTRUMENTS, now U.S. Patent Application Publication No. 2014/0246477;

U.S. patent application Ser. No. 13/782,481, entitled SENSOR STRAIGHTENED END EFFECTOR DURING REMOVAL THROUGH TROCAR, now U.S. Patent Application Publication No. 2014/0246479;

U.S. patent application Ser. No. 13/782,518, entitled CONTROL METHODS FOR SURGICAL INSTRUMENTS WITH REMOVABLE IMPLEMENT PORTIONS, now U.S. Patent Application Publication No. 2014/0246475;

U.S. patent application Ser. No. 13/782,375, entitled ROTARY POWERED SURGICAL INSTRUMENTS WITH MULTIPLE DEGREES OF FREEDOM, now U.S. Patent Application Publication No. 2014/0246473; and

U.S. patent application Ser. No. 13/782,536, entitled SURGICAL INSTRUMENT SOFT STOP, now U.S. Patent Application Publication No. 2014/0246476.

Applicant of the present application also owns the following patent applications that were filed on Mar. 14, 2013 and which are each herein incorporated by reference in their respective entireties:

U.S. patent application Ser. No. 13/803,097, entitled ARTICULATABLE SURGICAL INSTRUMENT COMPRISING A FIRING DRIVE, now U.S. Patent Application Publication No. 2014/0263542;

U.S. patent application Ser. No. 13/803,193, entitled CONTROL ARRANGEMENTS FOR A DRIVE MEMBER OF A SURGICAL INSTRUMENT, now U.S. Patent Application Publication No. 2014/0263537;

U.S. patent application Ser. No. 13/803,053, entitled INTERCHANGEABLE SHAFT ASSEMBLIES FOR USE WITH A SURGICAL INSTRUMENT, now U.S. Patent Application Publication No. 2014/0263564;

U.S. patent application Ser. No. 13/803,086, entitled ARTICULATABLE SURGICAL INSTRUMENT COMPRISING AN ARTICULATION LOCK, now U.S. Patent Application Publication No. 2014/0263541;

U.S. patent application Ser. No. 13/803,210, entitled SENSOR ARRANGEMENTS FOR ABSOLUTE

POSITIONING SYSTEM FOR SURGICAL INSTRUMENTS, now U.S. Patent Application Publication No. 2014/0263538;

U.S. patent application Ser. No. 13/803,148, entitled MULTI-FUNCTION MOTOR FOR A SURGICAL INSTRUMENT, now U.S. Patent Application Publication No. 2014/0263554;

U.S. patent application Ser. No. 13/803,066, entitled DRIVE SYS TEM LOCKOUT ARRANGEMENTS FOR MODULAR SURGICAL INSTRUMENTS, now U.S. Patent Application Publication No. 2014/0263565;

U.S. patent application Ser. No. 13/803,117, entitled ARTICULATION CONTROL SYSTEM FOR ARTICULATABLE SURGICAL INSTRUMENTS, now U.S. Patent Application Publication No. 2014/0263553;

U.S. patent application Ser. No. 13/803,130, entitled DRIVE TRAIN CONTROL ARRANGEMENTS FOR MODULAR SURGICAL INSTRUMENTS, now U.S. Patent Application Publication No. 2014/0263543; and

U.S. patent application Ser. No. 13/803,159, entitled METHOD AND SYSTEM FOR OPERATING A SURGICAL INSTRUMENT, now U.S. Patent Application Publication No. 2014/0277017.

Applicant of the present application also owns the following patent application that was filed on Mar. 7, 2014 and is herein incorporated by reference in its entirety:

U.S. patent application Ser. No. 14/200,111, entitled CONTROL SYSTEMS FOR SURGICAL INSTRUMENTS, now U.S. Patent Application Publication No. 2014/0263539.

Applicant of the present application also owns the following patent applications that were filed on Mar. 26, 2014 and are each herein incorporated by reference in their respective entireties:

U.S. patent application Ser. No. 14/226,106, entitled POWER MANAGEMENT CONTROL SYSTEMS FOR SURGICAL INSTRUMENTS, now U.S. Patent Application Publication No. 2015/0272582;

U.S. patent application Ser. No. 14/226,099, entitled STERILIZATION VERIFICATION CIRCUIT, now U.S. Patent Application Publication No. 2015/0272581;

U.S. patent application Ser. No. 14/226,094, entitled VERIFICATION OF NUMBER OF BATTERY EXCHANGES/PROCEDURE COUNT, now U.S. Patent Application Publication No. 2015/0272580;

U.S. patent application Ser. No. 14/226,117, entitled POWER MANAGEMENT THROUGH SLEEP OPTIONS OF SEGMENTED CIRCUIT AND WAKE UP CONTROL, now U.S. Patent Application Publication No. 2015/0272574;

U.S. patent application Ser. No. 14/226,075, entitled MODULAR POWERED SURGICAL INSTRUMENT WITH DETACHABLE SHAFT ASSEMBLIES, now U.S. Patent Application Publication No. 2015/0272579;

U.S. patent application Ser. No. 14/226,093, entitled FEEDBACK ALGORITHMS FOR MANUAL BAILOUT SYSTEMS FOR SURGICAL INSTRUMENTS, now U.S. Patent Application Publication No. 2015/0272569;

U.S. patent application Ser. No. 14/226,116, entitled SURGICAL INSTRUMENT UTILIZING SENSOR ADAPTATION, now U.S. Patent Application Publication No. 2015/0272571;

U.S. patent application Ser. No. 14/226,071, entitled SURGICAL INSTRUMENT CONTROL CIRCUIT HAVING A SAFETY PROCESSOR, now U.S. Patent Application Publication No. 2015/0272578;

U.S. patent application Ser. No. 14/226,097, entitled SURGICAL INSTRUMENT COMPRISING INTERACTIVE SYSTEMS, now U.S. Patent Application Publication No. 2015/0272570;

U.S. patent application Ser. No. 14/226,126, entitled INTERFACE SYSTEMS FOR USE WITH SURGICAL INSTRUMENTS, now U.S. Patent Application Publication No. 2015/0272572;

U.S. patent application Ser. No. 14/226,133, entitled MODULAR SURGICAL INSTRUMENT SYSTEM, now U.S. Patent Application Publication No. 2015/0272557;

U.S. patent application Ser. No. 14/226,081, entitled SYSTEMS AND METHODS FOR CONTROLLING A SEGMENTED CIRCUIT, now U.S. Patent Application Publication No. 2015/0277471;

U.S. patent application Ser. No. 14/226,076, entitled POWER MANAGEMENT THROUGH SEGMENTED CIRCUIT AND VARIABLE VOLTAGE PROTECTION, now U.S. Patent Application Publication No. 2015/0280424;

U.S. patent application Ser. No. 14/226,111, entitled SURGICAL STAPLING INSTRUMENT SYSTEM, now U.S. Patent Application Publication No. 2015/0272583; and

U.S. patent application Ser. No. 14/226,125, entitled SURGICAL INSTRUMENT COMPRISING A ROTATABLE SHAFT, now U.S. Patent Application Publication No. 2015/0280384.

Applicant of the present application also owns the following patent applications that were filed on Sep. 5, 2014 and which are each herein incorporated by reference in their respective entireties:

U.S. patent application Ser. No. 14/479,103, entitled CIRCUITRY AND SENSORS FOR POWERED MEDICAL DEVICE, now U.S. Patent Application Publication No. 2016/0066912;

U.S. patent application Ser. No. 14/479,119, entitled ADJUNCT WITH INTEGRATED SENSORS TO QUANTIFY TISSUE COMPRESSION, now U.S. Patent Application Publication No. 2016/0066914;

U.S. patent application Ser. No. 14/478,908, entitled MONITORING DEVICE DEGRADATION BASED ON COMPONENT EVALUATION, now U.S. Patent Application Publication No. 2016/0066910;

U.S. patent application Ser. No. 14/478,895, entitled MULTIPLE SENSORS WITH ONE SENSOR AFFECTING A SECOND SENSOR'S OUTPUT OR INTERPRETATION, now U.S. Patent Application Publication No. 2016/0066909;

U.S. patent application Ser. No. 14/479,110, entitled USE OF POLARITY OF HALL MAGNET DETECTION TO DETECT MISLOADED CARTRIDGE, now U.S. Patent Application Publication No. 2016/0066915;

U.S. patent application Ser. No. 14/479,098, entitled SMART CARTRIDGE WAKE UP OPERATION AND DATA RETENTION, now U.S. Patent Application Publication No. 2016/0066911;

U.S. patent application Ser. No. 14/479,115, entitled MULTIPLE MOTOR CONTROL FOR POWERED MEDICAL DEVICE, now U.S. Patent Application Publication No. 2016/0066916; and

U.S. patent application Ser. No. 14/479,108, entitled LOCAL DISPLAY OF TISSUE PARAMETER STABILIZATION, now U.S. Patent Application Publication No. 2016/0066913.

Applicant of the present application also owns the following patent applications that were filed on Apr. 9, 2014 and which are each herein incorporated by reference in their respective entireties:

- U.S. patent application Ser. No. 14/248,590, entitled MOTOR DRIVEN SURGICAL INSTRUMENTS WITH LOCKABLE DUAL DRIVE SHAFTS, now U.S. Patent Application Publication No. 2014/0305987;
- U.S. patent application Ser. No. 14/248,581, entitled SURGICAL INSTRUMENT COMPRISING A CLOSING DRIVE AND A FIRING DRIVE OPERATED FROM THE SAME ROTATABLE OUTPUT, now U.S. Patent Application Publication No. 2014/0305989;
- U.S. patent application Ser. No. 14/248,595, entitled SURGICAL INSTRUMENT SHAFT INCLUDING SWITCHES FOR CONTROLLING THE OPERATION OF THE SURGICAL INSTRUMENT, now U.S. Patent Application Publication No. 2014/0305988;
- U.S. patent application Ser. No. 14/248,588, entitled POWERED LINEAR SURGICAL STAPLER, now U.S. Patent Application Publication No. 2014/0309666;
- U.S. patent application Ser. No. 14/248,591, entitled TRANSMISSION ARRANGEMENT FOR A SURGICAL INSTRUMENT, now U.S. Patent Application Publication No. 2014/0305991;
- U.S. patent application Ser. No. 14/248,584, entitled MODULAR MOTOR DRIVEN SURGICAL INSTRUMENTS WITH ALIGNMENT FEATURES FOR ALIGNING ROTARY DRIVE SHAFTS WITH SURGICAL END EFFECTOR SHAFTS, now U.S. Patent Application Publication No. 2014/0305994;
- U.S. patent application Ser. No. 14/248,587, entitled POWERED SURGICAL STAPLER, now U.S. Patent Application Publication No. 2014/0309665;
- U.S. patent application Ser. No. 14/248,586, entitled DRIVE SYSTEM DECOUPLING ARRANGEMENT FOR A SURGICAL INSTRUMENT, now U.S. Patent Application Publication No. 2014/0305990; and
- U.S. patent application Ser. No. 14/248,607, entitled MODULAR MOTOR DRIVEN SURGICAL INSTRUMENTS WITH STATUS INDICATION ARRANGEMENTS, now U.S. Patent Application Publication No. 2014/0305992.

Applicant of the present application also owns the following patent applications that were filed on Apr. 16, 2013 and which are each herein incorporated by reference in their respective entireties:

- U.S. Provisional Patent Application Ser. No. 61/812,365, entitled SURGICAL INSTRUMENT WITH MULTIPLE FUNCTIONS PERFORMED BY A SINGLE MOTOR;
- U.S. Provisional Patent Application Ser. No. 61/812,376, entitled LINEAR CUTTER WITH POWER;
- U.S. Provisional patent application Ser. No. 61/812,382, entitled LINEAR CUTTER WITH MOTOR AND PISTOL GRIP;
- U.S. Provisional Patent Application Ser. No. 61/812,385, entitled SURGICAL INSTRUMENT HANDLE WITH MULTIPLE ACTUATION MOTORS AND MOTOR CONTROL; and
- U.S. Provisional Patent Application Ser. No. 61/812,372, entitled SURGICAL INSTRUMENT WITH MULTIPLE FUNCTIONS PERFORMED BY A SINGLE MOTOR.

Numerous specific details are set forth to provide a thorough understanding of the overall structure, function, manufacture, and use of the embodiments as described in the specification and illustrated in the accompanying drawings. Well-known operations, components, and elements have not been described in detail so as not to obscure the embodiments described in the specification. The reader will understand that the embodiments described and illustrated herein are non-limiting examples, and thus it can be appreciated that the specific structural and functional details disclosed herein may be representative and illustrative. Variations and changes thereto may be made without departing from the scope of the claims.

The terms "comprise" (and any form of comprise, such as "comprises" and "comprising"), "have" (and any form of have, such as "has" and "having"), "include" (and any form of include, such as "includes" and "including") and "contain" (and any form of contain, such as "contains" and "containing") are open-ended linking verbs. As a result, a surgical system, device, or apparatus that "comprises," "has," "includes" or "contains" one or more elements possesses those one or more elements, but is not limited to possessing only those one or more elements. Likewise, an element of a system, device, or apparatus that "comprises," "has," "includes" or "contains" one or more features possesses those one or more features, but is not limited to possessing only those one or more features.

The terms "proximal" and "distal" are used herein with reference to a clinician manipulating the handle portion of the surgical instrument. The term "proximal" refers to the portion closest to the clinician and the term "distal" refers to the portion located away from the clinician. It will be further appreciated that, for convenience and clarity, spatial terms such as "vertical", "horizontal", "up", and "down" may be used herein with respect to the drawings. However, surgical instruments are used in many orientations and positions, and these terms are not intended to be limiting and/or absolute.

Various exemplary devices and methods are provided for performing laparoscopic and minimally invasive surgical procedures. However, the reader will readily appreciate that the various methods and devices disclosed herein can be used in numerous surgical procedures and applications including, for example, in connection with open surgical procedures. As the present Detailed Description proceeds, the reader will further appreciate that the various instruments disclosed herein can be inserted into a body in any way, such as through a natural orifice, through an incision or puncture hole formed in tissue, etc. The working portions or end effector portions of the instruments can be inserted directly into a patient's body or can be inserted through an access device that has a working channel through which the end effector and elongate shaft of a surgical instrument can be advanced.

A surgical stapling system can comprise a shaft and an end effector extending from the shaft. The end effector comprises a first jaw and a second jaw. The first jaw comprises a staple cartridge. The staple cartridge is insertable into and removable from the first jaw; however, other embodiments are envisioned in which a staple cartridge is not removable from, or at least readily replaceable from, the first jaw. The second jaw comprises an anvil configured to deform staples ejected from the staple cartridge. The second jaw is pivotable relative to the first jaw about a closure axis;

however, other embodiments are envisioned in which first jaw is pivotable relative to the second jaw. The surgical stapling system further comprises an articulation joint configured to permit the end effector to be rotated, or articulated, relative to the shaft. The end effector is rotatable about an articulation axis extending through the articulation joint. Other embodiments are envisioned which do not include an articulation joint.

The staple cartridge comprises a cartridge body. The cartridge body includes a proximal end, a distal end, and a deck extending between the proximal end and the distal end. In use, the staple cartridge is positioned on a first side of the tissue to be stapled and the anvil is positioned on a second side of the tissue. The anvil is moved toward the staple cartridge to compress and clamp the tissue against the deck. Thereafter, staples removably stored in the cartridge body can be deployed into the tissue. The cartridge body includes staple cavities defined therein wherein staples are removably stored in the staple cavities. The staple cavities are arranged in six longitudinal rows. Three rows of staple cavities are positioned on a first side of a longitudinal slot and three rows of staple cavities are positioned on a second side of the longitudinal slot. Other arrangements of staple cavities and staples may be possible.

The staples are supported by staple drivers in the cartridge body. The drivers are movable between a first, or unfired position, and a second, or fired, position to eject the staples from the staple cavities. The drivers are retained in the cartridge body by a retainer which extends around the bottom of the cartridge body and includes resilient members configured to grip the cartridge body and hold the retainer to the cartridge body. The drivers are movable between their unfired positions and their fired positions by a sled. The sled is movable between a proximal position adjacent the proximal end and a distal position adjacent the distal end. The sled comprises a plurality of ramped surfaces configured to slide under the drivers and lift the drivers, and the staples supported thereon, toward the anvil.

Further to the above, the sled is moved distally by a firing member. The firing member is configured to contact the sled and push the sled toward the distal end. The longitudinal slot defined in the cartridge body is configured to receive the firing member. The anvil also includes a slot configured to receive the firing member. The firing member further comprises a first cam which engages the first jaw and a second cam which engages the second jaw. As the firing member is advanced distally, the first cam and the second cam can control the distance, or tissue gap, between the deck of the staple cartridge and the anvil. The firing member also comprises a knife configured to incise the tissue captured intermediate the staple cartridge and the anvil. It is desirable for the knife to be positioned at least partially proximal to the ramped surfaces such that the staples are ejected ahead of the knife.

FIG. **1** depicts a motor-driven surgical system **10** that may be used to perform a variety of different surgical procedures. In the illustrated embodiment, the motor driven surgical system **10** comprises a selectively reconfigurable housing or handle assembly **20** that is attached to one form of an interchangeable surgical tool assembly **1000**. For example, the system **10** that is depicted in FIG. **1** includes an interchangeable surgical tool assembly **1000** that comprises a surgical cutting and fastening instrument which may be referred to as an endocutter. As will be discussed in further detail below, the interchangeable surgical tool assemblies may include end effectors that are adapted to support different sizes and types of staple cartridges and, have different shaft lengths, sizes, and types, etc. Such arrangements, for example, may utilize any suitable fastener, or fasteners, to fasten tissue. For instance, a fastener cartridge comprising a plurality of fasteners removably stored therein can be removably inserted into and/or attached to the end effector of a surgical tool assembly. Other surgical tool assemblies may be interchangeably employed with the handle assembly **20**. For example, the interchangeable surgical tool assembly **1000** may be detached from the handle assembly **20** and replaced with a different surgical tool assembly that is configured to perform other surgical procedures. In other arrangements, the surgical tool assembly may not be interchangeable with other surgical tool assemblies and essentially comprise a dedicated shaft that is non-removably affixed or coupled to the handle assembly **20**, for example. The surgical tool assemblies may also be referred to as elongate shaft assemblies. The surgical tool assemblies may be reusable or, in other configurations, the surgical tool assemblies may be designed to be disposed of after a single use.

As the present Detailed Description proceeds, it will be understood that the various forms of interchangeable surgical tool assemblies disclosed herein may also be effectively employed in connection with robotically-controlled surgical systems. Thus, the terms "housing" and "housing assembly" may also encompass a housing or similar portion of a robotic system that houses or otherwise operably supports at least one drive system that is configured to generate and apply at least one control motion which could be used to actuate the elongate shaft assemblies disclosed herein and their respective equivalents. The term "frame" may refer to a portion of a handheld surgical instrument. The term "frame" may also represent a portion of a robotically controlled surgical instrument and/or a portion of the robotic system that may be used to operably control a surgical instrument. For example, the surgical tool assemblies disclosed herein may be employed with various robotic systems, instruments, components and methods such as, but not limited to, those disclosed in U.S. patent application Ser. No. 13/118,241, entitled SURGICAL STAPLING INSTRUMENTS WITH ROTATABLE STAPLE DEPLOYMENT ARRANGEMENTS, now U.S. Patent Application Publication No. 2012/0298719 which is hereby incorporated by reference herein in its entirety.

Referring now to FIGS. **1** and **2**, the housing assembly or handle assembly **20** comprises a primary housing portion **30** that may be formed from a pair of housing segments **40**, **70** that may be fabricated from plastic, polymer materials, metal, etc. and be joined together by an appropriate fastener arrangement such as, for example, adhesive, screws, press-fit features, snap-fit features, latches, etc. As will be discussed in further detail below, the primary housing portion **30** operably supports a plurality of drive systems therein that are configured to generate and apply various control motions to corresponding portions of the interchangeable surgical tool assembly that is operably attached thereto. The handle assembly **20** further comprises a grip portion **100** that is movably coupled to the primary housing portion **30** and is configured to be gripped and manipulated by the clinician in various positions relative to the primary housing portion **30**. The grip portion **100** may be fabricated from a pair of grip segments **110**, **120** that may be fabricated from plastic, polymer materials, metal, etc. and are joined together by an appropriate fastener arrangement such as, for example, adhesive, screws, press-fit features, snap-fit features, latches, etc. for assembly and maintenance purposes.

As can be seen in FIG. **2**, the grip portion **100** comprises a grip housing **130** that defines a hollow cavity **132** that is configured to operably support a drive motor and gearbox which will be discussed in further detail below. The upper portion **134** of the grip housing **130** is configured to extend through an opening **80** in the primary housing portion **30** and be pivotally journaled on a pivot shaft **180**. The pivot shaft **180** defines a pivot axis designated as "PA". See FIG. **3**. For reference purposes, the handle assembly **20** defines a handle axis designated as "HA" that may be parallel to the shaft axis "SA" of the elongate shaft assembly of the interchangeable surgical tool that is operably attached to the handle assembly **20**. The pivot axis PA is transverse to the handle axis HA. See FIG. **1**. Such arrangement enables the grip portion **100** to be pivoted relative to the primary housing portion **30** about the pivot axis PA to a position that is best suited for the type of interchangeable surgical tool assembly that is coupled to the handle assembly **20**. The grip housing **130** defines a grip axis, generally designated as "GA". See FIG. **2**. When the interchangeable surgical tool assembly that is coupled to the handle assembly **20** comprises an endocutter for example, the clinician might want to position the grip portion **100** relative to the primary housing portion **30** such that the grip axis GA is perpendicular or approximately perpendicular (angle "H**1**") to the handle axis HA (referred to herein as a "first grip position"). See FIG. **5**. However, if the handle assembly **20** is being used to control an interchangeable surgical tool assembly that comprises a circular stapler for example, the clinician may wish to pivot the grip portion **100** relative to the primary housing portion **30** to a position wherein the grip axis GA is at a forty-five degree or approximately forty-five degree angle or other suitable acute angle (angle "H**2**") relative to the handle axis HA. This position is referred to herein as a "second grip position". FIG. **5** illustrates the grip portion **100** in phantom lines in the second grip position.

Referring now to FIGS. **3-5**, the handle assembly **20** also includes a grip locking system, generally designated as **150**, for selectively locking the grip portion **100** in the desired orientation relative to the primary housing portion **30**. In one arrangement, the grip locking system **150** comprises an arcuate series **152** of pointed teeth **154**. The teeth **154** are spaced from each other and form a locking groove **156** therebetween. Each locking groove **156** corresponds to a particular angular locking position for the grip portion **100**. For example, in at least one arrangement, the teeth **154** and locking grooves or "locking locations" **156** are arranged to permit the grip portion **100** to be locked at 10-15 degree intervals between the first grip position and the second grip position. The arrangement may employ two stop positions which are tailored to the type of instrument (shaft arrangement) employed. For example, for an endocutter shaft arrangement, it may be approximately around ninety degrees to the shaft and for a circular stapler arrangement, the angle may be approximately forty-five degrees to the shaft while being swept forward towards the surgeon. The grip locking system **150** further includes a locking button **160** that has a locking portion that is configured to lockingly engage the locking grooves **156**. For example, the locking button **160** is pivotally mounted in the primary handle portion **30** on a pivot pin **131** to permit the locking button **160** to pivot into engagement with a corresponding locking groove **156**. A locking spring **164** serves to bias the locking button **160** into an engaged or locked position with the corresponding locking groove **156**. The locking portion and the teeth configurations serve to enable the teeth **154** to slide past the locking portion when the clinician depresses the locking button **160**. Thus, to adjust the angular position of the grip portion **100** relative to the primary housing portion **30**, the clinician depresses the locking button **160** and then pivots the grip portion **100** to the desired angular position. Once the grip portion **100** has been moved to the desired position, the clinician releases the locking button **160**. The locking spring **164** will then bias the locking button **160** toward the series of teeth **154** so that the locking portion enters the corresponding locking groove **156** to retain the grip portion **100** in that position during use.

The handle assembly **20** operably supports a first rotary drive system **300**, a second rotary drive system **320** and a third axial drive system **400**. The rotary drive systems **300**, **320** are each powered by a motor **200** that is operably supported in the grip portion **100**. As can be seen in FIG. **2**, for example, the motor **200** is supported within the cavity **132** in the grip portion **100** and has a gear box assembly **202** that has an output drive shaft **204** protruding therefrom. In various forms, the motor **200** may be a DC brushed driving motor having a maximum rotation of, approximately, 25,000 RPM, for example. In other arrangements, the motor may include a brushless motor, a cordless motor, a synchronous motor, a stepper motor, or any other suitable electric motor. The motor **200** may be powered by a power source **210** that, in one form, may comprise a removable power pack **212**. The power source **210** may comprise, for example, anyone of the various power source arrangements disclosed in further detail in U.S. Patent Application Publication No. 2015/0272575 and entitled SURGICAL INSTRUMENT COMPRISING A SENSOR SYSTEM, the entire disclosure of which is hereby incorporated by reference herein. In the illustrated arrangement, for example, the power pack **212** may comprise a proximal housing portion **214** that is configured for attachment to a distal housing portion **216**. The proximal housing portion **214** and the distal housing portion **216** are configured to operably support a plurality of batteries **218** therein. Batteries **218** may each comprise, for example, a Lithium Ion ("LI") or other suitable battery. The distal housing portion **216** is configured for removable operable attachment to a handle circuit board assembly **220** which is also operably coupled to the motor **200**. The handle circuit board assembly **220** may also be generally referred to herein as the "control system or CPU **224**". A number of batteries **218** may be connected in series may be used as the power source for the handle assembly **20**. In addition, the power source **210** may be replaceable and/or rechargeable. In other embodiments, the surgical instrument **10** may be powered by alternating current (AC) for example. The motor **200** may be controlled by a rocker switch **206** that is mounted to the grip portion **100**.

As outlined above, the motor **200** is operably coupled to a gear box assembly **202** that includes an output drive shaft **204**. Attached to the output drive shaft **204** is a driver bevel gear **230**. The motor **200**, the gear box assembly **202**, the output drive shaft **204** and the driver bevel gear **230** may also be collectively referred to herein as a "motor assembly **231**". The driver bevel gear **230** interfaces with a driven bevel gear **234** that is attached to a system drive shaft **232** as well as a pivot bevel gear **238** that is journaled on the pivot shaft **180**. The driven bevel gear **234** is axially movable on the system drive shaft **232** between an engaged position wherein the driven bevel gear **234** is in meshing engagement with the driver bevel gear **230** (FIG. **5**) and a disengaged position wherein the driven bevel gear **234** is out of meshing engagement with the drive bevel gear **230** (FIG. **14**). A drive system spring **235** is journaled between the driven bevel gear **234** and a proximal end flange **236** that is

formed on a proximal portion of the system drive shaft **232**. See FIGS. **4** and **14**. The drive system spring **235** serves to bias the driven bevel gear **234** out of meshing engagement with the driver bevel gear **230** as will be discussed in further detail below. The pivot bevel gear **238** facilitates pivotal travel of the output drive shaft **204** and driver bevel gear **230** with the grip portion **100** relative to the primary handle portion **30**.

In the illustrated example, the system drive shaft **232** interfaces with a rotary drive selector system, generally designated as **240**. In at least one form, for example, the rotary drive selector system **240** comprises a shifter gear **250** that is selectively movable between the first rotary drive system **300** and the second rotary drive system **320**. As can be seen in FIGS. **6-9**, for example, the drive selector system **240** comprises a shifter mounting plate **242** that is non-movably mounted within primary handle portion **30**. For example, the shifter mounting plate **242** may be frictionally retained between mounting lugs (not shown) formed in the housing segments **40**, **70** or be otherwise retained therein by screws, adhesive, etc. Still referring to FIGS. **6-9**, the system drive shaft **232** extends through a hole in the shifter mounting plate **242** and has the central, or system, drive gear **237** non-rotatably attached thereto. For example the central drive gear **237** may be attached to the system drive shaft **232** by a keyway arrangement **233**. See FIGS. **6-9**. In other arrangements, the system drive shaft **232** may be rotatably supported in the shifter mounting plate **242** by a corresponding bearing (not shown) that is mounted thereto. In any event, rotation of the system drive shaft **232** will result in rotation of the central drive gear **234**.

As can be seen in FIG. **3**, the first drive system **300** includes a first drive socket **302** that is rotatably supported in a distal wall **32** formed in the primary handle portion **30**. The first drive socket **302** may comprise a first body portion **304** that has a splined socket formed therein. A first driven gear **306** is formed on or is non-movably attached to the first body portion **304**. The first body portion **304** may be rotatably supported in a corresponding hole or passage provided the distal wall **32** or it may be rotatably supported in a corresponding bearing (not shown) that is mounted in the distal wall **32**. Similarly, the second rotary drive system **320** includes a second drive socket **322** that is also rotatably supported in the distal wall **32** of the primary handle portion **30**. The second drive socket **322** may comprise a second body portion **324** that has a splined socket formed therein. A second driven gear **326** is formed on or is non-rotatably mounted to the second body portion **324**. The second body portion **324** may be rotatably supported in a corresponding hole or passage provided the distal wall **32** or it may be rotatably supported in a corresponding bearing (not shown) that is mounted in the distal wall **32**. The first and second drive sockets **302**, **322** are spaced from each other on each lateral side of the handle axis HA. See FIG. **4**, for example.

As indicated above, in the illustrated example, the rotary drive selector system **240** includes a shifter gear **250**. As can be seen in FIGS. **6-9**, the shifter gear **250** is rotatably mounted on an idler shaft **252** that is movably supported in an arcuate slot **244** in the shifter mounting plate **242**. The shifter gear **250** is mounted so as to freely rotate on the idler shaft **252** and remain in meshing engagement with the central drive gear **234**. The idler shaft **252** is coupled to an end of a shaft **262** of a shifter solenoid **260**. The shifter solenoid **260** is pinned or otherwise mounted with the primary handle housing **30** such that when the shifter solenoid **260** is actuated, the shifter gear **250** is moved into meshing engagement with one of the first driven gear **306** or the second driven gear **326**. For example, in one arrangement, when the solenoid shaft is **262** is retracted (FIGS. **6** and **7**), the shifter gear **250** is in meshing engagement with the central drive gear **234** and the first driven gear **306** such that actuation of the motor **200** will result in rotation of the first drive socket **302**. As can be seen in FIGS. **6** and **7**, a shifter spring **266** may be employed to bias the shifter gear **250** into that first actuation position. Thus, should power be lost to the surgical instrument **10**, the shifter spring **266** will automatically bias the shifter gear **250** into the first position. When the shifter gear **250** is in that position, subsequent actuation of the motor **200** will result in rotation of the first drive socket **302** of the first rotary drive system **300**. When the shifter solenoid is actuated, the shifter gear **250** is moved into meshing engagement with the second driven gear **326** on the second drive socket **322**. Thereafter, actuation of the motor **200** will result in actuation or rotation of the second drive socket **322** of the second rotary drive system **320**.

As will be discussed in further detail below, the first and second rotary drive systems **300**, **320** may be used to power various component portions of the interchangeable surgical tool assembly that is coupled thereto. As indicated above, in at least one arrangement, if during the actuation of the interchangeable surgical tool assembly, power was lost to the motor, the shifter spring **266** will bias the shifter gear **250** to the first position. Depending upon which component portion of the interchangeable surgical tool assembly was being operated, it may be necessary to reverse the application of the rotary drive motion to the first drive system **300** to enable the interchangeable surgical tool assembly to be removed from the patient. The handle assembly **20** of the illustrated example employs a manually actuatable "bailout" system, generally designated as **330**, for manually applying a rotary drive motion to the first rotary drive system **300** in the above described scenario, for example.

Referring now to FIGS. **3**, **10** and **11**, the illustrated bailout system **330** comprises a bailout drive train **332** that includes a planetary gear assembly **334**. In at least one form, the planetary gear assembly **334** includes a planetary gear housing **336** that houses a planetary gear arrangement (not shown) that includes a planetary bevel gear **338**. The planetary gear assembly **334** includes a bailout drive shaft **340** that is operably coupled to the planetary gear arrangement within the planetary gear housing **336**. Rotation of the planetary bevel gear **338** rotates the planetary gear arrangement which ultimately rotates the bailout drive shaft **340**. A bailout drive gear **342** is journaled on the bailout drive shaft **340** so that the bailout drive gear **342** can move axially on the bailout drive shaft **340**, yet rotate therewith. The bailout drive gear **342** is movable between a spring stop flange **344** that is formed on the bailout drive shaft **340** and a shaft end stop **346** that is formed on the distal end of the bailout drive shaft **340**. A bailout shaft spring **348** is journaled on the bailout drive shaft **340** between the bailout drive gear **342** and the spring stop flange **344**. The bailout shaft spring **348** biases the bailout drive gear **342** distally on the bailout drive shaft **340**. When the bailout drive gear **342** is in its distalmost position on the bail out drive shaft **340**, it is in meshing engagement with a bailout driven gear **350** that is non-rotatably mounted to the system drive shaft **232**. See FIG. **14**.

Referring now to FIGS. **12** and **13**, the bailout system **330** includes a bailout actuator assembly or bailout handle assembly **360** that facilitates the manual application of a bailout drive motion to the bailout drive train **332**. As can be seen in those Figures, the bailout handle assembly **360** includes a bailout bevel gear assembly **362** that comprises a

bailout bevel gear **364** and a ratchet gear **366**. The bailout handle assembly **360** further includes a bailout handle **370** that is movably coupled to the bailout bevel gear assembly **362** by a pivot yoke **372** that is pivotally mounted on the ratchet gear **366**. The bailout handle **370** is pivotally coupled to the pivot yoke **372** by a pin **374** for selective pivotal travel between a stored position "SP" and an actuation position "AP". See FIG. **12**. A handle spring **376** is employed to bias the bailout handle **370** into the actuation position AP. In at least one arrangement, the angle between the axis SP representing the stored position and the axis AP representing the actuation position may be approximately thirty degrees, for example. See FIG. **13**. As can also be seen in FIG. **13**, the bailout handle assembly **360** further includes a ratchet pawl **378** that is rotatably mounted in a cavity or hole **377** in the pivot yoke **372**. The ratchet pawl **378** is configured to meshingly engage the ratchet gear **366** when rotated in an actuation direction "AD" and then rotate out of meshing engagement when rotated in the opposite direction. A ratchet spring **384** and ball member **386** are movably supported in a cavity **379** in the pivot yoke **372** and serve to lockingly engage detents **380**, **382** in the ratchet pawl **378** as the bailout handle **370** is actuated (ratcheted).

Referring now to FIGS. **3** and **10**, the bailout system **330** further includes a bailout access panel **390** that is maneuverable between an open position and a closed position. In the illustrated arrangement, the bailout access panel **390** is configured to be removably coupled to the housing segment **70** of the primary housing portion **30**. Thus, in at least that embodiment, when the bailout access panel **390** is removed or detached from the primary housing portion **30**, it is said to be in an "open" position and when the bailout access panel **390** is attached to the primary housing portion **30** as illustrated, it is said to be in a "closed" position. Other embodiments are contemplated, however, wherein the access panel is movably coupled to the primary housing portion such that when the access panel is in the open position, it remains attached thereto. For example, in such embodiments, the access panel may be pivotally attached to the primary housing portion or slidably attached to the primary housing portion and be maneuverable between an open position and a closed position. In the illustrated example, the bailout access panel **390** is configured to snappingly engage corresponding portions of the housing segment **70** to removably retain it in a "closed" position. Other forms of mechanical fasteners such as screws, pins, etc. could also be used.

Regardless of whether the bailout access panel **390** is detachable from the primary housing portion **30** or it remains movably attached to the primary housing portion **30**, the bailout access panel **390** includes a drive system locking member or yoke **392** and a bailout locking member or yoke **396** that each protrudes out from the backside thereof or are otherwise formed thereon. The drive system locking yoke **392** includes a drive shaft notch **394** that is configured to receive a portion of the system drive shaft **232** therein when the bailout access panel **390** is installed in the primary housing portion **30** (i.e., the bailout access panel is in the "closed" position). When the bailout access panel **390** is positioned or installed in the closed position, the drive system locking yoke **392** serves to bias the driven bevel gear **234** into meshing engagement with the driver bevel gear **230** (against the bias of the drive system spring **235**). In addition, the bailout locking yoke **396** includes a bailout drive shaft notch **397** that is configured to receive a portion of the bailout drive shaft **340** therein when the bailout access panel **390** is installed or positioned in the closed position. As can be seen in FIGS. **5** and **10**, the bailout locking yoke **396** also serves to bias the bailout drive gear **342** out of meshing engagement with the bailout driven gear **350** (against the bias of the bailout shaft spring **348**). Thus, the bailout locking yoke **396** prevents the bailout drive gear **342** from interfering with rotation of the system drive shaft **232** when the bailout access panel **390** is installed or in the closed position. In addition, the bailout locking yoke **396** includes a handle notch **398** for engaging the bailout handle **370** and retaining it in the stored position SP.

FIGS. **4**, **5** and **10** illustrate the configurations of the drive system components and the bailout system components when the bailout access panel **390** is installed or is in the closed position. As can be seen in those Figures, the drive system locking member **392** biases the driven bevel gear **234** into meshing engagement with the driver bevel gear **230**. Thus, when the bailout access panel **390** is installed or is in the closed position, actuation of the motor **200** will result in the rotation of the driver bevel gear **230** and ultimately the system drive shaft **232**. Also, when in that position, the bailout locking yoke **396** serves to bias the bailout drive gear **342** out of meshing engagement with the bailout driven gear **350** on the system drive shaft **232**. Thus, when the bailout access panel **390** is installed or is in the closed position, the drive system is actuatable by the motor **200** and the bailout system **330** is disconnected or prevented from applying any actuation motion to the system drive shaft **232**. To activate the bailout system **330**, the clinician first removes the bailout access panel **390** or otherwise moves the bailout access panel **390** to the open position. This action removes the drive system locking member **392** from engagement with the driven bevel gear **234** which thereby permits the drive system spring **235** to bias the driven bevel gear **234** out of meshing engagement with the driver bevel gear **230**. In addition, removal of the bailout access panel **390** or movement of the bailout access panel to an open position also results in the disengagement of the bailout locking yoke **396** with the bailout drive gear **342** which thereby permits the bailout shaft spring **348** to bias the bailout drive gear **342** into meshing engagement with the bailout driven gear **350** on the system drive shaft **232**. Thus, rotation of the bailout drive gear **342** will result in rotation of the bailout driven gear **350** and the system drive shaft **232**. Removal of the bailout access panel **390** or otherwise movement of the bailout access panel **390** to an open position also permits the handle spring **376** to bias the bailout handle **370** into the actuation position shown in FIGS. **11** and **14**. When in that position, the clinician can manually ratchet the bailout handle **370** in the ratchet directions RD which results in the rotation of the of the ratchet bevel gear **364** (in a clockwise direction in FIG. **14**, for example) which ultimately results in the application of a retraction rotary motion to the system drive shaft **232** through the bailout drive train **332**. The clinician may ratchet the bailout handle **370** a number of times until the system drive shaft **232** has been sufficiently rotated a number of times to retract a component of the surgical end effector portion of the surgical tool assembly that is attached to the handle assembly **20**. Once the bailout system **330** has been sufficiently manually actuated, the clinician may then replace the bailout access panel **390** (i.e., return the bailout access panel **390** to the closed position) to thereby cause the drive system locking member **392** to bias the driven bevel gear **234** into meshing engagement with the driver bevel gear **230** and the bailout locking yoke **396** to bias the bailout drive gear **342** out of meshing engagement with the bailout driven gear **350**. As was discussed above, should power be lost or interrupted, the shifter spring **266**

will bias the shifter solenoid **260** into the first actuation position. As such, actuation of the bailout system **330** will result in the application of reversing or retraction motions to the first rotary drive system **300**.

As discussed above, a surgical stapling instrument can comprise a manually-actuated bailout system configured to retract a staple firing drive, for example. In many instances, the bailout system may need to be operated and/or cranked more than one time to fully retract the staple firing drive. In such instances, the user of the stapling instrument may lose track of how many times they have cranked the bailout and/or otherwise become confused as to how much further the firing drive needs to be retracted. Various embodiments are envisioned in which the stapling instrument comprises a system configured to detect the position of a firing member of the firing drive, determine the distance in which the firing member needs to be retracted, and display that distance to the user of the surgical instrument.

In at least one embodiment, a surgical stapling instrument comprises one or more sensors configured to detect the position of the firing member. In at least one instance, the sensors comprise Hall Effect sensors, for example, and can be positioned in a shaft and/or end effector of the stapling instrument. The sensors are in signal communication with a controller of the surgical stapling instrument which is, in turn, in signal communication with a display on the surgical stapling instrument. The controller comprises a microprocessor configured to compare the actual position of the firing member to a datum, or reference, position—which comprises a fully retracted position of the firing member—and calculate the distance, i.e., the remaining distance, between the actual position of the firing member and the reference position.

Further to the above, the display comprises an electronic display, for example, and the controller is configured to display the remaining distance on the electronic display in any suitable manner. In at least one instance, the controller displays a progress bar on the display. In such instances, an empty progress bar can represent that the firing member is at the end of its firing stroke and a full progress bar can represent that the firing member has been fully retracted, for example. In at least one instance, 0% can represent that the firing member is at the end of its firing stroke and 100% can represent that the firing member has been fully retracted, for example. In certain instances, the controller is configured to display how many actuations of the bailout mechanism are required to retract the firing member to its fully retracted position on the display.

Further to the above, the actuation of the bailout mechanism can operably disconnect a battery, or power source, of the surgical stapling instrument from an electric motor of the firing drive. In at least one embodiment, the actuation of the bailout mechanism flips a switch which electrically decouples the battery from the electric motor. Such a system would prevent the electric motor from resisting the manual retraction of the firing member.

The illustrated handle assembly **20** also supports a third axial drive system that is generally designated as **400**. As can be seen in FIGS. **3** and **4**, the third axial drive system **400**, in at least one form, comprises a solenoid **402** that has a third drive actuator member or rod **410** protruding therefrom. The distal end **412** of the third drive actuator member **410** has a third drive cradle or socket **414** formed therein for receiving a corresponding portion of a drive system component of an interchangeable surgical tool assembly that is operably attached thereto. The solenoid **402** is wired to or otherwise communicates with the handle circuit board assembly **220** and the control system or CPU **224**. In at least one arrangement, the solenoid **402** is "spring loaded" such that when the solenoid **402** is unactuated, the spring component thereof biases the third drive actuator **410** back to an unactuated starting position.

As indicated above, the reconfigurable handle assembly **20** may be advantageously employed to actuate a variety of different interchangeable surgical tool assemblies. To that end, the handle assembly **20** includes a tool mounting portion that is generally designated as **500** for operably coupling an interchangeable surgical tool assembly thereto. In the illustrated example, the tool mounting portion **500** includes two inwardly facing dovetail receiving slots **502** that are configured to engage corresponding portions of a tool attachment module portion of the interchangeable surgical tool assembly. Each dovetail receiving slot **502** may be tapered or, stated another way, be somewhat V-shaped. The dovetail receiving slots **502** are configured to releasably receive corresponding tapered attachment or lug portions that are formed on a portion of the tool attachment nozzle portion of the interchangeable surgical tool assembly. Each interchangeable surgical tool assembly may also be equipped with a latching system that is configured to releasable engage corresponding retention pockets **504** that are formed in the tool mounting portion **500** of the handle assembly **20**.

The various interchangeable surgical tool assemblies may have a "primary" rotary drive system that is configured to be operably coupled to or interface with the first rotary drive system **310** as well as a "secondary" rotary drive system that is configured to be operably coupled to or interface with the second rotary drive system **320**. The primary and secondary rotary drive systems may be configured to provide various rotary motions to portions of the particular type of surgical end effector that comprises a portion of the interchangeable surgical tool assembly. To facilitate operable coupling of the primary rotary drive system to the first rotary drive system and the secondary drive system to the second rotary drive system **320**, the tool mounting portion **500** of the handle assembly **20** also includes a pair of insertion ramps **506** that are configured to bias portions of the primary and secondary rotary drive systems of the interchangeable surgical tool assembly distally during the coupling process so as to facilitate alignment and operable coupling of the primary rotary drive system to the first rotary drive system **300** on the handle assembly **20** and the secondary rotary drive system to the second rotary drive system **320** on the handle assembly **20**.

The interchangeable surgical tool assembly may also include a "tertiary" axial drive system for applying axial motion(s) to corresponding portions of the surgical end effector of the interchangeable surgical tool assembly. To facilitate operable coupling of the tertiary axial drive system to the third axial drive system **400** on the handle assembly **20**, the third drive actuator member **410** is provided with a socket **414** that is configured to operably receive a lug or other portion of the tertiary axial drive system therein.

An interchangeable tool assembly **2000** is illustrated in FIG. **15**. The interchangeable tool assembly **2000** is similar to the interchangeable tool assembly **1000** in many respects, but is different than the interchangeable tool assembly **1000** in certain other respects. For instance, the interchangeable assembly **2000** is a circular stapling assembly. Referring primarily to FIGS. **15** and **16**, the circular stapling assembly **2000** comprises a shaft portion **2100** and an end effector **2200**. The shaft portion **2100** comprises a proximal portion which is releasably attachable to the handle assembly **20**, for

example. The end effector **2200** comprises a first portion **2210** rotatably attached to the shaft portion **2100** about an articulation joint **2300**. The end effector **2200** further comprises a second portion **2220** releasably attached to the first portion **2210**. The second portion **2220** comprises a cartridge portion **2222** including an annular array of staple cavities **2224** defined therein and a staple stored in each staple cavity **2224**. The second portion **2220** further comprises an anvil **2230** including a tissue compression surface **2232** and an annular array of forming pockets or forming pockets **2234** (FIG. **27**) registered with the staple cavities **2224** which are configured to deform the staples when the staples are ejected from the staple cavities **2224**.

Further to the above, referring again to FIGS. **15** and **16**, the second portion **2220** of the end effector **2200** is selectively attachable to and selectively detachable from the first portion **2210** of the end effector **2200**. The second portion **2220** comprises an outer housing **2227** including a proximal connector **2229** which is configured to be received within an aperture, or chamber, **2218** defined in a housing **2217** of the first portion **2210**. The fit between the connector **2229** of the housing **2227** and the housing **2217** of the first portion **2210** is snug. A compression fit between the connector **2229** and the housing **2217** can prevent the second portion **2220** from being accidentally displaced longitudinally and/or rotationally relative to the first portion **2210**. In various instances, a detent member can be utilized to releasably secure the second portion **2220** to the first portion **2210** of the end effector **2200**.

Referring to FIGS. **15** and **35-38**, the second portion **2220** of the end effector **2200** is interchangeable with other second portions such as a second portion **2220'**, a second portion **2220"**, a second portion **2220'''**, and/or another second portion **2220**, for example. The second portions **2220'**, **2220"**, and **2220'''** are similar to the second portion **2220** in many respects. For instance, each second portion **2220**, **2220'**, **2220"**, and **2220'''** includes a central aperture **2226** defined therein. That said, the second portions **2220'**, **2220"**, and **2220'''** are different than the second portion **2220** in other respects. For instance, the second portion **2220'** has a larger diameter than the second portion **2220**. Moreover, the annular array of staple cavities **2224** defined in the second portion **2220'** has a larger circumference than the annular array of staple cavities **2224** defined in the second portion **2220**. Similarly, the second portion **2220"** has a larger diameter than the second portion **2220'** and the annular array of staple cavities **2224** defined in the second portion **2220"** has a larger circumference than the annular array of staple cavities **2224** defined in the second portion **2220'**. Also, similarly, the second portion **2220'''** has a larger diameter than the second portion **2220"** and the annular array of staple cavities **2224** defined in the second portion **2220'''** has a larger circumference than the annular array of staple cavities **2224** defined in the second portion **2220"**.

Further to the above, the anvil **2230** is interchangeable with other anvils such as an anvil **2230'**, an anvil **2230"**, an anvil **2230'''**, and/or another anvil **2230**, for example. The anvils **2230'**, **2230"**, and **2230'''** are similar to the anvil **2230** in many respects. For instance, each anvil **2230**, **2230'**, **2230"**, and **2230'''** comprises a longitudinal shaft **2236** including connecting flanges **2238**. That said, the anvils **2230'**, **2230"**, and **2230'''** are different than the anvil **2230** in other respects. For instance, the anvil **2230'** has a larger diameter than the anvil **2230**. Moreover, the annular array of the forming pockets **2234** defined in the anvil **2230'** has a larger circumference than the annular array of forming pockets **2234** defined in the anvil **2230** such that the forming pockets **2234** remain registered with the staple cavities **2224** defined in the second portion **2220'** Similarly, the anvil **2230"** has a larger diameter than the anvil **2230'** and the annular array of forming pockets **2234** defined in the anvil **2230"** has a larger circumference than the annular array of forming pockets **2234** defined in the anvil **2230'** such that the forming pockets **2234** remain registered with the staple cavities **2224** defined in the second portion **2220"**. Also, similarly, the anvil **2230'''** has a larger diameter than the anvil **2230"** and the annular array of forming pockets **2234** defined in the second portion **2220'''** has a larger circumference than the annular array of forming pockets **2234** defined in the anvil **2230"** such that the forming pockets **2234** remain registered with the staple cavities **2224** defined in the second portion **2220'''**.

Referring primarily to FIG. **17**, the shaft portion **2100** comprises a proximal connector **2120** and an elongate shaft portion **2110** extending distally from the proximal connector **2120**. The proximal connector **2120** comprises a first input **2318** and a second input **2418**. The first input **2318** is operably connected to an end effector articulation system and the second input **2418** is operably connected to an end effector clamping and staple firing system. The first input **2318** and the second input **2418** can be operated in any suitable order. For instance, the first input **2318** can be rotated in a first direction to articulate the end effector **2200** in a first direction and, correspondingly, rotated in a second direction to articulate the end effector **2200** in a second direction. Once the end effector **2200** has been suitably articulated, the second input **2428** can then be rotated to close the anvil **2230** and clamp tissue against the cartridge portion **2222** of the end effector **2200**. As discussed in greater detail further below, the second input **2428** can then be operated to fire the staples from the staple cavities **2224** and incise tissue captured within the end effector **2200**. In various alternative embodiments, the first input **2318** and the second input **2328** can be operated in any suitable order and/or at the same time.

The first input **2318** is mounted to a proximal end of an articulation shaft **2310** which is rotatably mounted in the shaft portion **2010**. Referring primarily to FIGS. **20** and **21**, the rotatable articulation shaft **2310** comprises a distal end and a worm gear **2312** mounted to the distal end. The worm gear **2312** is threadably engaged with an articulation slide **2320**. More specifically, the articulation slide **2320** comprises a threaded aperture **2322** defined therein and the worm gear **2312** is threadably mated with the threaded aperture **2322**. When the articulation shaft **2310** is rotated in a first direction, the worm gear **2312** pushes the articulation slide **2320** distally (FIG. **32**). When the articulation shaft **2310** is rotated in a second, or opposite, direction, the worm gear **2312** pulls the articulation slide **2320** proximally (FIG. **31**). The articulation slide **2320** is slidably supported by an articulation block **2112** fixedly mounted in the distal end of the elongate shaft portion **2110**. The movement of the articulation slide **2320** is limited to proximal and distal movement by the articulation block **2112** by a guide slot **2315** defined in the articulation block **2112**. The articulation slide **2320** further comprises a longitudinal key **2326** extending therefrom which is closely received in a longitudinal keyway **2116** defined in the bottom of the guide slot **2315** which limits the relative movement between the articulation slide **2320** and the articulation block **2112** to a longitudinal path.

Referring again to FIGS. **20**, **21**, and **24**, the articulation slide **2320** is coupled to an articulation link **2330**. The articulation slide **2320** comprises a drive pin **2324** extending

therefrom which is positioned within a proximal aperture **2334** defined in the articulation link **2330**. The drive pin **2324** is closely received within the aperture **2334** such that the drive pin **2324** and the sidewalls of the aperture **2334** co-operate to define an axis of rotation between the articulation slide **2320** and the articulation link **2330**. The articulation link **2330** is also coupled to the housing **2217** of the end effector **2200**. More specifically, the articulation link **2330** further comprises a distal aperture **2335** defined therein and the housing **2217** comprises a pin **2215** positioned in the distal aperture **2335**. The pin **2215** is closely received within the aperture **2335** such that the pin **2215** and the sidewalls of the aperture **2335** co-operate to define an axis of rotation between the articulation link **2330** and the housing **2217**.

Further to the above, referring to FIGS. **18-21** and **24**, the end effector **2200** is rotatably coupled to the articulation block **2112** of the shaft **2100** about the articulation joint **2300**. The housing **2217** of the end effector **2200** comprises apertures **2213** defined in opposite sides thereof and the articulation block **2112** comprises projections **2113** extending from opposite sides thereof which are positioned in the apertures **2213**. The projections **2113** are closely received within the apertures **2213** such that the projections **2113** and the sidewalls of the apertures **2213** co-operate to define an articulation axis about which the end effector **2200** can be articulated. When the articulation shaft **2310** is rotated to drive the articulation slide **2320** distally, the articulation slide **2320** drives the proximal end of the articulation link **2330** distally. In response to the distal movement of the proximal end of the articulation link **2330**, the articulation link **2330** rotates about the drive pin **2324** which rotates the end effector **2200** about the articulation joint **2300**. When the articulation input **2310** is rotated to drive the articulation slide **2320** proximally, similar to the above, the articulation slide **2320** pulls the proximal end of the articulation link **2330** proximally. In response to the proximal movement of the proximal end of the articulation link **2330**, the articulation link **2330** rotates about the drive pin **2324** which rotates the end effector **2200** about the articulation joint **2300**. The articulation link **2330** provides at least one degree of freedom between the articulation slide **2320** and the housing **2217**. As a result, the articulation link **2330** permits the end effector **2200** to be articulated through a wide range of articulation angles.

As discussed above, referring to FIGS. **17** and **25**, the proximal connector **2120** of the interchangeable tool assembly **2000** comprises a second input **2418**. The second input **2418** comprises a drive gear **2417** which is meshingly engaged with a drive gear **2416** mounted on a proximal end of a drive shaft **2410**. The drive shaft **2410** extends through the shaft portion **2110** and an aperture **2114** defined in the articulation block **2112**, as illustrated in FIG. **19**. The aperture **2114** comprises a bearing and rotatably supports the drive shaft **2410**. Alternatively, the aperture **2114** can comprise a clearance aperture. In either event, referring primarily to FIG. **22**, the drive shaft **2410** extends through the articulation joint **2300** and into the chamber **2218** defined in the end effector housing **2217**. The drive shaft **2410** is rotatably supported by a bearing **2414** mounted to the drive shaft **2410** which is captured within a recess **2214** defined in the housing **2217** of the end effector **2200**. The drive shaft **2410** further comprises an output gear **2412** mounted to the distal end thereof such that the rotation of the drive shaft **2410** is transmitted to the output gear **2412**.

Referring primarily to FIGS. **18**, **22**, and **23**, the output gear **2412** of the drive shaft **2410** is operably engaged with a transmission **2420**. As discussed in greater detail below, the transmission **2420** is configured to shift the end effector **2200** between a first operating mode in which the drive shaft **2410** moves the anvil **2230** relative to the cartridge body **2222** and a second operating mode in which the drive shaft **2410** fires the staples from the staple cavities **2224** and incises the tissue captured between the anvil **2230** and the cartridge body **2222**. The transmission **2420** comprises an orbit drive comprising a planetary plate **2421** and four planetary gears **2424** rotatably mounted to the planetary plate **2421**. The planetary plate **2421** comprises a clearance aperture extending through the center thereof and the drive shaft **2410** extends through the clearance aperture. The planetary plate **2421** and the planetary gears **2424** are positioned in a chamber **2219** defined in the end effector housing **2217**. Each planetary gear **2424** is rotatable about a gear pin **2423** extending from the planetary plate **2421**. The gear pins **2423** are positioned along a circumference surrounding the clearance aperture. The output gear **2412** is meshingly engaged with the planetary gears **2424** and, as described in greater detail below, the drive shaft **2410** drives the planetary gears **2424**.

Further to the above, the drive shaft **2410** extends trough the articulation joint **2300**. In order for the output gear **2412** to remain properly engaged with the planetary gears **2424** when the end effector **2200** is articulated, the drive shaft **2410** is flexible. In at least one instance, the drive shaft **2410** is comprised of plastic, for example.

As discussed above, the transmission **2420** comprises a first operating mode and a second operating mode. Referring primarily to FIGS. **23** and **28**, the interchangeable tool assembly **2000** further comprises a shifter **2600** movable between a first position and a second position to switch the transmission **2420** between its first operating mode and its second operating mode. When the shifter **2600** is in its first position, as illustrated in FIGS. **28-30**, the shifter **2600** is not engaged with the planetary plate **2421** of the transmission **2420** and, as a result, the planetary plate **2421** and the planetary gears **2424** are rotated by the drive shaft **2410**. More specifically, the drive shaft **2410** rotates the planetary gears **2424** about their respective gear pins **2423** and the planetary gears **2424** rotate the planetary plate **2421** owing to reactionary forces between the planetary gears **2424** and an annular ring of teeth **2534** which extends around the planetary gears **2424**, as described in greater detail further below. The planetary plate **2421** is operably coupled with an output coupling **2430** such that the rotation of the planetary plate **2421** is transmitted to the output coupling **2430**. Referring primarily to FIG. **23**, the output coupling **2430** comprises an array of apertures **2433** extending around the outer perimeter thereof wherein the gear pins **2423** extending from the planetary plate **2421** extend into, and are closely received by, the apertures **2433** defined in the output coupling **2430** such that there is little, if any, relative movement between the planetary plate **2421** and the output coupling **2430**.

Referring primarily to FIGS. **18** and **23**, the output coupling **2430** comprises a drive socket **2432**. The drive socket **2432** comprises a substantially hexagonal aperture, for example; however, any suitable configuration could be utilized. The drive socket **2432** is configured to receive a closure shaft **2440** extending through the second portion **2220** of the end effector **2200**. The closure shaft **2440** comprises a proximal drive end **2442** which has a substantially-hexagonal shape that is closely received within the drive socket **2432** such that the rotation of the drive shaft **2410** is transferrable to the closure shaft **2440**. The closure shaft **2440** is rotatably supported within the housing **2227** of

the second portion **2220** by a bearing **2444**. The bearing **2444** comprises a thrust bearing, for example; however, the bearing **2444** may comprise any suitable bearing.

Referring primarily to FIGS. **23** and **28-30**, the closure shaft **2440** comprises a threaded portion **2446** that is threadably engaged with a threaded aperture **2456** defined in a trocar **2450**. As discussed in greater detail further below, the anvil **2230** is attachable to the trocar **2450** which can be translated to move the anvil **2230** toward and/or away from the cartridge body **2222**. Referring again to FIG. **18**, the trocar **2450** comprises at least one longitudinal key slot **2459** defined therein which is configured to co-operate with at least one longitudinal key extending from an inner surface **2546** of the drive sleeve **2540**. The drive sleeve **2540** is part of the staple firing system, discussed further below, and the reader should understand that the trocar **2450** and the drive sleeve **2540**, one, slide relative to one another, and, two, co-operatively inhibit relative rotational movement therebetween. Owing to the threaded engagement between the closure shaft **2440** and the trocar **2450**, the closure shaft **2440** can displace, or translate, the trocar **2450** distally when the closure shaft **2440** is rotated in a first direction and, correspondingly, displace, or translate, the trocar **2450** proximally when the closure shaft **2440** is rotated in a second, or opposite, direction.

As discussed above, the anvil **2230** is attachable to the trocar **2450**. The anvil **2230** comprises connecting flanges **2238** which are configured to engage and grip the trocar **2450**. The connecting flanges **2238** comprise cantilever beams which are connected to the shaft portion **2236** of the anvil **2230**. Referring primarily to FIG. **23**, the trocar **2450** comprises retention notches, or recesses, **2458** which are configured to releasably receive the connecting flanges **2238** when the anvil **2230** is assembled to the trocar **2450**. The retention notches **2458** and the connecting flanges **2238** are configured to resist the inadvertent detachment of the anvil **2230** from the trocar **2450**. The connecting flanges **2238** are separated by longitudinal slots **2237**. The longitudinal slots **2237** are configured to receive longitudinal ribs **2457** extending from the trocar **2450** when the anvil **2230** is assembled to the trocar **2450**. The ribs **2457** are closely received within the slots **2237** and, as a result, the anvil **2230** is inhibited from rotating relative to the trocar **2450**.

Once the anvil **2230** has been suitably positioned relative to the cartridge portion **2222**, as discussed above, the tool assembly **2000** can be shifted into its second operating mode. The shifter **2600** comprises an electrically-actuated motor, for example, which is utilized to shift the transmission **2420** of the end effector **2200**. In various other embodiments, the shifter **2600** can comprise any suitable device which is electrically and/or manually actuated. The shifter **2600** is in signal communication with a processor of the surgical stapling instrument and in power communication with a battery of the surgical stapling instrument. In various instances, insulated electrical wires, for example, extend between the shifter **2600** and a handle of the surgical instrument such that the processor can communicate with the shifter **2600** and the battery can supply power to the shifter **2600**. In various other instances, the shifter **2600** can comprise a wireless signal receiver and the processor can communicate wirelessly with the shifter **2600**. In certain instances, power can be supplied wirelessly to the shifter **2600**, such as through an inductive circuit, for example. In various instances, the shifter **2600** can comprise its own power source.

The shifter **2600** comprises a housing mounted in the chamber **2218** defined in the proximal end of the end effector **2200**. The shifter **2600** comprises a clutch key, or toggle, **2602** and an output shaft **2604** movable between a first position and a second position relative to the shifter housing. The clutch key **2602** comprises a first lock tooth **2608** and a second lock tooth **2609** and, when the clutch key **2602** is in its first position, the first lock tooth **2608** is engaged with a firing tube **2530** of the staple firing system and, concurrently, the second lock tooth **2609** is disengaged from the planetary plate **2421** of the transmission **2420**. More specifically, the first lock tooth **2608** is positioned in an aperture **2538**, which is part of an annular array of apertures **2538** defined around the firing tube **2530**, and the second lock tooth **2609** is not positioned in an aperture **2429**, which is part of an annular array of apertures **2429** defined around the planetary plate **2421**. As a result of the above, the shifter **2600** prevents the firing tube **2530** from rotating and, accordingly, locks out the staple firing system when the clutch key **2602** is in its first position. Although the staple firing system has been locked out by the shifter **2600** when the clutch key **2602** is in its first position, the drive shaft **2410** can rotate the planetary plate **2421** and operate the anvil closure system, as discussed above.

As illustrated primarily in FIG. **23**, the firing tube **2530** comprises an inner annular rack of teeth **2534** defined in an inner sidewall **2532** thereof. The planetary gears **2424** are operably intermeshed with the rack of teeth **2534**. When the shifter **2600** is in its first position, as illustrated in FIG. **28**, the firing tube **2530** is held in position by the shifter **2600** and the planetary gears **2424** are rotatable relative to the firing tube **2530** and the rack of teeth **2534** by the drive shaft **2410**. In such instances, the planetary gears **2424** are rotated about a longitudinal drive axis defined by the drive shaft **2410** and, at the same time, rotated about axes defined by their respective gear pins **2423**. The reader should appreciate that the planetary gears **2424** are directly driven by the drive shaft **2410** and, owing to reactionary forces created between the planetary gears **2424** and the firing tube **2530**, the planetary gears **2424** drive and rotate the planetary plate **2421**. When the shifter **2600** is actuated to move the clutch key **2602** into its second position, the first lock tooth **2608** is disengaged from the firing tube **2530** and, concurrently, the second lock tooth **2609** is engaged with the planetary plate **2421**. The planetary plate **2421** is held in position by the shifter **2600** when the clutch key **2602** is in its second position and, as a result, the closure drive has been locked out and cannot be operated to move the anvil **2230**. When the drive shaft **2410** is rotated in such instances, the output gear **2412** drives and rotates the planetary gears **2424** relative to the planetary plate **2421** about their respective gear pins **2423**. The planetary gears **2424** drive the firing tube **2530** via the rack of teeth **2534** and rotate the firing tube **2530** about its longitudinal axis.

Further to the above, and referring again to FIG. **23**, the firing tube **2530** is operably coupled with the drive sleeve **2540** of the staple firing system. More specifically, the inner sidewall **2532** of the firing tube **2530** comprises longitudinal slots **2535** defined therein which are configured to closely receive longitudinal ribs **2545** defined on the drive sleeve **2540** such that the drive sleeve **2540** rotates with the firing tube **2530**. The drive sleeve **2540** further comprises a threaded distal end **2542** which is threadably engaged with a drive collar **2550**. More specifically, the drive collar **2550** comprises a threaded aperture **2552** which is threadably engaged with the threaded distal end **2542**. The drive collar **2550** is positioned in an aperture **2228** defined in the housing of the end effector **2200** and is prevented from rotating within the aperture **2228** by a longitudinal rib and groove

arrangement, for example. As a result of the above, the rotation of the drive sleeve **2540** translates the drive collar **2550** longitudinally. For instance, the drive collar **2550** is advanced distally if the drive sleeve **2540** is rotated in a first direction and retracted proximally if the drive sleeve **2540** is rotated in a second, or opposite, direction.

When the drive collar **2550** is pushed distally, as discussed above, the drive collar **2550** pushes a staple driver block **2560** and a cutting member **2570**, such as a knife, for example, distally during a firing stroke of the staple firing system. More specifically, the drive collar **2550** pushes the staple driver block **2560** and the cutting member **2570** between a proximal, unfired position in which the staples are positioned in the staple cavities **2224** defined in the cartridge body portion **2222** and the cutting member **2570** is recessed below the deck surface of the cartridge body portion **2222** and a distal, fired position in which the staples have been deformed against the anvil **2230** and the tissue captured between the anvil **2230** and the cartridge body portion **2222** has been transected by the cutting member **2570**. The drive collar **2550** comprises a drive recess **2554** which is configured to abut the staple driver block **2560** and the cutting member **2570** as the drive collar **2550** is advanced distally. The staple driver block **2560** comprises a plurality of staple cradles defined therein wherein each staple cradle is configured to support the base of a staple. The staple cradles are aligned with the staple cavities **2224** defined in the cartridge body portion **2222** and are arranged in at least two concentric rows.

The staple driver block **2560** and the cutting member **2570** are attached to the drive collar **2550** such that, when the drive collar **2550** is moved proximally away from the anvil **2230**, the staple driver block **2560** and the cutting member **2570** are pulled proximally by the drive collar **2550**. In at least one instance, the staple driver block **2560** and the cutting member **2570** comprise one or more hooks which extend into apertures **2557** defined in the drive collar **2550**. In various instances, the staple driver block **2560** and the cutting member **2570** can be retracted such that they are completely retracted below the deck surface of the cartridge body portion **2222**.

Further to the above, the end effector **2200** is operable in a third operating mode in which the clutch key **2602** of the shifter **2600** is operably engaged with the anvil closure system and the staple firing system at the same time. In this operating mode, the first lock tooth **2608** is engaged with the firing tube **2530** of the staple firing system and the second lock tooth **2609** is engaged with the planetary plate **2421** of the transmission **2420**. In such instances, the first lock tooth **2608** is positioned in an aperture **2538** defined in the firing tube **2530** and the second lock tooth **2609** is positioned in an aperture **2429** defined in the planetary plate **2421**. As a result of the above, the drive shaft **2410** moves the anvil **2230**, the staple driver block **2560**, and the cutting member **2570** relative to the cartridge body **2222** at the same time.

Referring again to FIG. **15**, the user of the interchangeable tool assembly **2000** can select from a kit of second portions **2220**, **2220'**, **2220"**, **2220'"** and/or any other suitable second portion and assembly the selected second portion to the first portion **2210** of the end effector **2200**. Referring primarily to FIG. **18**, each second portion comprises a housing connector **2229** which engages the housing **2217** of the first portion **2210** when the second portion is assembled to the first portion **2210**. In addition, each second portion comprises a closure shaft **2440** which operably engages the drive socket **2432** of the first portion **2210** when the second portion is assembled to the first portion **2210**. Moreover, each second portion comprises a drive sleeve **2540** which operably engages the firing tube **2530** of the first portion **2210** when the second portion is assembled to the first portion **2210**.

Further to the above, referring to FIGS. **35** and **36**, a tool assembly **2000'** is interchangeable with the tool assembly **2000**. The tool assembly **2000'** is similar to the tool assembly **2000** in many respects; however, the tool assembly **2000'** is configured to apply circular staple lines having larger diameters than the circular staple lines applied by the tool assembly **2000**. The tool assembly **2000'** comprises, among other things, a wider second portion **2220'**, staple driver **2560'**, knife assembly **2570'**, cartridge body **2222'**, and anvil **2230'**. Referring to FIG. **37**, a tool assembly **2000"** is interchangeable with the tool assembly **2000**. The tool assembly **2000"** is similar to the tool assemblies **2000** and **2000'** in many respects; however, the tool assembly **2000"** is configured to apply circular staple lines having larger diameters than the circular staple lines applied by the tool assembly **2000'**. The tool assembly **2000"** comprises, among other things, a wider second portion **2220"**, staple driver **2560"**, knife assembly **2570"**, cartridge body **2222"**, and anvil **2230"**. Referring to FIG. **38**, a tool assembly **2000'"** is interchangeable with the tool assembly **2000**. The tool assembly **2000"** is similar to the tool assemblies **2000**, **2000'**, and **2000"** in many respects; however, the tool assembly **2000'"** is configured to apply circular staple lines having larger diameters than the circular staple lines applied by the tool assembly **2000"**. The tool assembly **2000'"** comprises, among other things, a wider second portion **2220'"**, staple driver **2560'"**, knife assembly **2570'"**, cartridge body **2222'"**, and anvil **2230'"**.

In various embodiments, further to the above, a surgical instrument can have any suitable number of operating modes. In at least one embodiment, a surgical stapling instrument comprises a transmission which includes a first operating mode which fires the staples, a second operating mode which deploys the cutting member, and a third operating mode which both fires the staples and deploys the cutting member at the same time. In the first operating mode, the cutting member is not deployed. Moreover, the processor of such a surgical instrument can be programmed such that the instrument cannot be placed in the second operating mode without having first completed the first operating mode. As a result of the above, the user of the surgical instrument can decide whether or not to cut the tissue after the staples have been fired.

An alternative embodiment of a staple cartridge body for use with a surgical stapler is illustrated in FIG. **34**. A cartridge body **2222'** comprises an annular outer row of staple cavities **2224** and an annular inner row of staple cavities **2224'**. The staple cavities **2224** are defined in a first step of the cartridge body deck and the staple cavities **2224'** are defined in a second step of the cartridge body deck. The second step extends above the first step. Stated another way, the first step has a first deck height and the second step has a second deck height which is taller than the first deck height. A deck wall separates the first step and the second step. In various embodiments, the deck wall is sloped. In certain embodiments, the deck wall is orthogonal to the first step and/or the second step.

The cartridge body **2222'** further comprises cavity extensions **2229'** extending from the first step of the deck. The cavity extensions **2229'** surround the ends of the staple cavities **2224** and extend the staple cavities **2224** above the first step. The cavity extensions **2229'** can at least partially control the staples above the first step as the staples are ejected from the staple cavities **2224**. The cavity extensions

2229' are also configured to contact and compress tissue captured against the cartridge body 2222'. The cavity extensions 2229' can also control the flow of tissue relative to the cartridge body 2222'. For instance, the cavity extensions 2229' can limit the radial flow of the tissue. The cavity extensions 2229' can have any suitable configuration and can extend any suitable height from the first step. In at least one instance, the top surfaces of the cavity extensions 2229' are aligned with, or have the same height as, the second step, for example. In other instances, the cavity extensions 2229' can extend above or below the second step.

Further to the above, the staple cavities 2224 each comprise a first staple positioned therein having a first unformed height. The staple cavities 2224' each comprise a second staple positioned therein having a second unformed height which is different than the first unformed height. For instance, the first unformed height is taller than the second unformed height; however, the second unformed height could be taller than the first unformed height. In alternative embodiments, the first unformed staple height and the second unformed staple height is the same.

The first staples are deformed to a first deformed height and the second staples are deformed to a second deformed height which is different than the first deformed height. For instance, the first deformed height is taller than the second deformed height. Such an arrangement could improve blood flow into the stapled tissue. Alternatively, the second deformed height could be taller than the first deformed height. Such an arrangement could improve the pliability of the tissue along the inner transection line. In certain alternative embodiments, the first deformed height and the second deformed height is the same.

As discussed above, an interchangeable tool assembly can comprise, among other things, a shaft, an end effector, and a replaceable staple cartridge. The replaceable staple cartridge comprises a closure drive configured to move open and close the end effector to capture tissue within the end effector and a firing drive configured to staple and cut the tissue captured within the end effector. The closure drive and the firing drive of the end effector are operably coupled with a corresponding closure drive and firing drive of the shaft when the replaceable staple cartridge is assembled to the shaft. In the event that the replaceable staple cartridge is not properly assembled to the shaft, the replaceable staple cartridge may not operate in its intended manner. As described in greater detail below, the replaceable staple cartridge and/or the shaft can comprise a lockout which prevents the replaceable staple cartridge from being operated unless the replaceable staple cartridge is properly attached to the shaft.

Turning now to FIG. 39, an interchangeable tool assembly 3000 comprises a shaft 3010 and a replaceable staple cartridge 3020 Similar to the above, the replaceable staple cartridge 3020 comprises a closure drive input and a firing drive input which are operably coupled with a closure drive output and a firing drive output, respectively, when the staple cartridge 3020 is fully seated onto the shaft 3010. The operation of such closure and firing systems are not repeated herein for the sake of brevity.

The interchangeable tool assembly 3000 further comprises a lockout circuit 3090. The lockout circuit 3090 includes conductors 3096 and contacts 3092. A first contact 3092 is electrically coupled to a first conductor 3096 and a second contact 3092 is electrically coupled to a second conductor 3096. The first contact 3092 is not electrically coupled to the second contact 3092 prior to the staple cartridge 3020 being fully seated onto the shaft 3010. The staple cartridge 3020 comprises a contact bridge 3094 which engages and electrically couples the contacts 3092 when the staple cartridge 3020 is fully seated onto the shaft 3010. The contacts 3092 and the contact bridge 3094 are configured and arranged such that the contact bridge 3094 does not electrically couple the contacts 3092 when the staple cartridge 3020 is only partially seated onto the shaft 3010.

The interchangeable tool assembly 3000 is usable with a surgical instrument system which includes a manually-operable handle and/or a robotic system, for example. In various embodiments, the surgical instrument system includes an electric motor configured to drive the staple firing system of the tool assembly 3000 and, in addition, a controller configured to operate the electric motor. The lockout circuit of the tool assembly 3000 is in communication with the controller. When the controller detects that the contact bridge 3094 is not engaged with the contacts 3092, or that the lockout circuit is in an open condition, the controller prevents the electric motor from operating the staple firing system. In various instances, the controller is configured such that it does not supply power to the electric motor when the lockout circuit is in an open condition. In certain other instances, the controller is configured to supply power to the electric motor such that it can operate the closure system but not the firing system when the lockout circuit is in an open condition. In at least one such instance, the controller operates a transmission coupled to the electric motor such that the output of the electric motor is only directed to the closure system. When the controller detects that the contact bridge 3094 is engaged with the contacts 3092, or that the lockout circuit is in a closed condition, the controller allows the electric motor to operate the staple firing system.

When a surgical instrument system comprises a handle, further to the above, the controller can actuate a trigger lock which prevents a firing trigger of the handle from being actuated when the controller detects that the lockout circuit is in an open configuration. When the staple cartridge 3020 is fully seated onto the shaft 3010 and the lockout circuit is closed, the controller can retract the trigger lock and allow the firing trigger to be actuated. Such a system can be utilized with motorized and/or non-motorized firing drives. A non-motorized firing drive can be driven by a handcrank, for example.

As discussed above, an anvil 2230 can be assembled to the trocar shaft 2450 of the closure drive of the tool assembly 2000. The connecting flanges 2238 of the anvil 2230 are configured to engage a recess 2458 defined in the trocar shaft 2450 to connect the anvil 2230 thereto. Once the anvil 2230 has been assembled to the trocar shaft 2450, the trocar shaft 2450 and the anvil 2230 can be retracted, or pulled, toward the staple cartridge 2222 by the closure drive to compress tissue against the staple cartridge 2222. In some instances, however, the anvil 2230 may not be properly assembled to the trocar shaft 2450. The mis-assembly of the anvil 2230 to the trocar shaft 2450 can frequently occur when the trocar shaft 2450 is not sufficiently extended above the deck of the staple cartridge 2222 when a clinician attempts to assemble the anvil 2230 to the trocar shaft 2450. Oftentimes, in such instances, the anvil 2230 is sufficiently attached to the trocar shaft 2450 such that the trocar shaft 2450 can move the anvil 2230 toward the staple cartridge 2222 but, when the anvil 2230 begins to compress the tissue against the staple cartridge 2222, the anvil 2230 can detach from the trocar shaft 2450.

Turning now to FIGS. 39 and 40, an interchangeable tool assembly 3100 is depicted which is similar in many respects

to the interchangeable tool assembly **2000** discussed above. The tool assembly **2000** comprises a cartridge body **3120** comprising a deck **3121** configured to support tissue when the tissue is compressed against the cartridge body **3120** by the anvil **2130**. The tool assembly **3100** further comprises a closure drive configured to move the anvil **2130** relative to the cartridge body **3120**. The closure drive comprises a trocar shaft **3150** which, similar to the above, includes a recess defined therein. The recess comprises a distal shoulder **3158** which is configured to retain the anvil **2130** to the trocar shaft **3150**. In addition, the tool assembly **3100** further comprises a firing drive configured to eject staples from the cartridge body **3120**. The firing drive comprises a rotatable shaft **3162** and a translatable collar **3160** threadably engaged with the rotatable shaft **3162** which is configured to eject staples from the cartridge body **3120**. The rotatable shaft **3162** comprises a longitudinal aperture **3164** defined therein and the trocar shaft **3150** extends through the aperture **3164**.

Further to the above, the closure drive further comprises a clip **3190** mounted to the trocar shaft **3150**. The clip **3190** comprises a base **3192** mounted within a slot defined in the trocar shaft **3150**. The clip **3190** further comprises compliant arms, or appendages, **3198** extending from the base **3192**. The arms **3198** are movable between an extended position (FIG. **39**) and a deflected position (FIG. **40**). When the arms **3198** are in their deflected position, as illustrated in FIG. **40**, the anvil **2130** can be locked to the trocar shaft **3150**. The arms **3198** are held in their deflected position by the translatable collar **3160** of the firing drive when the trocar shaft **3150** has been sufficiently extended above the deck **3121** of the cartridge body **3120**, as illustrated in FIG. **40**. The translatable collar **3160** comprises an annular shoulder **3168** configured to resiliently bias the arms **3198** inwardly when the arms **3198** are brought into contact with the shoulder **3168**.

When the trocar shaft **3150** is not in a sufficiently extended position above the cartridge deck **3121**, the arms **3198** are not biased inwardly by the shoulder **3168**. In such instances, the arms **3198** are in their extended position, as illustrated in FIG. **39**. When the arms **3198** are in their extended position, the arms **3198** prevent the anvil **2130** from being attached to the trocar shaft **3150**. More specifically, the arms **3198** prevent the connecting flanges **2138** of the anvil **2130** from being seated behind the shoulder **3158** defined in the trocar shaft **3150**. In such instances, the arms **3198** prevent the anvil **2130** from being partially attached to the trocar shaft **3150** and, as a result, the clinician attempting to assemble the anvil **2130** to the trocar shaft **3150** cannot partially assemble the anvil **2130** to the trocar shaft **3150** and can avoid the issues discussed above. The reader should appreciate that the anvil **2130** is often assembled to the trocar shaft **3150** in situ, or within a patient, and the proper assembly of the anvil **2130** to the trocar shaft **3150** expedites the completion of the surgical technique being used. The system discussed above provides a lockout which prevents a partially assembled anvil from being compressed against the tissue.

Turning now to FIGS. **41-43**, an interchangeable tool assembly **3200** comprises a lockout configured to prevent a closure drive from being retracted without an anvil attached thereto, as discussed in greater detail below. The tool assembly **3200** comprises a shaft **3210** and an end effector **3220**. The end effector **3220** includes an outer housing **3227**, a cartridge body **3222**, and a longitudinal aperture **3226** defined therethrough. The tool assembly **3200** further comprises a closure drive including a trocar shaft **3250** and an anvil **3230** attachable to the trocar shaft **3250** Similar to the above, the closure drive is configured to move the anvil **3230** toward and away from the cartridge body **3222**. The trocar shaft **3250** is movable between an extended position and a retracted position. FIGS. **42** and **43** both illustrate the trocar shaft **3250** in its extended position.

Further to the above, the tool assembly **3200** further comprises a retraction lock **3290** configured to prevent the trocar shaft **3250** from being moved from its extended position (FIGS. **42** and **43**) toward its retracted position when the anvil **3230** is not assembled to the trocar shaft **3250**. The retraction lock **3290** comprises a lock arm **3292** rotatably mounted to the housing **3227** about a projection, or pin, **3294**. The retraction lock **3290** further comprises a spring **3296** engaged with the lock arm **3292** which is configured to bias the lock arm **3292** toward the trocar shaft **3250**. The trocar shaft **3250** comprises a lock shoulder **3258** and, when the anvil **3230** is not assembled to the trocar shaft **3250** as illustrated in FIG. **42**, the lock arm **3292** is configured to catch the lock shoulder **3258** and prevent the trocar shaft **3250** from being moved proximally. More specifically, the lock arm **3292** comprises a catch **3298** configured to slide under the lock shoulder **3258**. When the anvil **3230** is assembled to the trocar shaft **3250**, as illustrated in FIG. **43**, the anvil **3230** contacts the lock arm **3292** and displaces the lock arm **3292** away from the lock shoulder **3258**. At such point, the trocar shaft **3250** has been unlocked and can be moved toward the cartridge body **3222** into its retracted position.

Turning now to FIGS. **44-46**, an interchangeable tool assembly **3300** comprises a closure drive, a staple firing drive, and a lockout configured to prevent the staple firing drive from being operated until the anvil of the closure drive has been set to a proper tissue gap, as discussed in greater detail below. The tool assembly **3300** comprises a shaft **3310** and an end effector **3320**. The end effector **3320** includes an inner frame **3329**, an outer housing **3327**, and a cartridge body **3322**. Similar to the above, the closure drive includes a trocar shaft **3350** and an anvil **2230** attachable to the trocar shaft **3350**. Also similar to the above, the trocar shaft **3350** is movable between an extended position (FIG. **45**) and a retracted position (FIG. **46**) to move the anvil **2230** toward and away from the cartridge body **3322**. The firing drive includes a rotatable shaft **3360** which is configured to displace a firing drive distally to eject the staples stored in the cartridge body **3322**.

Further to the above, the end effector **3320** comprises a firing drive lock **3390** movably mounted to the inner frame **3329**. The firing drive lock **3390** comprises a lock pin **3394** and a lock spring **3398** positioned around the lock pin **3394**. The lock pin **3394** comprises a head **3392** and a stop **3396**. The lock spring **3398** is positioned intermediate the stop **3396** and a sidewall of a cavity **3328** defined in the inner frame **3329**. When the trocar shaft **3350** is in an extended position, as illustrated in FIG. **45**, the lock spring **3398** biases the lock pin **3394** into a lock aperture **3364** defined in the rotatable shaft **3360** of the staple firing drive. In such instances, the interaction between the lock pin **3394** and the sidewalls of the lock aperture **3364** prevent the shaft **3360** from being rotated to fire the staples from the cartridge body **3322**. When the trocar shaft **3350** is sufficiently retracted, the trocar shaft **3350** engages the head **3392** of the lock pin **3394**. The head **3392** comprises a cam surface defined thereon which is configured to be engaged by the trocar shaft **3350** to move the firing drive lock **3390** between a locked configuration (FIG. **45**) and an unlocked configuration (FIG. **46**). When the drive lock **3390** is in its unlocked configuration, the shaft **3360** of the firing drive can be rotated.

The firing drive lockout of the tool assembly **3300** requires the anvil **2230** to be moved into a predetermined position, or within a range of predetermined positions, before the staples can be fired. Moreover, the firing drive lockout of the tool assembly **3300** requires the tissue gap between the anvil **2230** and the cartridge body **3322** to be less than a certain distance before the staples can be fired. As a result, the position of the anvil **2230** and/or the closure system deactivates the staple firing lockout. Such an arrangement can assist in preventing the malformation of the staples and/or the undercompression of the tissue, among other things.

Turning now to FIGS. **47-49**, an interchangeable tool assembly **3400** comprises a closure drive configured to clamp tissue, a staple firing drive, and a firing drive lockout **3490** configured to prevent the staple firing drive from being operated prior to the closure drive applying a sufficient clamping pressure to the tissue. The closure drive comprises a trocar shaft **3450** and an anvil, such as anvil **2230**, for example, attached to the trocar shaft **3450** Similar to the above, the trocar shaft **3450** is movable from an extended position (FIG. **48**) to a retracted position (FIG. **49**) to compress tissue against a cartridge body of the tool assembly **3400**. The firing drive comprises a rotatable shaft **3460** configured to displace a staple driver distally and eject staples from the cartridge body.

The firing drive lockout **3490** is positioned intermediate the trocar shaft **3450** of the closure drive and the rotatable shaft **3460** of the firing drive. The firing drive lockout **3490** comprises a distal plate **3492**, a proximal plate **3494**, and a spring **3493** positioned intermediate the distal plate **3492** and the proximal plate **3494**. The firing drive lockout **3490** further comprises a lock pin **3498** movable between a locked configuration (FIG. **48**) in which the lock pin **3498** is engaged with the shaft **3460** and an unlocked configuration (FIG. **49**) in which the lock pin **3498** is disengaged from the shaft **3460**. The lock pin **3498** is positioned in a pin chamber **3496** defined between the distal plate **3492** and the proximal plate **3494**. More specifically, the lock pin **3498** comprises a beveled head positioned intermediate a cam **3495** defined on the distal plate **3492** and a cam **3495** defined on the proximal plate **3494**. When the trocar shaft **3450** is retracted proximally, the trocar shaft **3450** pushes the distal plate **3492** proximally and the cam **3495** defined on the distal plate **3492** engages the head of the lock pin **3498**. In such instances, the cam **3495** defined on the distal plate **3492**, in co-operation with the cam **3495** defined on the proximal plate **3494**, displace the lock pin **3498** into its unlocked configuration, as illustrated in FIG. **49**.

As discussed above, the cams **3495** of the firing drive lockout **3490** squeeze the head of the lock pin **3498** as the distal plate **3492** is moved toward the proximal plate **3494** by the trocar shaft **3450**. More specifically, the cams **3495** drive the lock pin **3498** inwardly and out of engagement with the rotatable shaft **3460**. The lock pin **3498** is positioned in a lock aperture **3468** defined in the shaft **3460** when the lock pin **3498** is in its locked configuration and, owing to the interaction between the lock pin **3498** and the sidewalls of the lock aperture **3468**, the lock pin **3498** prevents the shaft **3460** from rotating. As a result, the staples cannot be fired from the cartridge body by the firing drive. When the lock pin **3498** is moved into is unlocked configuration, as discussed above, the lock pin **3498** is moved out of the lock aperture and the shaft **3460** can be rotated by the firing drive to fire the staples from the cartridge body. In various embodiments, the shaft **3460** can include a circumferential array of lock apertures **3468** defined in the shaft **3460**, each of which is configured to receive the lock pin **3498** and lockout the firing drive. Referring again to FIGS. **49-51**, the firing drive lockout **3490** further comprises a biasing member, such as a spring **3499**, for example, which is configured to bias the lock pin **3498** into a lock aperture **3468**.

Further to the above, the spring **3493** of the firing drive lockout **3490** is configured to resist the proximal movement of the trocar shaft **3450**. The spring **3493** is a linear coil spring; however, any suitable spring could be used. Moreover, more than one spring could be used. In any event, the spring **3493**, or spring system, has a stiffness which applies a spring force to the distal plate **3492** of the firing drive lockout **3490** as the trocar shaft **3450** is retracted. Stated another way, the force applied to the distal plate **3492** by the spring **3493** increases in proportion to the distance in which the trocar shaft **3450** is displaced proximally. The spring force generated by the spring **3493** opposes the clamping force that the anvil **2230** is applying to the tissue. As a result, the clamping force must overcome a certain, or predetermined, spring force being generated by the spring **3493** in order to sufficiently displace the distal plate **3492** and unlock the firing drive. In such instances, the tissue clamping force must meet a predetermined threshold before the firing drive lockout **3490** can be deactivated and the staple firing drive can be actuated.

As discussed in connection with various embodiments disclosed herein, a staple firing drive drives staples against an anvil to deform the staples to a desired formed height. In various instances, the staple firing drive is also configured to push a cutting member, such as a knife, for example, distally to cut tissue captured between the cartridge body and the anvil. In such instances, the knife is exposed above the deck of the cartridge body. That said, the anvil is positioned in close relationship to the cartridge body when the anvil is in its closed, or clamped, position and the knife is, for the most part, covered by the anvil even though the knife is exposed above the cartridge body. In the event that the anvil were to be moved to its open position and/or detached from the closure drive before the knife is retracted below the deck of the cartridge body, the knife would be uncovered and exposed. A tool assembly **3500** is illustrated in FIGS. **52-54** which comprises a lockout **3590** configured to prevent the anvil from being moved into its open position while the knife is exposed above the cartridge deck.

The tool assembly **3500** comprises a closure drive and a firing drive. The closure drive comprises a trocar shaft **3550** and an anvil **3530** releasably attachable to the trocar shaft **3550** Similar to the above, the trocar shaft **3550** is translatable proximally and distally by a rotatable closure shaft **2440** threadably engaged with the trocar shaft **3550**. The firing drive comprises a rotatable shaft **3562** and a translatable collar **3560** threadably engaged with the rotatable shaft **3562** Similar to the above, the collar **3560** is translatable proximally and distally when the shaft **3562** is rotated in first and second directions, respectively. Also similar to the above, the collar **3560** of the firing drive is configured to advance and retract an array of staple drivers and a knife assembly **2570** toward and away from the anvil **3530**.

Further to the above, the lockout **3590** comprises a lock arm **3592** rotatably mounted to the shaft **3562** of the firing drive about a pivot **3594**. The lockout **3590** further comprises a biasing member, or spring, **3599** engaged with the lock arm **3592** which is configured to bias the lock arm **3592** into contact with the anvil **3530**. In use, the anvil **3530** is assembled to the trocar shaft **3550** and the trocar shaft **3550** is then retracted to position the anvil **3530** in its closed, or clamped, position relative to the cartridge body. As the anvil

3530 is being retracted, the lock arm 3592 of the lockout 3590 slides against the outer surface of the anvil 3530 until the lock arm 3592 is aligned with a lock recess 3532 defined in the anvil 3530. At such point, the spring 3599 biases the lock arm 3592 into the lock recess 3532, as illustrated in FIG. 53. More specifically, the lock arm 3592 is positioned behind a lock shoulder which defines the lock recess 3532. The firing drive can then be operated to fire the staples and cut the tissue. In such instances, the cutting edge of the knife assembly 2570 is exposed above the cartridge body and, owing to the lockout 3590, the closure drive is locked out, or prevented from being opened, until the cutting edge of the knife assembly 2570 is no longer exposed.

Referring primarily to FIG. 52, the lock arm 3592 further comprises a reset tab 3593 extending therefrom. The collar 3560 of the firing drive further comprises a cam 3563 configured to engage the reset tab 3593 when the collar 3560 and the knife assembly 2570 are retracted proximally by the firing drive. The cam 3563 is configured to rotate the lock arm 3592 downwardly out of engagement with the lock shoulder defined in the lock recess 3532 and unlock the closure drive. The cam 3563 is configured to unlock the closure drive when the cutting edge of the knife assembly 2570 has been retracted below the cartridge deck; however, in other embodiments, the cam 3563 can unlock the closure drive when the cutting edge is flush with, or at least substantially flush with, the cartridge deck. In some embodiments, the closure drive may not be unlocked until the knife assembly 2570 has been completely retracted. Once the closure drive has been unlocked, the closure drive can be operated to move the anvil 3530 to an open, or unclamped, position once again.

Once the staples of an interchangeable tool assembly have been fired, according to various embodiments, the tool assembly may not be re-used. As discussed in greater detail below, a tool assembly can include a lockout configured to prevent the tool assembly from being re-clamped onto tissue after it has been used to staple tissue.

In at least one embodiment, referring now to FIGS. 53-56, an interchangeable tool assembly 3600 comprises a closure drive configured to position an anvil, such as anvil 2230, for example, relative to a staple cartridge and a firing drive configured to drive staples from the staple cartridge Similar to the above, the anvil 2230 is attachable to a translatable trocar shaft 3650 of the closure drive. Also similar to the above, the firing drive comprises a rotatable shaft 3660, a translatable collar 2550 threadably engaged with the rotatable shaft 3660, and a staple firing driver 2560 displaceable by the rotatable shaft 3660. In use, the closure drive is operable to position the anvil 2230 in a clamped position relative to the staple cartridge and the firing driver is then operable to fire the staples into tissue captured between the anvil 2230 and the staple cartridge. Thereafter, the closure drive is operated to open the anvil 2230 and release the tissue.

Further to the above, the tool assembly 3600 comprises a lockout 3690 configured to prevent the anvil 2230 from being reclamped onto the tissue. The lockout 3690 comprises a lock arm 3692 rotatably mounted to the rotatable shaft 3660 which is held in an unlocked configuration by the firing drive as the closure drive moves the anvil 2230 between an open, unclamped position (FIG. 53) and a closed, clamped position (FIG. 54). The lock arm 3692 is held in its unlocked configuration between the rotatable shaft 3660 and the translatable collar 2550 as the trocar shaft 3650 and the anvil 2230 are moved relative to the firing drive to position the anvil 2230 relative to the staple cartridge. The arm 3692 is held in its unlocked configuration until the firing drive is operated, as illustrated in FIG. 55. As the shaft 3460 is rotated in a first direction, the collar 2550 is displaced distally and a spring 3699 of the lockout 3690 can bias the lock arm 3692 against the trocar shaft 3650. The trocar shaft 3650 rotates relative to the lock arm 3692 as the collar 2550 is displaced distally to fire the staples and then retracted proximally. The closure drive can then be operated to re-open the anvil 2230 to unclamp the tissue and/or detach the anvil 2230 from the trocar shaft 3650. As the anvil 2230 is being re-opened, the spring 3699 biases the lock arm 3692 into a lock recess 3652 defined in the trocar shaft 3650 and/or anvil 2230. Once the lock arm 3692 is positioned in the lock recess 3652, the lock arm 3692 prevents the trocar shaft 3650 from being retracted proximally. In the event that the closure drive is operated in an attempt to retract the trocars shaft 3650 the lock arm 3692 will abut a lock shoulder defined in the lock recess 3652 and prevent the retraction of the trocar shaft 3650 and anvil 2230. As a result, the lockout 3690 prevents the anvil 2230 from being re-clamped onto tissue after the tool assembly 3600 has undergone, or at least partially undergone, a firing cycle and the tool assembly 3600 cannot be used again. Moreover, the lockout 3690 can serve as a spent cartridge lockout.

Turning now to FIGS. 59 and 60, a tool assembly 3700 comprises a staple cartridge 3720 and an anvil 3730. The tool assembly 3700 further comprises a closure system configured to move the anvil 3730 toward the staple cartridge 3720 and, in addition, a firing system configured to eject, or fire, staples removably stored in the staple cartridge 3720. The anvil 3730 comprises a longitudinal shaft portion 3736 and attachment arms 3738 extending from the shaft portion 3736 which are configured to resiliently grip a closure actuator, or trocar, 3734 of the closure system. The closure actuator 3734 is retractable proximally by a closure drive to move the trocar 3734 between an open, unclamped position (FIG. 59) and a closed, clamped position (FIG. 60). When the closure system is in its open configuration, as illustrated in FIG. 59, the staple firing system is disabled and cannot be actuated to fire the staples stored in the staple cartridge 3720, as described in greater detail below.

Further to the above, the staple firing system comprises a rotatable firing shaft 3750 comprising a threaded distal end and, in addition, a translatable firing nut 2550 comprising a threaded aperture configured to receive the threaded distal end of the firing shaft 3750. Notably, referring to FIG. 59, a gap is present between the threaded distal end of the firing shaft 3750 and the threaded aperture defined in the firing nut 2550 when the anvil 3730 is in its open position. As a result, the firing shaft 3750 cannot displace the firing nut 2550 distally until the firing shaft 3750 is threadably engaged with the firing nut 2550.

As illustrated in FIG. 60, the attachment arms 3738 of the anvil 3730 are configured to engage the firing shaft 3750 and deflect the firing shaft 3750 outwardly when the anvil 3730 is moved into its closed position. Referring primarily to FIGS. 59A and 60A, the attachment arms 3738 are configured to engage inwardly-extending projections 3758 defined on the firing shaft 3750 and push the projections 3758 and the perimeter of the firing shaft 3750 outwardly. In such instances, the threaded distal end of the firing shaft 3750 is pushed into operative engagement with the threaded aperture of the firing nut 2550 at a thread interface 3790 and, at such point, the firing shaft 3750 can displace the firing nut 2550 distally to eject the staples from the staple cartridge 3720 when the firing shaft 3750 is rotated by a firing drive. When the anvil 3730 is re-opened, the firing shaft 3750 will

return to its original configuration and become operably disengaged from the firing nut **2550**.

As a result of the above, the tool assembly **3700** comprises a lockout which prevents the staples from being fired if the anvil **3730** is not attached to the closure system, if the anvil **3730** is improperly attached to the closure system, and/or if the anvil **3730** is not sufficiently closed.

Turning now to FIGS. **61** and **62**, a tool assembly **3800** comprises a replaceable staple cartridge including staples removably stored therein, an anvil configured to deform the staples, a closure drive system configured to move the anvil relative to the staple cartridge, and a firing system configured to eject the staples from the staple cartridge. As discussed below, the tool assembly **3800** further comprises a lockout configured to prevent the firing system from being operated unless the staple cartridge is fully seated onto the tool assembly **3800**.

The staple cartridge comprises a cartridge frame **3820** configured to engage a shaft frame **3810** of the tool assembly **3800**. The staple cartridge further comprises a drive shaft **3830** which is inserted into the shaft frame **3810** when the staple cartridge is assembled to the tool assembly **3800**. More particularly, referring primarily to FIG. **64**, the drive shaft **3830** comprises a proximal end **3832** including an annular gear portion **3833** which is configured to engage and compress a transmission **3860** of the firing system when the staple cartridge is assembled to the tool assembly **3800**. Referring primarily to FIG. **62**, the transmission **3860** comprises a first portion **3862**, a second portion **3864**, and a third portion **3868** which, when pushed into operative engagement with each other, are able to transmit a rotary input motion to the drive shaft **3830**.

Referring primarily to FIGS. **63** and **64**, the annular gear portion **3833** of the drive shaft **3830** is configured to engage a corresponding gear portion **3863** defined on the distal side of the first transmission portion **3862** and, when the first transmission portion **3862** is pushed proximally by the drive shaft **3830**, the first transmission portion **3862** can operably engage the second transmission portion **3864**. More specifically, the first transmission portion **3862** comprises a proximal gear portion **3865** which engages a distal gear portion **3866** of the second transmission portion **3864** and, concurrently, pushes the second transmission portion **3864** proximally when the first transmission portion **3862** is pushed proximally by the drive shaft **3830**. When the second transmission portion **3864** is pushed proximally by the first transmission portion **3862**, similar to the above, the second transmission portion **3864** can operably engage the third transmission portion **3868**. More specifically, the second transmission portion **3862** comprises a proximal gear portion **3867** which engages a distal gear portion **3869** of the third transmission portion **3864** when the first transmission portion **3862** and the second transmission portion **3864** are pushed proximally by the drive shaft **3830**. The third transmission portion **3868** is operably coupled to an input shaft and supported from being displaced proximally by the input shaft and/or the shaft housing **3810**.

Referring primarily to FIG. **61**, the transmission **3860** further comprises at least one spring member **3870** positioned intermediate the first transmission portion **3862** and the second transmission portion **3864**. In at least one instance, the spring member **3870** can comprise one or more wave springs, for example. The spring member **3870** is configured to bias the first transmission portion **3862** and the second transmission portion **3864** apart from one another. In addition to or in lieu of the above, the transmission **3860** further comprises at least one spring member **3870** positioned intermediate the second transmission portion **3864** and the third transmission portion **3868** which, similar to the above, is configured to bias the second transmission portion **3864** and the third transmission portion **3868** apart from one another. Referring primarily to FIG. **65**, each spring member **3870** comprises two disc springs **3872** which are configured to deflect when a compressive force is applied thereto; however, the springs members **3870** can comprise any suitable configuration.

Further to the above, and referring again to FIG. **61**, the input shaft of the tool assembly **3800** can rotate the third transmission portion **3868**; however, the rotation of the third transmission portion **3868** cannot be transmitted to the second transmission portion **3864** unless the spring member **3870** positioned intermediate the second transmission portion **3864** and the third transmission portion **3868** has been sufficiently compressed to connect the proximal gear portion **3867** of the second transmission portion **3864** with the distal gear portion **3869** of the third transmission portion **3868**. Similarly, the second transmission portion **3864** cannot transmit rotary motion to the first transmission portion **3862** unless the spring member **3870** positioned intermediate the first transmission portion **3862** and the second transmission portion **3864** has been sufficiently compressed to connect the proximal gear portion **3865** of the first transmission portion **3862** and the distal gear portion **3866** of the second transmission portion **3864**. As discussed above, the drive shaft **3830** engages the first transmission portion **3862** with the second transmission portion **3864** and engages the second transmission portion **3864** with the third transmission portion **3868** when the staple cartridge is fully seated onto the shaft frame **3810**, as illustrated in FIG. **62**. In such instances, the rotation of the input shaft can be transmitted to the drive shaft **3830**. If the staple cartridge is not fully seated onto the shaft frame **3810**, however, one or more of the transmission portions **3862**, **3864**, and **3868** are not operably engaged with each other and the rotation of the input shaft cannot be transmitted to the drive shaft **3830**. Thus, the tool assembly **3800** assures that the staples stored within the staple cartridge cannot be ejected from the staple cartridge unless the staple cartridge is fully seated onto the shaft frame **3810**.

Turning now to FIGS. **66-68**, a tool assembly **3900** comprises a shaft **3910** and a replaceable staple cartridge **3920**. The replaceable staple cartridge **3920** comprises a closure drive configured to move an anvil relative to the staple cartridge **3920** and, in addition, a firing drive comprising a rotatable firing shaft **3930** configured to eject staples removably stored in the staple cartridge **3920** Similar to the above, the tool assembly **3900** comprises a lockout configured to prevent the firing drive from ejecting the staples from the staple cartridge **3920** unless the staple cartridge **3920** is fully, or sufficiently, seated onto the shaft **3910**. More specifically, the lockout prevents the firing shaft **3930** from rotating within the staple cartridge **3920** unless the staple cartridge **3920** is fully, or sufficiently, seated onto the shaft **3910**. In various instances, referring to FIG. **67**, the firing shaft **3930** comprises an annular array of lock apertures **3939** defined in the outer perimeter thereof and the staple cartridge **3920** comprises at least one lock **3929** configured to releasably engage a lock aperture **3939** defined in the shaft **3930**. The lock **3929** comprises a proximally-extending cantilever beam; however, any suitable configuration could be utilized The lock **3929** further comprises a locking projection that extends into the lock aperture **3939** and prevents the firing shaft **3930** from rotating, or at least substantially rotating, relative to the body of the staple cartridge **3920**. The lock **3929** is configured such that it is

biased into engagement with a lock aperture **3939** defined in the firing shaft **3930** until the lock **3929** is lifted out of the lock aperture **3939** when the staple cartridge **3920** is fully, or sufficiently, assembled to the shaft **3910**, as illustrated in FIG. **68**. Referring to FIG. **68**, the outer housing of the shaft **3910** comprises a wedge **3919** configured to lift the lock **3929** away from the firing shaft **3930** and disengage the lock **3929** from the lock aperture **3939**. The wedge **3919** is configured such that it does not disengage the lock **3929** from the firing shaft **3930** unless the staple cartridge **3920** has been fully, or sufficiently, seated onto the shaft **3910**, as illustrated in FIG. **68**. FIG. **67** illustrates a scenario where the staple cartridge **3920** has not been fully, or sufficiently, seated onto the shaft **3910**.

Turning now to FIGS. **69-71**, a tool assembly **4000** comprises a shaft **4010** and a replaceable staple cartridge **4020**. The replaceable staple cartridge **4020** comprises a closure drive configured to move an anvil relative to the staple cartridge **4020** and, in addition, a firing drive comprising a rotatable firing shaft **3930** configured to eject staples removably stored in the staple cartridge **4020**. The staple cartridge **4020** comprises a lock **4029** configured to releasably connect the staple cartridge **4020** to the shaft **4010**. The lock **4029** comprises a proximally-extending cantilever and a lock shoulder **4028** extending therefrom. The lock **4029** is configured to deflect inwardly within the shaft **4010** as the staple cartridge **4020** is assembled to the shaft **4010** and then resiliently return to, or at least toward, its undeflected state when the lock shoulder **4028** of the lock **4029** becomes aligned with a window **4019** defined in the outer housing of the shaft **4010**. In such instances, the lock shoulder **4028** enters into the window **4019** when the staple cartridge **4020** has been fully, or sufficiently, seated on the shaft **4010**, as illustrated in FIG. **70**. In order to unlock the staple cartridge **4020**, a clinician can insert a tool or their finger, for example, into the window and depress the lock **4029** away from the window **4019**. At such point, the staple cartridge **4020** can be removed from the shaft **4010** and, if the clinician so desires, and attach a new staple cartridge to the shaft **4010**.

In addition to or in lieu of the above, a surgical stapling system can comprise an electrical lockout configured to prevent the closure drive of the stapling system from clamping the anvil onto the tissue and/or prevent the firing drive from performing its firing stroke when a staple cartridge has not been fully, or sufficiently, seated onto the shaft of the stapling system. In various instances, the stapling system can comprise a sensor configured to detect whether a staple cartridge has been fully, or sufficiently, seated on the shaft and, in addition, an electrical motor configured to operate the firing drive. In the event that the sensor detects that a staple cartridge has not been fully, or sufficiently, attached to the shaft, the motor can be electrically de-activated. In various instances, the stapling system comprises a controller, such as a microprocessor, for example, which is in communication with the sensor and the electric motor. In at least one instance, the controller is configured to, one, permit the electric motor to be operated if the sensor detects a properly seated staple cartridge on the shaft and, two, prevent the electric motor from being operated if the sensor detects an improperly seated staple cartridge on the shaft.

Turning now to FIG. **72**, a tool assembly kit **4100** comprises a shaft **4110** and a plurality of staple cartridges, such as **4120**, **4120'**, **4120"**, and **4120'"**, for example. Each staple cartridge **4120**, **4120'**, **4120"**, and **4120'"** is configured to apply circular rows of staples having a different diameter. For example, the staple cartridge **4120'"** is configured to apply staples in a pattern having a large diameter while the staple cartridge **4120** is configured to apply staples in a pattern having a small diameter. In various instances, different staple cartridges can deploy staples having different unformed heights. In at least one instance, staple cartridges that apply staples in larger patterns deploy staples having a larger undeformed height while staple cartridges that apply staples in smaller patterns deploy staples having a smaller undeformed height. In some instances, a staple cartridge can deploy staples having two or more unformed heights. In any event, a staple cartridge selected from the plurality of staple cartridges can be assembled to the shaft **4110**.

Referring to FIGS. **72** and **73**, the tool assembly **4100** comprises a detection circuit **4190** configured to detect whether a staple cartridge is fully, or sufficiently, attached to the shaft **4110**. The detection circuit **4190** is not entirely contained within the shaft **4110**; rather, a staple cartridge must be properly assembled to the shaft **4110** to complete the detection circuit **4190**. The detection circuit **4190** comprises conductors **4193** that extend through a passage **4192** defined in the frame of the shaft **4110** and/or along the outer housing of the shaft **4110**. Referring primarily to FIG. **73**, each conductor **4193** is electrically coupled to an electrical contact **4194** defined in the distal end of the housing. The staple cartridge **4120**, for example, comprises corresponding electrical contacts **4195** which are positioned and arranged on the body **4122** of the staple cartridge **4120** such that the contacts **4195** engage the contacts **4194** on the shaft **4110**. The staple cartridge **4120** further comprises conductors **4196** extending through and/or along the cartridge body **4122**. Each conductor **4196** is electrically coupled with a contact **4195**. In certain instances, the conductors **4196** are directly coupled to one another and, in such instances, the detection circuit **4190** is closed once the staple cartridge **4120** is properly assembled to the shaft **4110**.

In certain instances, further to the above, the detection circuit **4190** of the tool assembly **4100** extends through a deck portion **4124** of the staple cartridge **4120**. In at least one instance, the deck portion **4124** is movably attached to the cartridge body **4122**. More specifically, in at least one such instance, spring members **4198** are positioned intermediate the cartridge body **4122** and the deck portion **4124** and are configured to permit the deck portion **4124** to move, or float, relative to the cartridge body **4122** when tissue is compressed against the deck portion **4124**. In at least one instance, the spring members **4198** comprise one or more wave springs, for example. The spring members **4198** also form an electrically conductive pathway between the cartridge body **4122** and the deck portion **4124**. More specifically, the spring members **4198** are positioned intermediate electrical contacts **4197** and **4199** defined on the cartridge body **4122** and the deck portion **4124**, respectively. The conductors **4196** are electrically coupled to electrical contacts **4197** defined on the distal end of the cartridge body **4122** and the electrical contacts **4199** are electrically coupled to one another through a conductor in the deck portion **4125**. As discussed above, the detection circuit **4190** is closed once the staple cartridge **4120** is properly assembled to the shaft **4110**.

Turning now to FIGS. **74-76**, a tool assembly **4200** comprises a lockout configured to prevent a replaceable circular staple cartridge from being fired more than once, as described in greater detail further below. In use, a replaceable circular staple cartridge **4220** is assembled to a shaft **4210** of the tool assembly **4200**. The tool assembly **4200** is then positioned in the surgical site and an anvil **2230** is assembled to the trocar **2450** of the closure drive. The

closure drive is then used to move the anvil **2230** toward the staple cartridge **4220** to clamp the patient's tissue against the staple cartridge **4220** until the anvil **2230** reaches a closed, or clamped, position. This position of the anvil **2230** is illustrated in FIG. **74**. At such point, the firing drive can be operated to deploy the staples removably stored in the staple cartridge **4220**. The firing drive comprises, among other things, a rotatable drive shaft **4230** which is threadably engaged with a drive collar **4240** and, in addition, a staple firing driver **2560**. The drive collar **4240** and the firing driver **2560** comprise separate components; however, the drive collar **4240** and the firing driver **2560** could be integrally formed in alternative embodiments. The firing drive is rotatable in a first direction during a firing stroke to push the drive collar **4240** and the staple firing driver **2560** distally between an unfired position (FIG. **74**) and a fired position (FIG. **75**) to eject the staples from the staple cartridge **4220**. The drive collar **4240** and the staple driver **2560** are prevented from rotating within the staple cartridge **4220** and, as a result, the drive shaft **4230** rotates relative to the drive collar **4240** and the staple driver **2560**.

Further to the above, the drive collar **4240** comprises one or more lockouts **4290** extending proximally therefrom. Each lockout **4290** comprises a lockout pin **4292** slidably positioned within a pin aperture **4293** defined in the drive collar **4240**. Each lockout **4290** further comprises a biasing member, such as a spring **4294**, for example, configured to bias the pins **4292** proximally. When the firing drive is in its unfired configuration, as illustrated in FIG. **74**, the lockouts **4290** are not engaged with the rotatable drive shaft **4230** and/or the frame **4222** of the staple cartridge **4220**. As the drive collar **4240** and the staple driver **2560** are pushed distally by the drive shaft **4230**, the lockout pins **4292** move away from the drive shaft **4230**, as illustrated in FIG. **75**. After the firing stroke has been completed and the staples have been sufficiently deformed against the anvil **2230**, the drive shaft **4230** is rotated in an opposite direction to pull the drive collar **4240** and the staple driver **4260** proximally during a retraction stroke. In such instances, the lockouts **4290** are moved toward the drive shaft **4230**. Notably, the retraction stroke is longer than the firing stroke and, as a result, the drive collar **4240** is moved proximally with respect to its original unfired position into a retracted position, as illustrated in FIG. **76**. In this retracted position of the drive collar **4240**, the lockouts **4290** have become engaged with the drive shaft **4230** and the frame **4222** of the staple cartridge **4220**. More specifically, each lockout **4290** has entered into a lockout aperture defined between the drive shaft **4230** and the cartridge frame **4222**. Referring now to FIG. **78**, each lockout aperture is defined by an aperture wall **4295** in the drive shaft **4230** and an aperture wall **4296** in the frame **4222**. Once the lockout pins **4292** have entered the lockout apertures, the drive collar **4240** cannot be rotated by the drive shaft **4230** and the firing system of the staple cartridge **4220** has become locked out. As a result, that particular staple cartridge **4220** cannot be used again and must be replaced with a new staple cartridge in order for the tool assembly **4200** to be used again.

The reader should appreciate, further to the above, that the lockout pins **4292** may or may not be partially positioned in the lockout apertures when the firing drive is in its unfired configuration as illustrated in FIG. **74**. To the extent, however, that the lockout pins **4292** are partially positioned in the lockout apertures, in such instances, the pins **4292** can displace distally within the pin apertures **4293** defined in the drive collar **4240** when the firing drive shaft **4230** is rotated. As the reader should also appreciate, the lockout pins **4292** are seated deeply enough into the lockout apertures defined in the drive shaft **4230** when the drive collar **4240** is moved into its retracted position so as to prevent the pins **4292** from being displaced distally out of the lockout apertures if the firing drive shaft **4230** is rotated in its first direction once again.

Referring again to FIG. **78**, the sidewalls **4295** and **4296** of the lockout apertures are aligned with one another when the drive collar **4240** is in its retracted position. When the drive shaft **4230** is rotated, however, the sidewalls **4295** defined in the drive shaft **4230** will rotate out of alignment with the sidewalls **4296** defined in the cartridge frame **4222**. In some instances, the sidewalls **4295** may momentarily rotate into re-alignment with the sidewalls **4296** as the firing drive **4230** is rotated. In any event, referring now to FIG. **77**, the sidewalls **4295** are not aligned with the sidewalls **4296** when the firing system is in its unfired configuration. As a result, the lockout pins **4292** cannot enter into the lockout apertures when the firing system is in its unfired configuration and the staple cartridge **4220** cannot become unintentionally locked out.

In at least one alternative embodiment, referring now to FIG. **80**, one or more lockout apertures **4295"** can be exclusively defined in a drive shaft **4230"** of a tool assembly **4200"**. In such embodiments, the drive collar **4240** would not be able to rotate relative to the drive shaft **4230"** once the lockout pins **4292** entered into the lockout apertures **4295"**. In effect, the drive collar **4240** and the drive shaft **4230"** would become synchronously locked together, but not necessarily locked to the frame of the tool assembly **4200"**, which would prevent the drive shaft **4230"** from rotating relative to the drive collar **2440** and displacing the drive collar **2440** distally.

In at least one alternative embodiment, referring now to FIG. **79**, each of the firing drive lockouts has a different configuration such that each lockout pin is uniquely indexed with its corresponding lockout aperture. For example, the tool assembly **4200'** comprises a first lockout pin configured to enter a first lockout aperture defined by sidewalls **4295** and **4296** and a second lockout pin configured to enter a second lockout aperture defined by sidewalls **4295'** and **4296'**. The first lockout pin of the tool assembly **4200'**, however, is sized and configured such that it cannot enter into the second lockout aperture and, correspondingly, the second lockout pin is sized and configured such that it cannot enter into the first lockout aperture. Moreover, neither the first lockout pin nor the second lockout pin can enter an aperture formed by a combination of sidewalls **4295** and **4296'** or an aperture formed by a combination of sidewalls **4295'** and **4296**.

As discussed above, a stapling instrument configured to deploy circular rows of staples can comprise an articulation joint. The articulation joint is configured to permit an end effector of the stapling instrument to articulate relative to a shaft of the stapling instrument. Such a stapling instrument can assist a surgeon in positioning the end effector within the rectum and/or colon of a patient. In various embodiments, referring to FIG. **81**, a stapling instrument configured to deploy circular rows of staples, such as stapling instrument **9000**, for example, can be can comprise a contourable or adjustable frame **9010**. The frame **9010** can be configured to be permanently deformed during use. In at least one such embodiment, the frame **9010** is comprised of a malleable metal, such as silver, platinum, palladium, nickel, gold, and/or copper, for example. In certain embodiments, the frame **9010** is comprised of a malleable plastic, for example. In at least one embodiment, the frame is comprised of a

polymer including metal ions bonded with the polymer chains, such as ionic polymer-metal composites (IPMCs), for example. A voltage potential, or potentials, can be applied to the IPMC material in order to defect the shaft in a desired manner. In certain instances, the shaft is contourable along one radius of curvature while, in other instances, the shaft is contourable along more than one radius of curvature. The voltage potential, or potentials, can be modified to contour the shaft while the shaft is within the patient, for example. In certain embodiments, the contourable portion of the frame comprises a plurality of pivotable links In at least one embodiment, the contourable portion of the frame is comprised of a visco-elastic material.

Further to the above, the stapling instrument can further comprise a lock configured to releasably hold the contourable portion of the stapling instrument frame in its contoured configuration. In at least one instance, the stapling instrument frame comprises articulatable frame links and one or more longitudinal tension cables which can pull the frame links proximally and lock the frame links together. In certain instances, each frame link can comprise a longitudinal aperture extending therethrough which is configured to receive a distally movable rod. The rod is sufficiently flexible to pass through the longitudinal apertures, which may not be completely aligned with one another when the contourable portion has been contoured, yet sufficiently rigid to hold the stapling instrument in its contoured configuration.

As discussed herein, a surgical instrument can be comprised of a plurality of modules that are assembled to one another. For instance, in at least one embodiment, a surgical instrument comprises a first module including a handle and a second module including a shaft assembly. The shaft assembly comprises an end effector configured to staple and/or incise the tissue of a patient; however, the shaft assembly can comprise any suitable end effector. In various instances, the end effector comprises a third module attachable to the shaft assembly. Referring now to FIGS. **82** and **83**, a handle, such as the handle **20**, for example, comprises a controller and a display **10000** in communication with the controller. The controller is configured to display data regarding the operation of the surgical instrument on the display **10000**. The data displayed on the display **10000** relates information to a surgeon regarding at least one operating parameter of the first module and/or at least one operating parameter of the second module. For example, the controller can display data on the display **10000** regarding the progress of the staple firing stroke.

Further to the above, the shaft assembly comprises a second display. For example, the shaft assembly **2000** comprises a display **10100**; however, any of the shaft assemblies disclosed herein can comprise a display such as display **10100**, for example. The second module comprises its own controller configured to display data regarding the operation of the surgical instrument on the display **10100** Similar to the above, the data displayed on the display **10100** relates information regarding at least one operating parameter of the first module and/or at least one operating parameter of the second module. The controller of the second module is in signal communication with the controller of the first module; however, in other embodiments, the second module controller can operate independently of the first module controller. In certain alternative embodiments, the second module does not comprise a controller. In such embodiments, the controller of the first module is in signal communication with the first display **10000** and the second display **10100** and controls the data displayed on the first display **10000** and the second display **10100**.

As discussed above, the tool assembly **2000** comprises an anvil and a staple cartridge. The handle **20** comprises an actuation system configured to move the anvil relative to the staple cartridge. The anvil is positionable in a range of positions relative to the staple cartridge to control the distance, or gap, between the anvil and the staple cartridge and, as a result, control the forming height of the staples when the staples are ejected from the staple cartridge. For instance, the anvil is positioned closer to the staple cartridge to deform the staples to a shorter formed height and positioned further away from the staple cartridge to deform the staples to a taller formed height. In any event, the second display **10100** of the tool assembly **2000** is configured to display the position of the anvil relative to the staple cartridge and/or display the height in which the staples will be or have been formed. In various embodiments, a shaft assembly can comprise an actuator configured to control a function of the end effector and a display which displays data regarding the end effector function which is adjacent to the actuator.

Referring to FIG. **1**, a tool assembly **1500** comprises a shaft and an end effector extending from the shaft. The shaft comprises a shaft frame a longitudinal shaft axis. The end effector comprises an end effector frame and a longitudinal end effector axis. The end effector further comprises a distal head and a rotation joint which permits the distal head to rotate relative to the end effector frame about the longitudinal end effector axis. The distal head comprises a first jaw and a second jaw. The first jaw comprises a staple cartridge including staples removably stored therein, or a channel configured to receive such a staple cartridge, and the second jaw comprises an anvil configured to deform the staples. The second jaw is movable relative to the first jaw between an open position and a closed position; however, other embodiments are envisioned in which the first jaw is movable relative to the second jaw and/or both the first jaw and the second jaw are movable relative to each other.

In certain embodiments, a tool assembly can comprise an articulation joint in addition to the rotation joint. In at least one such embodiment, the rotation joint is distal with respect to the articulation joint. In such an embodiment, the rotation of the distal head does not affect the angle in which the end effector has been articulated. That said, other embodiments are envisioned in which the articulation joint is distal with respect to the rotation joint. Such embodiments can provide a wide sweep of the distal head. In either event, the longitudinal end effector axis is movable relative to the longitudinal shaft axis. In at least one instance, the longitudinal end effector axis is movable between a position in which it is collinear with the longitudinal shaft axis to a position in which it is transverse to the longitudinal shaft axis.

Further to the above, the distal head of the tool assembly **1500** is rotatable between an initial position and a rotated position. In at least one instance, the distal head is rotatable between a zero, or top-dead-center, position and a second position. In certain instances, the distal head is rotatable through an at least 360 degree range of motion. In other instances, the distal head is rotatable through a less than 360 degree range of rotation. In either event, the tool assembly **1500** and/or the handle **20** is configured to track the rotational position of the distal head. In various instances, the tool assembly **1500** and/or the handle **20** comprises an electric motor operably coupled with the distal head of the end effector and, in addition, an encoder configured to

directly track the rotation of the distal head and/or indirectly track the rotation of the distal head by evaluating the rotational position of the shaft of the electric motor, for example. The controller of the handle **20** is in signal communication with the encoder and is configured to display the rotational position of the distal head on the display **10000**, for example.

In at least one embodiment, the orientation and the arrangement of the data displayed on the display **10000** is static while the distal head of the end effector rotates. Of course, the data displayed on the display **10000** in such an embodiment would be updated by the surgical instrument controller; however, the data display is not re-oriented and/or re-arranged as the distal head rotates. Such an embodiment can provide a surgeon with the information necessary to properly utilize the surgical instrument in a static field. In at least one alternative embodiment, the data field on the display **10000** is dynamic In this context, the term dynamic means more than the data being updated on the display **10000**; rather, the term dynamic means that the data is re-oriented and/or re-arranged on the display **10000** as the distal head is rotated. In at least one instance, the orientation of the data tracks the orientation of the distal head. For example, if the distal head is rotated **30** degrees, the data field on the display **10000** is rotated 30 degrees. In various instances, the distal head is rotatable 360 degrees and the data field is rotatable 360 degrees.

Further to the above, the data field can be oriented in any orientation that matches the orientation of the distal head. Such an embodiment can provide a surgeon with an accurate and intuitive sense of the orientation of the distal head. In certain embodiments, the controller orients the data field in an orientation selected from an array of discrete positions that most closely matches the orientation of the distal head. For instance, if the distal head has been rotated 27 degrees and the selectable discrete data field positions are 15 degrees apart, the controller can re-orient the data field 30 degrees from a datum orientation. Similarly, for example, if the distal head has been rotated 17 degrees and the selectable discrete data field positions are 5 degrees apart, the controller can re-orient the data field 15 degrees from the datum orientation. In at least one embodiment, the datum orientation is aligned with a feature of the surgical instrument itself. For example, the datum orientation of the handle **20** is aligned with an axis extending through a grip of the handle **20**. In such an embodiment, the controller can disregard the orientation of the handle **20** with respect to its environment. In at least one alternative embodiment, however, the datum orientation is aligned with respect to the gravitational axis, for example.

Further to the above, the controller is configured to re-orient the entire data field displayed on the display **10000** with respect to the orientation of the distal head. In other embodiments, the controller is configured to re-orient only a portion of the data field displaced on the display **10000** with respect to the orientation of the distal head. In such an embodiment, a portion of the data field is held static with respect to the datum orientation while another portion of the data field is rotated with respect to the datum orientation. In certain embodiments, a first portion of the data field is rotated a first angle of rotation and a second portion of the data field is rotated a second angle of rotation in the same direction. For instance, the second portion can be rotated less than the first portion. In various embodiments, a first portion of the data field is rotated in a first direction and a second portion of the data field is rotated in a second, or opposite, direction.

Further to the above, the data field is re-oriented and/or re-arranged in real time, or at least substantially in real time, with the rotation of the distal head. Such an embodiment provides a very responsive data display. In other embodiments, the re-orientation and/or re-arrangement of the data field can lag the rotation of the distal head. Such embodiments can provide a data display with less jitter. In various embodiments, a first portion of the data field is re-oriented and/or re-arranged at a first speed and a second portion of the data field is re-oriented and/or re-arranged at a second, or different, speed. For instance, the second potion can be rotated at a slower speed.

As discussed above, the data field on the display **10000** is rotated as the distal head of the end effector is rotated. However, in other embodiments, the data field, or a portion of the data field, is translated as the distal head is rotated. As also discussed above, the controller of the surgical instrument is configured to re-orient and/or re-arrange the data field on the handle display **10000**. However, the controller of the surgical instrument can re-orient and/or re-arrange the data field on a second display, such as a shaft display, for example.

Referring again to FIGS. **15** and **83**, the tool assembly **2000** comprises an actuator **10200** configured to actuate the articulation drive system of the tool assembly **2000**. The actuator **10200** is rotatable about a longitudinal axis which is parallel to, or at least substantially parallel to, a longitudinal axis of the shaft **2100**, for example. The actuator **10200** is operably coupled to a rheostat, for example, which is in signal communication with a controller of the handle **20**. When the actuator **10200** is rotated in a first direction about its longitudinal axis, the rheostat detects the rotation of the actuator **10200** and the controller operates the electric motor to articulate the end effector **2200** in a first direction. Similarly, when the actuator **10200** is rotated in a second, or opposite, direction about its longitudinal axis, the rheostat detects the rotation of the actuator **10200** and the controller operates the electric motor to articulate the end effector **2200** in a second, or opposite, direction. In various instances, the end effector **2200** can be articulated approximately 30 degrees from a longitudinal axis in a first direction and/or articulated approximately 30 degrees from the longitudinal axis in a second, or opposite, direction, for example.

As the reader should appreciate, further to the above, the tool assembly **2000** does not have an on-board electric motor configured to operate the articulation drive system; rather, the electric motor of the articulation drive system is in the handle, such as handle **20**, for example, to which the tool assembly **2000** is attached. As a result, an actuator on the detachable shaft assembly controls the operation of the handle In other embodiments, the electric motor of the articulation driver system can be in the tool assembly **2000**. In either event, the display **10100** is configured to display, in at least some manner, the articulation of the end effector **2200**. As the reader should appreciate, the display **10100** is adjacent the actuator **10200** and, as a result, the surgeon is able to easily view the input and the output of the articulation drive system at the same time.

A surgical tool assembly comprising a contourable shaft, further to the above, can be advantageously shaped to fit within the rectum or colon of a patient, for example. Such a contourable shaft, however, cannot bear a significant amount of tensile and/or compressive loads. To compensate therefor, in various embodiments, only rotatable drive systems may extend through the contourable portion of the shaft. In such instances, the shaft need only resist the rotational reaction forces generated by the rotatable drive systems. In such

embodiments, the rotational motion of the drive systems can be converted to linear motion, if necessary, distally with respect to the contourable shaft portion. Such longitudinal motions can generate tensile and/or compressive forces; however, such forces can be resolved, or balanced out, within the end effector, i.e., distally with respect to the contourable shaft portion. Such embodiments can also utilize an articulation joint positioned distally with respect to the contourable shaft portion. In such embodiments, the tool assembly may not utilize push-pull drive systems which traverse the contourable shaft portion.

An anvil **6020** of a circular stapling instrument is illustrated in FIGS. **84** and **85**. The anvil **6020** comprises a tissue compression surface **6022** and an annular array of staple forming pockets **6024** defined in the tissue compression surface **6022**. The anvil **6020** further comprises a frame **6028**, an attachment mount **6026**, and a stem extending from the attachment mount **6026**. The stem is configured to be releasably attached to a closure drive of the circular stapling instrument so that the anvil **6020** can be moved toward and away from a staple cartridge of the circular stapling instrument. The compression surface **6022**, the attachment mount **6026**, and the frame **6028** are comprised of stainless steel, for example; however, any suitable material, or materials, could be used.

Further to the above, the anvil **6020** comprises a tissue support **6030**. The tissue support **6030** is positioned within an annular aperture defined within the tissue support surface **6022**. The tissue support **6030** is snugly secured within the anvil **6020** such that there is little, if any, relative movement therebetween. The tissue support **6030** comprises an annular tissue support surface **6032** which is adjacent to the annular tissue compression surface **6022** of the anvil **6020**. The tissue support **6030** further comprises an inner annular wall **6036** defined therein and, in addition, a bottom wall **6038** positioned adjacent the anvil frame **6028** of the anvil **6020**.

Referring now to FIG. **86**, the circular stapling instrument comprises a staple cartridge **6040** including a first annular row of staples **6070**, a second annular row of staples **6080**, and a firing drive configured to eject the staples **6070** and **6080** from the staple cartridge **6040** during a firing stroke of the firing drive. As illustrated in FIG. **86**, the staples **6070** and **6080** are deformed by the forming pockets **6024** as they are ejected from the staple cartridge **6040**. In various instances, the staples **6070** and the staples **6080** are deformed to the same height while, in other instances, the staples **6070** and the staples **6080** are deformed to different heights. For example, the staples **6070** can be deformed to a shorter deformed height than the staples **6080**. In other examples, the staples **6080** are deformed to a shorter height than the staples **6070**.

In addition to or in lieu of the above, the staples **6070** and the staples **6080** can have different unformed heights. For example, the staples **6070** can have a shorter unformed height than the staples **6080**. In other examples, the staples **6080** have a shorter unformed height than the staples **6070**. In certain instances, the staples **6070** and the staples **6080** have the same unformed height.

As the staples **6070** and **6080** are deformed against the anvil **6020** to staple the tissue T captured between the anvil **6020** and the staple cartridge **6040**, further to the above, the stapling instrument can incise the tissue T. The firing drive, which ejects the staples from their staple cavities, drives a cutting member **6050** toward the tissue T and the anvil **6020**. The distal edge of the cutting member **6050** transects the tissue T and then slides along the inner sidewall **6036** of the tissue support **6030** without transecting the inner sidewall **6036**. The cutting edge of the cutting member **6050** is annular and it is aligned with the annular inner wall **6036** of the tissue support **6030**. The cutting member **6050** is advanced into the anvil **6020** until the cutting member **6050** transects the bottom wall **6038**, as illustrated in FIG. **86**.

The firing drive experiences various loads when driving the staples **6070** and **6080** against the anvil **6020** and/or cutting the tissue. For instance, the firing drive may experience an increased load when transecting tissue that has been previously stapled, such as with staples **6090** (FIG. **86**), for example. The transection of the bottom wall **6038** by the cutting member **6050**, however, creates a sudden change or impulse in the force transmitted through the firing drive. This sudden change by the force can be sensed by the clinician using the surgical stapler and/or an electronic sensor system configured to detect load changes in the firing drive. The tissue support **6030** can be comprised of a material that can snap when the cutting member **6050** applies a load to the bottom wall **6038**. In at least one instance, the tissue support **6030** is comprised of plastic, for example. In any event, the transection of the bottom wall **6038** can be detected and, once detected, the clinician and/or the electronic sensor system can determine that the cutting process has been completed.

The firing drive deforms the staples **6070**, **6080** and incises the tissue with the cutting member **6050** at the same time; however, it is contemplated that the staple forming and tissue cutting steps could be staggered. In at least one instance, the tissue cutting step does not begin until the staple forming step has been completed.

It should be appreciated from FIG. **86** that, while surface **6032** can partially support the tissue T, the cutting member **6050** can push the tissue T into the cavity defined between the inner wall **6036** of the tissue support **6030** and the attachment mount **6026** when the cutting member **6050** is moved toward the bottom wall **6038**. Stated another way, the cutting member **6050** can drag the tissue T along the wall **6036** before finally cutting it. In such instances, the incision made by the cutting member **6050** may not be precise. Discussed below are improvements to the embodiment disclosed in FIG. **86**.

Turning now to FIGS. **87** and **88**, the tissue support **6030** of anvil **6020** has been replaced with a tissue support **6130**. The tissue support **6130** comprises a first, or outer, annular wall **6131** and a second, or inner, annular wall **6133**. The inner wall **6133** defines an aperture **6136** configured to closely receive the attachment mount **6026**. The outer wall **6131** and the inner wall **6133** are connected by lateral walls **6132**. The lateral walls **6132** extend radially around a center of the tissue support **6130** between the inner wall **6133** and the outer wall **6131**. The lateral walls **6132** are evenly spaced apart from one another; however, alternative embodiments are contemplated in which the lateral walls **6132** are not evenly spaced apart from one another. In either event, the lateral walls **6132** define an annular array of cavities **6134** in the tissue support **6130**. In various instances, each cavity **6134** can be enclosed on every side but the side facing the tissue, for example. In other instances, the side of the cavity facing the tissue can be enclosed.

The outer wall **6131** and the inner wall **6133** of the tissue support **6130** are configured to support the tissue as the tissue is being transected by the cutting member **6050**. The lateral walls **6132** also support the tissue and, in addition, block or resist the tissue from sliding relative to the outer wall **6131** and the inner wall **6133** as the tissue is being transected. It should be understood that the tissue can enter the cavities **6134** when the tissue is being transected; how-

ever, the relative movement between the tissue and the sidewalls can be greatly reduced. The composition and arrangement of the lateral walls **6132** can be selected to provide more support to the tissue or less support to the tissue depending on the amount of support that is desired. For instance, thicker lateral walls **6132** can provide more tissue support than thinner lateral walls **6132**. Similarly, more lateral walls **6132** can provide more tissue support than thinner lateral walls **6132**.

As the cutting member **6050** is moved through its cutting stroke, the cutting member **6050** cuts the tissue and transects the lateral walls **6132**. The cutting member **6050** is annular and transects the lateral walls **6132** adjacent the outer wall **6131**; however, a cutting member could transect the walls **6132** at any suitable location. In any event, the lateral walls **6132** support the tissue before, during, and after the tissue is cut and prevent, or at least reduce the possibility of, the tissue being dragged along the outer wall **6131** and/or the inner wall **6133** Similar to the tissue support **6030**, the tissue support **6130** comprises a bottom wall **6138** that is transected at the end of the cutting stroke.

A surgical stapler comprising a staple cartridge **6240** and an anvil **6220** is disclosed in FIGS. **89** and **90**. The staple cartridge **6240** is similar to the staple cartridge **6040** in many respects. The anvil **6220** is similar to the anvil **6020** and the anvil **6120** in many respects. The anvil **6220** comprises an attachment stem **6226** and an annular tissue support **6230** positioned around the attachment stem **6226**. The tissue support **6230** comprises a central aperture configured to closely receive the stem **6226**. The tissue support **6230** further comprises an annular outer wall **6231** positioned adjacent the tissue compression surface of the anvil **6220** and, in addition, lateral walls **6232** extending radially from the outer wall **6231**. The tissue support **6230** does not comprise an inner annual wall and the inner ends of the lateral walls **6232** are free to deflect. The tissue support **6230** further comprises a bottom wall **6238** which is incised by the cutting member **6050**, similar to the above.

A surgical stapler comprising the staple cartridge **6240** and the anvil **6220** is illustrated in FIGS. **91** and **92**. The reader should appreciate, however, that the tissue support **6230** of the anvil **6220** has been replaced with a tissue support **6330**. The tissue support **6330** comprises an annular central aperture configured to closely receive the stem **6226**. The tissue support **6330** further comprises a top wall **6332**, a bottom wall **6338**, and sidewalls **6336** extending between the top wall **6332** and the bottom wall **6338**. The top wall **6332** and the bottom wall **6338** are parallel, or at least substantial parallel; however, embodiments are envisioned in which the walls **6332** and **6338** are not parallel. The sidewalls **6336** are parallel, or at least substantial parallel; however, embodiments are envisioned in which the sidewalls **6336** are not parallel.

The walls **6332**, **6336**, and **6338** define an annular cavity **6334** therebetween. The cavity **6334** is enclosed, or at least substantially enclosed, on all sides. The cavity **6334** extends uninterrupted around the stem **6226**; however, other embodiments are envisioned in which the cavity **6334** is interrupted by sidewalls and/or changes in geometry, for example.

Similar to the above, the tissue support **6330** is configured to support the tissue as the tissue is being transected by the cutting member **6050**. The tissue support **6330** is closely received within the anvil **6220** such that the tissue support **6330** does not move, or at least substantially move, relative to the anvil **6220**. Moreover, the tissue support **6330** comprises a rigid box-shaped cross-section such that the deflection of the tissue support **6330** is minimized or insubstantial while the cutting member **6050** is transecting the tissue. As illustrated in FIG. **91**, a gap is present between the bottom wall **6338** and the inner side wall **6336**. Such a gap can provide some flexibility in the tissue support **6330**; however, other embodiments are envisioned in which no such gaps are present. The tissue support **6330** is comprised of plastic, for example; however, in various embodiments, the tissue support **6330** can be comprised of a flexible and/or elastomeric material, for example.

The cutting member **6050** transects the tissue support **6330** during its cutting stroke. As illustrated in FIG. **92**, the cutting member **6050** transects the top wall **6332** after transecting the tissue and then enters into the cavity **6334**. The top wall **6332** comprises an annular notch **6333** defined therein which is aligned with the annular cutting edge of the cutting member **6050**. The notch **6333** reduces the cross-section of the top wall **6332** and facilitates the incision of the top wall **6332**. The cutting member **6050** can also transect the bottom wall **6338** during its cutting stroke. As the reader should appreciate, the transection of the top wall **6332** and the bottom wall **6338** of the tissue support **6330** can create force pulses in the firing drive of the stapling instrument. The top wall **6332** and the bottom wall **6338** can be structurally configured to provide different pulses so that the clinician and/or electronic sensor system of the surgical instrument can discern the difference between the pulses and not incorrectly interpret the incision of the top wall **6332** as the end of the firing/cutting stroke.

Referring again to FIGS. **91** and **92**, the top wall **6332** of the tissue support **6330** is aligned, or at least substantially aligned, with the tissue compression surface **6022** of the anvil **6220**. In addition to or in lieu of the above, the top wall **6332** can be recessed with respect to the tissue compression surface **6022** and/or extend above the tissue compression surface **6022**. The top wall **6332** of the tissue support extends above the forming surfaces **6024** of the anvil **6220**. In addition to or in lieu of the above, the top wall **6332** can be recessed with respect to the forming surfaces **6024** and/or aligned with the forming surfaces **6024**.

A surgical stapler comprising the staple cartridge **6240** and the anvil **6220** is illustrated in FIGS. **93** and **94**. The reader should appreciate, however, that the tissue support **6230** of the anvil **6220** has been replaced with a tissue support **6430**. The tissue support **6430** comprises an annular central aperture configured to closely receive the stem **6226**. The tissue support **6430** further comprises a top wall **6432**, a bottom wall **6438**, and sidewalls **6436** extending between the top wall **6432** and the bottom wall **6438**. The walls **6432**, **6436**, and **6438** define an annular cavity **6434** therebetween. The cavity **6434** is enclosed, or at least substantially enclosed, on all sides. The cavity **6434** extends uninterrupted around the stem **6226**; however, other embodiments are envisioned in which the cavity **6434** is interrupted by sidewalls and/or changes in geometry, for example.

Similar to the above, the tissue support **6430** is configured to support the tissue as the tissue is being transected by the cutting member **6050**. The tissue support **6430** is closely received within the anvil **6220** such that the tissue support **6430** does not move, or at least substantially move, relative to the anvil **6220**. Moreover, the tissue support **6430** comprises a rigid polygonal cross-section such that the deflection of the tissue support **6430** is minimized or insubstantial while the cutting member **6050** is transecting the tissue. As illustrated in FIG. **93**, a gap is present between the bottom wall **6438** and the inner side wall **6436**. Such a gap can provide some flexibility in the tissue support **6430**; however, other embodiments are envisioned in which no such gaps are

present. The tissue support **6430** is comprised of plastic, for example; however, in various embodiments, the tissue support **6430** can be comprised of a flexible and/or elastomeric material, for example.

As illustrated in FIGS. **93** and **94**, the inner sidewall **6436** is shorter than the outer sidewall **3436**; however, other embodiments are envisioned in which the outer sidewall **6436** is shorter than the inner sidewall **6436**. Moreover, the top wall **6432** is not parallel to the bottom wall **6438**. More specifically, the top wall **6432** comprises an inclined portion which extends transversely to the bottom wall **6438** and/or other portions of the top wall **6432**.

The cutting member **6050** transects the tissue support **6430** during its cutting stroke. As illustrated in FIG. **94**, the cutting member **6050** transects the top wall **6432** after transecting the tissue and then enters into the cavity **6434**. The cutting member **6050** can also transect the bottom wall **6438** during its cutting stroke.

As discussed above, the tissue supports disclosed herein are configured to support tissue as the tissue is being incised by a cutting member. Oftentimes, the tissue being incised by the cutting member has been previously stapled, i.e., stapled during an earlier step in the surgical procedure, for example. In various instances, such staples may also be incised by the cutting member even though they are comprised of metal, such as titanium and/or stainless steel, for example. In other instances, such staples may not be incised by the cutting member; rather, they may be pushed into the material comprising the tissue support. Whether or not the staples are incised by the cutting member, the tissue supports disclosed herein, in various instances, comprise a sufficient strength and/or stiffness that prevents a staple trapped against the tissue support by the cutting member from creating more than localized plastic deformation in the tissue support. In at least one such instance, the localized plastic deformation is limited to less than one characteristic length (CL) of the staple in any direction with respect to the staple. In at least one instance, the material of the tissue support can be selected such that the staple trapped against the tissue support may only create a zone of plastic deformation in the tissue support that has a diameter of less than 2*CL, for example. In other instances, the material of the tissue support can be selected such that the staple trapped against the tissue support may only create a zone of plastic deformation in the tissue support that has a diameter of less than 1.5*CL, for example. A characteristic length of a staple can be the width of the staple crown, or backspan, and/or the formed height of the staple legs in their deformed configuration, for example. Moreover, the tissue supports disclosed herein can be comprised of a material which is sufficiently hard enough to support the staples as they are being incised by the cutting member. In at least one instance, the hardness of the material comprising the tissue support is equal to or greater than the hardness of the material comprising the staples being incised against the tissue support. In certain instances, the hardness of the material comprising the tissue support is less than the hardness of the material comprising the staples being incised; however, the structural design of the tissue support is sufficient to prevent the tissue support from plastically stretching beyond an acceptable zone of plastic deformation. In certain instances, the energy needed to incise the tissue and the formed staples in the tissue is less than the energy needed to incise the tissue support. In various instances, the material comprising the tissue support may be resistant to being gouged by the staples. In at least one instance, a biocompatible lubricant may be placed on and/or impregnated within the tissue support to prevent the staples from catching on the tissue support.

In various instances, the tissue compression surface of an anvil and the tissue contacting surface of a tissue support are flat, or at least substantially flat. Such an arrangement can distribute the force applied by the anvil onto the tissue over a large area. Other embodiments are envisioned in which the tissue compression surface of the anvil and/or the tissue contacting surface of the tissue support are not flat. In certain instances, the tissue compression surface of an anvil and/or the tissue contacting surface of a tissue support comprise tissue gripping members, or spikes, extending therefrom which are configured to engage and grip tissue. Such tissue gripping members can reduce relative movement, or slipping, between the tissue and the anvil, for example. In at least one instance, the density of the tissue gripping members on the tissue compression surface of the anvil and the tissue contacting surface of the tissue support is the same. In other instances, the density of the tissue gripping members on the tissue contacting surface of the tissue support is higher than the density of the tissue gripping members on the compression surface of the anvil. As the tissue support is positioned radially inwardly with respect to the compression surface of the anvil, the tissue gripping members can prevent the tissue from flowing or sliding radially inwardly in such an instance.

An anvil **6520** is disclosed in FIG. **95**. The anvil **6520** comprises a tissue compression surface **6522** and, in addition, forming pockets defined in the tissue compression surface **6522** which are configured to deform staples into a desired configuration when the staples are ejected from their staple cartridge. Each forming pocket comprises a pair of cups, wherein each pair of cups is configured to deform the legs of a staple. For example, a pair of forming cups can include a first forming cup **6530***a* configured to deform the first leg of a staple and a second forming cup **6530***b* configured to deform the second leg of the staple. The first forming cup **6530***a* and the second forming cup **6530***b* are mirror images of one another with respect an axis **6531** extending between the first forming cup **6530***a* and the second forming cup **6530***b*; however, other arrangements can be utilized.

The first forming cup **6530***a* comprises a first, or outer, end **6532** and a second, or inner, end **6534**. The first forming cup **6530***a* further comprises a bottom, or bathtub, surface **6536** extending between the outer end **6532** and the inner end **6534**. The first end **6532** is configured to receive the leg of a staple and begin the forming process of the leg. The first end **6532** comprises a curved surface configured to deflect the staple leg toward the second end **6534**. The bottom surface **6536** comprises a curved, or concave, surface configured to at least partially turn the staple leg back toward the staple cartridge. The second end **6534** comprises a curved surface which is configured to guide the staple leg out of the forming cup **6530***a*.

The second forming cup **6530***b* comprises a similar construction to that of the first forming cup **6530***a* and is configured to deform a second leg of the staple. As a result of the above, the first forming cup **6530***a* guides the first leg of the staple toward the second leg and the second forming cup **6530***b* guides the second leg of the staple toward the first leg. In various instances, the first forming cup **6530***a* and the second forming cup **6530***b* co-operate to deform the staple into a B-shaped configuration, for example; however, the forming cups can be configured to deform a staple into any suitable configuration.

Referring primarily to FIG. **96**, each forming cup **6530** (**6530***a* and **6530***b*) comprises a first lateral sidewall **6537** and a second lateral sidewall **6539** extending between the first end **6532** and the second end **6534**. In various instances, the first lateral sidewall **6537** and the second lateral sidewall **6539** are mirror images of one another with respect to a longitudinal axis **6533** extending through the center of the forming cup **6530**. In other instances, the first lateral sidewall **6537** and the second lateral sidewall **6539** are not mirror images of each other. In either event, the sidewalls **6537**, **6539** are sloped or inclined so as to guide the staple leg toward the center of the forming cup, i.e., toward the axis **6533**, for example.

Each forming cup **6530** comprises a groove or channel **6538** defined in the bottom surface **6536** thereof. The groove **6538** extends longitudinally between the first end **6532** and the second end **6534** of the forming cup **6530**. The groove **6538** extends parallel to, and laterally offset with respect to, a central longitudinal axis **6535** of the forming cup **6530**. The groove **6538** is wider than the leg of the staple that is deformed by the forming cup **6530**; however, other embodiments are envisioned in which the groove **6538** is narrower than the leg of the staple. In either event, the groove **6538** is configured to guide the staple leg along a predetermined path within the forming cup **6530**.

In various instances, the grooves of the forming cups **6530** are configured to twist the legs of the staple while the legs are being deformed. In at least one instance, a staple is planar, or at least substantially planar, before it is deformed. In at least one such instance, the legs and the base of the staple lie in the same plane which is aligned with the longitudinal axis **6535** when the staple is ejected from the staple cartridge. The first ends **6532** and the bottom surfaces **6536** are sloped and/or otherwise configured to guide the legs toward the grooves **6538** when the staple legs enter into the forming cups **6530**. Once the staple legs enter into the grooves **6538**, the grooves **6538** will twist the staple legs out of plane with the base of the staple. As a result of the above, the unformed staple configuration is planar but the formed staple configuration is non-planar. Other embodiments are envisioned, however, in which a staple has a non-planar configuration before and after it has been deformed.

The grooves **6538** of the forming cups **6530**, for a given set of forming cups **6530**, are positioned on the same side of the longitudinal axis **6535** and are configured to twist both of the staple legs to the same side of the staple base. Other embodiments, however, are envisioned in which a first staple leg is twisted to one side of the staple base and a second staple leg is twisted to another side of the staple base. In at least one such embodiment, a first groove **6538** is positioned on a first side of the longitudinal axis **6535** that is configured to twist a first staple leg to a first side of the staple base while a second groove **6538** is positioned on a second side of the longitudinal axis **6535** that is configured to twist a second staple leg to a second side of the staple base.

The grooves **6538** of the forming cups **6530**, for a given set of forming cups **6530**, are collinear, or at least substantially collinear. Other embodiments, however, are envisioned in which the grooves **6538** are positioned on the same side of the longitudinal axis **6535** but are not collinear with each other. In at least one such instance, the grooves **6538** are parallel to each other while, in other such instances, the grooves **6538** are not parallel to each other.

Referring primarily to FIG. **96**, the groove **6538** is deeper than the bottom surface **6536** of the forming cup **6530**. Other embodiments, however, are envisioned in which the groove and the bottom surface of a forming cup have the same depth.

In various instances, the forming cups **6530** are arranged in longitudinal rows when the anvil **6520** is part of a longitudinal end effector configured to apply longitudinal rows of staples. In at least one such instance, the grooves **6538** of the forming cups are arranged such all of the staples deployed by the end effector are bent out of plane in the same direction. In other instances, the grooves **6538** are arranged in a first longitudinal row of forming cups **6530** to bend the staple legs in a first direction and a second longitudinal row of forming cups **6530** to bend the staple legs in a second, or different, direction. In certain instances, the grooves **6538** are arranged to bend the legs of a first staple in a staple row in a first direction and a second staple in the staple row in a second, or opposite, direction.

In various instances, the forming cups **6530** are arranged in annular rows when the anvil **6520** is part of an annular end effector configured to apply annular rows of staples. In at least one such instance, the grooves **6538** are positioned radially outwardly with respect to the center longitudinal axes **6535** of the forming cups **6530**. In other instances, the groove **6538** are positioned radially inwardly with respect to the center longitudinal axes **6535** of the forming cups **6530**. In certain instances, the grooves **6538** are positioned radially outwardly in a first annular row of forming cups **6530** and radially inwardly in a second annular row of forming cups **6530**.

Further to the above, the forming pockets of an anvil can comprise any suitable configuration. In at least one instance, a forming pocket can comprise two forming cups which are mirror images of each other with respect to a central axis. Each forming cup comprises a triangular configuration having an outer end and an inner end. The inner ends of a pair of forming cups are adjacent to each other. The outer ends of the forming cups are wider than the inner ends and are configured to receive the legs of a staple. Each forming cup further comprises a bottom, or bathtub, surface extending between the outer end and the inner end and, in addition, a longitudinal groove defined in the bottom surface configured to guide the staple leg within the forming cup. In at least one instance, the longitudinal groove is centered in the bottom surface of the forming cup.

An end effector **7000** of a circular stapling assembly is disclosed in FIGS. **97-99**. The end effector **7000** comprises a staple cartridge including a deck **7030** and a cartridge body **7040**. The deck **7030** comprises a tissue compression surface **7031** and staple cavities **7032** defined in the compression surface **7031**. The staple cavities **7032** are arranged in a first, or inner, annular row and a second, or outer, annular row. Each staple cavity **7032** in the inner row comprises a first staple **7070***a* removably stored therein and each staple cavity **7032** in the outer row comprises a second staple **7070***b* removably stored therein.

The end effector **7000** further comprises staple drivers which are configured to push the staples out of the staple cartridge. For instance, the staple cartridge comprises a first annular row of staple drivers **7060***a* configured to eject the first row of staples **7070***a* and a second annular row of staple drivers **7060***b* configured to eject the second row of staples **7070***b* cartridge body **7040**. The staple drivers **7060***a* and **7060***b* are positioned within and/or aligned with the staple cavities **7032** defined in the deck **7030**. The staple drivers **7060***a* and **7060***b* are slidable within the staple cavities **7032** to eject the staples **7070***a* and **7070***b*, respectively, from the staple cavities **7032**.

The end effector **7000** further comprises an anvil **7020**. The anvil **7020** comprises a tissue compression surface **7021** and staple forming pockets **7022** defined in the compression surface **7021**. The staple forming pockets **7022** are arranged in a first, or inner, annular row and a second, or outer, annular row. The staple forming pockets **7022** are aligned with the staple cavities **7032** such that the staples **7070***a*, **7070***b* contact the staple forming pockets **7022** when the staples **7070***a*, **7070***b* are ejected from the staple cavities **7032**.

The end effector **7000** further comprises a firing member **7056** configured to lift the staple drivers **7060***a* and **7060***b* within the staple cavities **7032** to eject the staples **7070***a* and **7070***b*, respectively, from the staple cavities **7032**. The firing member **7056** comprises a base **7054** and a ramp **7055**. The base **7054** is slidably positioned within a recess **7052** defined in a firing drive **7050**. The ramp **7055** is slidably positioned within a slot **7041** defined in the cartridge body **7040**. As described in greater detail below, the ramp **7055** is configured to slide within the slot **7041** and progressively contact the staple drivers **7060***a*, **7060***b* to eject the staples **7070***a*, **7070***b* from the staple cavities **7032**.

Further to the above, the firing member **7056** is movable through a firing stroke to eject the staples **7070***a*, **7070***b* from the staple cavities **7032**. During the firing stroke, the firing member **7056** is moved along a curved, or arcuate, path which is defined by the slot **7041**. Referring primarily to FIG. **97**, the slot **7041** comprises a first end **7042** and a second end **7049** and a continuous path therebetween. The ramp **7055** of the firing member **7056** is positioned in the first end **7042** at the beginning of the firing stroke and the second end **7049** at the end of the firing stroke. The first end **7042** of the slot **7041** is aligned with the inner row of staple cavities **7032** and the second end **7049** of the slot **7041** is aligned with the outer row of staple cavities **7032**. The slot **7041** further comprises a first circumferential portion **7043** that extends around a central longitudinal axis **7090** extending through the end effector **7000**. The first circumferential portion **7043** of the slot **7041** is aligned with and extends under the staple drivers **7060***a* in the inner row of staple cavities **7032**. The ramp **7055** of the firing member sequentially engages the staple drivers **7060***a* to sequentially fire the staples **7070***a* as the firing member **7056** moves through the first circumferential portion **7043** of the slot **7041**.

The first circumferential portion **7043** is defined by a constant, or at least substantially constant, radius of curvature about the longitudinal axis **7090**; however, other embodiments are envisioned in which the radius of curvature of the first circumferential portion **7043** is not constant. In at least one such instance, the first circumferential portion **7043** comprises a spiral. Stated another way, in such an instance, the first circumferential portion **7043** recedes away from the longitudinal axis **7090** as it extends around the longitudinal axis **7090**.

The second circumferential portion **7045** of the slot **7041** is aligned with and extends under the staple drivers **7060***b* in the outer row of staple cavities **7032**. The ramp **7055** of the firing member sequentially engages the staple drivers **7060***b* to sequentially fire the staples **7070***b* as the firing member **7056** moves through the second circumferential portion **7045** of the slot **7041**. The second circumferential portion **7045** is defined by a constant, or at least substantially constant, radius of curvature about the longitudinal axis **7090**; however, other embodiments are envisioned in which the radius of curvature of the second circumferential portion **7045** is not constant. In at least one such instance, the second circumferential portion **7045** comprises a spiral. Stated another way, in such an instance, the second circumferential portion **7045** recedes away from the longitudinal axis **7090** as it extends around the longitudinal axis **7090**.

Further to the above, the slot **7041** comprises a transition portion **7044** intermediate the first circumferential portion **7043** and the second circumferential portion **7045**. During the firing stroke, the ramp **7055** slides sequentially through the first circumferential portion **7043**, the transition portion **7044**, and then the second circumferential portion **7045**. The transition portion **7044** permits the firing member **7056** to shift between the first radius of curvature of the first staple row and the second radius of curvature of the second staple row. In certain embodiments, a transition portion **7044** between the first circumferential portion **7043** and the second circumferential portion **7045** may be unnecessary. In at least one such instance, the first circumferential portion **7043** can comprise a first spiral configuration and the second circumferential portion **7045** can comprise a second spiral configuration which is aligned such that the end of the first spiral configuration is aligned with the beginning of the second spiral configuration, for example.

The firing member **7056** is driven along its firing path by a firing drive **7050**. The firing drive **7050** is driven about the longitudinal axis **7090** by a handcrank and/or electric motor, for example. The firing drive **7050** comprises a drive recess **7052** defined therein. The base **7054** of the firing member **7056** is positioned in the drive recess **7052**. The drive recess **7052** is larger than the base **7054** of the firing member **7056** such that the base **7054** can move, or float, within the drive recess **7052**. The drive recess **7052** is defined by sidewalls which limit the movement of the base **7054** within the recess **7052**. When the firing drive **7050** is rotated about the longitudinal axis **7090**, a sidewall of the drive recess **7052** contacts the base **7054** and pushes the drive member **7056** through the slot **7051**. As discussed above, the slot **7051** has one or more changes in its radius of curvature and, when the firing member **7056** moves through such changes, the base **7054** of the firing member **7056** can slide within the drive recess.

As described above, the staples in the first, or inner, row of staples are deployed sequentially and, then, the staples in the second, or outer, row of staples are deployed sequentially. Such an embodiment can control the inner periphery of the colon before stapling outwardly, for example. In other embodiments, the staples in the outer row of staples are deployed sequentially and, then, the staples in the inner row of staples are deployed sequentially Such an embodiment can establish a boundary in the colon tissue before stapling inwardly, for example.

In various instances, further to the above, the first staples **7070***a* and the second staples **7070***b* have the same unformed height. In at least one such instance, the first staples **7070***a* and the second staples **7070***b* are formed to the same formed height. In other such instances, the first staples **7070***a* are formed to a first formed height and the second staples **7070***b* can be formed to a second formed height which is different than the first formed height. In at least one such instance, the first formed height of the inner row of staples is shorter than the second formed height of the outer row of staples. Such an arrangement can provide for a more gradual transition between the stapled tissue and the unstapled tissue, for example. In other instances, the first formed height of the inner row of staples is taller than the second formed height of the outer row of staples. Such an arrangement can allow the innermost tissue of a stapled bowel, for example, to be more flexible, for example.

In certain instances, further to the above, the first staples **7070***a* have a first unformed height and the second staples **7070***b* have a second unformed height which is different than the first unformed height. In at least one such instance, the first staples **7070***a* and the second staples **7070***b* are formed to the same formed height. In other such instances, the first staples **7070***a* are formed to a first formed height and the second staples **7070***b* are formed to a second formed height which is different than the first formed height.

The end effector **7000** has two annular rows of staples; however, an end effector can have any suitable number of annular staple rows. For example, an end effector can have three annular rows of staples. In at least one such instance, the staples in a first annular row can have a first unformed staple height, the staples in a second annular row can have a second unformed staple height, and the third staples in a third annular row can have a third unformed staple height. Moreover, in at least one such instance, the staples in a first annular row can have a first deformed staple height, the staples in a second annular row can have a second deformed staple height, and the third staples in a third annular row can have a third deformed staple height.

A firing drive **7150** is depicted in FIGS. **100-105**. The firing drive **7150** comprises a rotatable drive shaft **7152** that is rotatable about a longitudinal axis. The firing drive **7150** further comprises a three-stage sequential driver assembly comprising a first, or inner, driver **7154***a*, a second, or intermediate, driver **7154***b*, and a third, or outer, driver **7154***c*. The drive shaft **7152** comprises a drive pin **7151** extending therefrom. The drive pin **7151** extends through a drive slot in each of the drivers **7154***a*, **7154***b*, and **7154***c*. For instance, the first driver **7154***a* comprises a first drive slot **7153***a* defined therein, the second driver **7154***b* comprises a second drive slot **7153***b* defined therein, and the third driver **7154***c* comprises a third drive slot **7153***c* defined therein. The drive slots **7153***a*, **7153***b*, and **7153***c* do not have the same configuration; however, the drive slots **7153***a*, **7153***b*, and **7153***c* have overlapping configurations that are aligned, or at least substantially aligned, with each other at the drive pin **7151**. For instance, the drive pin **7151** is in an unfired position in FIG. **100** and the drive slots **7153***a*, **7153***b*, and **7153***c* are aligned with the drive pin **7151**.

Further to the above, FIG. **100** illustrates drivers **7154***a*, **7154***b*, and **7154***c* in an unfired position. When the drive shaft **7152** is rotated through a first portion of its firing stroke, referring now to FIG. **101**, the drive pin **7151** is rotated through a circumferential path where the drive pin **7151** engages a sidewall of the drive slot **7153***a* and pushes, or cams, the first driver **7154***a* distally. Notably, the drive pin **7151** has not driven the drivers **7154***b* and **7154***c* distally during the first portion of the firing stroke. As can be seen in FIG. **100**, the drive slots **7153***b* and **7153***c* are aligned with the circumferential path of the drive pin **7151** throughout the first portion of the firing stroke. The first driver **7154***a* is configured to fire a first annular row of staples when the first driver **7154***a* is displaced distally.

When the drive shaft **7152** is rotated through a second portion of its firing stroke, referring now to FIG. **102**, the drive pin **7151** is rotated through a circumferential path where the drive pin **7151** engages a sidewall of the drive slot **7153***b* and pushes, or cams, the second driver **7154***b* distally. Notably, the drive pin **7151** has not driven the driver **7154***c* distally during the second portion of the firing stroke Similar to the above, the drive slots **7153***a* and **7153***c* are aligned with the circumferential path of the drive pin **7151** throughout the second portion of the firing stroke. The second driver **7154***b* is configured to fire a second annular row of staples when the second driver **7154***b* is displaced distally.

When the drive shaft **7152** is rotated through a third portion of its firing stroke, referring now to FIG. **103**, the drive pin **7151** is rotated through a circumferential path where the drive pin **7151** engages a sidewall of the drive slot **7153***c* and pushes, or cams, the third driver **7154***c* distally Similar to the above, the drive slots **7153***a* and **7153***b* are aligned with the circumferential path of the drive pin **7151** throughout the third portion of the firing stroke. The third driver **7154***c* is configured to deploy a cutting member when the third driver **7154***c* is displaced distally; however, in certain embodiments, the third driver **7154***c* can deploy a third row of staples, for example.

As a result of the above, there is no overlap between the first staple firing stage, the second staple firing stage, and the tissue cutting stage. They are timed sequentially. Accordingly, the forces required to deform the staples and cut the tissue are spread out throughout the firing stroke. Moreover, the firing drive **7150** cannot cut the tissue until the tissue has been stapled. Various alternative embodiments are envisioned in which there is some overlap between the first staple firing stage, the second staple firing stage, and/or the tissue cutting stage. In at least one such embodiment, the configurations of the drive slots **7153***a*, **7153***b*, and **7153***c* can be adapted such that there is a partial overlap in the movement of the first driver **7154***a* and the second driver **7154***b* and/or a partial overlap in the movement of the second driver **7154***b* and the third driver **7154***c*.

Referring primarily to FIGS. **103** and **104**, the drivers **7154***a*, **7154***b*, and **7154***c* comprise co-operating features which prevent, or at least inhibit, the drivers **7154***a*, **7154***b*, and **7154***c* from rotating relative to one another. For instance, the first driver **7154***a* comprises a longitudinal key **7155***a* positioned in a longitudinal slot **7156***b* defined in the second driver **7154***b*. The key **7155***a* and the slot **7156***b* are configured to permit the first driver **7154***a* to slide longitudinally relative to the second driver **7154***b* but block rotational movement between the first driver **7154***a* and the second driver **7154***b*. Similarly, the second driver **7154***b* comprises a longitudinal key **7155***b* positioned in a longitudinal slot **7156***c* defined in the third driver **7154***c*. The key **7155***b* and the slot **7156***c* are configured to permit the second driver **7154***b* to slide longitudinally relative to the third driver **7154***c* but block rotational movement between the second driver **7154***b* and the third driver **7154***c*.

In order to retract the drivers **7154***a*, **7154***b*, and **7154***c*, the drive shaft **7152** is rotated in an opposite direction. In such instances, the drive shaft **7152** sequentially engages a sidewall of the drive slot **7153***c*, a sidewall of the drive slot **7153***b*, and then a sidewall of the drive slot **7153***a* to return the third driver **7154***c*, the second driver **7154***b*, and the first driver **7154***a* back to their unfired positions (FIG. **100**).

A firing drive **7250** is illustrated in FIG. **106**. The firing drive **7250** operates in a similar manner to that of the firing drive **7150**. The firing drive **7250** comprises a drive shaft **7252** which is rotatable about a longitudinal axis. The drive shaft **7252** comprises a cam surface, or ramp, **7256** which is rotated through several stages of a firing stroke. The firing drive **7250** further comprises a first driver **7254***a*, a second driver **7254***b*, and a third driver **7254***c* which are engaged by the cam **7256** of the drive shaft **7252** when the firing drive **7250** is rotated. In the first stage of the firing stroke, the cam **7256** engages a cam surface **7255***a* defined on the first driver **7254***a* and drives the first driver **7254***a* distally. In the second stage of the firing stroke, the cam **7256** engages a cam surface **7255***b* defined on the second driver **7254***b* and

drives the second driver **7254***b* distally and, in the third stage of the firing stroke, the cam **7256** engages a cam surface **7255***c* defined on the third driver **7254***c* and drives the third driver **7254***c* distally.

The first cam surface **7255***a* is shorter than the second cam surface **7255***b* and, as a result, the first driver **7254***a* has a shorter firing stroke than the second driver **7254***b*. Similarly, the second cam surface **7255***b* is shorter than the third cam surface **7255***c* and, as a result, the second driver **7254***b* has a shorter firing stroke than the third driver **7254***c*. Such an arrangement may be useful to form different rows of staples to different formed heights, for example. In other embodiments, the drivers **7254***a*, **7254***b*, and **7254***c* may have any suitable firing stroke. In at least one embodiment, the drivers **7254***a*, **7254***b*, and **7254***c* have the same firing stroke, for example. Such an arrangement may be useful to form different rows of staples to the same formed height, for example.

FIG. **107** is a perspective view of a portion of a staple cartridge **4410** for use with a circular surgical stapling instrument in accordance with at least one embodiment. A variety of circular surgical stapling instruments are known. For example, U.S. patent application Ser. No. 14/836,110, filed Aug. 26, 2015, entitled SURGICAL STAPLING CONFIGURATIONS FOR CURVED AND CIRCULAR STAPLING INSTRUMENTS, which is hereby incorporated by reference in its entirety, discloses various circular surgical stapling instrument arrangements. U.S. patent application Ser. No. 14/498,070, filed Sep. 26, 2014, entitled CIRCULAR FASTENER CARTRIDGES FOR APPLYING RADIALLY EXPANDING FASTENER LINES, the entire disclosure of which is hereby incorporated by reference herein also discloses various circular surgical stapler arrangements. As discussed in those references, a circular surgical stapler generally comprises a frame assembly that comprises an attachment portion that is configured to operably couple an anvil to the circular surgical stapler.

In general, the anvil includes an anvil head that supports an annular line or lines of staple-forming pockets. An anvil stem or trocar portion is attached to the anvil head and is configured to be removably coupled to the anvil attachment portion of the circular stapling instrument. Various circular surgical stapling instruments include means for selectively moving the anvil toward and away from the surgical staple cartridge such that the target tissue may be clamped between the anvil and the deck of the surgical staple cartridge. The surgical staple cartridge removably stores a plurality of surgical staples therein that are arranged in one or more annular arrays that correspond to the arrangement of staple forming pockets provided in the anvil. The staples are removably stored within corresponding staple cavities that are formed in the staple cartridge and are supported on corresponding portions of a selectively movable pusher assembly that is operably received within the circular stapler. The circular stapler further includes an annular knife or cutting member that is configured to incise the tissue that is clamped between the anvil and the staple cartridge.

Referring again to FIG. **107**, the staple cartridge **4410** comprises a cartridge body **4411** that defines an annular cartridge deck surface **4412**. The cartridge body **4411** comprises an inner annular row **4420** of spaced inner staple cavities **4422** and an outer annular row **4440** of spaced outer staple cavities **4442**. The inner staple cavities **4422** are staggered relative to the outer spaced staple cavities **4442** as can be seen in FIG. **107**. Supported within each inner staple cavity **4422** is an inner surgical staple **4430** and supported within each outer staple cavity **4442** is an outer surgical staple **4450**. The outer staples **4450** in the outer annular row **4440** may have different characteristics than the inner staples **4430** in the inner annular row **4420**. For example, as illustrated in the embodiment of FIG. **108**, the outer staples **4450** have an unformed "gullwing" configuration. In particular, each outer staple **4450** includes a pair of legs **4454**, **4464** that extend from a staple crown **4452**. Each leg **4454**, **4464** includes a vertical portion **4456**, **4466**, respectively that extends from the crown **4452**. The vertical portions **4456**, **4466** may be parallel to each other in one embodiment. However, in the illustrated arrangement, the vertical portions **4456**, **4466** are not parallel to each other. For example, the angle A_1 between the crown **4452** and the vertical portions **4456**, **4466** in the illustrated arrangement is greater than ninety degrees. See FIG. **108**. Further details regarding the staple configuration may be found in U.S. patent application Ser. No. 14/319,008, filed Jun. 30, 2014, entitled FASTENER CARTRIDGE COMPRISING NON-UNIFORM FASTENERS, U.S. Patent Application Publication No. 2015/0297232, the entire disclosure of which is hereby incorporated by reference herein. However, other the vertical portions **4456**, **4466** may be arranged at other angles with respect to the crown **4452**. One advantage of having the vertical leg portions **4456**, **4466** oriented at angles greater than ninety degrees relative to the crown **4452** is that such arrangement may assist in the temporary retention of the staple within its corresponding staple cavity.

At least one leg **4454**, **4464** includes an inwardly extending end portion. In the embodiment depicted in FIG. **108** for example, each leg **4454**, **4464** includes an inwardly extending leg portion. In the illustrated arrangement, leg portion **4458** extends inwardly from the vertical leg portion **4456** and the leg portion **4468** extends inwardly from the vertical leg portion **4466**. As can be seen in FIG. **108**, the leg portion **4458** is shorter than the leg portion **4468**. Stated another way, the distance H_A between the staple crown **4452** and the point where the leg portion **4458** angles inward from the vertical leg portion **4456** is greater than the distance H_C between the staple crown **4452** and the point where the leg portion **4468** angles inward from the vertical leg portion **4466**. Thus, distance H_B in at least one embodiment is shorter than the length H_D. The angle A_2 at which the leg portion **4458** angles relative to the vertical leg portion **4556** may be equal to the angle A_3 at which the leg portion **4468** angles relative to the vertical leg portion **4466** or angles A_2 and A_3 may be different from each other. Further details regarding the staple configuration may be found in U.S. patent application Ser. No. 14/319,008, filed Jun. 30, 2014, entitled FASTENER CARTRIDGE COMPRISING NON-UNIFORM FASTENERS, U.S. Patent Application Publication No. 2015/0297232, which has been herein incorporated by reference.

In at least one embodiment, each inner surgical staple **4430** may have the configuration illustrated in FIG. **108**. As can be seen in FIG. **108**, the inner surgical staple **4430** has a crown **4432** and two vertical legs **4434**, **4436** extending therefrom. The vertical legs **4434**, **4436** may extend relatively perpendicularly from the crown **4432** or they may extend at angles A_4 that may be greater than ninety degrees. Such arrangement may assist in the temporary retention of the staples **4430** within their corresponding staple cavity **4422**. However, vertical legs **4434**, **4436** may extend from the crown **4432** at different angles. In some embodiments, angles A_4 are equal to each other. In other embodiments, angles A_4 are different from each other. In the illustrated embodiment, the inner staples **4430** and the outer staples **4450** each have the same unformed height UFH. The inner

and outer staples **4430**, **4450** are formed from conventional surgical staple wire. In at least one embodiment, the diameter of the staple wire used to form the outer staples **4450** is greater than the diameter of the staple wire used to form the inner staples **4430**. In other embodiments, the inner and outer staples may have the same diameters and be formed from wires with other diameters. In some arrangements, the inner and outer staples may be formed from the same type of staple wire. Thus, in such arrangement, the wire diameters of the inner and outer staples would be the same. In yet another embodiment, however, the inner and outer staples may have the same unformed shapes/configurations, yet be formed from two different staple wires that have different wire diameters. Also in at least one arrangement, the crown width CW_O of each outer staple **4450** is larger than the crown width CW_I of each inner staple **4430**. Further details regarding the staple configuration may be found in U.S. patent application Ser. No. 14/319,008, filed Jun. 30, 2014, entitled FASTENER CARTRIDGE COMPRISING NON-UNIFORM FASTENERS, U.S. Patent Application Publication No. 2015/0297232, which has been herein incorporated by reference.

Returning to FIG. **107**, the staple cartridge **4410** includes an outer rim **4414** that extends above the deck surface **4412**. During surgery, the clinician can adjust the location of the anvil relative to the cartridge of a circular stapler. In at least one such embodiment, the staple cartridge **4410** further comprises deck features **4416** and **4418** that extend from the deck surface **4412**. As can be seen in FIG. **107**, a series of inner deck features **4416** are provided between the inner row **4420** of staple cavities **4422** and a centrally-disposed knife opening **4413** through which the knife or cutting member will pass during the firing process. The deck features **4416** may be shaped and located relative to the inner staple cavities and opening **4413** as shown in FIGS. **107**, **109** and **110**. For example, each inner deck feature **4416** may have a flat wall portion **4415** that is coextensive with the wall of the knife opening **4413** and a conical or sloping body portion **4417** that is adjacent to the row of inner staple cavities **4422**. See FIGS. **109** and **110**. In the embodiment depicted in FIG. **107**, the deck features **4416** are oriented in the gap between two adjacent inner staple cavities **4422** and are staggered between pairs of staple cavities **4422** as shown. The cavity extension arrangements or deck features in this system may serve to lower pressure that is commonly encountered in flat deck cartridges. This disclosed arrangement may also help to mitigate tissue movement and slippage. Since slippage of the tissue is generally undesirable, the outside diameter holding features may be bigger and more numerous. The internal diameter features may serve to increase tissue tension/shear as the blade passes next to the inside internal diameter which may make the system cut better. However, the deck features **4416** may have different shapes and configurations and may be located in different locations on the deck surface **4412**.

As can also be seen in FIGS. **107**, **109** and **110**, every other outer staple cavity **4442** includes an outer deck feature **4418** that is associated with each end thereof. Outer deck features **4418** extend above the deck surface **4412** and guide the outer staples **4450** toward the anvil when the staples **4450** are being ejected from the staple cartridge **4410**. In such embodiments, the outer staples **4450** may not extend above the outer deck features **4418** until they are moved toward the anvil by the firing member. Referring primarily to FIG. **107**, in at least one embodiment, the outer deck features **4418** do not extend around the entirety of the corresponding outer staple cavity **4442**. A first outer deck feature **4418** is positioned adjacent a first end of a corresponding outer cavity **4442** and a second outer deck feature **4418** is positioned adjacent a second end of the outer cavity **4442**. As can be seen in FIG. **107**, the outer deck features **4418** are associated with every other one of the outer staple cavities **4442**. Such arrangement may serve to lower overall pressure and minimize tissue stretch and movement. In other embodiments, first and second outer deck features **4418** may be associated with every one of the outer staple cavities **4442**, however. In yet other embodiments, an outer deck feature may extend around the entire perimeter of a corresponding outer cavity. As can be seen in FIG. **109**, the inner deck features **4416** are shorter than the outer deck features **4418**. Stated another way, each inner deck feature protrudes above the deck surface **4412** a distance that is less than the distance that each outer deck feature **4418** protrudes above the deck surface **4412**. Each outer deck feature may protrude above the deck surface **4412** the same distance that the outer rim **4414** protrudes above the deck surface **4412**. In addition, as can also be seen in FIG. **109**, each outer deck feature **4418** has a generally conical or tapered outer profile which may help to prevent tissue from snagging on the deck features during insertion of the stapler head through a patient's colon and rectum.

The above-mentioned deck feature arrangements may provide one or more advantages. For example, the upstanding outer rim may help to prevent tissue from sliding across the cartridge deck. This upstanding rim could also comprise a repeating pattern of highs and lows rather than being one continuous lip formation. The inside upstanding features may also help to retain the tissue adjacent to the blade and lead to improved cutting. The inside deck features could be between every cavity or in alternative arrangements, the deck feature(s) may comprise one continuous upstanding lip. It may be desirable to balance the number of deck features to minimize the number of high force/compression zones while attaining a desired amount of tissue immobilization. The cavity concentric features may serve the additional purpose of minimization of tissue flow in the areas where the staple legs project from. Such arrangements also facilitate desirable staple formation as the staple legs eject and transition to the receiving anvil pocket which may consist of corresponding forming pockets. Such localized pocket features increase the low compression zones while facilitating leg support from the cartridge as the staple exits the cartridge. This arrangement thereby minimizes the distance that the staple must "jump" before it meets the anvil pocket. Tissue flow tends to increase going from the center of the cartridge radially outward. Referring to FIG. **118**, the improved standing outside row extensions have a tendency to stage tissue as they are inserted up through the colon because it is a tube.

FIGS. **109** and **110** illustrate use of the surgical staple cartridge **4410** in connection with an anvil **4480**. The anvil **4480** comprises an anvil head portion **4482** that operably supports a staple forming insert or portion **4484** and a knife washer **4490**. The knife washer **4490** is supported in confronting relationship to the knife **4492** that is supported in the stapler head. In the illustrated embodiment, the staple forming insert **4484** is fabricated from, for example, steel, stainless steel, etc. and contains an inner row of inner staple forming pockets **4486** and an outer row of outer staple forming pockets **4488**. Each inner staple forming pocket **4486** corresponds to one of the inner staple cavities **4422** and each outer staple forming pocket **4488** corresponds to one of the outer staple cavities **4442**. In the illustrated arrangement, when the anvil **4480** is moved to its firing position relative

to the cartridge deck surface **4412**, the inner staple forming pockets **4486** are closer to the cartridge deck surface **4412** than are the outer staple forming pockets **4488**. Stated another way, the first gap g_1 or first staple forming distance between a first staple forming portion **4485** and the cartridge deck surface **4412** is less than the second gap g_2 or second staple forming distance between a second staple forming portion **4487** and the cartridge deck surface **4412**.

As can be further seen in FIGS. **109** and **110**, the inner staples **4430** are each supported within their corresponding inner staple cavity **4422** on a corresponding inner driver portion **4502** of a pusher assembly **4500** and each of the outer staples **4450** are supported within their corresponding outer staple cavity **4442** on a corresponding outer driver portion **4504**. Advancement of the pusher assembly **4500** toward the anvil **4480** will cause the inner and outer staples **4430**, **4450** to be driven into forming contact with their respective corresponding staple forming pockets **4486**, **4488** as shown in FIG. **110**. In addition, the knife **4492** is advanced distally through the tissue that is clamped between the anvil **4480** and the deck surface **4412** and through a frangible bottom **4491** of the knife washer **4490**. Such arrangement serves to provide the outer staples **4450** with a formed height FH_O that is larger than the formed height FH_I of the inner staples **4430**. Stated another way, the outer row **4440** of outer staples **4450** are formed into a larger "B" formation resulting in a greater capture volume and/or taller staple forming height to alleviate high tissue compression near the outer row of staples **4440**. A larger B formation may also improve blood flow toward the inner rows. In various instances, the outer row **4440** of outer staples **4450** comprise a greater resistance to unfolding by utilizing a larger staple crown, staple leg widths, and/or staple leg thicknesses.

The quantity of staples used in each row of staples can vary. In one embodiment, for example, there are more outer staples **4450** than there are inner staples **4430**. Another embodiment employs more inner staples **4430** than outer staples **4450**. In various instances, the wire diameter of the outer staples **4450** is larger than the wire diameter of the inner staples **4430**. The inner and outer staples **4430**, **4450** may have the same unformed heights UFH. The crown widths CW_O in the outer row **4440** of outer staples **4450** are larger than the crown widths CW_I of the inner row **4420** of inner staples **4430**. The gullwing configuration of the outer staples **4450** employs bends that are located at different distances from their respective crown. Use of the stepped anvil configuration with a flat (unstepped) cartridge deck surface **4412** with uniform driver or pusher travel yield staples with different formed heights.

FIG. **111** illustrates another staple cartridge embodiment **4610**. As can be seen in FIG. **111**, the staple cartridge **4610** includes a cartridge deck **4612** that includes an inner annular row **4620** of spaced inner staple cavities **4622** and an outer annular row **4640** of outer spaced staple cavities **4642**. The inner staple cavities **4622** are staggered relative to the outer spaced staple cavities **4642** as can be seen in FIG. **111**. Supported within each inner staple cavity **4622** is an inner surgical staple **4630** and supported within each outer staple cavity **4642** is an outer surgical staple **4650**. In addition, an outer rim **4614** extends above the deck surface **4612**. In various embodiments, further to the above, the staples **4630**, **4650** do not protrude above the deck surface **4612** until they are moved toward the anvil by the firing member. Such embodiments may frequently utilize small staples relative to the depth of their respective staple cavity in which they are stored. In other embodiments, the legs of the staples protrude above the deck surface **4612** when the staples are in their unfired positions. In at least one such embodiment, the staple cartridge **4610** further comprises deck features **4616** and **4618** that extend from the deck surface **4612**.

As can also be seen in FIG. **111**, every other inner staple cavity **4622** includes an inner deck feature **4616** that is associated with each end thereof. Inner deck features **4616** extend above the deck surface **4612** and guide the corresponding inner staples **4630** toward the anvil when the corresponding inner staples **4630** are being ejected from the staple cartridge **4610**. In such embodiments, the inner staples **4630** may not extend above the inner deck features **4616** until they are moved toward the anvil by the firing member. In the illustrated example, the inner deck features **4616** do not extend around the entirety of the corresponding inner staple cavity **4622**. A first inner deck feature **4616** is positioned adjacent a first end of a corresponding inner cavity **4622** and a second inner deck feature **4616** is positioned adjacent a second end of the inner cavity **4622**. In other embodiments, the inner deck features **4416** may be associated with every one of the inner staple cavities **4622**, however. In yet other embodiments, an inner deck feature may extend around the entire perimeter of a corresponding inner staple cavity. By employing deck features that have different heights in concentric patterns wherein they are associated with every other cavity may provide more lower pressure tissue gap areas, while balancing them with the desire to guide as many and as much of the staple leg for as long as possible. Stated another way, such arrangement may minimize the amount of tissue flow reducing the overall amount of pressure applied to the target tissue.

Still referring to FIG. **111**, each outer staple cavity **4642** includes an outer deck feature **4618** that is associated with each end thereof. Outer deck features **4618** extend above the deck surface **4612** and guide the outer staples **4650** toward the anvil when the staples **4650** are being ejected from the staple cartridge **4610**. In such embodiments, the outer staples **4650** may not extend above the outer deck features **4618** until they are moved toward the anvil by the firing member. As can be seen in FIG. **111**, in the illustrated example, the outer deck features **4618** do not extend around the entirety of the corresponding outer staple cavity **4642**. A first outer deck feature **4618** is positioned adjacent a first end of a corresponding outer cavity **4642** and a second outer deck feature **4618** is positioned adjacent a second end of the outer cavity **4642**. As can be seen in FIG. **111**, outer deck features **4618** are associated with every one of the outer staple cavities **4642**. In other embodiments, first and second outer deck features **4618** may be associated with every other one of the outer staple cavities **4642**, however. In yet other embodiments, an outer deck feature may extend around the entire perimeter of a corresponding outer cavity. As can be seen in FIGS. **112** and **113**, the inner deck features **4616** and the outer deck features **4618** extend above the deck surface **4612** the same distance. Stated another way, they have the same heights. In addition, as can also be seen in FIGS. **112** and **113**, each inner deck feature **4416** and each outer deck feature **4618** has a generally conical or tapered outer profile which may help to prevent tissue from snagging on the deck features during insertion of the stapler head through a patient's colon and rectum.

FIGS. **112** and **113** illustrate use of the surgical staple cartridge **4610** in connection with an anvil **4680**. The anvil **4680** comprises an anvil head portion **4682** that operably supports a staple forming insert or portion **4684** and a knife washer **4690**. The knife washer **4690** is supported in confronting relationship to a knife **4692** that is supported in the stapler head. In the illustrated embodiment, the staple form-

ing insert **4684** is fabricated from, for example, steel, stainless steel, etc. and contains an inner row of inner staple forming pockets **4686** and an outer row of outer staple forming pockets **4688**. Each inner staple forming pocket **4686** corresponds to one of the inner staple cavities **4622** and each outer staple forming pocket **4688** corresponds to one of the outer staple cavities **4642**. In the illustrated arrangement, the inner staple forming pockets **4686** are located the same distance g_1 from the deck surface **4612** as are the outer staple forming pockets **4688**.

As can be further seen in FIGS. **112** and **113**, an inner staple **4630** is supported within a corresponding inner staple cavity **4622** on a corresponding inner driver portion **4702** of a pusher assembly **4700**. An outer staple **4650** is supported within a corresponding outer staple cavity **4642** on a corresponding outer driver portion **4704**. Advancement of the pusher assembly **4700** toward the anvil **4680** will cause the inner and outer staples **4630**, **4650** to be driven into forming contact with their respective corresponding staple forming pockets **4686**, **4688** as shown in FIG. **113**. In addition, the knife **4692** is advanced distally through the tissue that is clamped between the anvil **4680** and the deck surface **4612** and through a frangible bottom **4691** of the knife washer **4690**. In the example illustrated in FIGS. **112** and **113**, each inner staple **4630** is formed from a first staple wire that has a first wire diameter D_1 and has a first unformed height L_1. For example, the first wire diameter D_1may be approximately 0.0079"-0.015" (increments are usually 0.0089", 0.0094", and 0.00145") and the first unformed height L_1 may be approximately 0.198"-0.250". Each outer staple **4650** is formed from a second staple wire that has a second wire diameter D_2 and has a second unformed height L_2. In the embodiment depicted in FIGS. **112** and **113**, $D_1<D_2$ and $L_1<L_2$. However, as can be seen in FIG. **113**, the inner and outer staples **4630**, **4650** are formed with the same formed heights FH's. The thicker wire staples on the outside tend to provide high tear and burst strengths as compared to the inside row of smaller diameter staples which tend to hold better hemostatically. Stated another way, the tighter inside rows of staples may hold better hemostatically while the outer rows of less compressed staples may facilitate better healing and blood flow. In addition, the staples with longer legs, even when formed at the same heights as staples with shorter legs, may ensure more B-bending which may make the longer legged staples stronger and more likely to be properly formed enough to hold in high load conditions. The quantity of staples used in each row of staples can vary. In one embodiment, for example, the inner row **4620** has the same number of inner staples **4630** as does the outer row **4640** of outer staples **4650**. In various arrangements, the crown widths of the staples **4650** is larger than the crown widths of the inner staples **4630**. In other embodiments, the staples **4630**, **4650** may have identical crown widths. In other arrangements, the staples **4630**, **4650** may be of the gullwing design described above. For example, at least one leg of the staple may include an end portion that is bent inwardly or both legs may include end portions that are bent inwardly toward each other. Such staples may be employed in the inner annular row or the outer annular row or in both of the inner and outer annular rows.

FIG. **114** illustrates another circular staple cartridge embodiment **4810** that includes a cartridge deck **4812** that includes three annular rows **4820**, **4840**, **4860** of spaced staple cavities. The inner or first row **4820** contains a first plurality of inner or first staple cavities **4822** that are each arranged at a first angle. Each inner staple cavity **4822** operably supports a corresponding inner or first staple **4830** therein. The inner cavities **4822** orient the first staples **4830** at the same uniform angle relative to the tangential direction. In the illustrated example, each inner staple **4830** is formed from a first staple wire that has a first staple diameter D_1. In one example, the first staple wire diameter D_1 may be approximately 0.0079"-0.015" (increments are usually 0.0089", 0.0094", and 0.00145"). Referring to FIG. **117**, each inner staple **4830** includes a first crown **4832** and two first legs **4834**. The first crown has a first crown width C_1 and each first leg **4834** has a first unformed leg length L_1 In one example, the first crown width C_1 may be approximately 0.100"-0.300" and the first unformed leg length L_1 may be approximately 0.198"-0.250". The first legs **4834** may be each arranged at an angle A_1 relative to the first staple crown **4832**. The angle A_1 may be approximately 90° or it may be slightly greater than 90° such that the first legs **4834** are slightly splayed outward to assist in retaining the first staple **4830** in its corresponding first staple cavity **4822**.

Turning to FIGS. **115** and **116**, the staple cartridge **4810** is intended to be used in connection with an anvil **4900** that includes two inner or first rows **4902** of staggered or angled first pairs **4903** of first staple forming pockets **4904**. Each first pair **4903** of first staple forming pockets **4904** correspond to one first staple **4830**. One first staple forming pocket **4904** corresponds to one first staple leg **4834** and the other first staple forming pocket **4904** of the pair **4903** corresponds to the other first staple leg **4834**. Such arrangement serves to establish a formed staple configuration wherein the first staple legs **4834** of a first staple **4830** are formed out of plane with the first crown **4832** of that particular first staple **4830** such that one first leg **4834** is formed on one side of the first crown **4832** and the other first leg **4834** is formed on the other side of the first crown **4832**. This "three-dimensional" formed staple configuration is shown with respect to some of the first staple forming pockets **4904** in FIG. **115**.

As can be most particularly seen in FIG. **116**, the cartridge deck **4812** is of "stepped" construction. The cartridge deck **4812** includes an inner or first cartridge deck portion **4814** that corresponds to the inner or first annular row **4820** of inner or first staple cavities **4822**. As can be further seen in FIG. **116**, when the anvil **4900** is moved to the closed or clamping position, the portion of the anvil **4900** containing the first staple forming pockets **4904** is spaced from the deck portion **4814** a first gap distance g_1.

Referring again to FIGS. **114**, **116** and **117**, the middle or second row **4840** contains a second plurality of middle or second staple cavities **4842** that are each arranged at a second angle. Each middle staple cavity **4842** operably supports a corresponding middle or second staple **4850** therein. The middle cavities **4842** orient the middle or second staples **4850** at the same uniform second angle relative to the tangential direction. However, the second angle differs from the first angle. Stated another way, when the first and second staples are supported in their respective first and second cavities, the axis of the first crown of each first staple **4830**, when extended, would ultimately intersect the extended axis of the second crown of an adjacent second staple **4850**. As can be seen in FIGS. **116** and **117**, each second or middle staple **4850** comprises a second staple crown or base **4852** and two second legs **4854**. The staple base **4852** may have a somewhat rectangular cross-sectional shape and be formed from a flat sheet of material. The second staple legs **4854** may have a round cross-sectional profile, for example. The second or middle staples may comprise various staple configurations disclosed in, for example, U.S. patent application Ser. No. 14/836,110, filed

Aug. 26, 2015, entitled SURGICAL STAPLING CONFIGURATIONS FOR CURVED AND CIRCULAR STAPLING INSTRUMENTS, which has been herein incorporated by reference in its entirety. Having round staple legs that extend from a staple base portion having the rectangular cross-sectional profile can provide a staple base portion and staple legs with no preferential bending planes. The second staple **4850** comprises bend portions **4856** where the staple legs **4854** extend from the staple base portion **4852**. The bend portions **4856** may comprise a substantially square cross-sectional profile. The square profile and the rectangular profile of the bend portions **4856** and the staple base portion **4852**, respectively, provide a stiff connection and backbone to the round staple legs **4854**. The round staple legs **4854** eliminate preferential bending planes that staple legs with a square, rectangular, or any shape with vertices or a non-uniform shape, cross-sections could have. Each of the second staple legs **4854** has a second diameter D_2. In at least one embodiment, $D_2>D_1$. The second base or crown **4852** has a second crown width C_2. In one arrangement, $C_2>C_1$. The second legs **4854** may be each arranged at an angle A_2 relative to the second base or crown **4852**. The angle A_2 may be approximately 90° or it may be slightly greater than 90° such that the second legs **4854** are slightly splayed outward to assist in retaining the second staple **4850** in its corresponding second staple cavity **4842**.

Turning to FIGS. **115** and **116**, the anvil **4900** further comprises two middle or second rows **4912** of staggered or angled second pairs **4913** of second staple forming pockets **4914**. Each second pair **4913** of second staple forming pockets **4914** correspond to one second staple **4850**. One second staple forming pocket **4914** corresponds to one second staple leg **4854** and the other second staple forming pocket **4914** of the pair **4913** corresponds to the other second staple leg **4854**. Such arrangement serves to establish a formed staple configuration wherein the second legs **4854** are formed out of plane with the second base **4852** of the particular second staple **4850**. This "three-dimensional" formed staple configuration is shown with respect to some of the second staple forming pockets **4914** in FIG. **115**.

As can be most particularly seen in FIG. **116**, the cartridge deck **4812** further comprises a second cartridge deck portion **4816** that corresponds to the middle or second annular row **4840** of middle or second staple cavities **4842**. As can be further seen in FIG. **116**, when the anvil **4900** is moved to the closed or clamping position, the portion of the anvil **4900** containing the second staple forming pockets **4914** is spaced from the deck portion **4816** a second gap distance g_2. In the illustrated example, $g_2>g_1$.

Referring again to FIGS. **114**, **116** and **117**, the outside or third row **4860** contains a third plurality of outside or third staple cavities **4862** that are sized relative to the second staple cavities **4842** such that each outer or third staple cavity **4862** spans a distance between two adjacent second cavities **4842**. Each outer staple cavity **4862** operably supports a corresponding outer or third staple **4870** therein. The outer cavities **4862** orient the outer or third staples **4870** tangent to the circumferential direction. As can be seen in FIGS. **116** and **117**, each third or outer staple **4870** comprises a third staple crown or base **4872** and two third legs **4874**. The staple base **4872** may have a somewhat rectangular cross-sectional shape and be formed from a flat sheet of material. The third staple legs **4874** may have a round cross-sectional profile, for example. The third or outer staples **4870** may comprise various staple configurations disclosed in, for example, U.S. patent application Ser. No. 14/836,110, filed Aug. 26, 2015, entitled SURGICAL STAPLING CONFIGURATIONS FOR CURVED AND CIRCULAR STAPLING INSTRUMENTS, which has been herein incorporated by reference in its entirety. Having round staple legs that extend from a staple base portion having the rectangular cross-sectional profile can provide a staple base portion and staple legs with no preferential bending planes. The third staple **4870** comprises bend portions **4876** where the staple legs **4874** extend from the staple base portion **4872**. The bend portions **4876** may comprise a substantially square cross-sectional profile. The square profile and the rectangular profile of the bend portions **4876** and the staple base portion **4872**, respectively, provide a stiff connection and backbone to the round staple legs **4874**. The round staple legs **4874** eliminate preferential bending planes that staple legs with a square, rectangular, or any shape with vertices or a non-uniform shape, cross-sections could have. In at least one embodiment, $D_3>D_2$. The third base or crown **4872** has a third crown width C_3 and each third leg **4874** has a third unformed leg length L_3. In one arrangement, $C_3>C_2$ and $L_3>L_2$. The third legs **4874** may be each arranged at an angle A_3 relative to the third base or crown **4872**. The angle A_3 may be approximately 90° or it may be slightly greater than 90° such that the third legs **4874** are slightly splayed outward to assist in retaining the third staple **4870** in its corresponding third staple cavity **4862**.

Turning to FIGS. **115** and **116**, the anvil **4900** further comprises an outer row **4916** of outer or third staple forming pockets **4918**. Each third staple forming pocket **4918** corresponds to one third staple **4870**. As can be most particularly seen in FIG. **116**, the cartridge deck **4812** further comprises a third cartridge deck portion **4818** that corresponds to the outer or third row **4860** of outer or third staple cavities **4862**. As can be further seen in FIG. **116**, when the anvil **4900** is moved to the closed or clamping position, the portion of the anvil **4900** containing the third staple forming pockets **4918** is spaced from the deck portion **4818** a third gap distance g_3. In the illustrated example, $g_3>g_2$. As can be further seen in FIG. **116**, in at least one embodiment, a tissue thickness compensator **4920** is employed in connection with each outer or third staple **4870**. The tissue thickness compensator may comprise a woven material that is embedded with oxidized regenerated cellulose (ORC) to promote hemostasis. The tissue thickness compensator **4920** may comprise any of the various tissue thickness compensator arrangements disclosed in U.S. patent application Ser. No. 14/187,389, filed Feb. 24, 2014, entitled IMPLANTABLE LAYER ASSEMBLIES, U.S. Patent Application Publication No. 2015/0238187, the entire disclosure of which is hereby incorporated by reference herein. As can be seen in FIG. **116**, the tissue thickness compensator **4920** has a thickness designated as "a". In one embodiment, the tissue thickness compensator has a thickness of approximately 0.015"-0.045". However, other thicknesses may be employed.

Thus, in at east one embodiment as depicted in FIGS. **114-117**, the staple cartridge **4810** may employ a different number of staples in each of the three rows of staples. In one arrangement, the inner row of staples comprises conventional staples with the smallest wire diameter and the shortest unformed leg length. Each first staple has the shortest crown width and each first staple is oriented at a uniform angle relative to the tangential direction. The middle staples have a configuration that differs from the first staple configuration. Each leg of the middle staples comprises a moderate wire diameter and unformed leg length. Each middle staple has a slightly larger crown width than the crown widths of the inner staples and each middle staple is

oriented at a uniform angle relative to the tangential direction, but at a different angle relative to the inner row of inner staples. Each outer staple has a configuration that is similar to the configuration of the middle staples. Each of the third legs of each outer staple comprises the largest wire diameter as compared to the wire diameters of the legs of the inner and middle staples. The crown width of each outer staple is significantly larger than the crown widths of the inner and middle staples. Each outer staple is oriented tangentially to the circumferential direction of the cartridge. The outer row of staples employs woven tissue thickness compensators (spacer fabric) that is embedded with ORC to promote hemostasis. The stepped anvil and the stepped cartridge deck yield different formed staple heights with the staples having the shortest formed heights being in the inner row and the staples having the longest formed heights being in the outer row. The anvil pockets corresponding to the inner and middle rows of staples are "tilted" to create three dimensional staples in the inner and middle rows. "Bathtub-type" anvil pockets correspond to the outer row of staples. In at least one embodiment, the staples may be sequentially fired. For example, the staples in the inner and middle rows may be fired first and the staples in the outer row fired thereafter. The annular knife cuts the clamped tissue during the firing process.

As described in various embodiments of the present disclosure, a circular stapling instrument includes an anvil and a staple cartridge. One or both of the anvil and the staple cartridge is movable relative to the other between an open configuration and a closed configuration to capture tissue therebetween. The staple cartridge houses staples inside, or at least partially inside, circular rows of staple cavities. The staples are deployed in circular rows from their respective staple cavities into the captured tissue and are formed against corresponding circular rows of forming pockets in the anvil. A firing drive is configured to eject the staples from the staple cartridge during a firing stroke of the firing drive.

An anvil of a circular stapling instrument generally comprises a tissue compression surface and an annular array of staple forming pockets defined in the tissue compression surface. The anvil further comprises an attachment mount and a stem extending from the attachment mount. The stem is configured to be releasably attached to a closure drive of the circular stapling instrument so that the anvil can be moved toward and away from a staple cartridge of the circular stapling instrument.

The staple cartridge and the anvil can travel separately within a patient and are combined at the surgical field. In various instances, the staple cartridge, for example, travels through a narrow tubular body of the patient such as, for example, a colon. A staple cartridge may include several tissue-contacting features such as, for example, stepped decks and pocket extenders. To avoid unintentional injury to the patient as the staple cartridge travels toward a target tissue, the present disclosure, among other things, presents various modifications to several tissue-contacting features.

Referring to FIG. **118**, a partial cross-sectional view depicts a staple cartridge **15500** of a circular surgical instrument pressing against tissue (T) as the staple cartridge **15500** travels within a patient's body. Multiple structural features of the staple cartridge **15500** are modified to create an especially contoured outer frame **15502** to protect the tissue. The staple cartridge **15500** includes a plurality of annular rows of staple cavities. In at least one example, an outer row **15504** of staple cavities **15510** at least partially surrounds an inner row **15506** of staple cavities **15512**, as illustrated in FIG. **118**. The staple cavities **15510** and **15512** are configured to house staples **15530** and **15531**, respectively.

The terms inner and outer delineate a relationship with reference to a central axis **15533**. For example, an inner tissue-contacting surface **15518** is closer to the central axis **15533** than outer tissue-contacting surface **15516**.

As illustrated in FIG. **119**, the staple cartridge **15500** comprises a stepped cartridge deck **15508**. The outer row **15504** is defined in an outer tissue-contacting surface **15516** of the stepped cartridge deck **15508** while the inner row **15506** is defined in an inner tissue-contacting surface **15518** of the stepped cartridge deck **15508**. The outer tissue-contacting surface **15516** is stepped down from the inner tissue-contacting surface **15518** which creates a gradient that reduces friction as the staple cartridge **15500** is pressed against the tissue.

In certain instances, the outer tissue-contacting surface **15516** is parallel, or at least substantially parallel, to the inner tissue-contacting surface **15518**. In other instances, the outer tissue-contacting surface **15516** is slanted such that a first plane defined by the outer tissue-contacting surface **15516** is transverse to a second plane defined by the inner tissue-contacting surface **15518**. An angle is defined between the first plane and the second plane. The angle can be an acute angle. In at least one instance, the angle can be any angle selected from a range of greater than about 0° and less than or equal to about 30°, for example. In at least one instance, the angle can be any angle selected from a range of greater than about 5° and less than or equal to about 25°, for example. In at least one instance, the angle can be any angle selected from a range of greater than about 10° and less than or equal to about 20°, for example. A slanted outer tissue-contacting surface **15516** can reduce friction against, or snagging of, tissue as the staple cartridge **15500** is moved relative to the tissue. In at least one instance, a slanted outer tissue-contacting surface **15516** is also stepped down from the inner tissue-contacting surface **15518**.

In at least one instance, an inner portion of the outer tissue-contacting surface **15516** is planar, or at least substantially planar while an outer edge **15548** of the outer tissue-contacting surface **15516** is pitched, radiused, and/or beveled to reduce friction against, or snagging of, tissue as the staple cartridge **15500** is moved relative to the tissue. The staple cavities **15510** reside in the planar inner portion of the outer tissue-contacting surface **15516**, for example. An outer edge **15550** of the inner tissue-contacting surface **15518** can also be pitched, beveled and/or radiused to reduce friction against, or snagging of, tissue as the staple cartridge **15500** is moved relative to the tissue.

To accommodate staples with the same, or at least substantially the same, unformed heights in the staple cavities **15510** of the outer row **15504** and the staple cavities **15512** of the inner row **15504**, the staple cavities **15510** of the outer row **15504** comprise pocket extenders **15514**. The pocket extenders **15514** are configured to control and guide the staples **15530** as they are ejected from their respective staple cavities **15510**. In certain instances, the pocket extenders **15514** can be configured to accommodate staples with a greater unformed height s that the staples of the inner tissue-contacting surface **15518**, for example.

As illustrated in FIG. **119**, a staple cavity **15510** in the outer row **15504** is laterally aligned, or at least substantially aligned, with a gap **15520** between two adjacent staple cavities **15512** in the inner row **15506**. The staple cavity **15510** includes a first end **15522** and a second end **15524**. The second end **15524** overlaps with a first end **15526** of one of the two consecutive staple cavities **15512** such that a

staple leg **15530***a* positioned at the second end **15524** is radially aligned, or at least substantially aligned, with a staple leg **15531***a* positioned at the first end **15526**, as illustrated in FIG. **118**. Likewise, the first end **15522** of the staple cavity **15510** overlaps with a second end **15528** of the other one of the two consecutive staple cavities **15512**.

A pocket extender **15514** comprises a first jacket **15532** protruding from the outer tissue-contacting surface **15516** to conceal a tip **15536** of the staple leg **15530***a* that extends beyond the outer tissue-contacting surface **15516**. The first jacket **15532** comprises an end **15538** protruding from the first end **15522**, an inner side wall **15540** and an outer side wall **15542** extending away from the end **15538** to form the first jacket **15532**. In at least one instance, the first jacket **15532** defines, or at least substantially defines, a "C" shaped wall extending on a portion of a perimeter **15535** of the staple cavity **15510** that comprises the first end **15522**.

To reduce friction against the tissue, the inner side wall **15540** protrudes from the outer tissue-contacting surface **15516** to a greater height than the outer side wall **15542**. Said another way, the outer side wall **15542** is lower in height than the inner side wall **15540**. This arrangement creates a gradient for a smooth transition from the inner side wall **15540** to the outer side wall **15542** to the outer tissue-contacting surface **15516**. In at least one example, the inner side wall **15540** and the inner tissue-contacting surface **15518** comprise the same, or at least substantially the same, height with reference to the outer tissue-contacting surface **15516**. Alternatively, the inner side wall **15540** and the inner tissue-contacting surface **15518** comprise different heights with reference to the outer tissue-contacting surface **15516**. In certain instances, the inner side wall **15540** is lower in height relative to the inner tissue-contacting surface **15518** with reference to the outer tissue-contacting surface **15516**. This arrangement creates a gradient for a smooth transition from the inner tissue-contacting surface **15518** to the inner side wall **15540** to the outer side wall **15542** to the outer tissue-contacting surface **15516**.

The inner tissue-contacting surface **15518**, the inner side wall **15540**, the outer side wall **15542**, and/or the outer tissue-contacting surface **15516** define discrete portions of the contoured outer frame **15502**; nonetheless, as illustrated in FIG. **118**, such portions are kept sufficiently close to one another so that tissue cannot be trapped therebetween as the staple cartridge **15500** presses against the tissue. Furthermore, one or more of the portions may include slanted, contoured, curved, radiused, and/or beveled outer surfaces to reduce friction against the tissue. As illustrated in FIG. **118**, an upper surface **15544** of the outer side wall **15542** and an upper surface **15546** of the inner side wall **15540** are slanted, contoured, curved, radiused, and/or beveled to define the contoured outer frame **15502**.

In at least one instance, the upper surface **15544** and the upper surface **15546** define a slanted plane that is transverse to a first plane defined by the outer tissue-contacting surface **15516** and a second plane defined by the inner tissue-contacting surface **15518**. In at least one instance, a first angle is defined between the slanted plane and the first plane. A second angle can also be defined between the slanted plane and the second plane. The first and second angles can be the same, or at least substantially the same in value. Alternatively, the first angle can be different from the second angle in value. In at least one instance, the first angle and/or the second angle are acute angles. In at least one instance, the first angle is any angle selected from a range of greater than about 0° and less than or equal to about 30°, for example. In at least one instance, the first angle is any angle selected from a range of greater than about 5° and less than or equal to about 25°, for example. In at least one instance, the first angle is any angle selected from a range of greater than about 10° and less than or equal to about 20°, for example. In at least one instance, the second angle is any angle selected from a range of greater than about 0° and less than or equal to about 30°, for example. In at least one instance, the second angle is any angle selected from a range of greater than about 5° and less than or equal to about 25°, for example. In at least one instance, the second angle is any angle selected from a range of greater than about 10° and less than or equal to about 20° , for example.

Further to the above, the pocket extender **15514** includes a second jacket **15534** that is similar in many respects to the first jacket **15532**. Like the first jacket **15532**, the second jacket **15534** protrudes from the outer tissue-contacting surface **15516** to conceal a tip of a staple leg that extends beyond the outer tissue-contacting surface **15516**. The second jacket **15534** comprises an end **15538** protruding from the second end **15524**, an inner side wall **15540** and an outer side wall **15542** extending from the end **15538** to form the second jacket **15534**.

Although one pocket extender **15514** is illustrated in FIG. **119**, it is understood that one or more other pocket extenders **15514** may protrude from the outer tissue-contacting surface **15516**, for example. In at least one instance, the first jacket **15532** and the second jacket **15534** are connected via side walls to define a pocket extender that completely surrounds a staple cavity, for example.

Many of the surgical instrument systems described herein are motivated by an electric motor; however, the surgical instrument systems described herein can be motivated in any suitable manner. In various instances, the surgical instrument systems described herein can be motivated by a manually-operated trigger, for example. In certain instances, the motors disclosed herein may comprise a portion or portions of a robotically controlled system. Moreover, any of the end effectors and/or tool assemblies disclosed herein can be utilized with a robotic surgical instrument system. FIG. **82**A schematically depicts a robotic surgical instrument system **20'**; however, U.S. patent application Ser. No. 13/118,241, entitled SURGICAL STAPLING INSTRUMENTS WITH ROTATABLE STAPLE DEPLOYMENT ARRANGEMENTS, now U.S. Patent Application Publication No. 2012/0298719 , for example, discloses several examples of a robotic surgical instrument system in greater detail.

The surgical instrument systems described herein have been described in connection with the deployment and deformation of staples; however, the embodiments described herein are not so limited. Various embodiments are envisioned which deploy fasteners other than staples, such as clamps or tacks, for example. Moreover, various embodiments are envisioned which utilize any suitable means for sealing tissue. For instance, an end effector in accordance with various embodiments can comprise electrodes configured to heat and seal the tissue. Also, for instance, an end effector in accordance with certain embodiments can apply vibrational energy to seal the tissue.

The entire disclosures of:

European Patent Application No. EP 795298, entitled LINEAR STAPLER WITH IMPROVED FIRING STROKE, which was filed on Mar. 12, 1997;

U.S. Pat. No. 5,605,272, entitled TRIGGER MECHANISM FOR SURGICAL INSTRUMENTS, which issued on Feb. 25, 1997;

U.S. Pat. No. 5,697,543, entitled LINEAR STAPLER WITH IMPROVED FIRING STROKE, which issued on Dec. 16, 1997;

U.S. Patent Application Publication No. 2005/0246881, entitled METHOD FOR MAKING A SURGICAL STAPLER, which published on Nov. 10, 2005;

U.S. Patent Application Publication No. 2007/0208359, entitled METHOD FOR STAPLING TISSUE, which published on Sep. 6, 2007;

U.S. Pat. No. 4,527,724, entitled DISPOSABLE LINEAR SURGICAL STAPLING INSTRUMENT, which issued on Jul. 9, 1985;

U.S. Pat. No. 5,137,198, entitled FAST CLOSURE DEVICE FOR LINEAR SURGICAL STAPLING INSTRUMENT, which issued on Aug. 11, 1992;

U.S. Pat. No. 5,405,073, entitled FLEXIBLE SUPPORT SHAFT ASSEMBLY, which issued on Apr. 11, 1995;

U.S. Pat. No. 8,360,297, entitled SURGICAL CUTTING AND STAPLING INSTRUMENT WITH SELF ADJUSTING ANVIL, which issued on Jan. 29, 2013;

U.S. patent application Ser. No. 14/813,242, entitled SURGICAL INSTRUMENT COMPRISING SYSTEMS FOR ASSURING THE PROPER SEQUENTIAL OPERATION OF THE SURGICAL INSTRUMENT, which was filed on Jul. 30, 2015;

U.S. patent application Ser. No. 14/813,259, entitled SURGICAL INSTRUMENT COMPRISING SEPARATE TISSUE SECURING AND TISSUE CUTTING SYS 1EMS, which was filed on Jul. 30, 2015;

U.S. patent application Ser. No. 14/813,266, entitled SURGICAL INSTRUMENT COMPRISING SYSTEMS FOR PERMITTING THE OPTIONAL TRANSECTION OF TISSUE, which was filed on Jul. 30, 2015;

U.S. patent application Ser. No. 14/813,274, entitled SURGICAL INSTRUMENT COMPRISING A SYSTEM FOR BYPASSING AN OPERATIONAL STEP OF THE SURGICAL INSTRUMENT; which was filed on Jul. 30, 2015;

U.S. Pat. No. 5,403,312, entitled ELECTROSURGICAL HEMOSTATIC DEVICE, which issued on Apr. 4, 1995;

U.S. Pat. No. 7,000,818, entitled SURGICAL STAPLING INSTRUMENT HAVING SEPARATE DISTINCT CLOSING AND FIRING SYSTEMS, which issued on Feb. 21, 2006;

U.S. Pat. No. 7,422,139, entitled MOTOR-DRIVEN SURGICAL CUTTING AND FASTENING INSTRUMENT WITH TACTILE POSITION FEEDBACK, which issued on Sep. 9, 2008;

U.S. Pat. No. 7,464,849, entitled ELECTRO-MECHANICAL SURGICAL INSTRUMENT WITH CLOSURE SYSTEM AND ANVIL ALIGNMENT COMPONENTS, which issued on Dec. 16, 2008;

U.S. Pat. No. 7,670,334, entitled SURGICAL INSTRUMENT HAVING AN ARTICULATING END EFFECTOR, which issued on Mar. 2, 2010;

U.S. Pat. No. 7,753,245, entitled SURGICAL STAPLING INSTRUMENTS, which issued on Jul. 13, 2010;

U.S. Pat. No. 8,393,514, entitled SELECTIVELY ORIENTABLE IMPLANTABLE FASTENER CARTRIDGE, which issued on Mar. 12, 2013;

U.S. patent application Ser. No. 11/343,803, entitled SURGICAL INSTRUMENT HAVING RECORDING CAPABILITIES; now U.S. Pat. No. 7,845,537;

U.S. patent application Ser. No. 12/031,573, entitled SURGICAL CUTTING AND FASTENING INSTRUMENT HAVING RF ELECTRODES, filed Feb. 14, 2008;

U.S. patent application Ser. No. 12/031,873, entitled END EFFECTORS FOR A SURGICAL CUTTING AND STAPLING INSTRUMENT, filed Feb. 15, 2008, now U.S. Pat. No. 7,980,443;

U.S. patent application Ser. No. 12/235,782, entitled MOTOR-DRIVEN SURGICAL CUTTING INSTRUMENT, now U.S. Pat. No. 8,210,411;

U.S. patent application Ser. No. 12/249,117, entitled POWERED SURGICAL CUTTING AND STAPLING APPARATUS WITH MANUALLY RETRACTABLE FIRING SYSTEM, now U.S. Pat. No. 8,608,045;

U.S. patent application Ser. No. 12/647,100, entitled MOTOR-DRIVEN SURGICAL CUTTING INSTRUMENT WITH ELECTRIC ACTUATOR DIRECTIONAL CONTROL ASSEMBLY, filed Dec. 24, 2009, now U.S. Pat. No. 8,220,688;

U.S. patent application Ser. No. 12/893,461, entitled STAPLE CARTRIDGE, filed Sep. 29, 2012, now U.S. Pat. No. 8,733,613;

U.S. patent application Ser. No. 13/036,647, entitled SURGICAL STAPLING INSTRUMENT, filed Feb. 28, 2011, now U.S. Pat. No. 8,561,870;

U.S. patent application Ser. No. 13/118,241, entitled SURGICAL STAPLING INSTRUMENTS WITH ROTATABLE STAPLE DEPLOYMENT ARRANGEMENTS, now U.S. Pat. No. 9,072,535;

U.S. patent application Ser. No. 13/524,049, entitled ARTICULATABLE SURGICAL INSTRUMENT COMPRISING A FIRING DRIVE, filed on Jun. 15, 2012; now U.S. Pat. No. 9,101,358;

U.S. patent application Ser. No. 13/800,025, entitled STAPLE CARTRIDGE TISSUE THICKNESS SENSOR SYSTEM, filed on Mar. 13, 2013, now U.S. Patent Application Publication No. 2014/0263551;

U.S. patent application Ser. No. 13/800,067, entitled STAPLE CARTRIDGE TISSUE THICKNESS SENSOR SYSTEM, filed on Mar. 13, 2013, now U.S. Patent Application Publication No. 2014/0263552;

U.S. Patent Application Publication No. 2007/0175955, entitled SURGICAL CUTTING AND FASTENING INSTRUMENT WITH CLOSURE TRIGGER LOCKING MECHANISM, filed Jan. 31, 2006; and

U.S. Patent Application Publication No. 2010/0264194, entitled SURGICAL STAPLING INSTRUMENT WITH AN ARTICULATABLE END EFFECTOR, filed Apr. 22, 2010, now U.S. Pat. No. 8,308,040, are hereby incorporated by reference herein.

Although various devices have been described herein in connection with certain embodiments, modifications and variations to those embodiments may be implemented. Also, where materials are disclosed for certain components, other materials may be used. Furthermore, according to various embodiments, a single component may be replaced by multiple components, and multiple components may be replaced by a single component, to perform a given function or functions. The foregoing description and following claims are intended to cover all such modification and variations.

The devices disclosed herein can be designed to be disposed of after a single use, or they can be designed to be used multiple times. In either case, however, a device can be reconditioned for reuse after at least one use. Reconditioning can include any combination of the steps including, but not

limited to, the disassembly of the device, followed by cleaning or replacement of particular pieces of the device, and subsequent reassembly of the device. In particular, a reconditioning facility and/or surgical team can disassemble a device and, after cleaning and/or replacing particular parts of the device, the device can be reassembled for subsequent use. Those skilled in the art will appreciate that reconditioning of a device can utilize a variety of techniques for disassembly, cleaning/replacement, and reassembly. Use of such techniques, and the resulting reconditioned device, are all within the scope of the present application.

The devices disclosed herein may be processed before surgery. First, a new or used instrument may be obtained and, when necessary, cleaned. The instrument may then be sterilized. In one sterilization technique, the instrument is placed in a closed and sealed container, such as a plastic or TYVEK bag. The container and instrument may then be placed in a field of radiation that can penetrate the container, such as gamma radiation, x-rays, and/or high-energy electrons. The radiation may kill bacteria on the instrument and in the container. The sterilized instrument may then be stored in the sterile container. The sealed container may keep the instrument sterile until it is opened in a medical facility. A device may also be sterilized using any other technique known in the art, including but not limited to beta radiation, gamma radiation, ethylene oxide, plasma peroxide, and/or steam.

While this invention has been described as having exemplary designs, the present invention may be further modified within the spirit and scope of the disclosure. This application is therefore intended to cover any variations, uses, or adaptations of the invention using its general principles.

Any patent, publication, or other disclosure material, in whole or in part, that is said to be incorporated by reference herein is incorporated herein only to the extent that the incorporated materials do not conflict with existing definitions, statements, or other disclosure material set forth in this disclosure. As such, and to the extent necessary, the disclosure as explicitly set forth herein supersedes any conflicting material incorporated herein by reference. Any material, or portion thereof, that is said to be incorporated by reference herein, but which conflicts with existing definitions, statements, or other disclosure material set forth herein will only be incorporated to the extent that no conflict arises between that incorporated material and the existing disclosure material.

What is claimed is:

1. A surgical stapling system, comprising:
- a first module, comprising:
  - a first display configured to display information regarding said surgical stapling system; and
  - a first attachment portion;
- a second module, comprising:
  - a second display configured to display information regarding said surgical stapling system; and
  - a second attachment portion configured to attach said second module to said first module; and
- a third module, comprising:
  - a third attachment portion configured to attach said third module to said first module in lieu of said second module; and
  - a third display configured to display information regarding said surgical stapling system.

2. The surgical stapling system of claim **1**, wherein said first module comprises a first actuator configured to control a first function of said second module, and wherein said second module comprises a second actuator configured to control a second function of said second module.

3. The surgical stapling system of claim **1**, wherein said second module comprises an end effector configured to form longitudinal rows of staples, and wherein said third module comprises an end effector configured to form annular rows of staples.

4. The surgical stapling system of claim **3**, wherein said first module comprises a first actuator configured to control a function of said second module if said second module is attached to said first module or said third module if said third module is attached to said first module, wherein said second module comprises a second actuator configured to control a second function of said second module, and wherein said third module comprises a third actuator configured to control a third function of said third module.

5. The surgical stapling system of claim **4**, wherein said third actuator is configured to adjust the height in which the staples in said annular rows of staples are formed.

6. The surgical stapling system of claim **4**, wherein said third actuator comprises a staple cartridge and an anvil, and wherein said third actuator is configured to adjust the distance between said staple cartridge and said anvil.

7. The surgical stapling system of claim **4**, wherein said second module comprises:
- a longitudinal shaft defining a longitudinal axis;
- an end effector;
- an electric motor operably coupled to said end effector; and
- a rotation joint configured to permit said electric motor to rotate said end effector about an axis which is collinear with said longitudinal axis.

8. A surgical stapling system, comprising:
- a handle, comprising:
  - a first display configured to display a first set of information regarding said surgical stapling system; and
  - a first attachment portion;
- a tool assembly, comprising:
  - a second display configured to display a second set of information regarding said surgical instrument system; and
  - a second attachment portion configured to attach said tool assembly to said handle;
- a replacement tool assembly, comprising:
  - a third attachment portion configured to attach said replacement tool assembly to said handle in lieu of said tool assembly; and a third display configured to display a third set of information regarding said surgical stapling system.

9. The surgical stapling system of claim **8**, wherein said handle comprises a first actuator configured to control a first function of said tool assembly, and wherein said tool assembly comprises a second actuator configured to control a second function of said tool assembly.

10. The surgical stapling system of claim **8**, wherein said tool assembly comprises an end effector configured to form longitudinal rows of staples, and wherein said replacement tool assembly comprises an end effector configured to form annular rows of staples.

11. The surgical stapling system of claim **10**, wherein said handle comprises a first actuator configured to control a function of said tool assembly if said tool assembly is attached to said handle or said replacement tool assembly if said replacement tool assembly is attached to said handle, wherein said tool assembly comprises a second actuator configured to control a second function of said tool assem-

bly, and wherein said replacement tool assembly comprises a third actuator configured to control a third function of said replacement tool assembly.

12. The surgical stapling system of claim **11**, wherein said third actuator is configured to adjust the height in which the staples in said annular rows of staples are formed.

13. The surgical stapling system of claim **11**, wherein said third actuator comprises a staple cartridge and an anvil, and wherein said third actuator is configured to adjust the distance between said staple cartridge and said anvil.

14. The surgical stapling system of claim **10**, wherein said tool assembly comprises:

a longitudinal shaft defining a longitudinal axis;

an end effector;

an electric motor operably coupled to said end effector; and

a rotation joint configured to permit said electric motor to rotate said end effector about an axis which is collinear with said longitudinal axis.

15. The surgical stapling system of claim **8**, wherein said third set of information is different than said second set of information.

16. The surgical stapling system of claim **8**, wherein said second set of information is different than said first set of information.

17. A surgical stapling system kit, comprising:

a first module, comprising:

a first display system configured to display a first set of data regarding the operation of said first module; and

a first attachment portion;

a second module, comprising:

a second display system configured to display a second set of data regarding the operation of said second module; and

a second attachment portion attachable to said first attachment portion of said first module; and

a third module, comprising:

a third display system configured to display a third set of data regarding the operation of said third module; and

a third attachment portion attachable to said first attachment portion of said first module.

18. The surgical stapling system kit of claim **17**, wherein said first display system is configured to display at least a portion of said second set of data when said second module is attached to said first module, and wherein said first display system is configured to display at least a portion of said third set of data when said third module is attached to said first module.

19. The surgical stapling system kit of claim **18**, wherein said second module comprises:

a staple cartridge;

staples removably stored in said staple cartridge; and

an anvil configured to deform said staples, wherein said second set of data includes the distance between said staple cartridge and said anvil.

20. The surgical stapling system kit of claim **17**, wherein said second module comprises:

a longitudinal shaft defining a longitudinal axis;

an end effector;

an electric motor operably coupled to said end effector; and

a rotation joint configured to permit said electric motor to rotate said end effector about an axis which is collinear with said longitudinal axis.

* * * * *