US010291066B1

(12) **United States Patent**
Leabman et al.

(10) **Patent No.: US 10,291,066 B1**
(45) **Date of Patent: May 14, 2019**

(54) **POWER TRANSMISSION CONTROL SYSTEMS AND METHODS**

(71) Applicant: **ENERGOUS CORPORATION**, San Jose, CA (US)

(72) Inventors: **Michael Leabman**, San Ramon, CA (US); **Douglas Bell**, Pleasanton, CA (US)

(73) Assignee: **Energous Corporation**, San Jose, CA (US)

(*) Notice: Subject to any disclaimer, the term of this patent is extended or adjusted under 35 U.S.C. 154(b) by 800 days.

(21) Appl. No.: **14/587,027**

(22) Filed: **Dec. 31, 2014**

Related U.S. Application Data

(63) Continuation-in-part of application No. 14/272,179, filed on May 7, 2014, and a continuation-in-part of (Continued)

(51) **Int. Cl.**
H02J 7/02 (2016.01)
H02J 50/20 (2016.01)
H02J 17/00 (2006.01)

(52) **U.S. Cl.**
CPC ***H02J 17/00*** (2013.01); ***H02J 7/025*** (2013.01); ***H02J 50/20*** (2016.02)

(58) **Field of Classification Search**
CPC H02J 50/20
See application file for complete search history.

(56) **References Cited**

U.S. PATENT DOCUMENTS

787,412 A 4/1905 Tesla
3,167,775 A 1/1965 Guertler
(Continued)

FOREIGN PATENT DOCUMENTS

CN 203826555 U 9/2014
CN 104090265 A 10/2014
(Continued)

OTHER PUBLICATIONS

Texas Instuments NPL, Highly Integrated Wireless Receiver (QI (WPC V1.1) Compliant Power Supply, Mar. 2013; Wireless Receiver-Side Communication and Power Monitoring IC for Wireless Power, Dec. 2010.*

(Continued)

Primary Examiner — Fritz M Fleming
(74) *Attorney, Agent, or Firm* — Morgan, Lewis & Bockius LLP

(57) **ABSTRACT**

Embodiments disclosed herein relate to various arrangements of hardware for incorporating receiver functions into wearable portable devices. The embodiments described herein include a transmitter that transmits a power transmission signal (e.g., RF signal waves) to create a three-dimensional pocket of energy. At least one receiver can be connected to or integrated into electronic devices and receive power from the pocket of energy. The transmitter can locate the at least one receiver in a three-dimensional space using a communication medium. The transmitter generates a waveform to create a pocket of energy around each of the at least one receiver. The transmitter uses an algorithm to direct, focus, and control the waveform in three dimensions. The receiver can convert the transmission signals into electricity for powering an electronic device. The embodiments for wireless power transmission can allow powering and charging a plurality of electrical devices without wires.

23 Claims, 23 Drawing Sheets

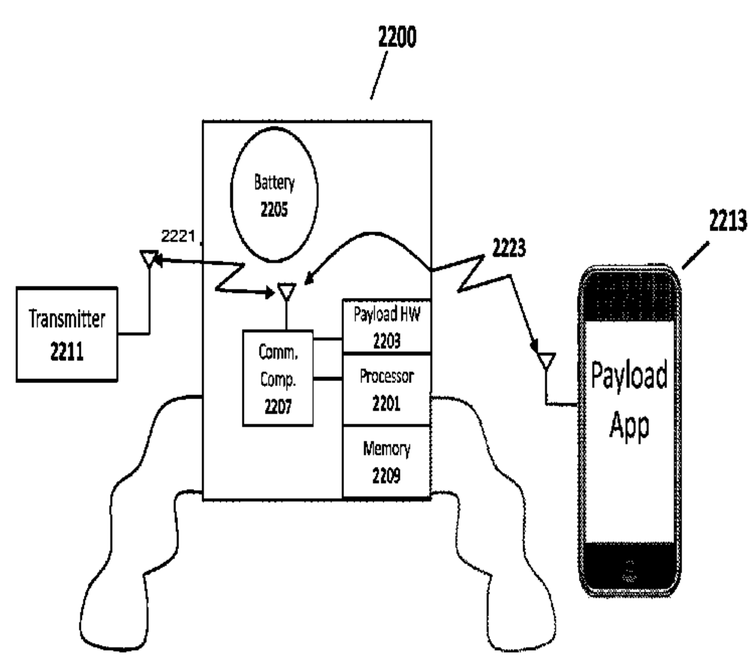

Related U.S. Application Data

application No. 14/272,207, filed on May 7, 2014, now abandoned, and a continuation-in-part of application No. 14/272,247, filed on May 7, 2014, now abandoned, and a continuation-in-part of application No. 14/272,287, filed on May 7, 2014, and a continuation-in-part of application No. 14/272,280, filed on May 7, 2014, now abandoned.

(56) **References Cited**

U.S. PATENT DOCUMENTS

3,434,678 A 3/1969 Brown et al.
3,696,384 A 10/1972 Lester
3,754,269 A 8/1973 Clavin
4,101,895 A 7/1978 Jones, Jr.
4,360,741 A 11/1982 Fitzsimmons et al.
4,944,036 A 7/1990 Hyatt
4,995,010 A 2/1991 Knight
5,200,759 A 4/1993 McGinnis
5,211,471 A 5/1993 Rohrs
5,548,292 A 8/1996 Hirshfield et al.
5,556,749 A 9/1996 Mitsuhashi et al.
5,568,088 A 10/1996 Dent et al.
5,646,633 A 7/1997 Dahlberg
5,697,063 A 12/1997 Kishigami et al.
5,712,642 A 1/1998 Hulderman
5,936,527 A 8/1999 Isaacman et al.
5,982,139 A 11/1999 Parise
6,046,708 A 4/2000 MacDonald, Jr. et al.
6,127,799 A 10/2000 Krishnan
6,127,942 A 10/2000 Welle
6,163,296 A 12/2000 Lier et al.
6,289,237 B1 9/2001 Mickle et al.
6,329,908 B1 12/2001 Frecska
6,421,235 B2 7/2002 Ditzik
6,437,685 B2 8/2002 Hanaki
6,456,253 B1 9/2002 Rummeli et al.
6,476,795 B1 11/2002 Derocher et al.
6,501,414 B2 12/2002 Amdt et al.
6,583,723 B2 6/2003 Watanabe et al.
6,597,897 B2 7/2003 Tang
6,615,074 B2 9/2003 Mickle et al.
6,650,376 B1 11/2003 Obitsu
6,664,920 B1 12/2003 Mott et al.
6,798,716 B1 9/2004 Charych
6,803,744 B1 10/2004 Sabo
6,853,197 B1 2/2005 McFarland
6,856,291 B2 2/2005 Mickle et al.
6,911,945 B2 6/2005 Korva
6,960,968 B2 11/2005 Odendaal et al.
6,967,462 B1 11/2005 Landis
6,988,026 B2 1/2006 Breed et al.
7,003,350 B2 2/2006 Denker et al.
7,027,311 B2 4/2006 Vanderelli et al.
7,068,234 B2 6/2006 Sievenpiper
7,068,991 B2 6/2006 Parise
7,183,748 B1 2/2007 Unno et al.
7,191,013 B1 3/2007 Miranda et al.
7,196,663 B2 3/2007 Bolzer et al.
7,205,749 B2 4/2007 Hagen et al.
7,222,356 B1 5/2007 Yonezawa et al.
7,274,334 B2 9/2007 o'riordan et al.
7,274,336 B2 9/2007 Carson
7,351,975 B2 4/2008 Brady et al.
7,359,730 B2 4/2008 Dennis et al.
7,392,068 B2 6/2008 Dayan
7,403,803 B2 7/2008 Mickle et al.
7,443,057 B2 10/2008 Nunally
7,451,839 B2 11/2008 Perlman
7,463,201 B2 12/2008 Chiang et al.
7,471,247 B2 12/2008 Saily
7,535,195 B1 5/2009 Horovitz et al.
7,614,556 B2 11/2009 Overhultz et al.
7,639,994 B2 12/2009 Greene et al.
7,643,312 B2 1/2010 Vanderelli et al.
7,652,577 B1 1/2010 Madhow et al.
7,679,576 B2 3/2010 Riedel et al.
7,702,771 B2 4/2010 Ewing et al.
7,786,419 B2 8/2010 Hyde et al.
7,812,771 B2 10/2010 Greene et al.
7,830,312 B2 11/2010 Choudhury et al.
7,844,306 B2 11/2010 Shearer et al.
7,868,482 B2 1/2011 Greene et al.
7,898,105 B2 3/2011 Greene et al.
7,904,117 B2 3/2011 Doan et al.
7,911,386 B1 3/2011 Ito et al.
7,925,308 B2 4/2011 Greene et al.
7,948,208 B2 5/2011 Partovi et al.
8,055,003 B2 11/2011 Mittleman et al.
8,070,595 B2 12/2011 Alderucci et al.
8,072,380 B2 12/2011 Crouch
8,092,301 B2 1/2012 Alderucci et al.
8,099,140 B2 1/2012 Arai
8,115,448 B2 2/2012 John
8,159,090 B2 4/2012 Greene et al.
8,159,364 B2 4/2012 Zeine
8,180,286 B2 5/2012 Yamasuge
8,228,194 B2 7/2012 Mickle
8,234,509 B2 7/2012 Gioscia et al.
8,264,101 B2 9/2012 Hyde et al.
8,264,291 B2 9/2012 Morita
8,276,325 B2 10/2012 Clifton et al.
8,278,784 B2 10/2012 Cook et al.
8,284,101 B2 10/2012 Fusco
8,310,201 B1 11/2012 Wright
8,338,991 B2 12/2012 Von Novak et al.
8,362,745 B2 1/2013 Tinaphong
8,380,255 B2 2/2013 Shearer et al.
8,410,953 B2 4/2013 Zeine
8,411,963 B2 4/2013 Luff
8,432,062 B2 4/2013 Greene et al.
8,432,071 B2 4/2013 Huang et al.
8,446,248 B2 5/2013 Zeine
8,447,234 B2 5/2013 Cook et al.
8,451,189 B1 5/2013 Fluhler
8,452,235 B2 5/2013 Kirby et al.
8,457,656 B2 6/2013 Perkins et al.
8,461,817 B2 6/2013 Martin et al.
8,467,733 B2 6/2013 Leabman
8,497,601 B2 7/2013 Hall et al.
8,497,658 B2 7/2013 Von Novak et al.
8,552,597 B2 10/2013 Song et al.
8,558,661 B2 10/2013 Zeine
8,560,026 B2 10/2013 Chanterac
8,604,746 B2 12/2013 Lee
8,614,643 B2 12/2013 Leabman
8,621,245 B2 12/2013 Shearer et al.
8,626,249 B2 1/2014 Kuusilinna et al.
8,629,576 B2 1/2014 Levine
8,653,966 B2 2/2014 Rao et al.
8,674,551 B2 3/2014 Low et al.
8,686,685 B2 4/2014 Moshfeghi
8,712,355 B2 4/2014 Black et al.
8,712,485 B2 4/2014 Tam
8,718,773 B2 5/2014 Wills et al.
8,729,737 B2 5/2014 Schatz et al.
8,736,228 B1 5/2014 Freed et al.
8,760,113 B2 6/2014 Keating
8,770,482 B2 7/2014 Ackermann et al.
8,772,960 B2 7/2014 Yoshida
8,823,319 B2 9/2014 Von Novak, III et al.
8,832,646 B1 9/2014 Wendling
8,854,176 B2 10/2014 Zeine
8,860,364 B2 10/2014 Low et al.
8,897,770 B1 11/2014 Frolov et al.
8,903,456 B2 12/2014 Chu et al.
8,917,057 B2 12/2014 Hui
8,923,189 B2 12/2014 Leabman
8,928,544 B2 1/2015 Massie et al.
8,937,408 B2 1/2015 Ganem et al.
8,946,940 B2 2/2015 Kim et al.
8,963,486 B2 2/2015 Kirby et al.
8,970,070 B2 3/2015 Sada et al.
8,989,053 B1 3/2015 Skaaksrud et al.

(56) **References Cited**

U.S. PATENT DOCUMENTS

9,000,616 B2 4/2015 Greene et al.
9,001,622 B2 4/2015 Perry
9,006,934 B2 4/2015 Kozakai et al.
9,021,277 B2 4/2015 Shearer et al.
9,030,161 B2 5/2015 Lu et al.
9,059,598 B2 6/2015 Kang et al.
9,059,599 B2 6/2015 Won et al.
9,077,188 B2 7/2015 Moshfeghi
9,083,595 B2 7/2015 Rakib et al.
9,088,216 B2 7/2015 Garrity et al.
9,124,125 B2 9/2015 Leabman et al.
9,130,397 B2 9/2015 Leabman et al.
9,130,602 B2 9/2015 Cook
9,142,998 B2 9/2015 Yu et al.
9,143,000 B2 9/2015 Leabman et al.
9,143,010 B2 9/2015 Urano
9,178,389 B2 11/2015 Hwang
9,225,196 B2 12/2015 Huang et al.
9,240,469 B2 1/2016 Sun et al.
9,242,411 B2 1/2016 Kritchman et al.
9,244,500 B2 1/2016 Cain et al.
9,252,628 B2 2/2016 Leabman et al.
9,270,344 B2 2/2016 Rosenberg
9,282,582 B1 3/2016 Dunsbergen et al.
9,294,840 B1 3/2016 Anderson et al.
9,297,896 B1 3/2016 Andrews
9,318,898 B2 4/2016 John
9,368,020 B1 6/2016 Bell et al.
9,401,977 B1 7/2016 Gaw
9,409,490 B2 8/2016 Kawashima
9,438,045 B1 9/2016 Leabman
9,438,046 B1 * 9/2016 Leabman H02J 50/20
9,444,283 B2 9/2016 Son et al.
9,450,449 B1 9/2016 Leabman et al.
9,461,502 B2 10/2016 Lee et al.
9,520,725 B2 12/2016 Masaoka et al.
9,520,748 B2 12/2016 Hyde et al.
9,522,270 B2 12/2016 Perryman et al.
9,537,354 B2 1/2017 Bell et al.
9,537,357 B2 1/2017 Leabman
9,537,358 B2 1/2017 Leabman
9,538,382 B2 1/2017 Bell et al.
9,544,640 B2 1/2017 Lau
9,559,553 B2 1/2017 Bae
9,564,773 B2 2/2017 Pogorelik et al.
9,571,974 B2 2/2017 Choi et al.
9,590,317 B2 3/2017 Zimmerman et al.
9,590,444 B2 3/2017 Walley
9,620,996 B2 4/2017 Zeine
9,647,328 B2 5/2017 Dobric
9,711,999 B2 7/2017 Hietala et al.
9,723,635 B2 8/2017 Nambord et al.
9,793,758 B2 10/2017 Leabman
9,793,764 B2 10/2017 Perry
9,806,564 B2 * 10/2017 Leabman H02J 50/20
9,819,230 B2 * 11/2017 Petras H02J 50/20
9,866,279 B2 1/2018 Bell et al.
9,876,394 B1 * 1/2018 Leabman H02J 50/20
2001/0027876 A1 10/2001 Tsukamoto et al.
2002/0001307 A1 1/2002 Nguyen et al.
2002/0024471 A1 2/2002 Ishitobi
2002/0028655 A1 3/2002 Rosener et al.
2002/0034958 A1 3/2002 Oberschmidt et al.
2002/0054330 A1 5/2002 Jinbo et al.
2002/0065052 A1 5/2002 Pande et al.
2002/0072784 A1 6/2002 Sheppard et al.
2002/0095980 A1 7/2002 Breed et al.
2002/0103447 A1 8/2002 Terry
2002/0133592 A1 9/2002 Matsuda
2002/0172223 A1 11/2002 Stilp
2003/0005759 A1 1/2003 Breed et al.
2003/0058187 A1 3/2003 Billiet et al.
2003/0076274 A1 4/2003 Phelan et al.
2003/0179152 A1 9/2003 Watada et al.
2003/0179573 A1 9/2003 Chun
2003/0192053 A1 10/2003 Sheppard et al.
2004/0019624 A1 1/2004 Sukegawa
2004/0020100 A1 2/2004 O'Brian et al.
2004/0036657 A1 2/2004 Forster et al.
2004/0066251 A1 4/2004 Eleftheriades et al.
2004/0107641 A1 6/2004 Walton et al.
2004/0113543 A1 6/2004 Daniels
2004/0119675 A1 6/2004 Washio et al.
2004/0130425 A1 7/2004 Dayan et al.
2004/0130442 A1 7/2004 Breed
2004/0142733 A1 7/2004 Parise
2004/0145342 A1 7/2004 Lyon
2004/0196190 A1 10/2004 Mendolia et al.
2004/0203979 A1 10/2004 Attar et al.
2004/0207559 A1 10/2004 Milosavljevic
2004/0218759 A1 11/2004 Yacobi
2004/0259604 A1 12/2004 Mickle et al.
2004/0263124 A1 12/2004 Wieck et al.
2005/0007276 A1 1/2005 Barrick et al.
2005/0030118 A1 2/2005 Wang
2005/0046584 A1 3/2005 Breed
2005/0055316 A1 3/2005 Williams
2005/0093766 A1 5/2005 Turner
2005/0116683 A1 6/2005 Cheng
2005/0117660 A1 6/2005 Vialle et al.
2005/0134517 A1 6/2005 Gottl
2005/0171411 A1 8/2005 KenKnight
2005/0198673 A1 9/2005 Kit et al.
2005/0227619 A1 10/2005 Lee et al.
2005/0232469 A1 10/2005 Schofield
2005/0237249 A1 10/2005 Nagel
2005/0237258 A1 10/2005 Abramov et al.
2005/0282591 A1 12/2005 Shaff
2006/0013335 A1 1/2006 Leabman
2006/0019712 A1 1/2006 Choi
2006/0030279 A1 2/2006 Leabman et al.
2006/0033674 A1 2/2006 Essig, Jr. et al.
2006/0071308 A1 4/2006 Tang et al.
2006/0092079 A1 5/2006 de Rochemont
2006/0094425 A1 5/2006 Mickle et al.
2006/0113955 A1 6/2006 Nunally
2006/0119532 A1 6/2006 Yun et al.
2006/0136004 A1 6/2006 Cowan et al.
2006/0160517 A1 7/2006 Yoon
2006/0183473 A1 8/2006 Ukon
2006/0190063 A1 8/2006 Kanzius
2006/0192913 A1 8/2006 Shutou et al.
2006/0199620 A1 9/2006 Greene et al.
2006/0238365 A1 10/2006 Vecchione et al.
2006/0266564 A1 11/2006 Perlman et al.
2006/0266917 A1 11/2006 Baldis et al.
2006/0278706 A1 12/2006 Hatakayama et al.
2006/0284593 A1 12/2006 Nagy et al.
2006/0287094 A1 12/2006 Mahaffey et al.
2007/0007821 A1 1/2007 Rossetti
2007/0019693 A1 1/2007 Graham
2007/0021140 A1 * 1/2007 Keyes, IV H02J 17/00 455/522
2007/0060185 A1 3/2007 Simon et al.
2007/0070490 A1 3/2007 Tsunoda et al.
2007/0090997 A1 4/2007 Brown et al.
2007/0093269 A1 4/2007 Leabman et al.
2007/0097653 A1 5/2007 Gilliland et al.
2007/0103110 A1 5/2007 Sagoo
2007/0106894 A1 5/2007 Zhang
2007/0109121 A1 5/2007 Cohen
2007/0139000 A1 6/2007 Kozuma
2007/0149162 A1 6/2007 Greene et al.
2007/0164868 A1 7/2007 Deavours et al.
2007/0173196 A1 7/2007 Gallic
2007/0173214 A1 7/2007 Mickle et al.
2007/0178857 A1 8/2007 Greene et al.
2007/0178945 A1 * 8/2007 Cook H02J 50/20 455/572
2007/0182367 A1 8/2007 Partovi
2007/0191074 A1 8/2007 Harrist et al.
2007/0191075 A1 8/2007 Greene et al.
2007/0197281 A1 8/2007 Stronach
2007/0210960 A1 9/2007 Rofougaran et al.

(56) **References Cited**

U.S. PATENT DOCUMENTS

2007/0222681 A1 9/2007 Greene et al.
2007/0257634 A1 11/2007 Leschin et al.
2007/0273486 A1 11/2007 Shiotsu
2007/0296639 A1 12/2007 Hook et al.
2007/0298846 A1 12/2007 Greene et al.
2008/0014897 A1* 1/2008 Cook H02J 50/20 455/343.1
2008/0024376 A1 1/2008 Norris et al.
2008/0048917 A1 2/2008 Achour et al.
2008/0062062 A1 3/2008 Borau et al.
2008/0062255 A1 3/2008 Gal
2008/0067874 A1 3/2008 Tseng
2008/0074324 A1 3/2008 Puzella et al.
2008/0089277 A1 4/2008 Aledander et al.
2008/0110263 A1 5/2008 Klessel et al.
2008/0113816 A1 5/2008 Mahaffey et al.
2008/0122297 A1 5/2008 Arai
2008/0123383 A1 5/2008 Shionoiri
2008/0129536 A1 6/2008 Randall et al.
2008/0140278 A1 6/2008 Breed
2008/0169910 A1 7/2008 Greene et al.
2008/0197802 A1 8/2008 Onishi
2008/0204342 A1 8/2008 Kharadly
2008/0204350 A1 8/2008 Tam et al.
2008/0210762 A1 9/2008 Osada et al.
2008/0211458 A1 9/2008 Lawther et al.
2008/0233890 A1 9/2008 Baker
2008/0248758 A1 10/2008 Schedelbeck et al.
2008/0248846 A1 10/2008 Stronach et al.
2008/0258993 A1 10/2008 Gummalla et al.
2008/0266191 A1 10/2008 Hilgers
2008/0278378 A1 11/2008 Chang et al.
2008/0309452 A1 12/2008 Zeine
2009/0002493 A1 1/2009 Kates
2009/0019183 A1 1/2009 Wu et al.
2009/0036065 A1 2/2009 Siu
2009/0047998 A1 2/2009 Alberth, Jr.
2009/0058354 A1 3/2009 Harrison
2009/0058361 A1 3/2009 John
2009/0058731 A1 3/2009 Geary et al.
2009/0067208 A1 3/2009 Martin et al.
2009/0096412 A1 4/2009 Huang
2009/0096413 A1 4/2009 Partovi
2009/0102292 A1 4/2009 Cook et al.
2009/0102296 A1 4/2009 Greene et al.
2009/0108679 A1 4/2009 Porwal
2009/0122847 A1 5/2009 Nysen et al.
2009/0128262 A1 5/2009 Lee et al.
2009/0157911 A1 6/2009 Aihara
2009/0200985 A1 8/2009 Zane et al.
2009/0206791 A1 8/2009 Jung
2009/0207090 A1 8/2009 Pettus et al.
2009/0207092 A1 8/2009 Nysen et al.
2009/0218884 A1 9/2009 Soar
2009/0218891 A1 9/2009 McCollough
2009/0219903 A1 9/2009 Alamouti et al.
2009/0243397 A1 10/2009 Cook et al.
2009/0264069 A1 10/2009 Yamasuge
2009/0280866 A1 11/2009 Lo et al.
2009/0281678 A1 11/2009 Wakamatsu
2009/0284082 A1 11/2009 Mohammadian
2009/0284083 A1 11/2009 Karalis et al.
2009/0284220 A1 11/2009 Toncich et al.
2009/0284227 A1 11/2009 Mohammadian et al.
2009/0284325 A1 11/2009 Rossiter et al.
2009/0286475 A1 11/2009 Toncich et al.
2009/0291634 A1 11/2009 Saarisalo
2009/0299175 A1 12/2009 Bernstein et al.
2009/0312046 A1 12/2009 Clevenger et al.
2009/0315412 A1 12/2009 Yamamoto et al.
2009/0322281 A1 12/2009 Kamijo et al.
2010/0001683 A1 1/2010 Huang et al.
2010/0007307 A1 1/2010 Baarman et al.
2010/0007569 A1 1/2010 Sim et al.
2010/0019686 A1 1/2010 Gutierrez, Jr.
2010/0019908 A1 1/2010 Cho et al.
2010/0026605 A1 2/2010 Yang et al.
2010/0027379 A1 2/2010 Saulnier et al.
2010/0029383 A1 2/2010 Dai
2010/0033021 A1 2/2010 Bennett
2010/0033390 A1 2/2010 Alamouti et al.
2010/0034238 A1 2/2010 Bennett
2010/0041453 A1 2/2010 Grimm, Jr.
2010/0044123 A1 2/2010 Perlman et al.
2010/0054200 A1 3/2010 Tsai
2010/0060534 A1 3/2010 Oodachi
2010/0066631 A1 3/2010 Puzella et al.
2010/0075607 A1 3/2010 Hosoya
2010/0082193 A1 4/2010 Chiappetta
2010/0087227 A1 4/2010 Francos et al.
2010/0090524 A1 4/2010 Obayashi
2010/0090656 A1 4/2010 Shearer et al.
2010/0109443 A1 5/2010 Cook et al.
2010/0117926 A1 5/2010 DeJean, II
2010/0119234 A1 5/2010 Suematsu et al.
2010/0123618 A1 5/2010 Martin et al.
2010/0123624 A1 5/2010 Minear et al.
2010/0127660 A1 5/2010 Cook et al.
2010/0142418 A1 6/2010 Nishioka et al.
2010/0142509 A1 6/2010 Zhu et al.
2010/0148723 A1 6/2010 Cook et al.
2010/0151808 A1 6/2010 Toncich et al.
2010/0156721 A1 6/2010 Alamouti et al.
2010/0156741 A1 6/2010 Vazquez et al.
2010/0164296 A1 7/2010 Kurs et al.
2010/0164433 A1 7/2010 Janefalker et al.
2010/0171461 A1 7/2010 Baarman et al.
2010/0174629 A1 7/2010 Taylor et al.
2010/0176934 A1 7/2010 Chou et al.
2010/0181961 A1 7/2010 Novak et al.
2010/0181964 A1 7/2010 Huggins et al.
2010/0194206 A1 8/2010 Burdo et al.
2010/0201189 A1 8/2010 Kirby et al.
2010/0201201 A1 8/2010 Mobarhan et al.
2010/0201314 A1 8/2010 Toncich et al.
2010/0207572 A1 8/2010 Kirby et al.
2010/0210233 A1 8/2010 Cook et al.
2010/0213895 A1 8/2010 Keating et al.
2010/0214177 A1 8/2010 Parsche
2010/0222010 A1* 9/2010 Ozaki H02J 50/80 455/77
2010/0225270 A1 9/2010 Jacobs et al.
2010/0227570 A1 9/2010 Hendin
2010/0231470 A1 9/2010 Lee et al.
2010/0237709 A1 9/2010 Hall et al.
2010/0244576 A1 9/2010 Hillan et al.
2010/0256831 A1 10/2010 Abramo et al.
2010/0259110 A1 10/2010 Kurs et al.
2010/0259447 A1 10/2010 Crouch
2010/0264747 A1 10/2010 Hall et al.
2010/0277003 A1 11/2010 Von Novak et al.
2010/0277121 A1 11/2010 Hall et al.
2010/0279606 A1 11/2010 Hillan et al.
2010/0289341 A1 11/2010 Ozaki et al.
2010/0295372 A1 11/2010 Hyde et al.
2010/0308767 A1 12/2010 Rofougaran et al.
2010/0309079 A1 12/2010 Rofougaran et al.
2010/0309088 A1 12/2010 Hyvonen et al.
2010/0315045 A1 12/2010 Zeine
2010/0316163 A1 12/2010 Forenza et al.
2010/0327766 A1 12/2010 Recker et al.
2010/0328044 A1 12/2010 Waffenschmidt et al.
2010/0332401 A1 12/2010 Prahlad et al.
2011/0013198 A1 1/2011 Shirley
2011/0018360 A1 1/2011 Baarman et al.
2011/0028114 A1 2/2011 Kerselaers
2011/0031928 A1 2/2011 Soar
2011/0032149 A1 2/2011 Leabman
2011/0032866 A1 2/2011 Leabman
2011/0034190 A1 2/2011 Leabman
2011/0034191 A1 2/2011 Leabman
2011/0043047 A1 2/2011 Karalis et al.
2011/0043163 A1 2/2011 Baarman et al.
2011/0043327 A1 2/2011 Baarman et al.

(56) **References Cited**

U.S. PATENT DOCUMENTS

2011/0050166	A1	3/2011	Cook et al.
2011/0055037	A1	3/2011	Hayashigawa et al.
2011/0056215	A1	3/2011	Ham
2011/0057607	A1	3/2011	Carobolante
2011/0062788	A1	3/2011	Chen et al.
2011/0074342	A1	3/2011	MacLaughlin
2011/0074349	A1	3/2011	Ghovanloo
2011/0074620	A1	3/2011	Wintermantel
2011/0090126	A1	4/2011	Szini et al.
2011/0109167	A1	5/2011	Park et al.
2011/0114401	A1	5/2011	Kanno et al.
2011/0115303	A1	5/2011	Baarman et al.
2011/0115432	A1	5/2011	El-Maleh
2011/0115605	A1	5/2011	Dimig et al.
2011/0121660	A1	5/2011	Azancot et al.
2011/0122018	A1	5/2011	Tarng et al.
2011/0122026	A1	5/2011	DeLaquil et al.
2011/0127845	A1	6/2011	Walley et al.
2011/0127952	A1	6/2011	Walley et al.
2011/0133655	A1	6/2011	Recker et al.
2011/0133691	A1	6/2011	Hautanen
2011/0148578	A1	6/2011	Aloi et al.
2011/0151789	A1	6/2011	Viglione et al.
2011/0154429	A1	6/2011	Stantchev
2011/0156494	A1	6/2011	Mashinsky
2011/0156640	A1	6/2011	Moshfeghi
2011/0163128	A1	7/2011	Taguchi et al.
2011/0175455	A1	7/2011	Hashiguchi
2011/0175461	A1	7/2011	Tinaphong
2011/0181120	A1	7/2011	Liu et al.
2011/0182245	A1	7/2011	Malkamaki et al.
2011/0184842	A1	7/2011	Melen
2011/0188207	A1	8/2011	Won et al.
2011/0194543	A1	8/2011	Zhao et al.
2011/0195722	A1	8/2011	Walter et al.
2011/0199046	A1	8/2011	Tsai et al.
2011/0215086	A1	9/2011	Yeh
2011/0217923	A1	9/2011	Ma
2011/0220634	A1	9/2011	Yeh
2011/0221389	A1	9/2011	Won et al.
2011/0222272	A1	9/2011	Yeh
2011/0243040	A1	10/2011	Khan et al.
2011/0243050	A1	10/2011	Yanover
2011/0244913	A1	10/2011	Kim et al.
2011/0248573	A1	10/2011	Kanno et al.
2011/0248575	A1	10/2011	Kim et al.
2011/0249678	A1	10/2011	Bonicatto
2011/0254377	A1	10/2011	Widmer et al.
2011/0254503	A1	10/2011	Widmer et al.
2011/0259953	A1	10/2011	Baarman et al.
2011/0273977	A1	11/2011	Shapira et al.
2011/0278941	A1	11/2011	Krishna et al.
2011/0279226	A1	11/2011	Chen et al.
2011/0281535	A1	11/2011	Low et al.
2011/0282415	A1	11/2011	Eckhoff et al.
2011/0285213	A1	11/2011	Kowalewski
2011/0286374	A1	11/2011	Shin et al.
2011/0291489	A1	12/2011	Tsai et al.
2011/0302078	A1	12/2011	Failing
2011/0304216	A1	12/2011	Baarman
2011/0304437	A1	12/2011	Beeler
2011/0304521	A1	12/2011	Ando et al.
2012/0013196	A1	1/2012	Kim et al.
2012/0013198	A1	1/2012	Uramoto et al.
2012/0013296	A1	1/2012	Heydari et al.
2012/0019419	A1	1/2012	Prat et al.
2012/0043887	A1	2/2012	Mesibov
2012/0051109	A1	3/2012	Kim et al.
2012/0051294	A1	3/2012	Guillouard
2012/0056486	A1	3/2012	Endo et al.
2012/0056741	A1	3/2012	Zhu et al.
2012/0068906	A1	3/2012	Asher et al.
2012/0074891	A1	3/2012	Anderson et al.
2012/0080957	A1	4/2012	Cooper et al.
2012/0086284	A1	4/2012	Capanella et al.
2012/0095617	A1	4/2012	Martin et al.
2012/0098350	A1	4/2012	Campanella et al.
2012/0098485	A1	4/2012	Kang et al.
2012/0099675	A1	4/2012	Kitamura et al.
2012/0103562	A1	5/2012	Clayton
2012/0104849	A1	5/2012	Jackson
2012/0105252	A1	5/2012	Wang
2012/0112532	A1	5/2012	Kesler et al.
2012/0119914	A1	5/2012	Uchida
2012/0126743	A1	5/2012	Rivers, Jr.
2012/0132647	A1	5/2012	Beverly et al.
2012/0133214	A1	5/2012	Yun et al.
2012/0146426	A1	6/2012	Sabo
2012/0146576	A1	6/2012	Partovi
2012/0146577	A1	6/2012	Tanabe
2012/0147802	A1	6/2012	Ukita et al.
2012/0149307	A1	6/2012	Terada et al.
2012/0150670	A1	6/2012	Taylor et al.
2012/0153894	A1	6/2012	Widmer et al.
2012/0157019	A1	6/2012	Li
2012/0161531	A1	6/2012	Kim et al.
2012/0161544	A1	6/2012	Kashiwagi et al.
2012/0169276	A1	7/2012	Wang
2012/0169278	A1	7/2012	Choi
2012/0173418	A1	7/2012	Beardsmore et al.
2012/0179004	A1	7/2012	Roesicke et al.
2012/0181973	A1	7/2012	Lyden
2012/0182427	A1	7/2012	Marshall
2012/0187851	A1	8/2012	Huggins et al.
2012/0193999	A1	8/2012	Zeine
2012/0200399	A1	8/2012	Chae
2012/0201153	A1	8/2012	Bharadia et al.
2012/0201173	A1	8/2012	Jian et al.
2012/0206299	A1	8/2012	Valdes-Garcia
2012/0212072	A1	8/2012	Miyabayashi et al.
2012/0214462	A1	8/2012	Chu et al.
2012/0214536	A1	8/2012	Kim et al.
2012/0228956	A1	9/2012	Kamata
2012/0231856	A1	9/2012	Lee et al.
2012/0235636	A1	9/2012	Partovi
2012/0242283	A1	9/2012	Kim et al.
2012/0248886	A1	10/2012	Kesler et al.
2012/0248888	A1	10/2012	Kesler et al.
2012/0248891	A1	10/2012	Drennen
2012/0249051	A1	10/2012	Son et al.
2012/0262002	A1	10/2012	Widmer et al.
2012/0265272	A1	10/2012	Judkins
2012/0267900	A1	10/2012	Huffman et al.
2012/0268238	A1	10/2012	Park et al.
2012/0274154	A1	11/2012	DeLuca
2012/0280650	A1	11/2012	Kim et al.
2012/0286582	A1	11/2012	Kim et al.
2012/0292993	A1	11/2012	Mettler et al.
2012/0293021	A1	11/2012	Teggatz et al.
2012/0293119	A1	11/2012	Park et al.
2012/0299389	A1	11/2012	Lee et al.
2012/0299540	A1	11/2012	Perry
2012/0299541	A1	11/2012	Perry
2012/0299542	A1	11/2012	Perry
2012/0300588	A1	11/2012	Perry
2012/0300592	A1	11/2012	Perry
2012/0300593	A1	11/2012	Perry
2012/0306705	A1	12/2012	Sakurai et al.
2012/0306707	A1	12/2012	Yang et al.
2012/0306720	A1	12/2012	Tanmi et al.
2012/0309295	A1	12/2012	Maguire
2012/0309308	A1	12/2012	Kim et al.
2012/0309332	A1	12/2012	Liao
2012/0313449	A1	12/2012	Kurs
2012/0313835	A1	12/2012	Gebretnsae
2012/0326660	A1	12/2012	Lu et al.
2013/0002550	A1	1/2013	Zalewski
2013/0024059	A1	1/2013	Miller et al.
2013/0026981	A1	1/2013	Van Der Lee
2013/0026982	A1	1/2013	Rothenbaum
2013/0032589	A1	2/2013	Chung
2013/0033571	A1	2/2013	Steen
2013/0038124	A1	2/2013	Newdoll et al.
2013/0038402	A1	2/2013	Karalis et al.

(56) **References Cited**

U.S. PATENT DOCUMENTS

2013/0043738 A1 2/2013 Park et al.
2013/0044035 A1 2/2013 Zhuang
2013/0049471 A1 2/2013 Oleynik
2013/0049475 A1 2/2013 Kim et al.
2013/0049484 A1 2/2013 Weissentern et al.
2013/0057078 A1 3/2013 Lee
2013/0057205 A1 3/2013 Lee et al.
2013/0057210 A1 3/2013 Negaard et al.
2013/0057364 A1 3/2013 Kesler et al.
2013/0063082 A1 3/2013 Lee et al.
2013/0063143 A1 3/2013 Adalsteinsson et al.
2013/0069444 A1 3/2013 Waffenschmidt et al.
2013/0077650 A1 3/2013 Traxler et al.
2013/0078918 A1 3/2013 Crowley et al.
2013/0082651 A1 4/2013 Park et al.
2013/0082653 A1 4/2013 Lee et al.
2013/0083774 A1 4/2013 Son et al.
2013/0088082 A1 4/2013 Kang et al.
2013/0088090 A1 4/2013 Wu
2013/0088192 A1 4/2013 Eaton
2013/0088331 A1 4/2013 Cho
2013/0093388 A1 4/2013 Partovi
2013/0099389 A1 4/2013 Hong et al.
2013/0099586 A1 4/2013 Kato
2013/0106197 A1 5/2013 Bae et al.
2013/0107023 A1 5/2013 Tanaka et al.
2013/0119777 A1 5/2013 Rees
2013/0119929 A1 5/2013 Partovi
2013/0120217 A1 5/2013 Ueda et al.
2013/0132010 A1 5/2013 Winger et al.
2013/0134923 A1 5/2013 Smith
2013/0137455 A1 5/2013 Xia
2013/0141037 A1 6/2013 Jenwatanavet et al.
2013/0148341 A1 6/2013 Williams
2013/0149975 A1 6/2013 Yu et al.
2013/0154387 A1 6/2013 Lee et al.
2013/0155748 A1 6/2013 Sundstrom
2013/0157729 A1 6/2013 Tabe
2013/0162335 A1* 6/2013 Kim H02M 3/07 327/536
2013/0169061 A1 7/2013 Microshnichenko et al.
2013/0169219 A1 7/2013 Gray
2013/0169348 A1 7/2013 Shi
2013/0171939 A1 7/2013 Tian et al.
2013/0175877 A1 7/2013 Abe et al.
2013/0178253 A1 7/2013 Karaoguz
2013/0181881 A1 7/2013 Christie et al.
2013/0190031 A1 7/2013 Persson et al.
2013/0193769 A1 8/2013 Mehta et al.
2013/0197320 A1 8/2013 Albert et al.
2013/0200064 A1 8/2013 Alexander
2013/0207477 A1 8/2013 Nam et al.
2013/0207604 A1 8/2013 Zeine
2013/0207879 A1 8/2013 Rada et al.
2013/0210357 A1 8/2013 Qin et al.
2013/0221757 A1 8/2013 Cho et al.
2013/0234530 A1 9/2013 Miyauchi
2013/0234536 A1 9/2013 Chemishkian et al.
2013/0234658 A1 9/2013 Endo et al.
2013/0241306 A1 9/2013 Aber et al.
2013/0241468 A1 9/2013 Moshfeghi
2013/0241474 A1 9/2013 Moshfeghi
2013/0249478 A1 9/2013 Hirano
2013/0249479 A1 9/2013 Partovi
2013/0254578 A1 9/2013 Huang et al.
2013/0264997 A1 10/2013 Lee et al.
2013/0268782 A1 10/2013 Tam et al.
2013/0270923 A1 10/2013 Cook et al.
2013/0278209 A1 10/2013 Von Novak
2013/0285477 A1 10/2013 Lo et al.
2013/0285606 A1 10/2013 Ben-Shalom et al.
2013/0288600 A1 10/2013 Kuusilinna et al.
2013/0293423 A1 11/2013 Moshfeghi
2013/0307751 A1 11/2013 Yu-Juin et al.
2013/0310020 A1 11/2013 Kazuhiro
2013/0311798 A1 11/2013 Sultenfuss
2013/0328417 A1 12/2013 Takeuchi
2013/0334883 A1 12/2013 Kim et al.
2013/0339108 A1 12/2013 Ryder et al.
2013/0343251 A1 12/2013 Zhang
2014/0001846 A1 1/2014 Mosebrook
2014/0001875 A1 1/2014 Nahidipour
2014/0001876 A1 1/2014 Fujiwara et al.
2014/0006017 A1 1/2014 Sen
2014/0008992 A1 1/2014 Leabman
2014/0008993 A1 1/2014 Leabman
2014/0009108 A1 1/2014 Leabman
2014/0009110 A1 1/2014 Lee
2014/0011531 A1 1/2014 Burstrom et al.
2014/0015336 A1 1/2014 Weber et al.
2014/0015344 A1 1/2014 Mohamadi
2014/0021907 A1 1/2014 Yu et al.
2014/0021908 A1 1/2014 McCool
2014/0035524 A1 2/2014 Zeine
2014/0035526 A1 2/2014 Tripathi et al.
2014/0035786 A1 2/2014 Ley
2014/0043248 A1 2/2014 Yeh
2014/0049422 A1 2/2014 Von Novak et al.
2014/0054971 A1 2/2014 Kissin
2014/0055098 A1 2/2014 Lee et al.
2014/0057618 A1 2/2014 Zirwas et al.
2014/0062395 A1 3/2014 Kwon et al.
2014/0082435 A1 3/2014 Kitgawa
2014/0086125 A1 3/2014 Polo et al.
2014/0086592 A1 3/2014 Nakahara et al.
2014/0091756 A1 4/2014 Ofstein et al.
2014/0091968 A1 4/2014 Harel et al.
2014/0103869 A1 4/2014 Radovic
2014/0111147 A1 4/2014 Soar
2014/0113689 A1 4/2014 Lee
2014/0117946 A1 5/2014 Muller et al.
2014/0118140 A1 5/2014 Amis
2014/0128107 A1 5/2014 An
2014/0132210 A1 5/2014 Partovi
2014/0133279 A1 5/2014 Khuri-Yakub
2014/0139034 A1 5/2014 Sankar et al.
2014/0139039 A1 5/2014 Cook et al.
2014/0139180 A1 5/2014 Kim et al.
2014/0141838 A1 5/2014 Cai et al.
2014/0142876 A1 5/2014 John et al.
2014/0143933 A1 5/2014 Low et al.
2014/0145879 A1 5/2014 Pan
2014/0145884 A1 5/2014 Dang et al.
2014/0152117 A1 6/2014 Sanker
2014/0159651 A1 6/2014 Von Novak et al.
2014/0159652 A1 6/2014 Hall et al.
2014/0159662 A1 6/2014 Furui
2014/0169385 A1 6/2014 Hadani et al.
2014/0175893 A1 6/2014 Sengupta et al.
2014/0176054 A1 6/2014 Porat et al.
2014/0176061 A1 6/2014 Cheatham, III et al.
2014/0177399 A1 6/2014 Teng et al.
2014/0184148 A1 7/2014 Van Der Lee et al.
2014/0184155 A1 7/2014 Cha
2014/0184163 A1 7/2014 Das et al.
2014/0184170 A1 7/2014 Jeong
2014/0191568 A1 7/2014 Partovi
2014/0194092 A1 7/2014 Wanstedt et al.
2014/0194095 A1 7/2014 Wanstedt et al.
2014/0206384 A1 7/2014 Kim et al.
2014/0210281 A1 7/2014 Ito et al.
2014/0217955 A1 8/2014 Lin
2014/0217967 A1 8/2014 Zeine et al.
2014/0225805 A1 8/2014 Pan et al.
2014/0232320 A1 8/2014 Ento July et al.
2014/0232610 A1 8/2014 Shigemoto et al.
2014/0239733 A1 8/2014 Mach et al.
2014/0241231 A1 8/2014 Zeine
2014/0245036 A1 8/2014 Oishi
2014/0246416 A1 9/2014 White
2014/0247152 A1 9/2014 Proud
2014/0252813 A1 9/2014 Lee et al.
2014/0252866 A1 9/2014 Walsh et al.
2014/0265725 A1 9/2014 Angle et al.

(56) **References Cited**

U.S. PATENT DOCUMENTS

2014/0265727 A1 9/2014 Berte
2014/0265943 A1 9/2014 Angle et al.
2014/0266025 A1 9/2014 Jakubowski
2014/0273892 A1 9/2014 Nourbakhsh
2014/0281655 A1 9/2014 Angle et al.
2014/0292090 A1 10/2014 Cordeiro et al.
2014/0300452 A1 10/2014 Rofe et al.
2014/0312706 A1 10/2014 Fiorello et al.
2014/0325218 A1 10/2014 Shimizu et al.
2014/0327320 A1 11/2014 Muhs et al.
2014/0327390 A1 11/2014 Park et al.
2014/0346860 A1 11/2014 Aubry et al.
2014/0354063 A1 12/2014 Leabman et al.
2014/0354221 A1 12/2014 Leabman et al.
2014/0355718 A1 12/2014 Guan et al.
2014/0368048 A1 12/2014 Leabman et al.
2014/0368161 A1 12/2014 Leabman et al.
2014/0368405 A1 12/2014 Ek et al.
2014/0375139 A1 12/2014 Tsukamoto
2014/0375253 A1 12/2014 Leabman et al.
2014/0375255 A1 12/2014 Leabman et al.
2014/0375258 A1 12/2014 Arkhipenkov
2014/0375261 A1 12/2014 Manova-Elssibony et al.
2014/0376646 A1 12/2014 Leabman et al.
2015/0001949 A1 1/2015 Leabman et al.
2015/0002086 A1 1/2015 Matos et al.
2015/0003207 A1 1/2015 Lee et al.
2015/0008980 A1 1/2015 Kim et al.
2015/0011160 A1 1/2015 Uurgovan et al.
2015/0015180 A1 1/2015 Miller et al.
2015/0015182 A1 1/2015 Brandtman et al.
2015/0015192 A1 1/2015 Leabamn
2015/0015194 A1 1/2015 Leabman et al.
2015/0015195 A1 1/2015 Leabman et al.
2015/0021990 A1 1/2015 Myer et al.
2015/0022008 A1 1/2015 Leabman et al.
2015/0022009 A1 1/2015 Leabman et al.
2015/0022010 A1 1/2015 Leabman et al.
2015/0023204 A1 1/2015 Wil et al.
2015/0028688 A1 1/2015 Masaoka
2015/0028694 A1 1/2015 Leabman et al.
2015/0028697 A1 1/2015 Leabman et al.
2015/0028875 A1 1/2015 Irie et al.
2015/0029397 A1 1/2015 Leabman et al.
2015/0035378 A1 2/2015 Calhoun et al.
2015/0035715 A1 2/2015 Kim et al.
2015/0041459 A1 2/2015 Leabman et al.
2015/0042264 A1 2/2015 Leabman et al.
2015/0042265 A1 2/2015 Leabman et al.
2015/0044977 A1 2/2015 Ramasamy et al.
2015/0046526 A1 2/2015 Bush et al.
2015/0061404 A1 3/2015 Lamenza et al.
2015/0076917 A1 3/2015 Leabman et al.
2015/0076927 A1 3/2015 Leabman et al.
2015/0077036 A1 3/2015 Leabman et al.
2015/0077037 A1 3/2015 Leabman et al.
2015/0091520 A1 4/2015 Blum et al.
2015/0091706 A1 4/2015 Chemishkian et al.
2015/0097663 A1 4/2015 Sloo et al.
2015/0102681 A1 4/2015 Leabman et al.
2015/0102764 A1 4/2015 Leabman et al.
2015/0102769 A1 4/2015 Leabman et al.
2015/0102973 A1 4/2015 Hand et al.
2015/0108848 A1 4/2015 Joehren
2015/0109181 A1 4/2015 Hyde et al.
2015/0115877 A1 4/2015 Aria et al.
2015/0115878 A1 4/2015 Park
2015/0123483 A1 5/2015 Leabman et al.
2015/0123496 A1 5/2015 Leabman et al.
2015/0128733 A1 5/2015 Taylor et al.
2015/0130285 A1 5/2015 Leabman et al.
2015/0130293 A1 5/2015 Hajimiri et al.
2015/0148664 A1 5/2015 Stolka et al.
2015/0155737 A1 6/2015 Mayo
2015/0155738 A1 6/2015 Leabman et al.
2015/0162751 A1 6/2015 Leabman et al.
2015/0162779 A1 6/2015 Lee et al.
2015/0171513 A1 6/2015 Chen et al.
2015/0171656 A1 6/2015 Leabman et al.
2015/0171658 A1 6/2015 Manova-Elssibony et al.
2015/0171931 A1 6/2015 Won et al.
2015/0177326 A1 6/2015 Chakraborty et al.
2015/0180133 A1 6/2015 Hunt
2015/0188352 A1 7/2015 Peek et al.
2015/0199665 A1 7/2015 Chu
2015/0207333 A1 7/2015 Baarman et al.
2015/0207542 A1 7/2015 Zeine
2015/0222126 A1 8/2015 Leabman et al.
2015/0236520 A1 8/2015 Baarman
2015/0244070 A1 8/2015 Cheng et al.
2015/0244187 A1 8/2015 Horie
2015/0244341 A1 8/2015 Ritter et al.
2015/0249484 A1 9/2015 Mach et al.
2015/0255989 A1 9/2015 Walley et al.
2015/0256097 A1* 9/2015 Gudan H02J 50/20 363/125
2015/0263534 A1 9/2015 Lee et al.
2015/0263548 A1 9/2015 Cooper
2015/0270741 A1 9/2015 Leabman et al.
2015/0280484 A1 10/2015 Radziemski et al.
2015/0288438 A1 10/2015 Maltsev et al.
2015/0311585 A1 10/2015 Church et al.
2015/0312721 A1 10/2015 Singh
2015/0318729 A1 11/2015 Leabman
2015/0326024 A1 11/2015 Bell et al.
2015/0326025 A1 11/2015 Bell et al.
2015/0326063 A1 11/2015 Leabman et al.
2015/0326068 A1 11/2015 Bell et al.
2015/0326069 A1 11/2015 Petras et al.
2015/0326070 A1 11/2015 Petras et al.
2015/0326072 A1 11/2015 Petras et al.
2015/0326142 A1 11/2015 Petras et al.
2015/0326143 A1 11/2015 Petras et al.
2015/0327085 A1 11/2015 Hadani
2015/0333528 A1 11/2015 Leabman
2015/0333529 A1 11/2015 Leabman
2015/0333573 A1 11/2015 Leabman
2015/0333800 A1 11/2015 Perry et al.
2015/0340759 A1 11/2015 Bridgelall et al.
2015/0340903 A1 11/2015 Bell et al.
2015/0340909 A1 11/2015 Bell et al.
2015/0340910 A1 11/2015 Petras et al.
2015/0340911 A1 11/2015 Bell et al.
2015/0341087 A1 11/2015 Moore et al.
2015/0349574 A1 12/2015 Leabman
2015/0358222 A1 12/2015 Berger et al.
2015/0365137 A1 12/2015 Miller et al.
2015/0365138 A1 12/2015 Miller et al.
2016/0005068 A1 1/2016 Im et al.
2016/0012695 A1 1/2016 Bell et al.
2016/0013656 A1 1/2016 Bell et al.
2016/0013677 A1 1/2016 Bell et al.
2016/0013678 A1 1/2016 Bell et al.
2016/0013855 A1 1/2016 Campos
2016/0020636 A1 1/2016 Khlat
2016/0020649 A1 1/2016 Bell et al.
2016/0020830 A1 1/2016 Bell et al.
2016/0042206 A1 2/2016 Pesavento et al.
2016/0054395 A1 2/2016 Bell et al.
2016/0054396 A1 2/2016 Bell et al.
2016/0054440 A1 2/2016 Younis
2016/0056635 A1 2/2016 Bell
2016/0056640 A1 2/2016 Mao
2016/0056669 A1 2/2016 Bell
2016/0056966 A1 2/2016 Bell
2016/0065005 A1 3/2016 Won et al.
2016/0079799 A1 3/2016 Khlat
2016/0087483 A1 3/2016 Hietala et al.
2016/0094091 A1 3/2016 Shin et al.
2016/0094092 A1 3/2016 Davlantes et al.
2016/0099601 A1 4/2016 Leabman et al.
2016/0099602 A1 4/2016 Leabman et al.
2016/0099609 A1 4/2016 Leabman et al.
2016/0099610 A1 4/2016 Leabman et al.

(56) **References Cited**

U.S. PATENT DOCUMENTS

2016/0099611	A1	4/2016	Leabman et al.
2016/0099612	A1	4/2016	Leabman et al.
2016/0099613	A1	4/2016	Leabman et al.
2016/0099614	A1	4/2016	Leabman et al.
2016/0099755	A1	4/2016	Leabman et al.
2016/0099756	A1	4/2016	Leabman et al.
2016/0099757	A1	4/2016	Leabman et al.
2016/0099758	A1	4/2016	Leabman et al.
2016/0100124	A1	4/2016	Leabman et al.
2016/0100312	A1	4/2016	Bell et al.
2016/0126752	A1	5/2016	Vuori et al.
2016/0126776	A1	5/2016	Kim et al.
2016/0141908	A1	5/2016	Jakl et al.
2016/0164563	A1	6/2016	Khawand et al.
2016/0181849	A1	6/2016	Govindaraj
2016/0181854	A1	6/2016	Leabman
2016/0181867	A1	6/2016	Daniel et al.
2016/0181873	A1	6/2016	Mitcheson et al.
2016/0191121	A1	6/2016	Bell
2016/0204622	A1	7/2016	Leabman
2016/0204642	A1	7/2016	Oh
2016/0238365	A1	8/2016	Wixey et al.
2016/0299210	A1	10/2016	Zeine
2016/0323000	A1	11/2016	Liu et al.
2016/0336804	A1	11/2016	Son et al.
2016/0339258	A1	11/2016	Perryman et al.
2016/0359367	A1	12/2016	Rothschild
2016/0380464	A1	12/2016	Chin et al.
2017/0005481	A1	1/2017	Von Novak, III
2017/0005516	A9	1/2017	Leabman et al.
2017/0005524	A1	1/2017	Akuzawa et al.
2017/0005530	A1	1/2017	Zeine et al.
2017/0025903	A1	1/2017	Song et al.
2017/0026087	A1	1/2017	Tanabe
2017/0043675	A1	2/2017	Jones et al.
2017/0047784	A1	2/2017	Jung et al.
2017/0077735	A1	3/2017	Leabman
2017/0077736	A1	3/2017	Leabman
2017/0077764	A1	3/2017	Bell et al.
2017/0077765	A1	3/2017	Bell et al.
2017/0077995	A1	3/2017	Leabman
2017/0085120	A1	3/2017	Leabman et al.
2017/0085437	A1	3/2017	Condeixa et al.
2017/0092115	A1	3/2017	Sloo et al.
2017/0110887	A1	4/2017	Bell et al.
2017/0110914	A1	4/2017	Bell
2017/0134686	A9	5/2017	Leabman
2017/0163076	A1	6/2017	Park et al.
2017/0179763	A9	6/2017	Leabman

FOREIGN PATENT DOCUMENTS

DE	2000216655	U1	2/2002
EP	1028482	A2	8/2000
EP	1081506	A1	3/2001
EP	2397973	A1	6/2010
EP	2346136	A1	7/2011
EP	2545635		9/2011
GB	2404497	A	2/2005
JP	2006157586	A	6/2006
JP	2007043432	A	2/2007
JP	2008167017	A	7/2008
KR	20060061776	A	6/2006
KR	20070044302	A	4/2007
KR	100755144	B1	9/2007
KR	20110132059	A	12/2011
KR	20110135540	A1	12/2011
KR	20120009843	A	2/2012
KR	20120108759	A	10/2012
KR	1020130026977	A	3/2013
WO	9952173	A2	10/1999
WO	WO 200111716	A1	2/2001
WO	2004077550	A1	9/2004
WO	2003091943	A1	11/2006
WO	WO 2006122783		11/2006
WO	2008156571	A2	12/2008
WO	2010022181	A1	2/2010
WO	WO 2010039246	A1	4/2010
WO	WO 2010138994	A1	12/2010
WO	2011112022	A2	9/2011
WO	WO 2012177283	A1	12/2012
WO	2013035190	A1	3/2013
WO	WO 2013031988	A1	3/2013
WO	WO 2013038074	A2	3/2013
WO	WO 2013042399	A1	3/2013
WO	WO 2013052950	A1	4/2013
WO	WO 2013105920	A2	7/2013
WO	WO 2014075103	A1	5/2014
WO	WO 2014132258	A1	9/2014
WO	WO 2014182788	A2	11/2014
WO	WO 2014182788	A3	11/2014
WO	WO 2014197472	A1	12/2014
WO	WO 2014209587	A1	12/2014
WO	WO 2015038773	A1	3/2015
WO	WO 2015097809	A1	7/2015
WO	WO 2015161323	A1	10/2015
WO	WO 2016024869	A1	2/2016
WO	WO 2016048512	A1	3/2016
WO	WO 2016187357	A1	11/2016

OTHER PUBLICATIONS

International Search Report dated Sep. 12, 2014 corresponding to International Patent Application No. PCT/US2014/037072, 3 pages.
International Search Report dated Jan. 27, 2015 corresponding to International Patent Application No. PCT/US2014/037170, 4 pages.
International Search Report dated Oct. 16, 2014 corresponding to International Patent Application No. PCT/US2014/041546, 4 pages.
International Search Report dated Oct. 13, 2014 corresponding to International Patent Application No. PCT/US2014/041534, 4 pages.
International Search Report dated Nov. 12, 2014 corresponding to International Patent Application No. PCT/US2014/046956, 4 pages.
Written Opinion of the International Searching Authority dated Nov. 12, 2014 corresponding to International Patent Application No. PCT/US2014/046956, 6 pages.
Energous Corp., Written Opinion, PCT/US2014/037170 , dated Sep. 15, 2014, 7 pgs.
Energous Corp., IPRP, PCT/US2014/037170, Nov. 10, 2015, 8 pgs.
Energous Corp., Written Opinion, PCT/US2014/041534, dated Oct. 13, 2014, 6 pgs.
Energous Corp., IPRP, PCT/US2014/041534, Dec. 29, 2015, 7 pgs.
Energous Corp., IPRP, PCT/US2014/046956, Jan. 19, 2016, 7 pgs.
Energous Corp., Written Opinion, PCT/US2014/037072, dated Sep. 12, 2014, 5 pgs.
Energous Corp., IPRP, PCT/US2014/037072, Nov. 10, 2015, 6 pgs.
Energous Corp., ISRWO, PCT/US2014/068568, Mar. 20, 2015, 10 pgs.
Energous Corp., IPRP, PCT/US2014/068568, Jun. 14, 2016, 8 pgs.
Energous Corp., ISRWO, PCT/US2014/055195, Dec. 22, 2014, 11 pgs.
Energous Corp., IPRP, PCT/US2014/055195, Mar. 22, 2016, 9 pgs.
Energous Corp., ISRWO, PCT/US2015/067291, Mar. 4, 2016, 10 pgs.
Energous Corp., IPRP, PCT/US2015/067291, Jul. 4, 2017, 4 pgs.
Energous Corp., ISRWO, PCT/US2015/067242, Mar. 16, 2016, 9 pgs.
Energous Corp., IPRP, PCT/US2015/067242, Jun. 27, 2017, 7 pgs.
Energous Corp., ISRWO, PCT/US2015/067243, Mar. 10, 2016, 11 pgs.
Energous Corp., IPRP, PCT/US2015/067243, Jun. 27, 2017, 7 pgs.
Energous Corp., ISRWO, PCT/US2014/037109, Apr. 8, 2016, 12 pgs.
Energous Corp., IPRP, PCT/US2014/037109, Apr. 12, 2016, 9 pgs.
Energous Corp., ISRWO, PCT/US2015/067275, Mar. 3, 2016, 8 pgs.
Energous Corp., IPRP, PCT/US2015/067275, Jul. 4, 2017, 7 pgs.
Energous Corp., ISRWO, PCT/US2015/067245, Mar. 17, 2016, 8 pgs.
Energous Corp., IPRP, PCT/US2015/067245, Jun. 27, 2017, 7 pgs.

(56) **References Cited**

OTHER PUBLICATIONS

Energous Corp., ISRWO, PCT/US2014/041546, Oct. 16, 2014, 12 pgs.
Energous Corp., IPRP, PCT/US2014/041546, Dec. 29, 2015, 9 pgs.
Energous Corp., ISRWO, PCT/US2015/67250, Mar. 30, 2016, 11 pgs.
Energous Corp., IPRP, PCT/US2015/67250, Mar. 30, 2016, 10 pgs.
Energous Corp., ISRWO, PCT/US2015/067325, Mar. 10, 2016, 9 pgs.
Energous Corp., IPRP, PCT/US2015/067325, Jul. 4, 2017, 8 pgs.
Energous Corp., ISRWO, PCT/US2014/040697, Oct. 1, 2014, 12 pgs.
Energous Corp., IPRP, PCT/US2014/040697, Dec. 8, 2015, 9 pgs.
Energous Corp., ISRWO, PCT/US2014/040705, Sep. 23, 2014, 8 pgs.
Energous Corp., IPRP, PCT/US2014/040705, Dec. 8, 2015, 6 pgs.
Energous Corp., ISRWO, PCT/US2015/067249, Mar. 29, 2016, 8 pgs.
Energous Corp., IPRP, PCT/US2015/067249, Jun. 27, 2017, 7 pgs.
Energous Corp., ISRWO, PCT/US2015/067246, May 11, 2016, 18 pgs.
Energous Corp., IPRP, PCT/US2015/067246, Jun. 27, 2017, 9 pgs.
Energous Corp., ISRWO, PCT/US2014/059317, Feb. 24, 2015, 13 pgs.
Energous Corp., IPRP, PCT/US2014/059317, Apr. 12, 2016, 10 pgs.
Energous Corp., ISRWO, PCT/US2014/049669, Nov. 13, 2014, 10 pgs.
Energous Corp., IPRP, PCT/US2014/049669, Feb. 9, 2016, 8 pgs.
Energous Corp., ISRWO, PCT/US2014/041323, Oct. 1, 2014, 10 pgs.
Energous Corp., IPRP, PCT/US2014/041323, Dec. 22, 2015, 8 pgs.
Energous Corp., ISRWO, PCT/US2014/048002, Nov. 13, 2014, 11 pgs.
Energous Corp., IPRP, PCT/US2014/048002, Feb. 12, 2015 8 pgs.
Energous Corp., ISRWO, PCT/US2014/062682, Feb. 12, 2015, 10 pgs.
Energous Corp., IPRP, PCT/US2014/062682, May 3, 2016, 8 pgs.
Energous Corp., ISRWO, PCT/US2014/049666, Nov. 10, 2014, 7 pgs.
Energous Corp., IPRP, PCT/US2014/049666, Feb. 9, 2016, 5 pgs.
Energous Corp., ISRWO, PCT/US2014/046961, Nov. 24, 2014, 16 pgs.
Energous Corp., IPRP, PCT/US2014/046961, Jan. 19, 2016, 8 pgs.
Energous Corp., ISRWO, PCT/US2015/067279, Mar. 11, 2015, 13 pgs.
Energous Corp., IPRP, PCT/US2015/067279, Jul. 4, 2017, 7 pgs.
Energous Corp., ISRWO, PCT/US2014/041342, Jan. 27, 2015, 10 pgs.
Energous Corp., IPRP, PCT/US2014/041342, Dec. 15, 2015, 8 pgs.
Energous Corp., ISRWO, PCT/US2014/046941, Nov. 6, 2014, 11 pgs.
Energous Corp., IPRP, PCT/US2014/046941, Jan. 19, 2016, 9 pgs.
Energous Corp., ISRWO, PCT/US2014/062661, Jan. 27, 2015, 12 pgs.
Energous Corp., IPRP, PCT/US2014/062661, May 3, 2016, 10 pgs.
Energous Corp., ISRWO, PCT/US2014/059871, Jan. 23, 2015, 12 pgs.
Energous Corp., IPRP, PCT/US2014/059871, Apr. 12, 2016, 9 pgs.
Energous Corp., ISRWO, PCT/US2014/045102, Oct. 28, 2014, 14 pgs.
Energous Corp., IPRP, PCT/US2014/045102, Jan. 12, 2016, 11 pgs.
Energous Corp., ISRWO, PCT/US2014/059340, Jan. 15, 2015, 13 pgs.
Energous Corp., IPRP, PCT/US2014/059340, Apr. 12, 2016, 11 pgs.
Energous Corp., ISRWO, PCT/US2015/067282, Jul. 5, 2016, 7 pgs.
Energous Corp., IPRP, PCT/US2015/067282, Jul. 4, 2017, 6 pgs.
Energous Corp., ISRWO, PCT/US2014/041558, Oct. 10, 2014, 8 pgs.
Energous Corp., IPRP, PCT/US2014/041558, Dec. 29, 2015, 6 pgs.
Energous Corp., ISRWO, PCT/US2014/045119, Oct. 13, 2014, 11 pgs.
Energous Corp., IPRP, PCT/US2014/045119, Jan. 12, 2016, 9 pgs.
Energous Corp., ISRWO PCT/US2014/045237, Oct. 13, 2014, 16 pgs.
Energous Corp., IPRP , PCT/US2014/045237, Jan. 12, 2016, 12 pgs.
Energous Corp., ISRWO , PCT/US2014/054897, Feb. 17, 2015, 10 pgs.
Energous Corp., IPRP , PCT/US2014/054897, Mar. 15, 2016, 8 pgs.
Energous Corp., ISRWO , PCT/US2015/067334, Mar. 3, 2016, 6 pgs.
Energous Corp., IPRP , PCT/US2015/067334, Jul. 4, 2017, 5 pgs.
Energous Corp., ISRWO , PCT/US2014/047963, Nov. 7, 2014, 13 pgs.
Energous Corp., IPRP , PCT/US2014/047963, Jan. 26, 2016, 10 pgs.
Energous Corp., ISRWO , PCT/US2014/054891, Dec. 18, 2014, 12 pgs.
Energous Corp., IPRP , PCT/US2014/054891, Mar. 15, 2016, 10 pgs.
Energous Corp., ISRWO , PCT/US2014/054953, Dec. 4, 2014, 7 pgs.
Energous Corp., IPRP , PCT/US2014/054953, Mar. 22, 2016, 5 pgs.
Energous Corp., ISRWO , PCT/US2015/067294, Mar. 29, 2016, 7 pgs.
Energous Corp., IPRP , PCT/US2015/067294, Jul. 4, 2017, 6 pgs.
Energous Corp., ISRWO , PCT/US2014/062672 Jan. 26, 2015, 11 pgs.
Energous Corp., IPRP , PCT/US2014/062672 May 10, 2016, 8 pgs.
Energous Corp., ISRWO , PCT/US2014/044810 Oct. 21, 2014, 12 pgs.
Energous Corp., IPRP , PCT/US2014/044810, Jan. 5, 2016, 10 pgs.
Energous Corp., ISRWO , PCT/US2015/067271, Mar. 11, 2016, 6 pgs.
Energous Corp., IPRP , PCT/US2015/067271, Jul. 4, 2017, 5 pgs.
Energous Corp., ISRWO , PCT/US2014/040648, Oct. 10, 2014, 11 pgs.
Energous Corp., IPRP , PCT/US2014/040648, Dec. 8, 2015, 8 pgs.
Energous Corp., ISRWO , PCT/US2014/049673, Nov. 18, 2014, 10 pgs.
Energous Corp., IPRP , PCT/US2014/049673, Feb. 9, 2016, 6 pgs.
Energous Corp., ISRWO , PCT/US2014/068282, Mar. 19, 2015, 13 pgs.
Energous Corp., IPRP, PCT/US2014/068282, Jun. 7, 2016, 10 pgs.
Energous Corp., ISRWO, PCT/US2014/068586, Mar. 20, 2015, 11 pgs.
Energous Corp., IPRP, PCT/US2014/068586, Jun. 14, 2016, 8 pgs.
Energous Corp., ISRWO, PCT/US2016/068504, Mar. 30, 2017, 8 pgs.
Energous Corp., ISRWO, PCT/US2016/068495, Mar. 30, 2017, 9 pgs.
Energous Corp., ISRWO, PCT/US2015/067287, Feb. 2, 2016, 8 pgs.
Energous Corp., IPRP, PCT/US2015/067287, Jul. 4, 2017, 6 pgs.
Energous Corp., ISRWO, PCT/US2016/068551, Mar. 17, 2017, 8 pgs.
Energous Corp., ISRWO, PCT/US2016/068498, May 17, 2017, 8 pgs.
Energous Corp., ISRWO, PCT/US2016/068993, Mar. 13, 2017, 12 pgs.
Energous Corp., ISRWO, PCT/US2016/068565, Mar. 8, 2017, 11 pgs.
Energous Corp., ISRWO, PCT/US2016/068987, May 8, 2017, 10 pgs.
Energous Corp., ISRWO, PCT/US2016/069316 , Mar. 16, 2017, 15 pgs.
Supplementary European Search Report, EP Patent Application No. EP14818136-5, dated Jul. 21, 2016, 9 pgs.
European Search Report, EP Patent Application No. EP16189052.0, dated Jan. 31, 2017, 11 pgs.
European Search Report, EP Patent Application No. EP16189319-3, dated Feb. 1, 2017, 9 pgs.

(56) **References Cited**

OTHER PUBLICATIONS

European Search Report, EP Patent Application No. EP14822971, dated Feb. 1, 2017, 9 pgs.
European Search Report, EP Patent Application No. EP16189987, dated Feb. 1, 2017, 8 pgs.
European Search Report, EP Patent Application No. 16196205.5, dated Mar. 28, 2017, 7 pgs.
European Search Report, EP Patent Application No. 16189300, dated Feb. 28, 2017, 4 pgs.
European Search Report, EP Patent Application No. 16189988.5, dated Mar. 1, 2017, 4 pgs.
European Search Report, EP Patent Application No. 16189982.8, dated Jan. 27, 2017, 9 pgs.
European Search Report, EP Patent Application No. 16189974, dated Mar. 2, 2017, 5 pgs.
European Search Report, EP Patent Application No. 16193743, dated Feb. 2, 2017, 5 pgs.
European Search Report, EP Patent Application No. 14868901.1, dated Jul. 7, 2017, 5 pgs.
L.H. Hsieh et al. Development of a Retrodirective Wireless Microwave Power Transmission System, IEEE, 2003 pp. 393-396.
B.D. Van Veen et al., Beamforming: A Versatile Approach to Spatial Filtering, IEEE, ASSP Magazine, Apr. 1988, pp. 4-24.
Leabman, Adaptive Band-partitioning for Interference Cancellation in Communication System, Thesis Massachusetts Institute of Technology, Feb. 1997, pp. 1-70.
Panda, SIW based Slot Array Antenna and Power Management Circuit for Wireless Energy Harvesting Applications, IEEE APSURSI, Jul. 2012, 2 pgs.
Singh, Wireless Power Transfer Using Metamaterial Bonded Microstrip Antenna for Smart Grid WSN: In Fourth International Conference on Advances in Computing and Communications (ICACC), Aug. 27-29, 2014, Abstract 299.
T. Gill et al. "A System for Change Detection and Human Recognition in Voxel Space using the Microsoft Kinect Sensor," 2011 IEEE Applied Imagery Pattern Recognition Workshop. 8 pgs.
J. Han et al. Enhanced Computer Vision with Microsoft Kinect Sensor: A Review, IEEE Transactions on Cybernetics vol. 43, No. 5. pp. 1318-1334.
Zhai, "A Practical wireless charging system based on ultra-wideband retro-reflective beamforming" 2010 IEEE Antennas and Propagation Society International Symposium, Toronto, ON 2010, pp. 1-4.
Mao: BeamStar: An Edge-Based Approach to Routing in Wireless Sensors Networks, IEEE Transactions on Mobile Computing, IEEE Service Center, Los Alamitos, CA US, vol. 6, No. 11, Nov. 1, 2007, 13 pgs.
Smolders—Institute of Electrical 1-15 and Electronics Engineers: "Broadband microstrip array antennas" Digest of the Antennas and Propagation Society International Symposium. Seattle, WA Jun. 19-24, 1994. Abstract 3 pgs.
Paolo Nenzi et al; "U-Helix: On-chip short conical antenna", 2013 7th European Conference on Antennas and Propagation (EUCAP), ISBN:978-1-4673-2187-7, IEEE, Apr. 8, 2013, 5 pgs.
Adamiuk G et al; "Compact, Dual-Polarized UWB-Antanna, Embedded in a Dielectric" IEEE Transactions on Antenna and Propagation, IEEE Service Center, Piscataway, NJ, US vol. 56, No. 2, ISSN: 0018-926X, abstract; Figure 1, Feb. 1, 2010, 8 pgs.
Mascarenas et al.; "Experimental Studies of Using Wireless Energy Transmission for Powering Embedded Sensor Nodes." Nov. 28, 2009, Journal of Sound and Vibration, pp. 2421-2433.
Li et al. High-Efficiency Switching-Mode Charger System Design Conisderations with Dynamnic Power Path Management, Mar./Apr. 2012 Issue, 8 pgs.
European Search Report. EP15876036, dated May 3, 2018, 8 pgs.
European Search Report. EP15874273, dated Apr. 27, 2018, 7 pgs.
Energous Corp., ISRWO, PCT/US2018/012806 , dated Mar. 23, 2018, 9 pgs.
Energous Corp., ISRWO, PCT/US2017/046800 , dated Sep. 11, 2017, 13 pgs.
Energous Corp., ISRWO, PCT/US2017/065886, dated Apr. 6, 2018, 13 pgs.
Order Granting Reexamination Request Control No. 90013793 Aug. 31, 2016, 23 pgs.
Ossia Inc. vs *Energous Corp.*, PGR2016-00023-Institution Decision, Nov. 29, 2016, 29 pgs.
Ossia Inc. vs *Energous Corp.*, PGR2016-00024-Institution Decision, Nov. 29, 2016, 50 pgs.
Ossia Inc. vs *Energous Corp.*, PGR2016-00024-Judgement-Adverse, Jan. 20, 2017, 3 pgs.
ReExam Ordered Control No. 90013793 Feb. 2, 2017, 8 pgs.
Ossia Inc. vs *Energous Corp.*, Declaration of Stephen B. Heppe in Support of Petition for Post-Grant Review of U.S. Pat. No. 9,124,125, PGR2016-00024, May 31, 2016, 122 pgs.
Ossia Inc. vs *Energous Corp.*, Petition for Post-Grant Review of U.S. Pat. No. 9,124,125, May 31, 2016, 92 pgs.
Ossia Inc. vs *Energous Corp.*, Patent Owner Preliminary Response, Sep. 8, 2016, 95 pgs.
Ossia Inc. vs *Energous Corp.*, Petition for Post Grant Review of U.S. Pat. No. 9,124,125, May 31, 2016, 86 pgs.
Ossia Inc. vs *Energous Corp.*, Declaration of Stephen B. Heppe in Support of Petition for Post-Grant Review of U.S. Pat. No. 9,124,125, PGR2016-00023, May 31, 2016, 144 pgs.

* cited by examiner

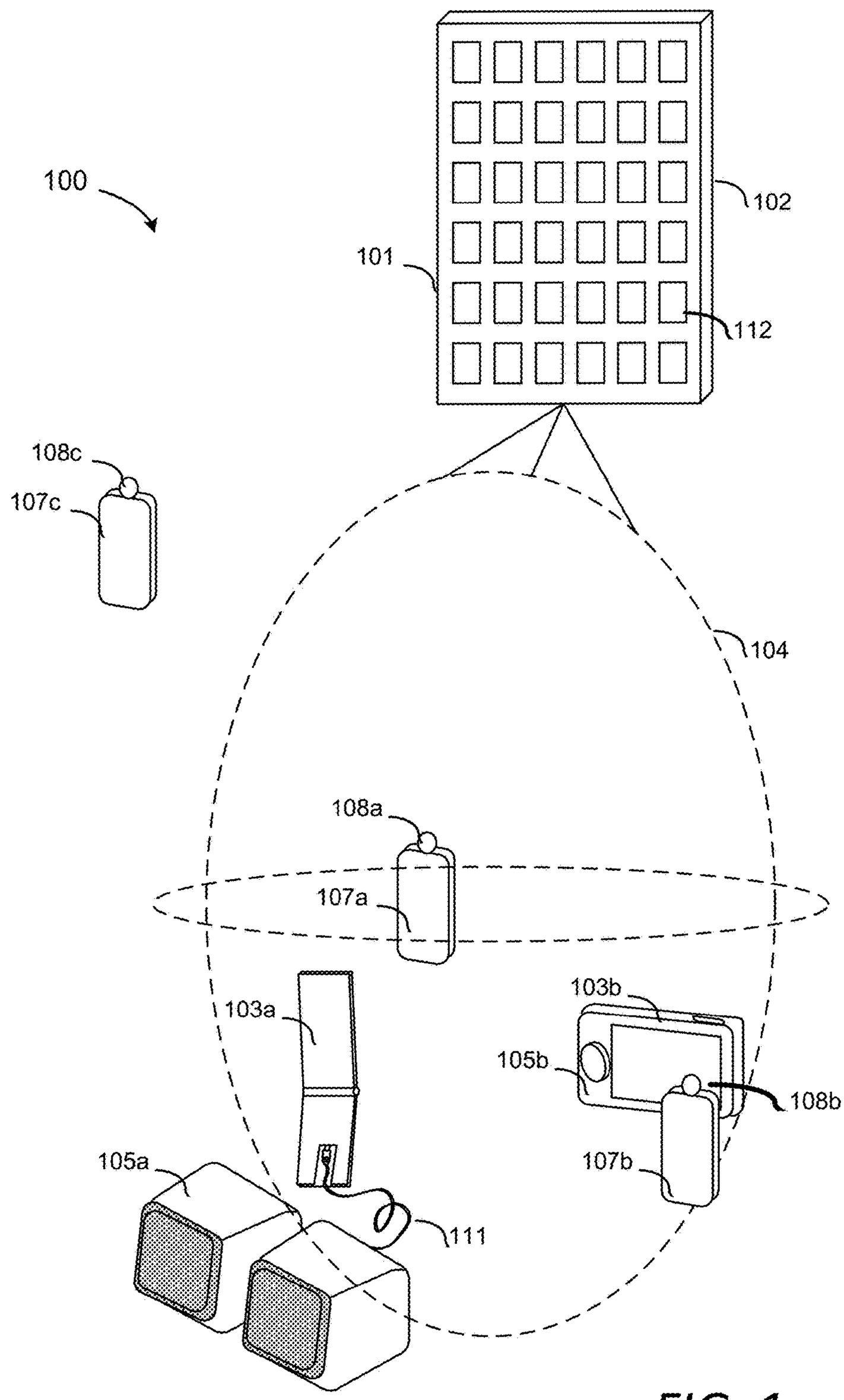
100
102
101
112
108c
107c
104
108a
107a
103b
103a
105b
108b
105a
107b
111

FIG. 1

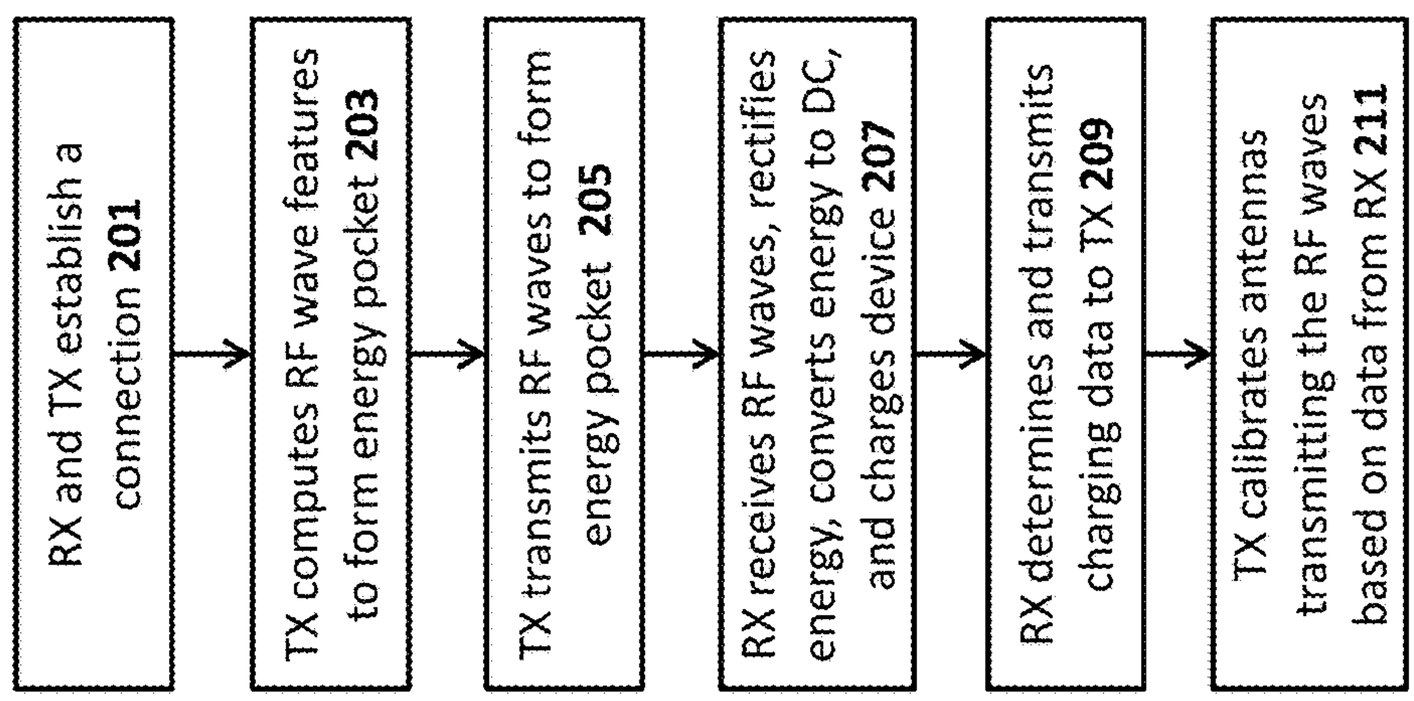
200
RX and TX establish a connection 201
TX computes RF wave features to form energy pocket 203
TX transmits RF waves to form energy pocket 205
RX receives RF waves, rectifies energy, converts energy to DC, and charges device 207
RX determines and transmits charging data to TX 209
TX calibrates antennas transmitting the RF waves based on data from RX 211

FIG. 2

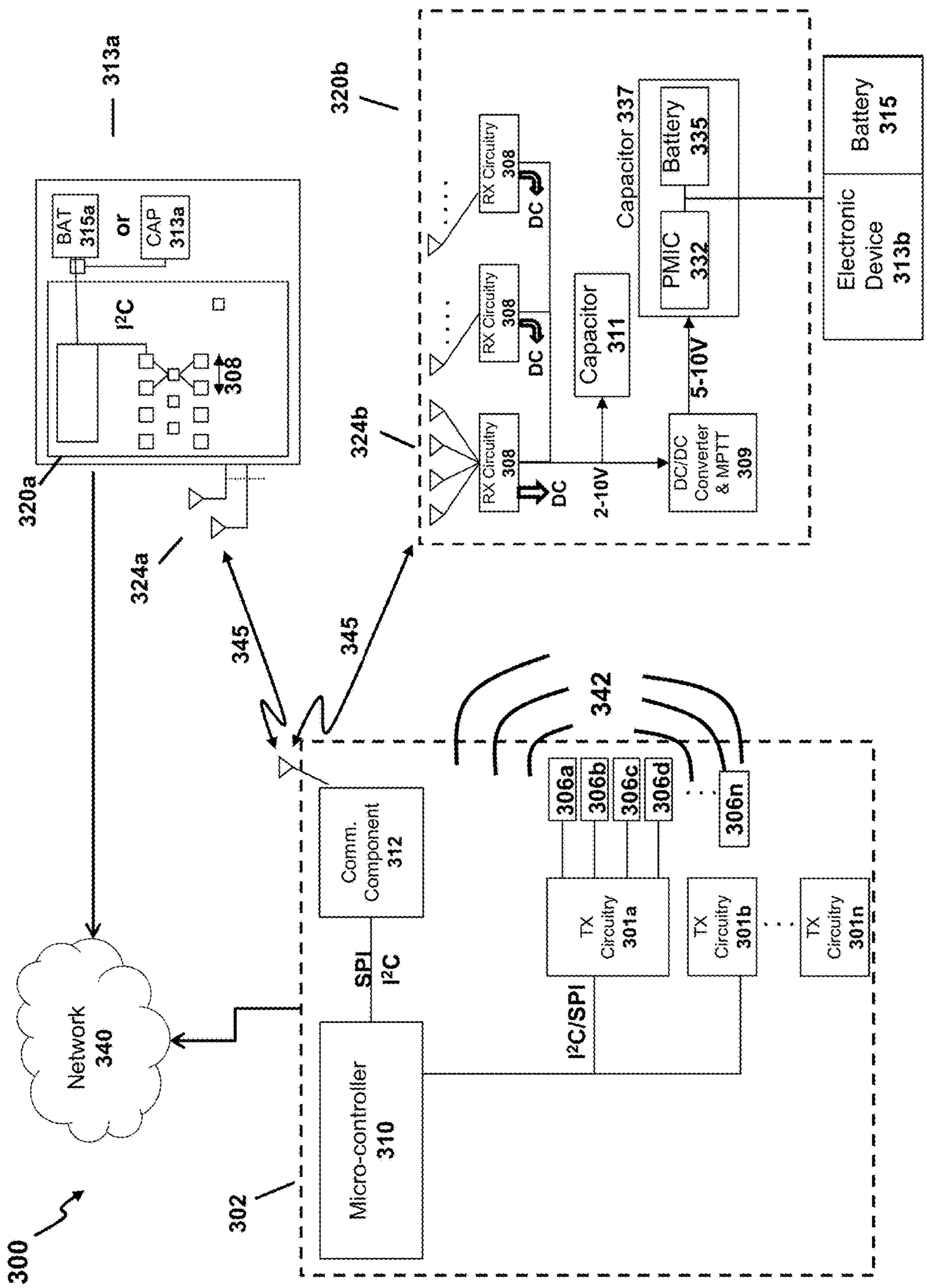
300
Network 340
302
Micro-controller 310
SPI
I²C
Comm. Component 312
I²C/SPI
TX Circuitry 301a
TX Circuitry 301b
TX Circuitry 301n
306a
306b
306c
306d
306n
342
345
345
320a
I²C
308
BAT 315a
or
CAP 313a
313a
324a
320b
324b
RX Circuitry 308
RX Circuitry 308
RX Circuitry 308
DC
DC
DC
2-10V
Capacitor 311
DC/DC Converter & MPTT 309
5-10V
Capacitor 337
PMIC 332
Battery 335
Electronic Device 313b
Battery 315

FIG. 3

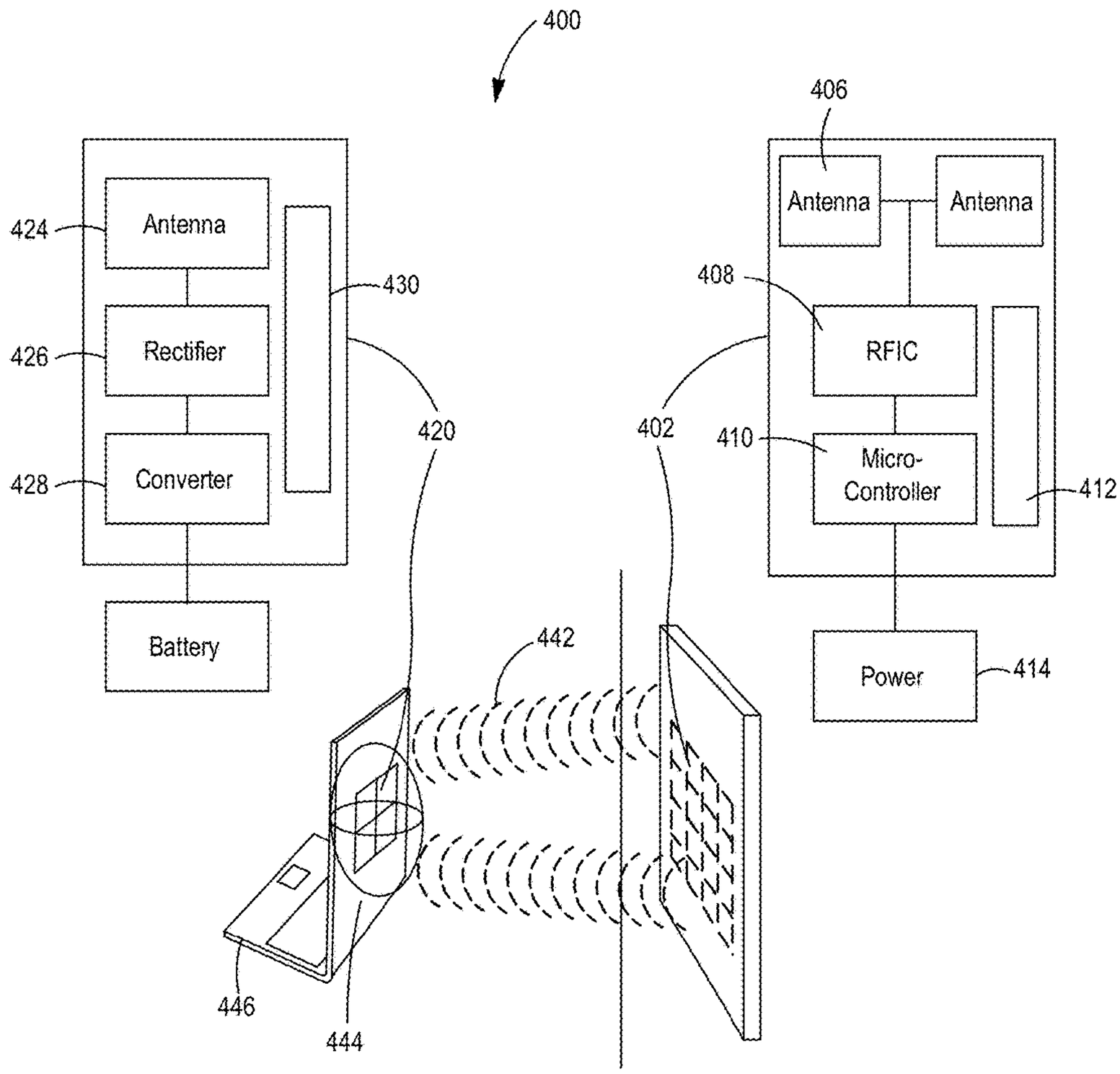
400
406
Antenna
Antenna
424
Antenna
430
408
RFIC
426
Rectifier
420
402
410
Micro-
Controller
412
428
Converter
Battery
442
Power
414
446
444

FIG. 4

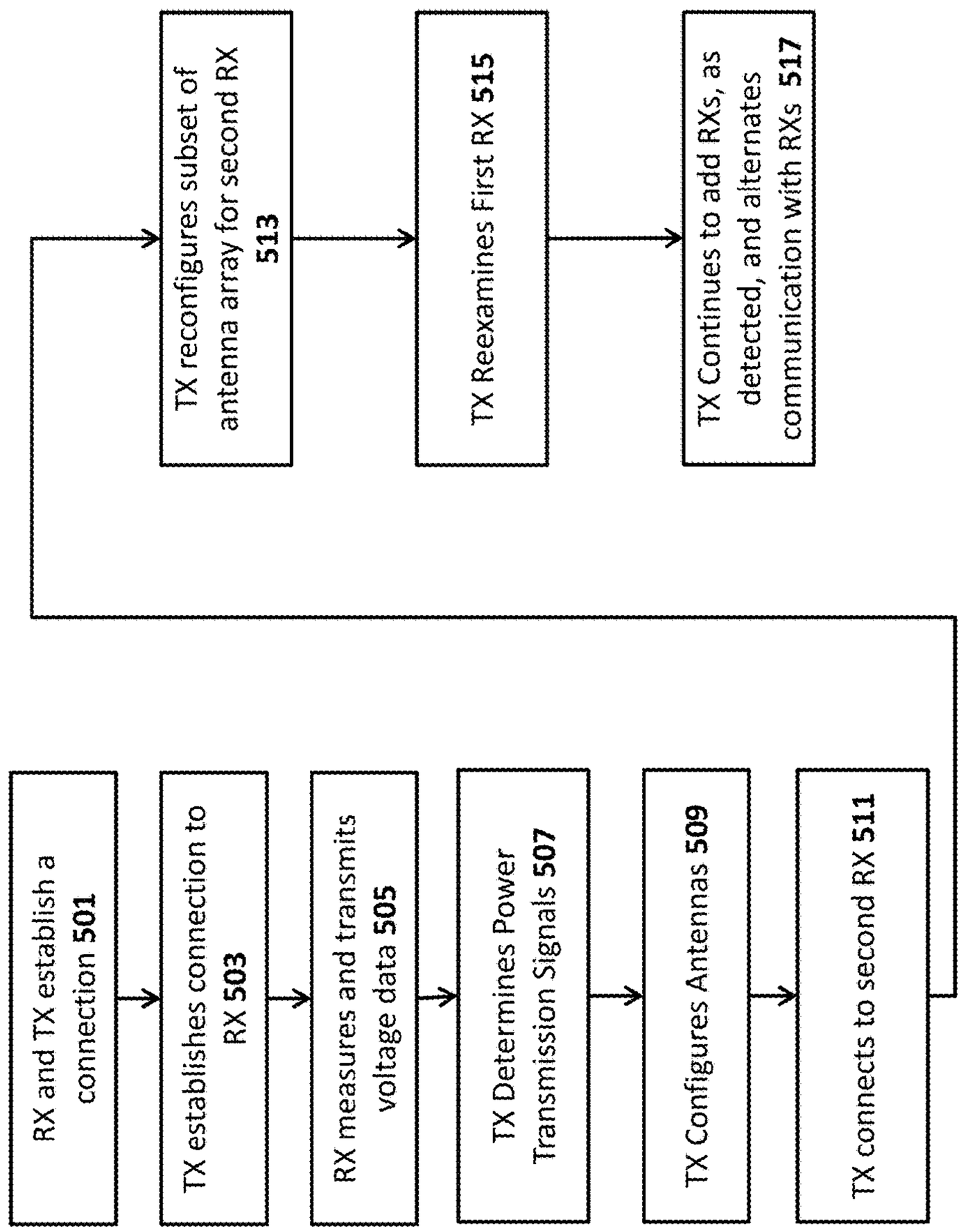
RX and TX establish a connection 501
TX establishes connection to RX 503
RX measures and transmits voltage data 505
TX Determines Power Transmission Signals 507
TX Configures Antennas 509
TX connects to second RX 511
TX reconfigures subset of antenna array for second RX 513
TX Reexamines First RX 515
TX Continues to add RXs, as detected, and alternates communication with RXs 517

FIG. 5

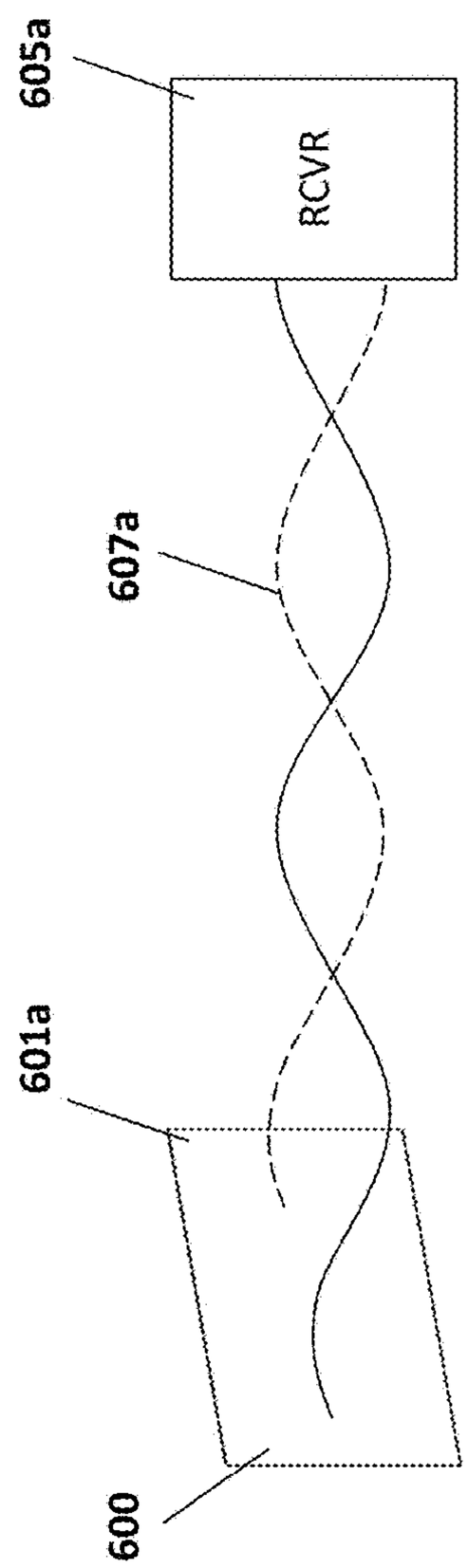

FIG. 6A

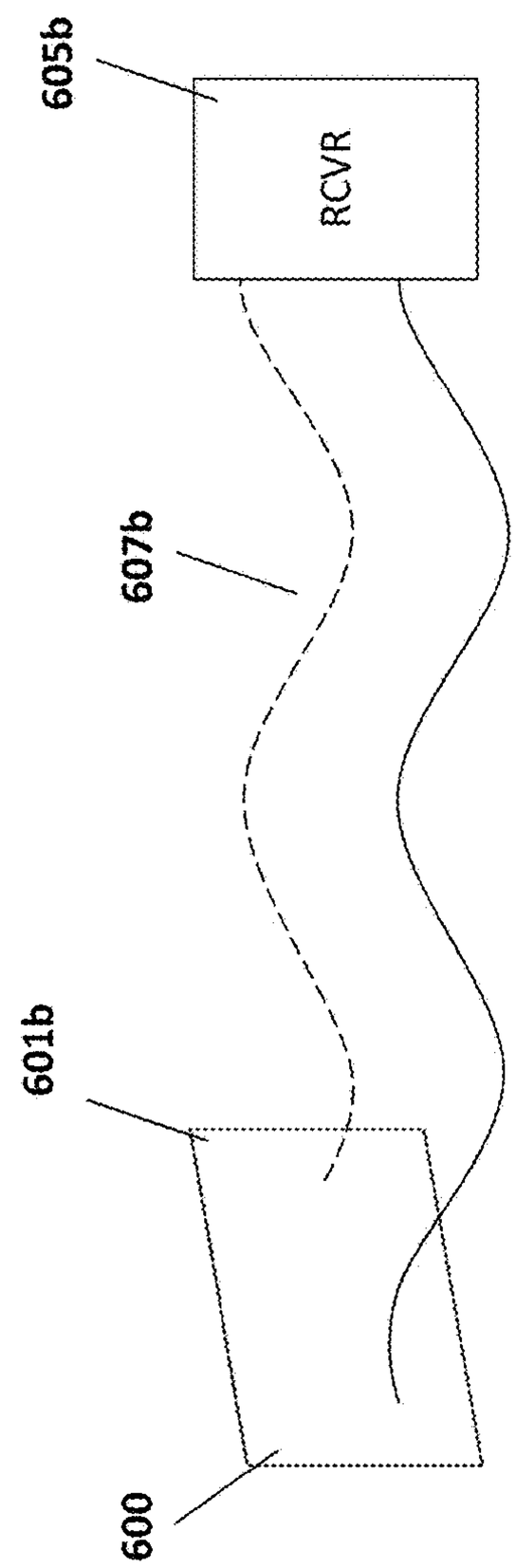

FIG. 6B

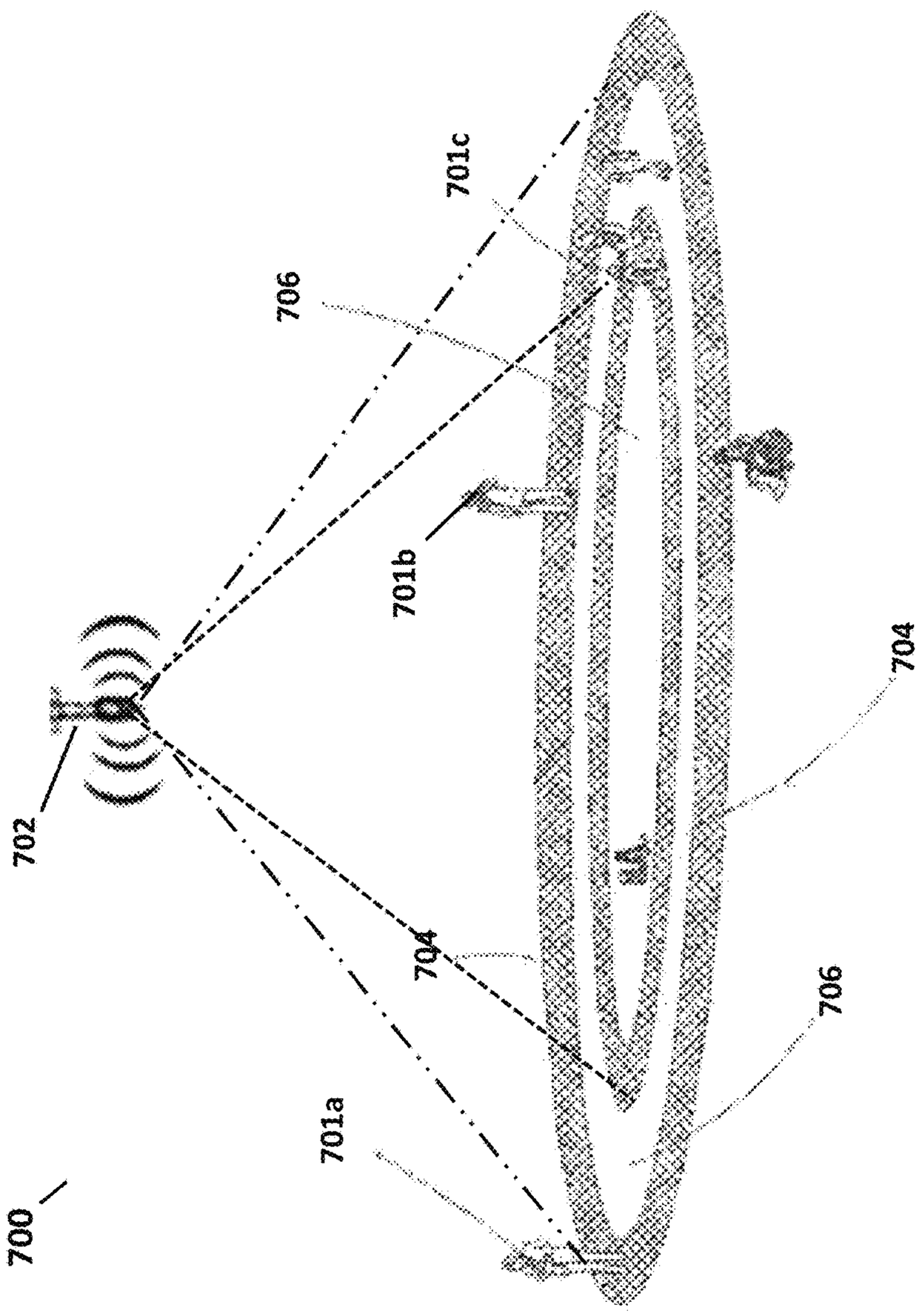

FIG. 7

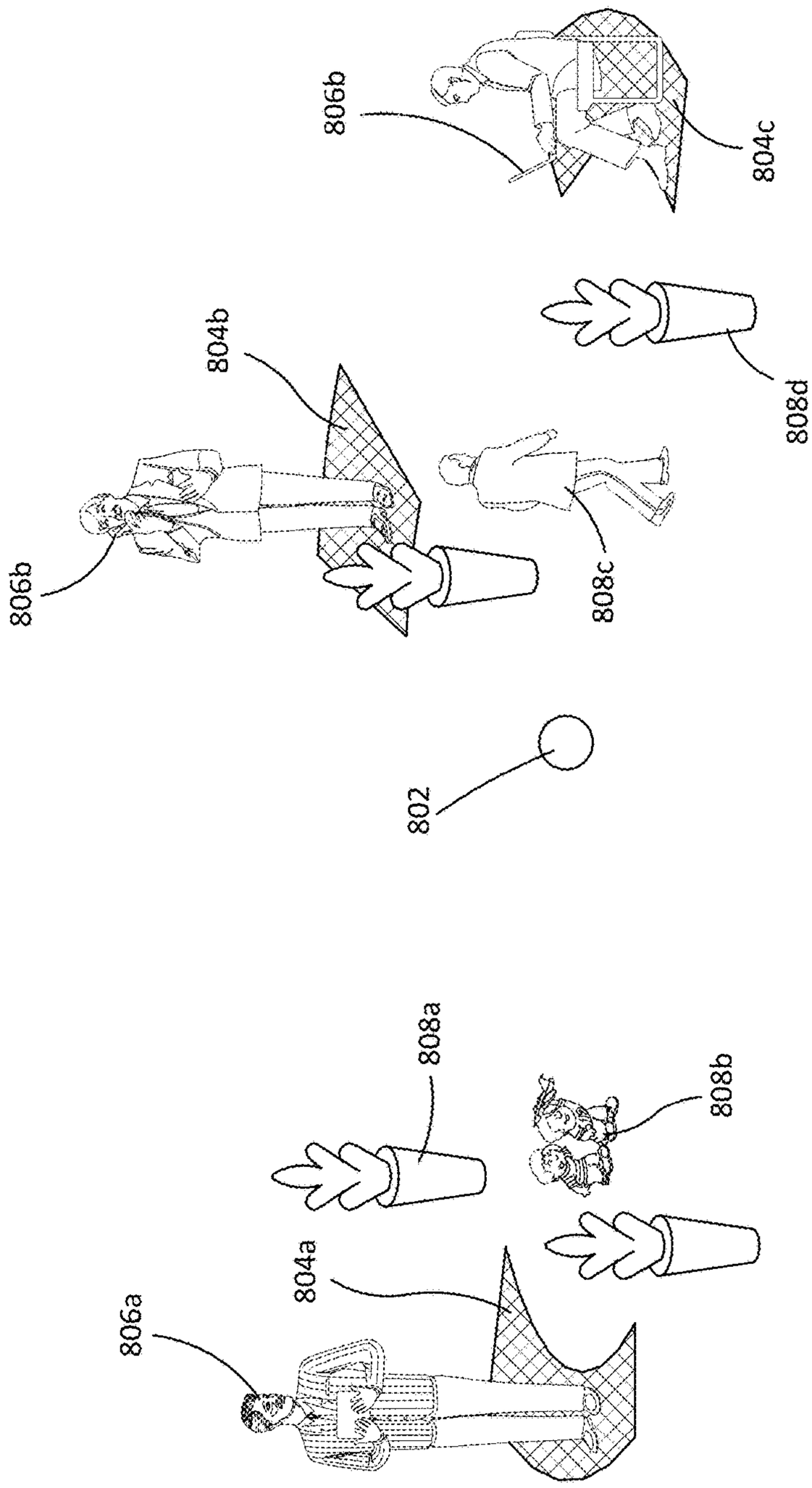

FIG. 8

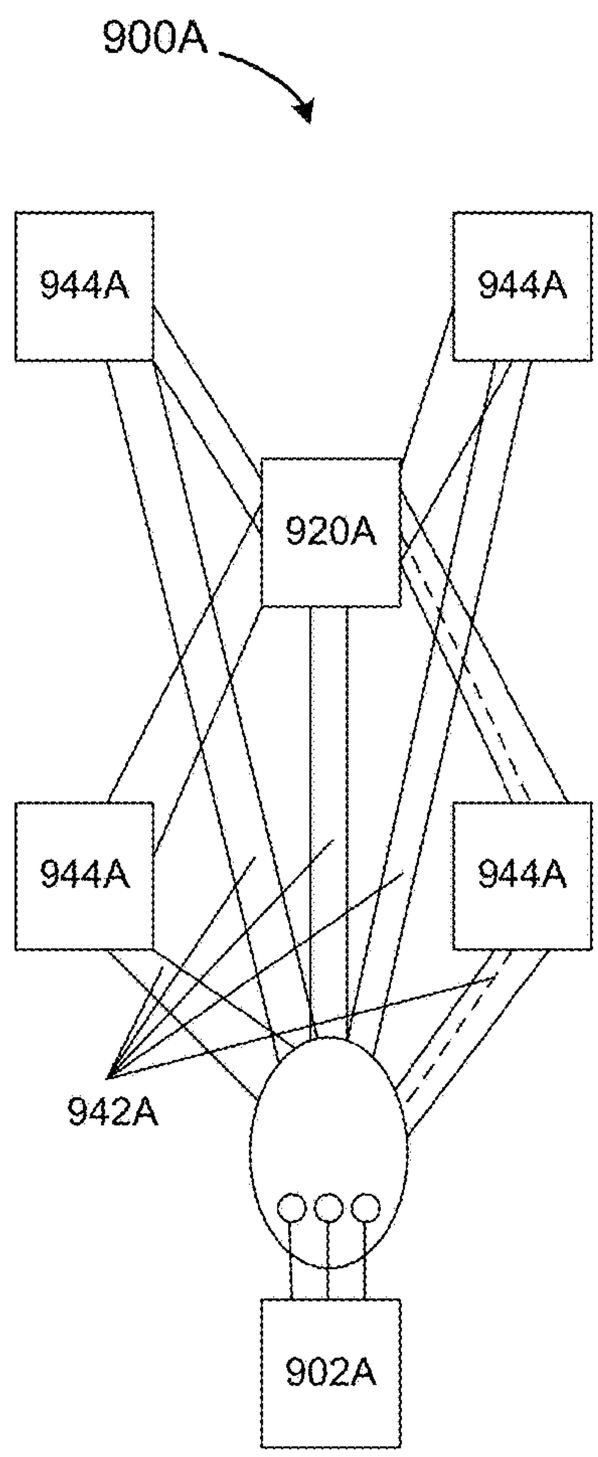
900A
944A
944A
920A
944A
944A
942A
902A

FIG. 9A

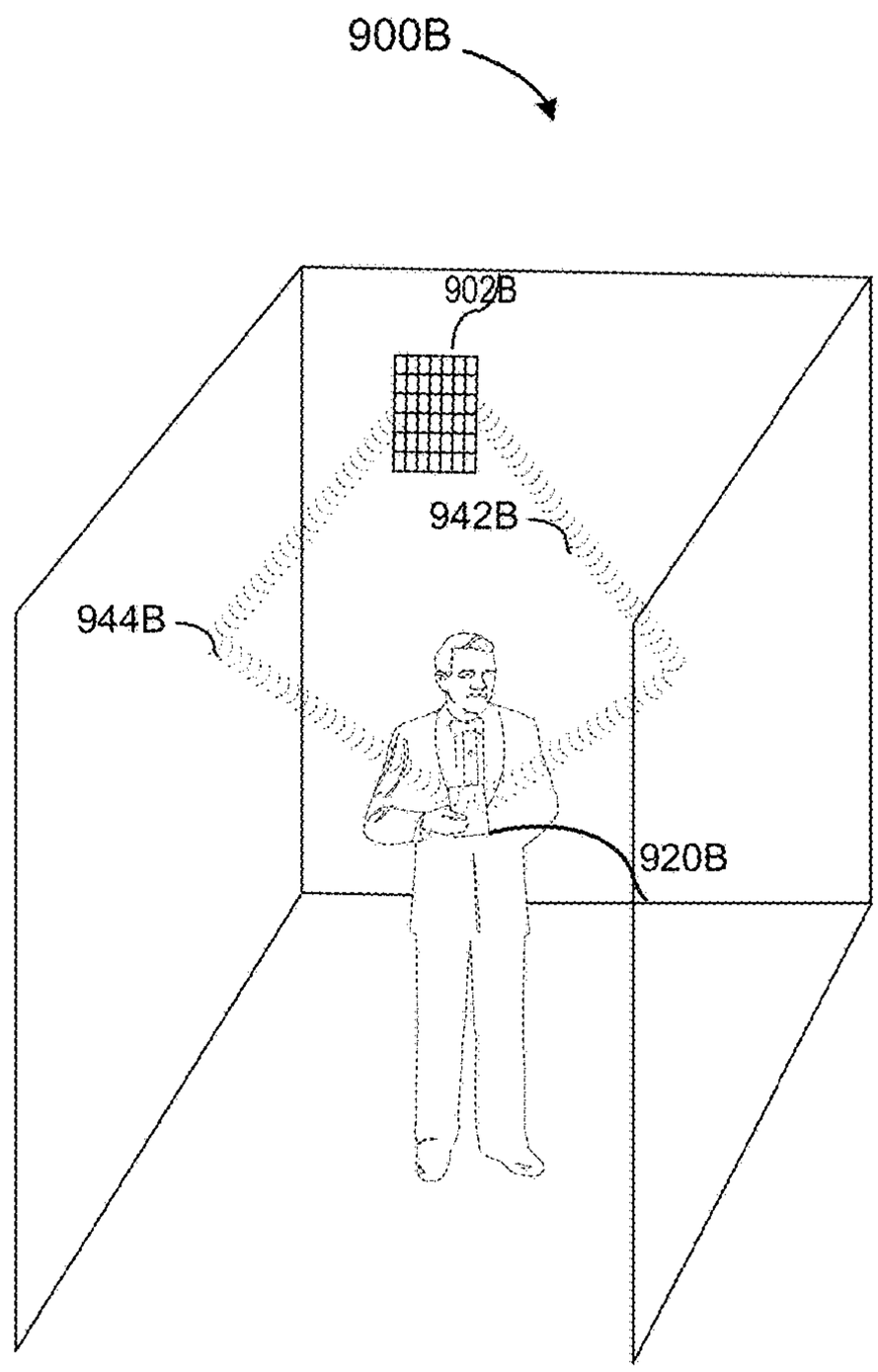
900B
902B
942B
944B
920B

FIG. 9B

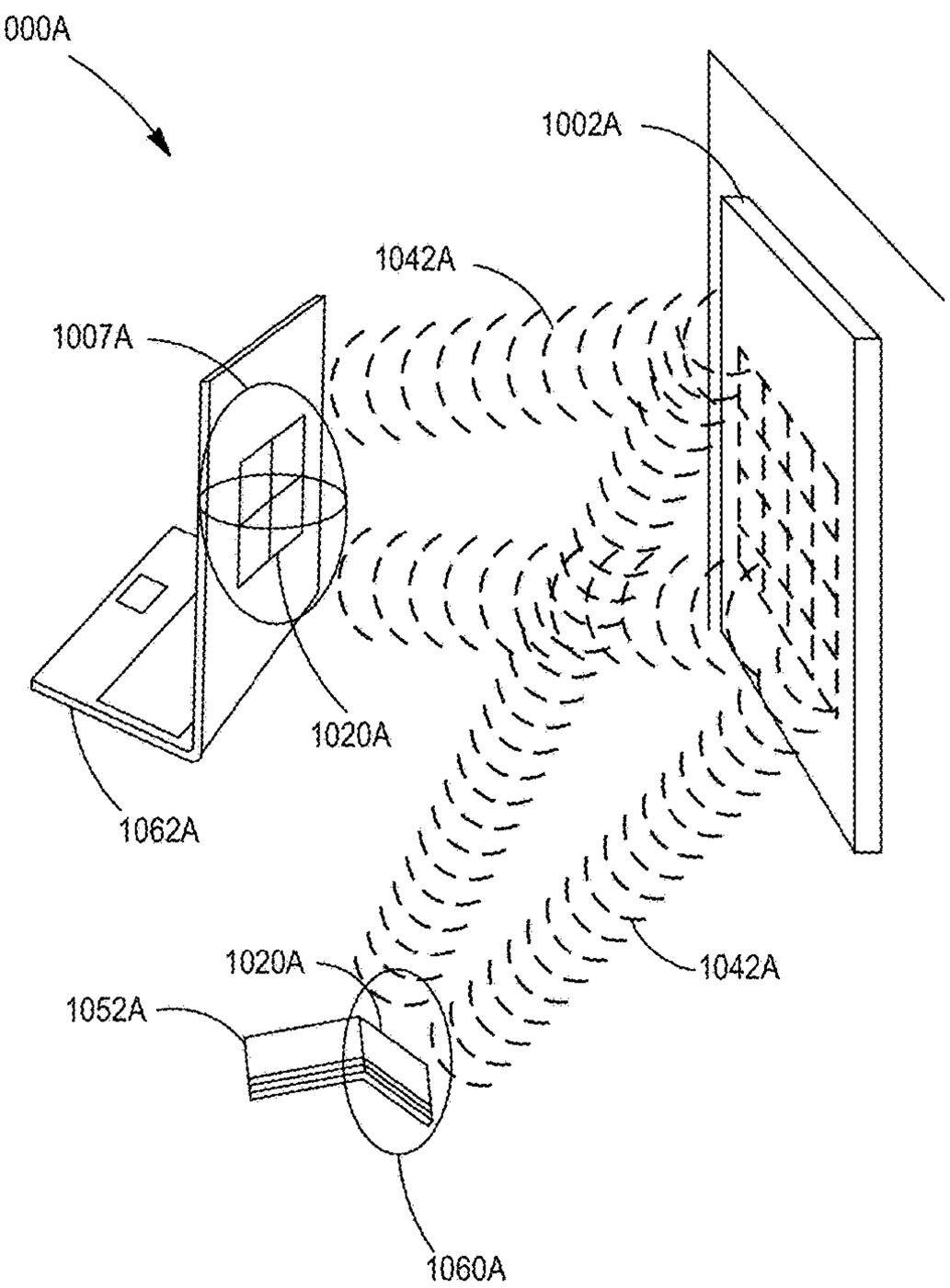
1000A
1002A
1042A
1007A
1020A
1062A
1020A
1052A
1042A
1060A

FIG. 10A

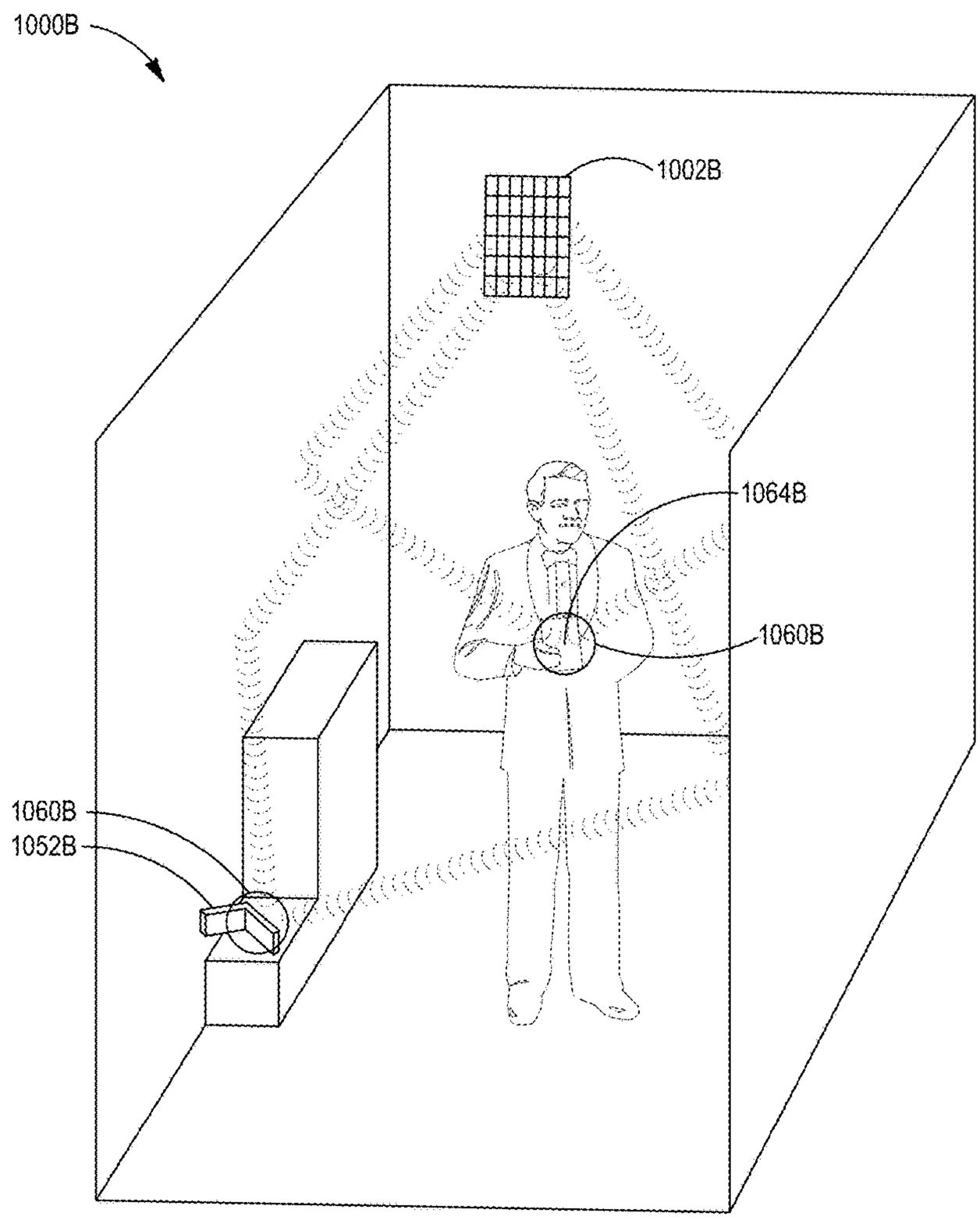

FIG. 10B

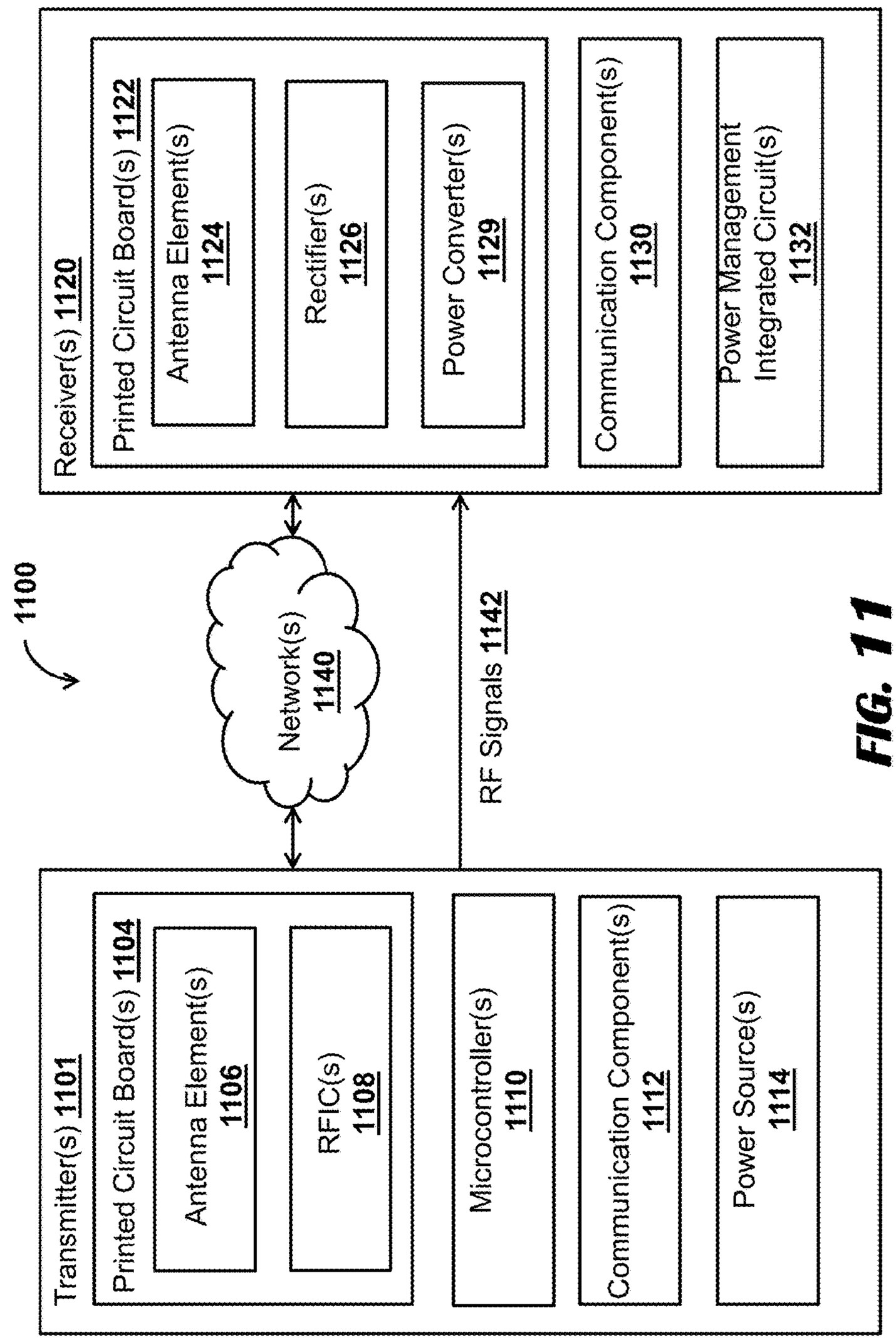
1100
Transmitter(s) 1101
Printed Circuit Board(s) 1104
Antenna Element(s) 1106
RFIC(s) 1108
Microcontroller(s) 1110
Communication Component(s) 1112
Power Source(s) 1114
Network(s) 1140
RF Signals 1142
Receiver(s) 1120
Printed Circuit Board(s) 1122
Antenna Element(s) 1124
Rectifier(s) 1126
Power Converter(s) 1129
Communication Component(s) 1130
Power Management Integrated Circuit(s) 1132

FIG. 11

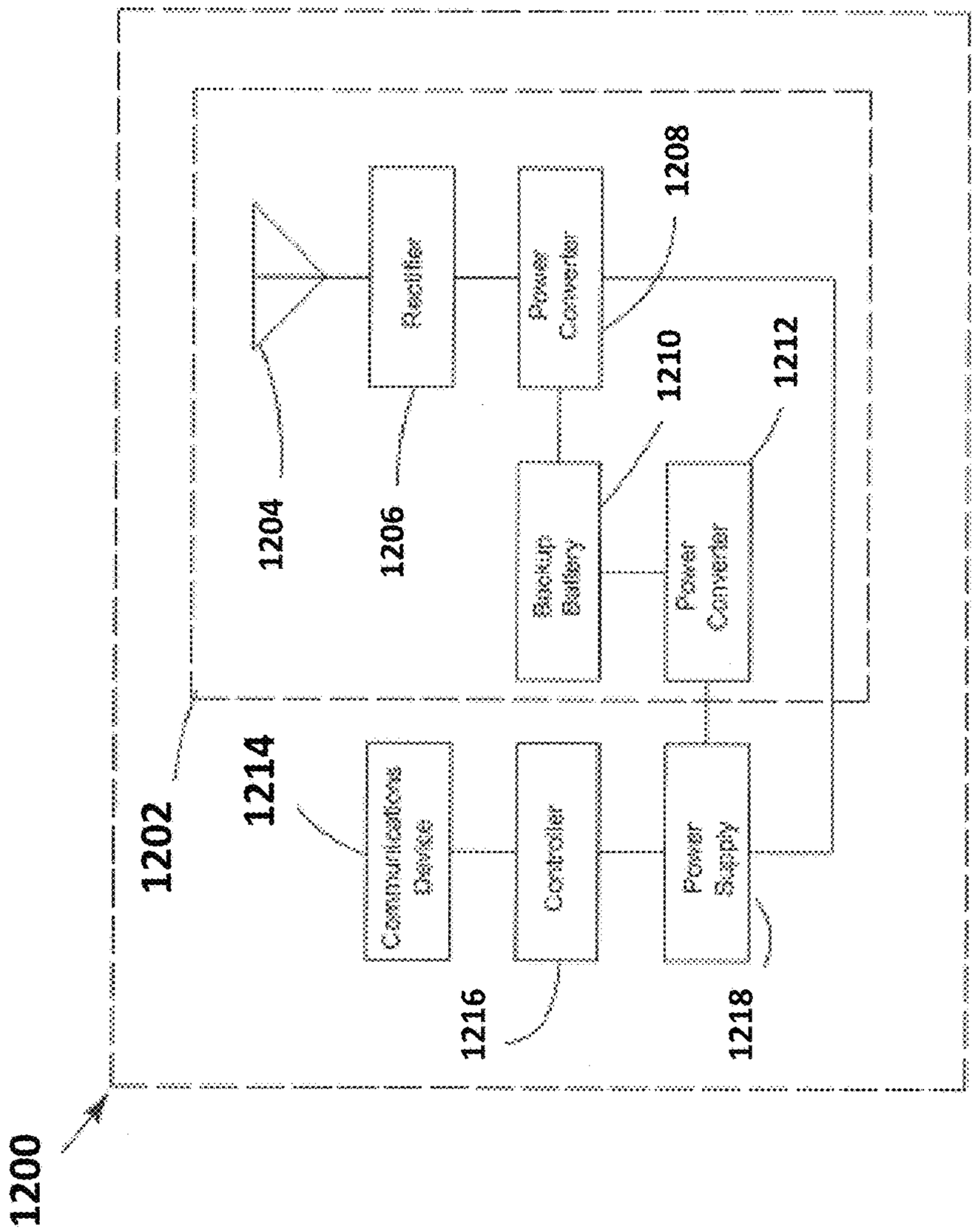
1200
1202
1204
1206
Rectifier
Power Converter
1208
Backup Battery
1210
Power Converter
1212
1214
Communications Device
Controller
1216
Power Supply
1218

FIG. 12

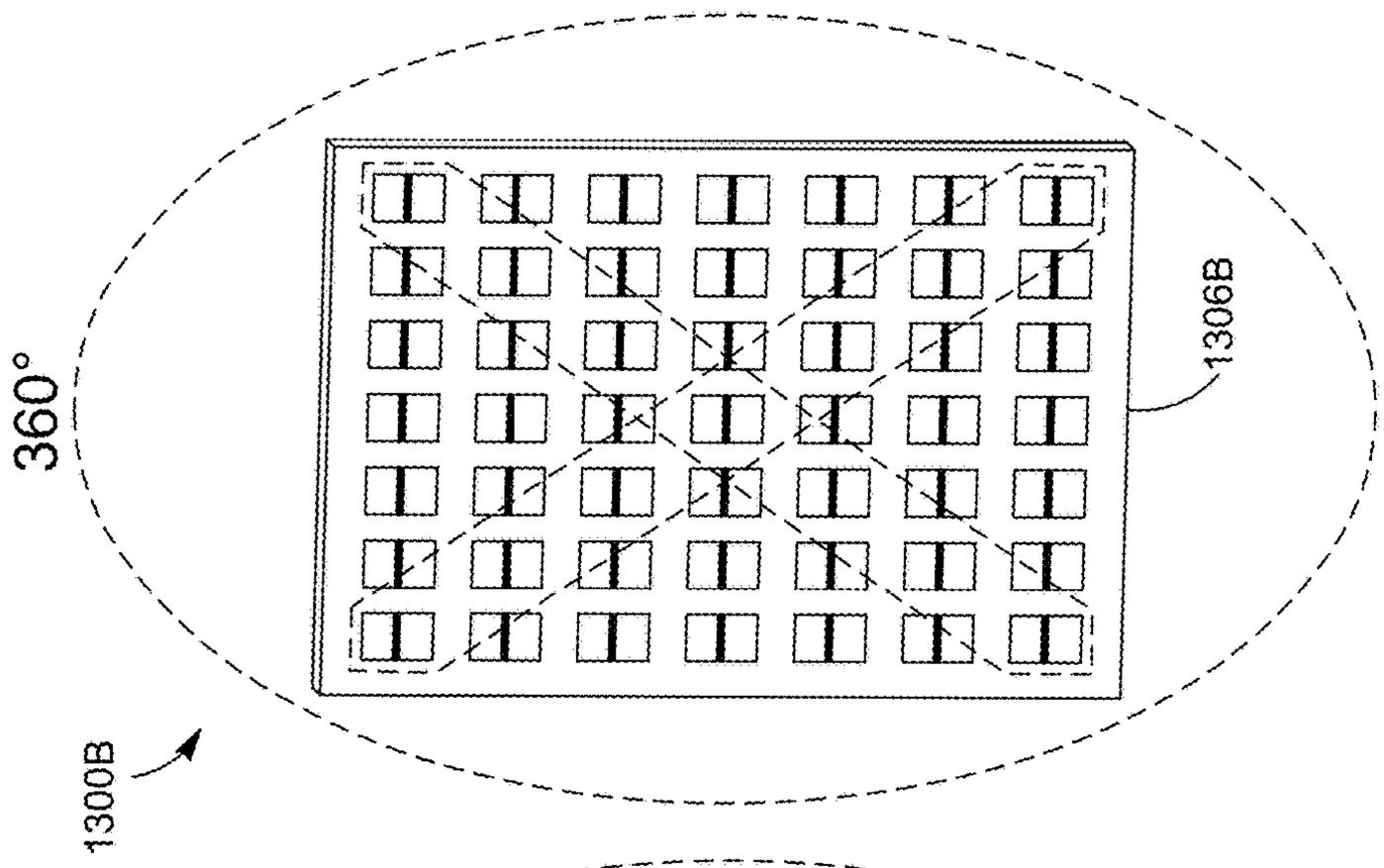

FIG. 13B

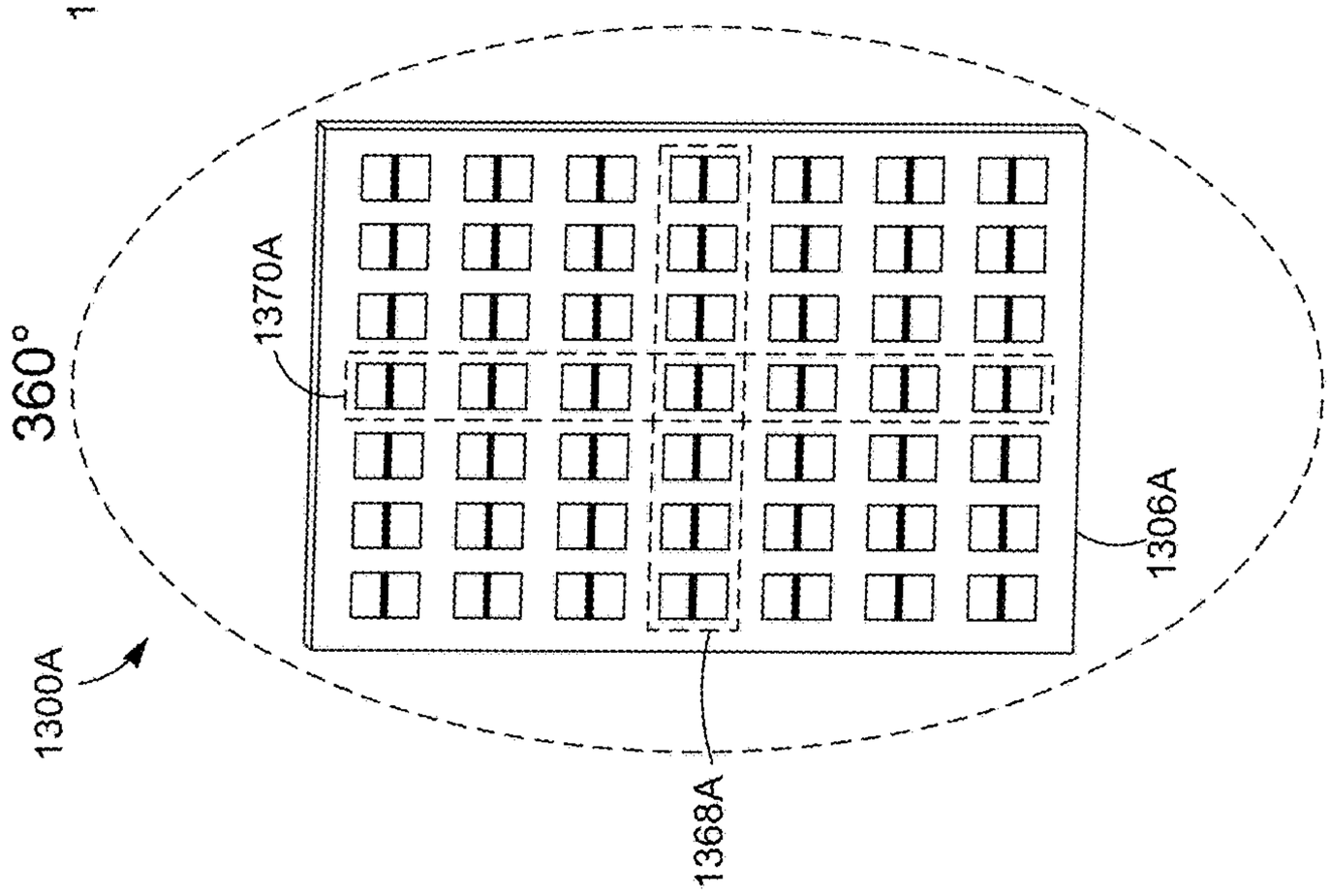

FIG. 13A

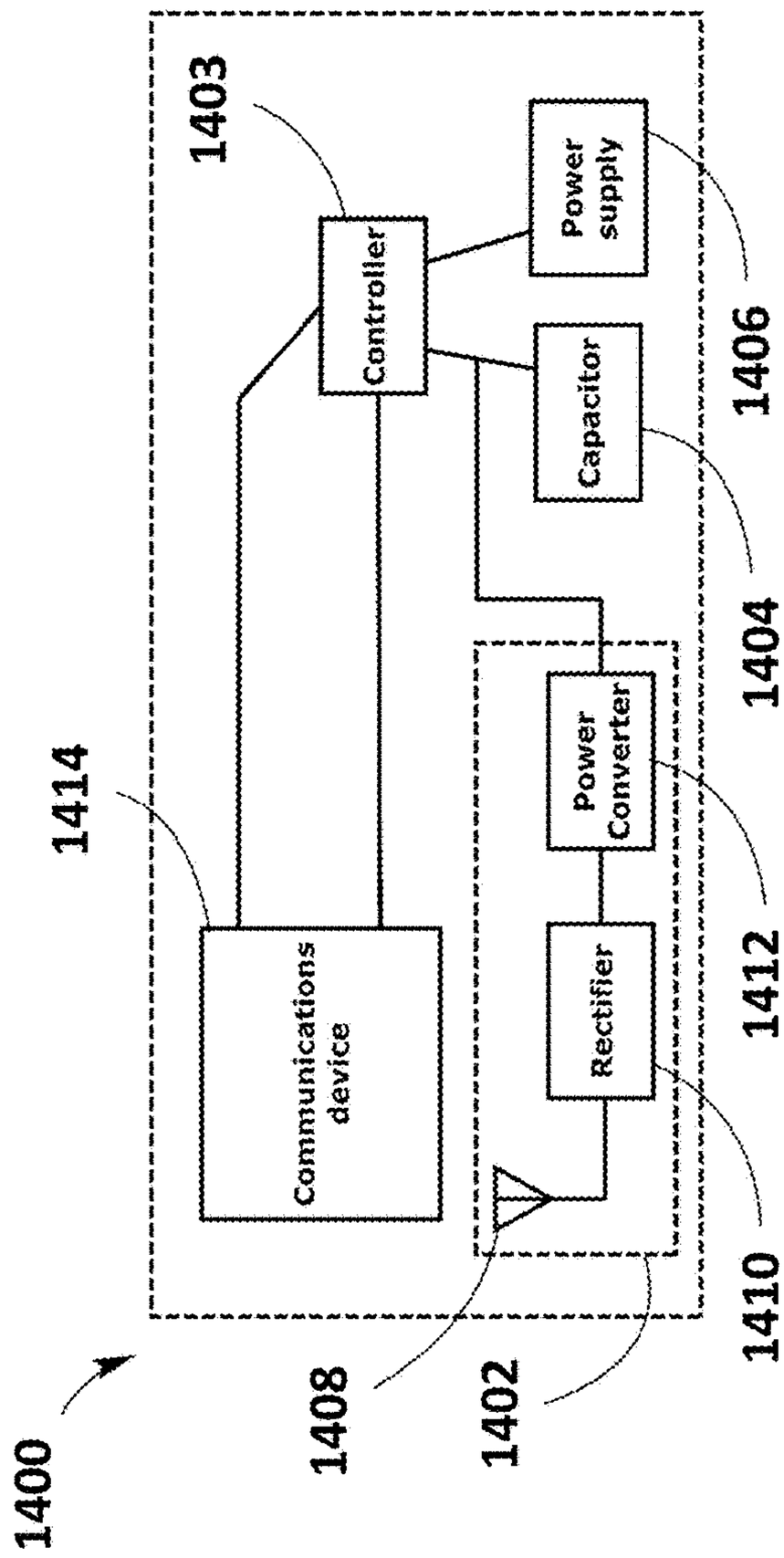
1400
1414
Communications device
1403
Controller
Power supply
1406
Capacitor
1404
Power Converter
1412
Rectifier
1410
1408
1402

FIG. 14

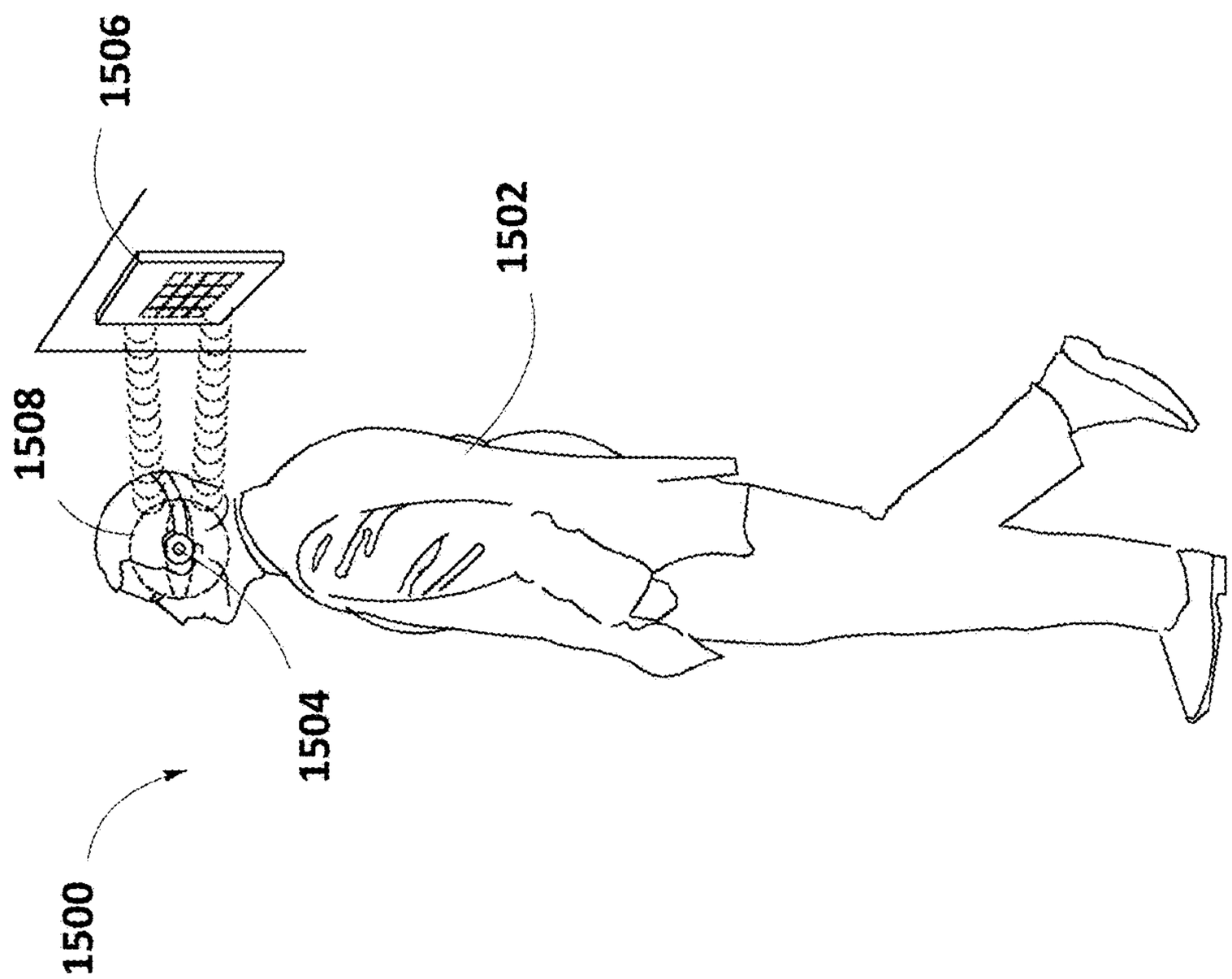

FIG. 15

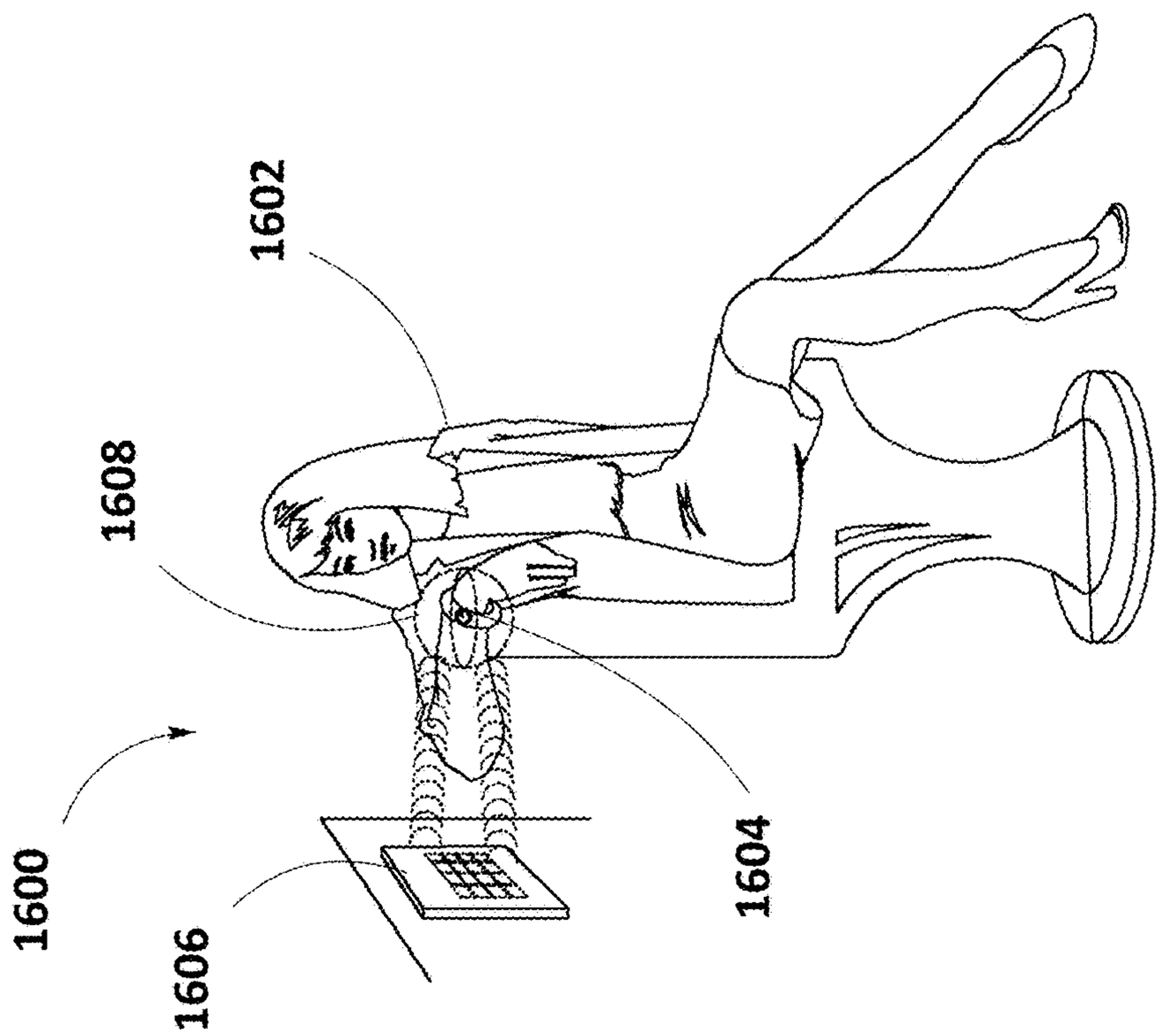

FIG. 16

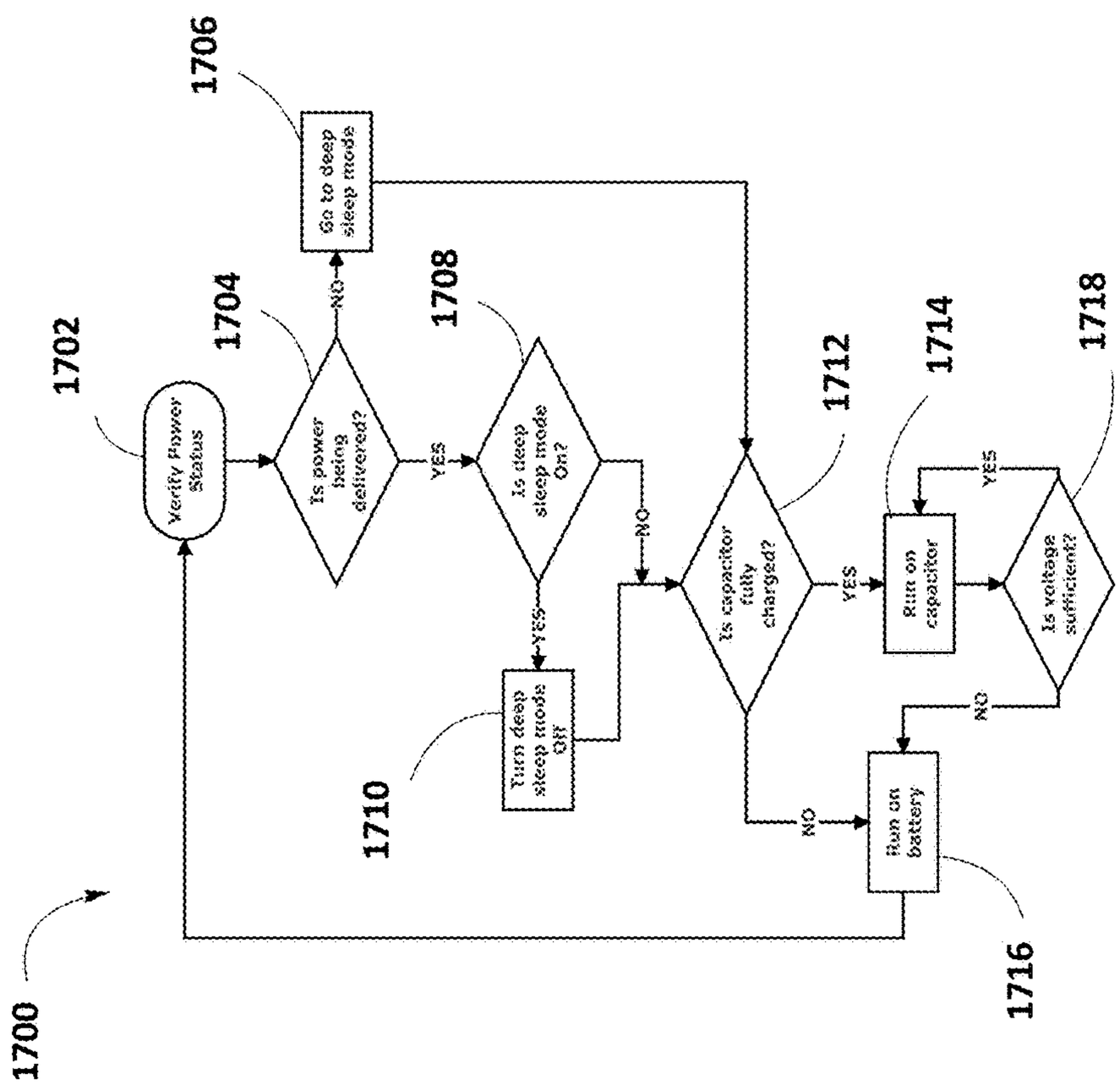
1700
1702
Verify Power Status
1704
Is power being delivered?
NO
1706
Go to deep sleep mode
YES
1708
Is deep sleep mode On?
YES
1710
Turn deep sleep mode Off
NO
1712
Is capacitor fully charged?
YES
1714
Run on capacitor
YES
1718
Is voltage sufficient?
NO
NO
1716
Run on battery

FIG. 17

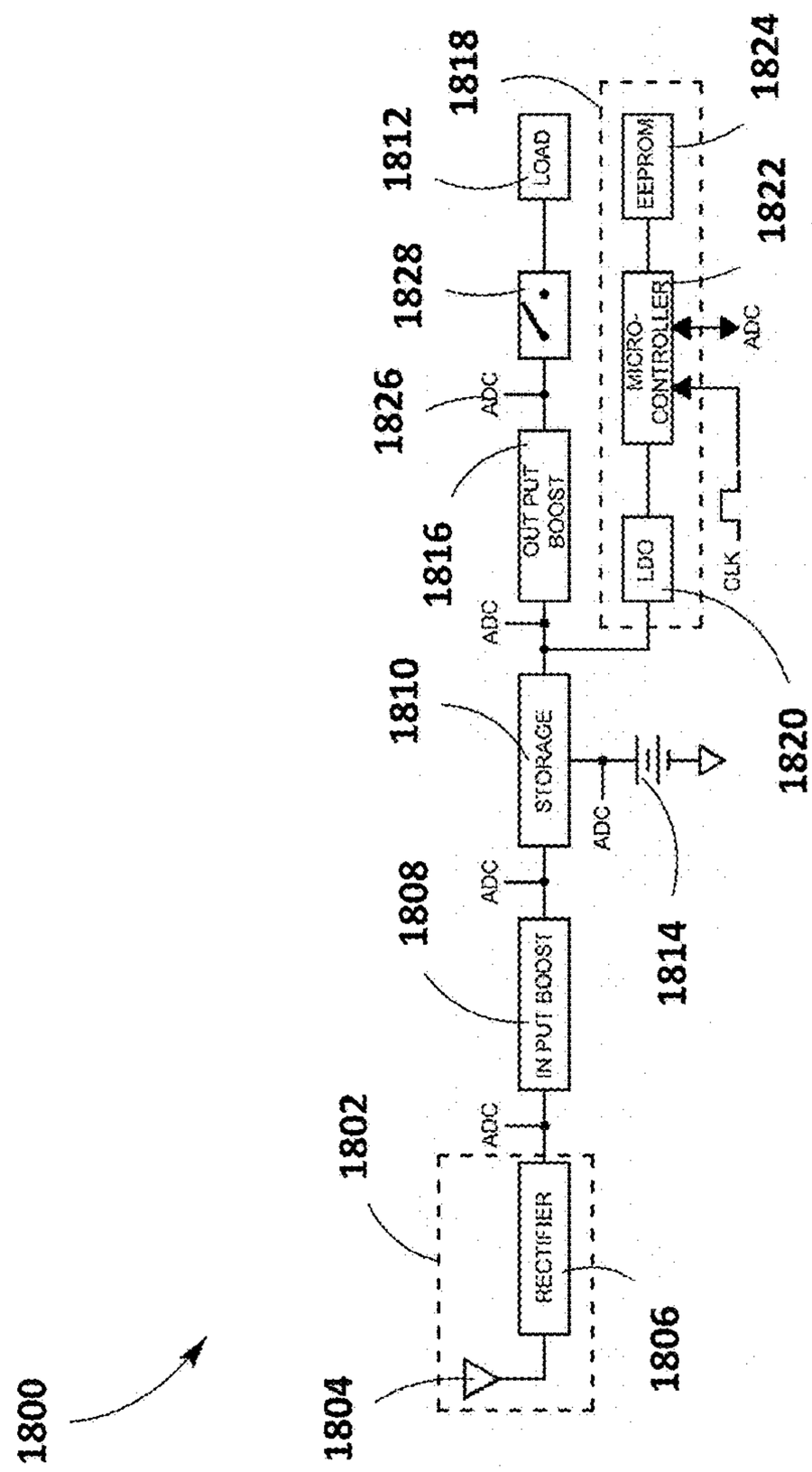
1800
1802
1804
RECTIFIER
1806
ADC
IN PUT BOOST
1808
ADC
STORAGE
1810
ADC
1814
1820
ADC
OUT PUT BOOST
1816
ADC
1826
1828
LOAD
1812
1818
LDO
CLK
MICRO-CONTROLLER
ADC
EEPROM
1822
1824

FIG. 18

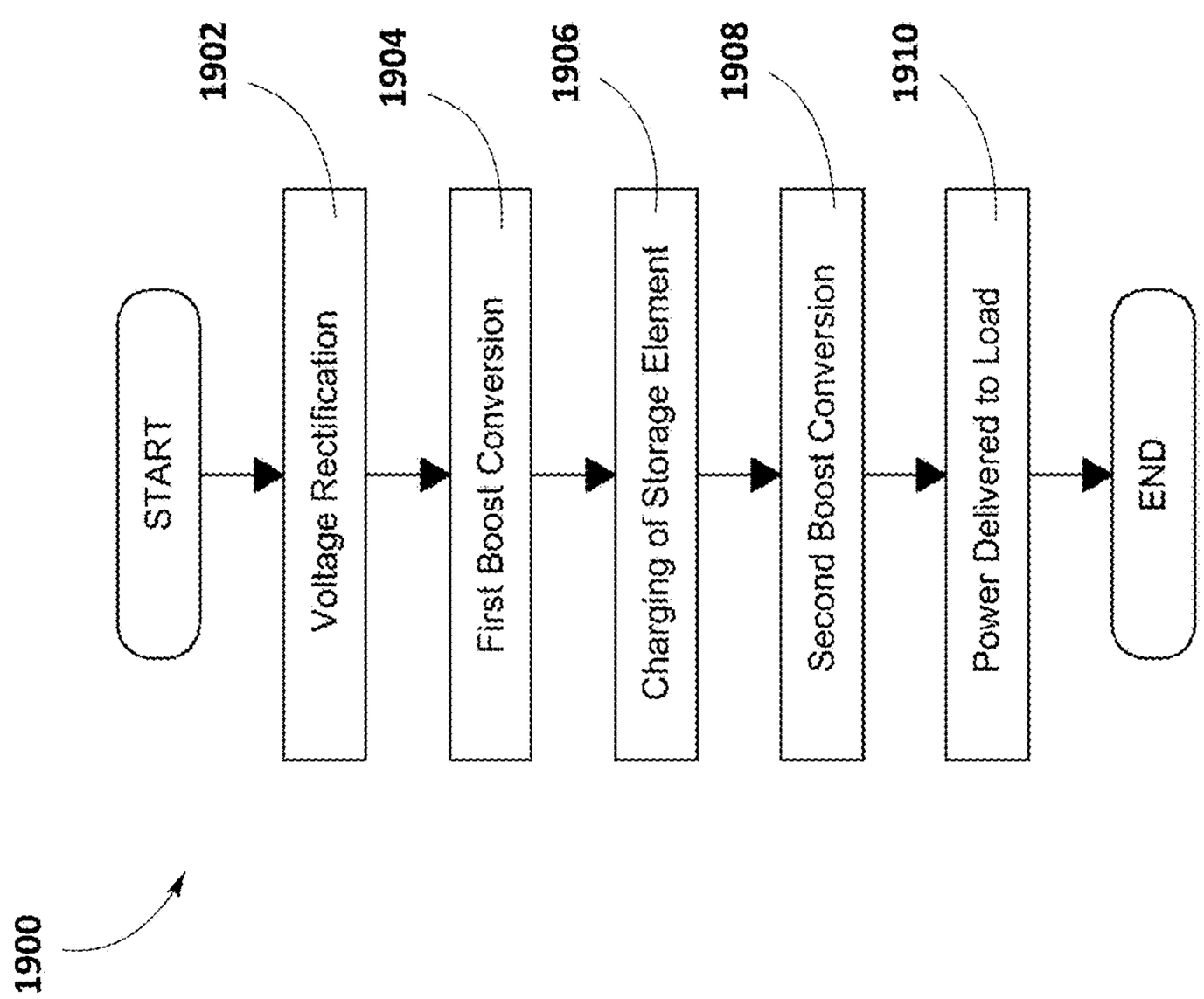
1900
START
1902
Voltage Rectification
1904
First Boost Conversion
1906
Charging of Storage Element
1908
Second Boost Conversion
1910
Power Delivered to Load
END

FIG. 19

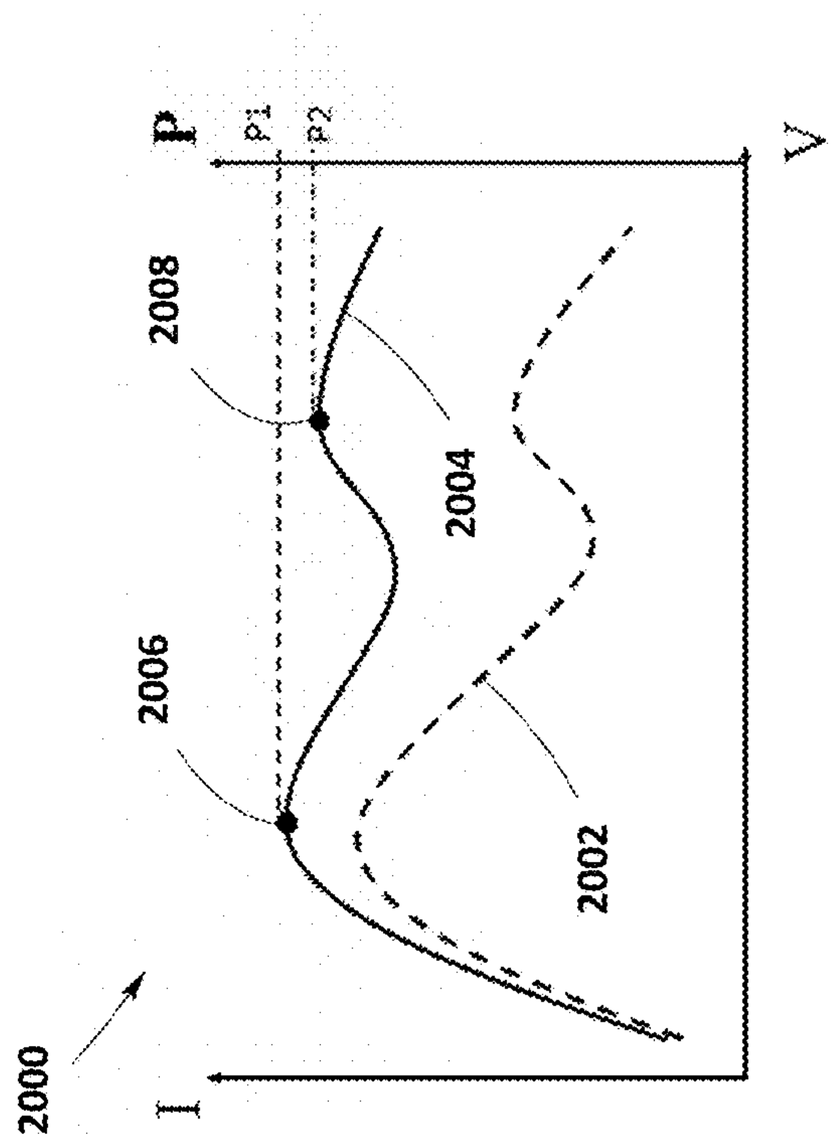

FIG. 20

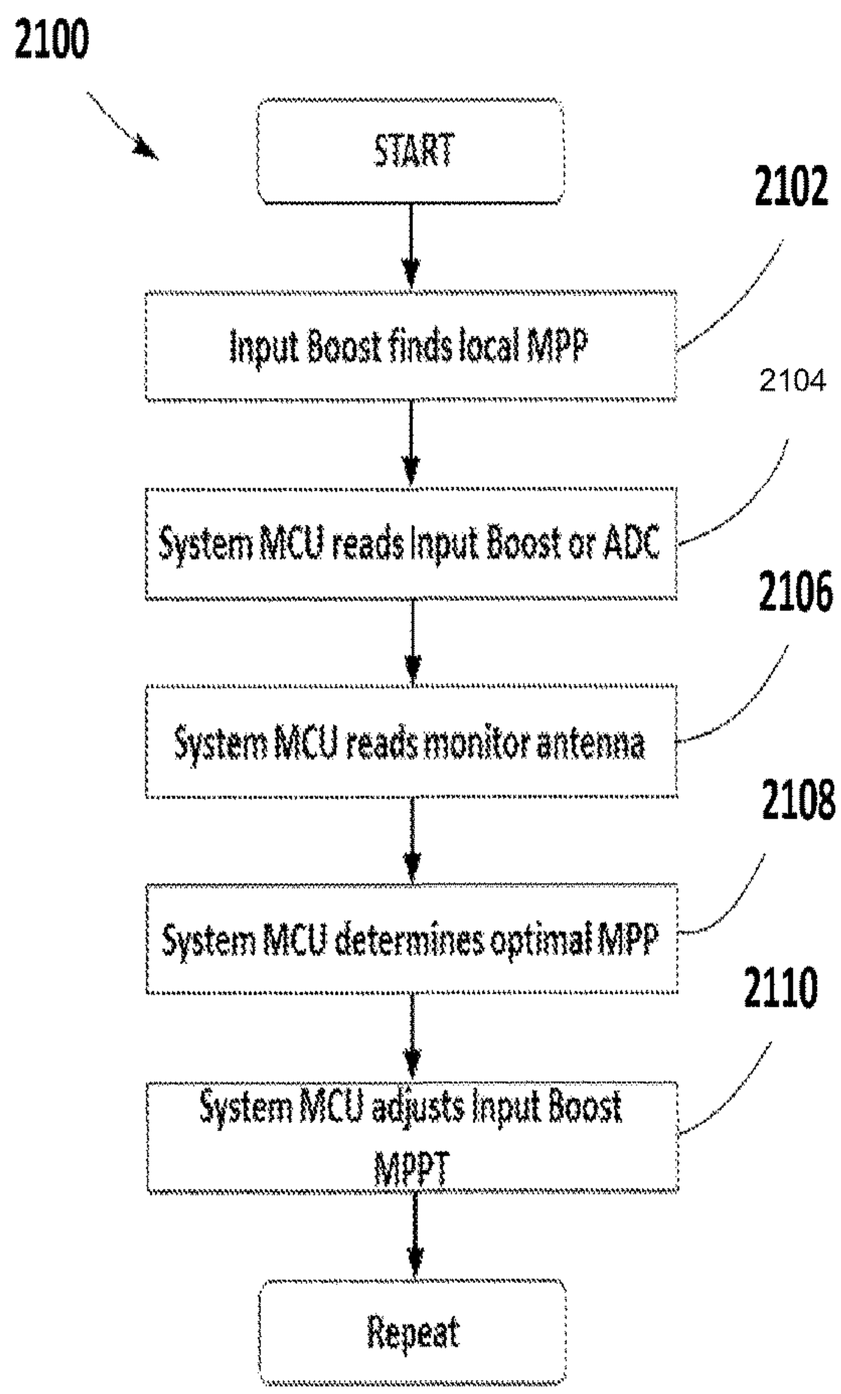
2100
START
2102
Input Boost finds local MPP
2104
System MCU reads Input Boost or ADC
2106
System MCU reads monitor antenna
2108
System MCU determines optimal MPP
2110
System MCU adjusts Input Boost MPPT
Repeat

FIG. 21

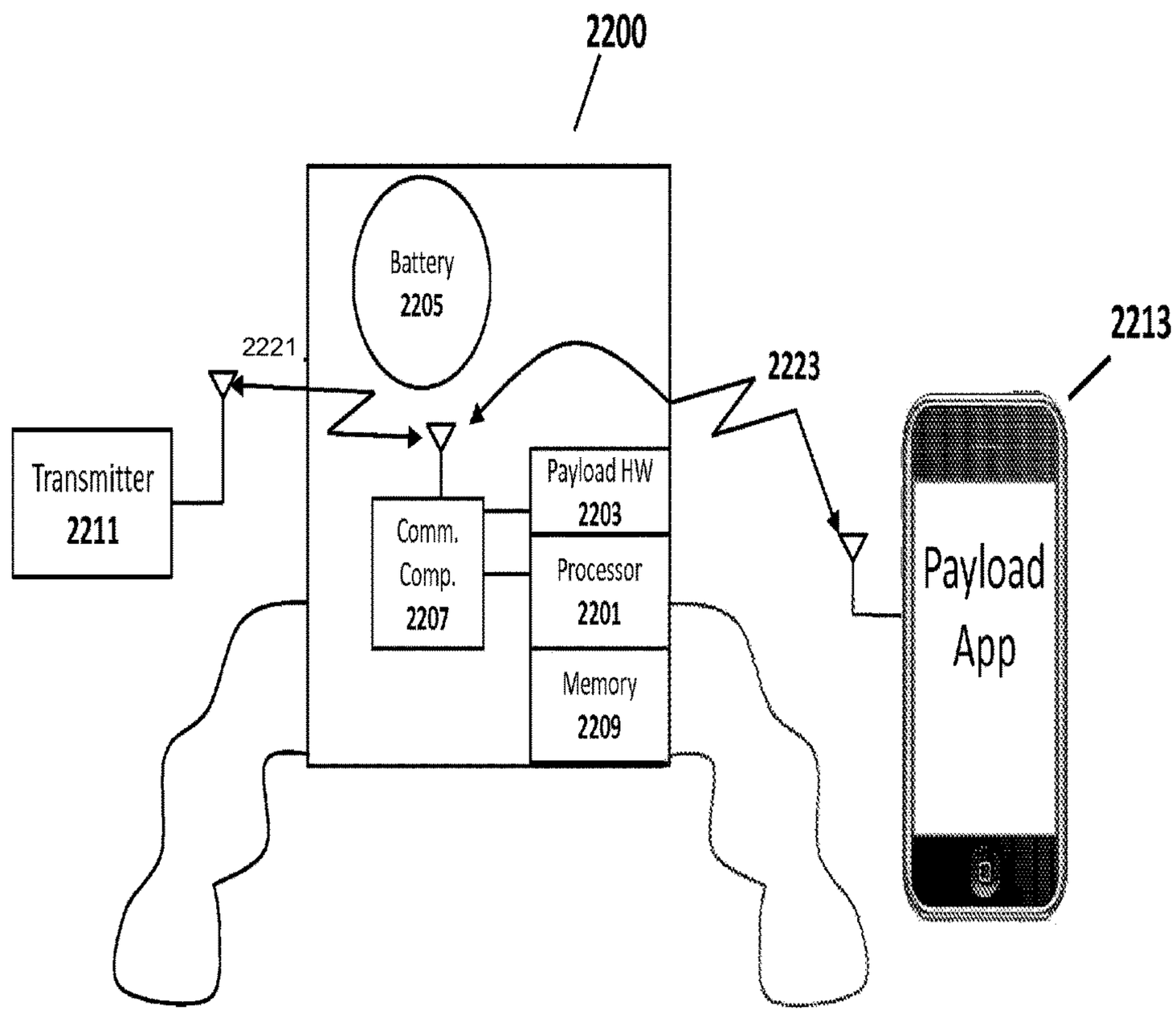
2200
Battery
2205
2221
2223
2213
Transmitter
2211
Comm.
Comp.
2207
Payload HW
2203
Processor
2201
Memory
2209
Payload
App

FIG. 22

POWER TRANSMISSION CONTROL SYSTEMS AND METHODS

CROSS-REFERENCE TO RELATED APPLICATIONS

This application claims priority to U.S. Non-Provisional patent application Ser. No. 14/272,179, entitled "Enhanced Receiver for Wireless Power Transmission," filed May 7, 2014; U.S. Non-Provisional patent application Ser. No. 14/272,207, entitled "Methods and Systems for Maximum Power Point Transfer in Receivers," filed May 7, 2014; U.S. Non-Provisional patent application Ser. No. 14/272,247, entitled "Synchronous Rectifier Design for Wireless Power Receiver," filed May 7, 2014; U.S. Non-Provisional patent application Ser. No. 14/272,287, entitled "Integrated Rectifier and Boost Converter For Wireless Power Transmission," filed May 7, 2014; U.S. Non-Provisional patent application Ser. No. 14/272,280, entitled "Boost-Charger-Boost System For Enhanced Power Delivery," filed May 7, 2014, all of which are incorporated by reference in their entirety.

This application relates to U.S. Non-Provisional patent application Ser. No. 14/583,625, filed Dec. 27, 2014, entitled "Receivers for Wireless Power Transmission," U.S. Non-Provisional patent application Ser. No. 14/583,630, filed Dec. 27, 2014, entitled "Methodology for Pocket-Forming," U.S. Non-Provisional patent application Ser. No. 14/583,634, filed Dec. 27, 2014, entitled "Transmitters for Wireless Power Transmission," U.S. Non-Provisional patent application Ser. No. 14/583,640, filed Dec. 27, 2014, entitled "Methodology for Multiple Pocket-Forming," U.S. Non-Provisional patent application Ser. No. 14/583,641, filed Dec. 27, 2014, entitled "Wireless Power Transmission with Selective Range," U.S. Non-Provisional patent application Ser. No. 14/583,643, filed Dec. 27, 2014, entitled "Method for 3 Dimensional Pocket-Forming;" all of which are hereby incorporated by reference in their entirety.

TECHNICAL FIELD

The present disclosure relates to wireless power transmission to battery-powered portable devices having various battery arrangements; i.e., a battery within the portable device or a battery outside of the portable device, and other variations of the hardware of the portable device.

BACKGROUND

Portable electronic devices such as smart phones, tablets, notebooks and other electronic devices have become an everyday need in the way we communicate and interact with others. The frequent use of these devices may require a significant amount of power, which may easily deplete the batteries attached to these devices. Therefore, a user is frequently needed to plug in the device to a power source, and recharge such device. This may require having to charge electronic equipment at least once a day, or in high-demand electronic devices more than once a day.

Such an activity may be tedious and may represent a burden to users. For example, a user may be required to carry chargers in case his electronic equipment is lacking power. In addition, users have to find available power sources to connect to an electronic device. Lastly, users must plugin to a wall or other power supply to be able to charge his or her electronic device. However, such an activity may render electronic devices inoperable during charging.

Current solutions to this problem may include devices having rechargeable batteries. However, the aforementioned approach requires a user to carry around extra batteries, and also make sure that the extra set of batteries is charged. Solar-powered battery chargers are also known, however, solar cells are expensive, and a large array of solar cells may be required to charge a battery of any significant capacity. Other approaches involve a mat or pad that allows charging of a device without physically connecting a plug of the device to an electrical outlet, by using electromagnetic signals. In this case, the device still requires to be placed in a certain location for a period of time in order to be charged. Assuming a single source power transmission of electromagnetic (EM) signal, an EM signal gets reduced by a factor proportional to $1/r^2$ in magnitude over a distance r, in other words, it is attenuated proportional to the square of the distance. Thus, the received power at a large distance from the EM transmitter is a small fraction of the power transmitted. To increase the power of the received signal, the transmission power would have to be boosted. Assuming that the transmitted signal has an efficient reception at three centimeters from the EM transmitter, receiving the same signal power over a useful distance of three meters would entail boosting the transmitted power by 10,000 times. Such power transmission is wasteful, as most of the energy would be transmitted and not received by the intended devices, it could be hazardous to living tissue, it would most likely interfere with most electronic devices in the immediate vicinity, and it may be dissipated as heat.

In yet another approach such as directional power transmission, it would generally require knowing the location of the device to be able to point the signal in the right direction to enhance the power transmission efficiency. However, even when the device is located, efficient transmission is not guaranteed due to reflections and interference of objects in the path or vicinity of the receiving device.

For the foregoing reasons, there is a need for a wireless power transmission system where electronic devices may be powered without requiring extra chargers or plugs, and where the mobility and portability of electronic devices may not be compromised. Therefore, a wireless power transmission method solving the aforementioned problems is desired.

Wearable portable electronic devices, such as headsets, smart-watches, light key-chains and other such wearable equipment may include batteries, for performing their intended functions. When batteries run out, such electronic devices may be inoperable and are often rendered unusable. This may be a burden for users which may need to carry extra batteries, whenever they go out, in case the aforementioned electronic devices run out of power. In the worst case scenario, batteries in such devices may not be replaceable. Thus, these devices may no longer be useful and may therefore be disposed as waste. This may have cost implications as well as environmental implications because users may not only have to re-purchase items, but also produce waste which may pollute the environment. For the foregoing reasons, there may be a need for increasing the battery life of the aforementioned electronic devices.

Wearable portable electronic devices such as headsets, smart-watches, light key-chains, and other similar devices, have also become an everyday need in the way we communicate, socialize and interact with others, and go about ordinary tasks, such as dieting or exercising. The frequent use of these devices may require a significant amount of power, which may easily deplete the batteries attached to these devices. Therefore, a user is frequently needed to plug

in the device to a power source, and recharge such device. This may be inconvenient and troublesome if the user forgets to plug in or otherwise charge a device, the device may run out of power and be of no use to the user until the user is again able to charge the device.

Wireless power transmission may be an answer for the situation described above, however wireless power transmission may usually need a transmitter and a receiver to work. There may be situations when transmitter, being the source of power, may be out of range with the receiver and hence no wireless power transmission may occur. In some situations carrying out an extra set of batteries may be a solution, however some portable electronic devices may have internal batteries that may not be easily replaced. For the foregoing reasons, there may be a need for increasing the battery life of the aforementioned electronic devices.

Wireless power transmission may be based on the extraction and conversion of power or energy from transmitted power transmission waves. One challenge that may be present during wireless power transmission is that power or energy extracted from power transmission waves may be variable due to inherent characteristics of the medium, such as air. Moreover, the power that can be extracted from power transmission waves may be zero at some instances of the wireless power transmission. The variability of the power extracted from power transmission waves may be fueled by interference produced by electronic devices, walls, metallic objects, and electromagnetic signals, among others.

What is needed is a wireless receiver, which may be integrated into a wearable portable device, and that may be capable of operating with a variable power source derived from power transmission waves. It may be also desirable to have a wireless receiver that may operate at low voltage or power levels. This may be particularly true in cases of wearable portable devices in which the power demands on the device must be kept to a minimum due to the smaller size of the wearable device.

SUMMARY

Embodiments disclosed herein relate to various arrangements of hardware for incorporating receiver functions into wearable portable devices. The embodiments described herein include a transmitter that transmits a power transmission signal (e.g., radio frequency (RF) signal waves) to create a three-dimensional pocket of energy. At least one receiver can be connected to or integrated into electronic devices and receive power from the pocket of energy. The transmitter can locate the at least one receiver in a three-dimensional space using a communication medium (e.g., Bluetooth technology). The transmitter generates a waveform to create a pocket of energy around each of the at least one receiver. The transmitter uses an algorithm to direct, focus, and control the waveform in three dimensions. The receiver can convert the transmission signals (e.g., RF signals) into electricity for powering an electronic device. Accordingly, the embodiments for wireless power transmission can allow powering and charging a plurality of electrical devices without wires.

In one embodiment, a wearable device receiving wireless power, the wearable device comprises one or more antenna elements configured to extract energy from one or more power transmission waves establishing a pocket of energy, and further configured to convert the energy of the power transmission waves to an electrical current; a communication component configured to transmit to a transmitter one or more control signals indicating a location of the wearable relative to the transmitter; a rectifier configured to convert the electrical current produced from the antenna elements from an alternating current (AC) to a direct current (DC); and a battery configured to store energy from the electrical current.

In another embodiment, a wearable device comprising payload hardware configured to capture one or more measurements in accordance with a payload application associated with the wearable device; a processor configured to execute the payload application according to one or more instructions received from a smart device; a communications component configured to communicate payload application data and payload application instructions with the smart device; and a power supply detachably coupled to a receiver, wherein the power supply of the wearable device receives electrical current from the receiver.

In another embodiment, a wireless power charging system comprises a wearable device comprising payload hardware configured to capture one or more measurements in accordance with a payload application associated with the wearable device; a processor configured to execute the payload application according to one or more instructions received from a smart device; and a communications component configured to communicate payload application data and payload application instructions with the smart device, wherein the wearable device is detachably coupled to a receiver, the receiver comprising: one or more antenna elements configured to extract energy from one or more power transmission waves in a pocket of energy, and convert the energy of the power transmission wave to an electrical current; and a rectifier configured to convert the electrical current produced from the antenna elements from an alternating current (AC) to a direct current (DC), wherein the DC current is provided to the wearable device.

Additional features and advantages of an embodiment will be set forth in the description which follows, and in part will be apparent from the description. The objectives and other advantages of the invention will be realized and attained by the structure particularly pointed out in the exemplary embodiments in the written description and claims hereof as well as the appended drawings.

It is to be understood that both the foregoing general description and the following detailed description are exemplary and explanatory and are intended to provide further explanation of the invention as claimed.

BRIEF DESCRIPTION OF THE DRAWINGS

The present disclosure can be better understood by referring to the following figures. The components in the figures are not necessarily to scale, emphasis instead being placed upon illustrating the principles of the disclosure. In the figures, reference numerals designate corresponding parts throughout the different views.

FIG. **1** illustrates a system overview, according to an exemplary embodiment.

FIG. **2** illustrates steps of wireless power transmission, according to an exemplary embodiment.

FIG. **3** illustrates an architecture for wireless power transmission, according to an exemplary embodiment.

FIG. **4** illustrates components of a system of wireless power transmission using pocket-forming procedures, according to an exemplary embodiment.

FIG. **5** illustrates steps of powering a plurality of receiver devices, according to an exemplary embodiment.

FIG. **6**A illustrates waveforms for wireless power transmission with selective range, which may get unified in single waveform.

FIG. **6**B illustrates waveforms for wireless power transmission with selective range, which may get unified in single waveform.

FIG. **7** illustrates wireless power transmission with selective range, where a plurality of pockets of energy may be generated along various radii from transmitter.

FIG. **8** illustrates wireless power transmission with selective range, where a plurality of pockets of energy may be generated along various radii from transmitter.

FIGS. **9**A and **9**B illustrate a diagram of an architecture for wirelessly charging client computing platform, according to an exemplary embodiment

FIG. **10**A illustrates wireless power transmission using multiple pocket-forming, according to an exemplary embodiment.

FIG. **10**B illustrates multiple adaptive pocket-forming, according to an exemplary embodiment.

FIG. **11** illustrates a diagram of a system architecture for wirelessly charging client devices, according to an exemplary embodiment.

FIG. **12** illustrates an electronic device including at least one embedded which may contain a backup battery, according to an embodiment.

FIG. **13** shows an example where a wearable electronic device may be employed for wireless power charging.

FIG. **14** illustrates an electronic device including at least one embedded receiver and at least one auxiliary power supply for improving a portable electronic device's main power supply life.

FIG. **15** illustrates an electronic wearable device in the form of a Bluetooth headset including at least one embedded receiver for providing wireless power transmission.

FIG. **16** illustrates an electronic wearable device in the form of a wristwatch including at least one embedded receiver, for providing wireless power transmission, which may further include at least one built-in communications device and at least one micro-controller.

FIG. **17** illustrates an algorithm for managing power loads on an electronic device.

FIG. **18** depicts a block diagram of an enhanced receiver that may be used for extracting and converting power from power transmission waves.

FIG. **19** shows a flowchart of a power transmission process that may be implemented by an enhanced receiver during wireless power transmission.

FIG. **20** illustrates the maximum power point transfer of characteristic curves, which may be used to change the voltage direction and adjust the operation of the receiver.

FIG. **21** shows a flowchart for the method enabled by a maximum power point transfer algorithm controlling the maximum power point transfer and operation of the input boost converter.

FIG. **22** shows a schematic representation of a wearable device.

While various aspects and embodiments have been disclosed herein, other aspects and embodiments are contemplated. The various aspects and embodiments disclosed herein are for purposes of illustration and are not intended to be limiting, with the true scope and spirit being indicated by the following claims

DETAILED DESCRIPTION

The present disclosure is here described in detail with reference to embodiments illustrated in the drawings, which form a part here. Other embodiments may be used and/or other changes may be made without departing from the spirit or scope of the present disclosure. The illustrative embodiments described in the detailed description are not meant to be limiting of the subject matter presented here. Furthermore, the various components and embodiments described herein may be combined to form additional embodiments not expressly described, without departing from the spirit or scope of the invention.

Reference will now be made to the exemplary embodiments illustrated in the drawings, and specific language will be used here to describe the same. It will nevertheless be understood that no limitation of the scope of the invention is thereby intended. Alterations and further modifications of the inventive features illustrated here, and additional applications of the principles of the inventions as illustrated here, which would occur to one skilled in the relevant art and having possession of this disclosure, are to be considered within the scope of the invention.

I. Systems and Methods for Wireless Power Transmissions

A. Components System Embodiment

FIG. **1** shows a system **100** for wireless power transmission by forming pockets of energy **104**. The system **100** may comprise transmitters **101**, receivers **103**, client devices **105**, and pocket detectors **107**. Transmitters **101** may transmit power transmission signals comprising power transmission waves, which may be captured by receivers **103**. The receivers **103** may comprise antennas, antenna elements, and other circuitry (detailed later), which may convert the captured waves into a useable source of electrical energy on behalf of client devices **105** associated with the receivers **103**. In some embodiments, transmitters **101** may transmit power transmission signals, made up of power transmission waves, in one or more trajectories by manipulating the phase, gain, and/or other waveform features of the power transmission waves, and/or by selecting different transmit antennas. In such embodiments, the transmitters **101** may manipulate the trajectories of the power transmission signals so that the underlying power transmission waves converge at a location in space, resulting in certain forms of interference. One type of interference generated at the convergence of the power transmission waves, "constructive interference," may be a field of energy caused by the convergence of the power transmission waves such that they add together and strengthen the energy concentrated at that location—in contrast to adding together in a way to subtract from each other and diminish the energy concentrated at that location, which is called "destructive interference". The accumulation of sufficient energy at the constructive interference may establish a field of energy, or "pocket of energy" **104**, which may be harvested by the antennas of a receiver **103**, provided the antennas are configured to operate on the frequency of the power transmission signals. Accordingly, the power transmission waves establish pockets of energy **104** at the location in space where the receivers **103** may receive, harvest, and convert the power transmission waves into useable electrical energy, which may power or charge associated electrical client devices **105**. Detectors **107** may be devices comprising a receiver **103** that are capable of producing a notification or alert in response to receiving power transmission signals. As an example, a user searching for the optimal placement of a receiver **103** to charge the user's client device **105** may use a detector **107** that comprises an LED light **108**, which may brighten when the detector **107** captures the power transmission signals from a single beam or a pocket of energy **104**.

1. Transmitters

The transmitter **101** may transmit or broadcast power transmission signals to a receiver **103** associated with a device **105**. Although several of the embodiments mentioned below describe the power transmission signals as radio frequency (RF) waves, it should be appreciated that the power transmission may be physical media that is capable of being propagated through space, and that is capable of being converted into a source of electrical energy **103**. The transmitter **101** may transmit the power transmission signals as a single beam directed at the receivers **103**. In some cases, one or more transmitters **101** may transmit a plurality of power transmission signals that are propagated in a multiple directions and may deflect off of physical obstructions (e.g., walls). The plurality of power transmission signals may converge at a location in a three-dimensional space, forming a pocket of energy **104**. Receivers **103** within the boundaries of an energy pocket **104** may capture and covert the power transmission signals into a useable source of energy. The transmitter **101** may control pocket-forming based on phase and/or relative amplitude adjustments of power transmission signals, to form constructive interference patterns.

Although the exemplary embodiment recites the use of RF wave transmission techniques, the wireless charging techniques should not be limited to RF wave transmission techniques. Rather, it should be appreciated that possible wireless charging techniques may include any number of alternative or additional techniques for transmitting energy to a receiver converting the transmitted energy to electrical power. Non-limiting exemplary transmission techniques for energy that can be converted by a receiving device into electrical power may include: ultrasound, microwave, resonant and inductive magnetic fields, laser light, infrared, or other forms of electromagnetic energy. In the case of ultrasound, for example, one or more transducer elements may be disposed so as to form a transducer array that transmits ultrasound waves toward a receiving device that receives the ultrasound waves and converts them to electrical power. In the case of resonant or inductive magnetic fields, magnetic fields are created in a transmitter coil and converted by a receiver coil into electrical power. In addition, although the exemplary transmitter **101** is shown as a single unit comprising potentially multiple transmitters (transmit array), both for RF transmission of power and for other power transmission methods mentioned in this paragraph, the transmit arrays can comprise multiple transmitters that are physically spread around a room rather than being in a compact regular structure.

The transmitter includes an antenna array where the antennas are used for sending the power transmission signal. Each antenna sends power transmission waves where the transmitter applies a different phase and amplitude to the signal transmitted from different antennas. Similar to the formation of pockets of energy, the transmitter can form a phased array of delayed versions of the signal to be transmitted, then applies different amplitudes to the delayed versions of the signal, and then sends the signals from appropriate antennas. For a sinusoidal waveform, such as an RF signal, ultrasound, microwave, or others, delaying the signal is similar to applying a phase shift to the signal.

2. Pockets of Energy

A pocket of energy **104** may be formed at locations of constructive interference patterns of power transmission signals transmitted by the transmitter **101**. The pockets of energy **104** may manifest as a three-dimensional field where energy may be harvested by receivers **103** located within the pocket of energy **104**. The pocket of energy **104** produced by transmitters **101** during pocket-forming may be harvested by a receiver **103**, converted to an electrical charge, and then provided to electronic client device **105** associated with the receiver **103** (e.g., laptop computer, smartphone, rechargeable battery). In some embodiments, there may be multiple transmitters **101** and/or multiple receivers **103** powering various client devices **105**. In some embodiments, adaptive pocket-forming may adjust transmission of the power transmission signals in order to regulate power levels and/or identify movement of the devices **105**.

3. Receivers

A receiver **103** may be used for powering or charging an associated client device **105**, which may be an electrical device coupled to or integrated with the receiver **103**. The receiver **103** may receive power transmission waves from one or more power transmission signals originating from one or more transmitters **101**. The receiver **103** may receive the power transmission signals as a single beam produced by the transmitter **101**, or the receiver **103** may harvest power transmission waves from a pocket of energy **104**, which may be a three-dimensional field in space resulting from the convergence of a plurality of power transmission waves produced by one or more transmitters **101**. The receiver **103** may comprise an array of antennas **112** configured to receive power transmission waves from a power transmission signal and harvest the energy from the power transmission signals of the single beam or pocket of energy **104**. The receiver **103** may comprise circuitry that then converts the energy of the power transmission signals (e.g., the radio frequency electromagnetic radiation) to electrical energy. A rectifier of the receiver **103** may translate the electrical energy from AC to DC. Other types of conditioning may be applied, as well. For example, a voltage conditioning circuit may increase or decrease the voltage of the electrical energy as required by the client device **105**. An electrical relay may then convey the electrical energy from the receiver **103** to the client device **105**.

In some embodiments, the receiver **103** may comprise a communications component that transmits control signals to the transmitter **101** in order to exchange data in real-time or near real-time. The control signals may contain status information about the client device **105**, the receiver **103**, or the power transmission signals. Status information may include, for example, present location information of the device **105**, amount of charge received, amount of charged used, and user account information, among other types of information. Further, in some applications, the receiver **103** including the rectifier that it contains may be integrated into the client device **105**. For practical purposes, the receiver **103**, wire **111**, and client device **105** may be a single unit contained in a single packaging.

4. Control Signals

In some embodiments, control signals may serve as data inputs used by the various antenna elements responsible for controlling production of power transmission signals and/or pocket-forming. Control signals may be produced by the receiver **103** or the transmitter **101** using an external power supply (not shown) and a local oscillator chip (not shown), which in some cases may include using a piezoelectric material. Control signals may be RF waves or any other communication medium or protocol capable of communicating data between processors, such as Bluetooth®, RFID, infrared, near-field communication (NFC). As detailed later, control signals may be used to convey information between the transmitter **101** and the receiver **103** used to adjust the power transmission signals, as well as contain information

related to status, efficiency, user data, power consumption, billing, geo-location, and other types of information.

5. Detectors

A detector **107** may comprise hardware similar to receivers **103**, which may allow the detector **107** to receive power transmission signals originating from one or more transmitters **101**. The detector **107** may be used by users to identify the location of pockets of energy **104**, so that users may determine the preferable placement of a receiver **103**. In some embodiments, the detector **107** may comprise an indicator light **108** that indicates when the detector is placed within the pocket of energy **104**. As an example, in FIG. **1**, detectors **107***a*, **107***b* are located within the pocket of energy **104** generated by the transmitter **101**, which may trigger the detectors **107***a*, **107***b* to turn on their respective indicator lights **108***a*, **108***b*, because the detectors **107***a*, **107***b* are receiving power transmission signals of the pocket of energy **104**; whereas, the indicator light **108***c* of a third detector **107***c* located outside of the pockets of energy **104**, is turned off, because the third detector **107***c* is not receiving the power transmission signals from the transmitter **101**. It should be appreciated that the functions of a detector, such as the indicator light, may be integrated into a receiver or into a client device in alternative embodiments as well.

6. Client Device

A client device **105** may be any electrical device that requires continuous electrical energy or that requires power from a battery. Non-limiting examples of client devices **105** may include laptops, mobile phones, smartphones, tablets, music players, toys, batteries, flashlights, lamps, electronic watches, cameras, gaming consoles, appliances, GPS devices, and wearable devices or so-called "wearables" (e.g., fitness bracelets, pedometers, smartwatch), among other types of electrical devices.

In some embodiments, the client device **105***a* may be a physical device distinct from the receiver **103***a* associated with the client device **105***a*. In such embodiments, the client device **105***a* may be connected to the receiver over a wire **111** that conveys converted electrical energy from the receiver **103***a* to the client device **105***a*. In some cases, other types of data may be transported over the wire **111**, such as power consumption status, power usage metrics, device identifiers, and other types of data.

In some embodiments, the client device **105***b* may be permanently integrated or detachably coupled to the receiver **103***b*, thereby forming a single integrated product or unit. As an example, the client device **105***b* may be placed into a sleeve that has embedded receivers **103***b* and that may detachably couple to the device's **105***b* power supply input, which may be typically used to charge the device's **105***b* battery. In this example, the device **105***b* may be decoupled from the receiver, but may remain in the sleeve regardless of whether or not the device **105***b* requires an electrical charge or is being used. In another example, in lieu of having a battery that holds a charge for the device **105***b*, the device **105***b* may comprise an integrated receiver **105***b*, which may be permanently integrated into the device **105***b* so as to form an indistinct product, device, or unit. In this example, the device **105***b* may rely almost entirely on the integrated receiver **103***b* to produce electrical energy by harvesting pockets of energy **104**. It should be clear to someone skilled in the art that the connection between the receiver **103** and the client device **105** may be a wire **111** or may be an electrical connection on a circuit board or an integrated circuit, or even a wireless connection, such as inductive or magnetic.

B. Method of Wireless Power Transmission

FIG. **2** shows steps of wireless power transmission, according to an exemplary method **200** embodiment.

In a first step **201**, a transmitter (TX) establishes a connection or otherwise associates with a receiver (RX). That is, in some embodiments, transmitters and receivers may communicate control data over using a wireless communication protocol capable of transmitting information between two processors of electrical devices (e.g., Bluetooth®, Bluetooth Low Energy (BLE), Wi-Fi, NFC, ZigBee®). For example, in embodiments implementing Bluetooth® or Bluetooth® variants, the transmitter may scan for receiver's broadcasting advertisement signals or a receiver may transmit an advertisement signal to the transmitter. The advertisement signal may announce the receiver's presence to the transmitter, and may trigger an association between the transmitter and the receiver. As described herein, in some embodiments, the advertisement signal may communicate information that may be used by various devices (e.g., transmitters, client devices, server computers, other receivers) to execute and manage pocket-forming procedures. Information contained within the advertisement signal may include a device identifier (e.g., MAC address, IP address, UUID), the voltage of electrical energy received, client device power consumption, and other types of data related to power transmission. The transmitter may use the advertisement signal transmitted to identify the receiver and, in some cases, locate the receiver in a two-dimensional space or in a three-dimensional space. Once the transmitter identifies the receiver, the transmitter may establish the connection associated in the transmitter with the receiver, allowing the transmitter and receiver to communicate control signals over a second channel.

In a next step **203**, the transmitter may use the advertisement signal to determine a set of power transmission signal features for transmitting the power transmission signals, to then establish the pockets of energy. Non-limiting examples of features of power transmission signals may include phase, gain, amplitude, magnitude, and direction among others. The transmitter may use information contained in the receiver's advertisement signal, or in subsequent control signals received from the receiver, to determine how to produce and transmit the power transmission signals so that the receiver may receive the power transmission signals. In some cases, the transmitter may transmit power transmission signals in a way that establishes a pocket of energy, from which the receiver may harvest electrical energy. In some embodiments, the transmitter may comprise a processor executing software modules capable of automatically identifying the power transmission signal features needed to establish a pocket of energy based on information received from the receiver, such as the voltage of the electrical energy harvested by the receiver from the power transmission signals. It should be appreciated that in some embodiments, the functions of the processor and/or the software modules may be implemented in an Application Specific Integrated Circuit (ASIC).

Additionally or alternatively, in some embodiments, the advertisement signal or subsequent signal transmitted by the receiver over a second communications channel may indicate one or more power transmission signals features, which the transmitter may then use to produce and transmit power transmission signals to establish a pocket of energy. For example, in some cases the transmitter may automatically identify the phase and gain necessary for transmitting the power transmission signals based on the location of the device and the type of device or receiver; and, in some cases,

the receiver may inform the transmitter the phase and gain for effectively transmitting the power transmission signals.

In a next step **205**, after the transmitter determines the appropriate features to use when transmitting the power transmission signals, the transmitter may begin transmitting power transmission signals, over a separate channel from the control signals. Power transmission signals may be transmitted to establish a pocket of energy. The transmitter's antenna elements may transmit the power transmission signals such that the power transmission signals converge in a two-dimensional or three-dimensional space around the receiver. The resulting field around the receiver forms a pocket of energy from which the receiver may harvest electrical energy. One antenna element may be used to transmit power transmission signals to establish two-dimensional energy transmissions; and in some cases, a second or additional antenna element may be used to transmit power transmission signals in order to establish a three-dimensional pocket of energy. In some cases, a plurality of antenna elements may be used to transmit power transmission signals in order to establish the pocket of energy. Moreover, in some cases, the plurality of antennas may include all of the antennas in the transmitter; and, in some cases, the plurality of antennas may include a number of the antennas in the transmitter, but fewer than all of the antennas of the transmitter.

As previously mentioned, the transmitter may produce and transmit power transmission signals, according to a determined set of power transmission signal features, which may be produced and transmitted using an external power source and a local oscillator chip comprising a piezoelectric material. The transmitter may comprise an RFIC that controls production and transmission of the power transmission signals based on information related to power transmission and pocket-forming received from the receiver. This control data may be communicated over a different channel from the power transmission signals, using wireless communications protocols, such as BLE, NFC, or ZigBee®. The RFIC of the transmitter may automatically adjust the phase and/or relative magnitudes of the power transmission signals as needed. Pocket-forming is accomplished by the transmitter transmitting the power transmission signals in a manner that forms constructive interference patterns.

Antenna elements of the transmitter may use concepts of wave interference to determine certain power transmission signals features (e.g., direction of transmission, phase of power transmission signal wave), when transmitting the power transmission signals during pocket-forming. The antenna elements may also use concepts of constructive interference to generate a pocket of energy, but may also utilize concepts of deconstructive interference to generate a transmission null in a particular physical location.

In some embodiments, the transmitter may provide power to a plurality of receivers using pocket-forming, which may require the transmitter to execute a procedure for multiple pocket-forming. A transmitter comprising a plurality of antenna elements may accomplish multiple pocket-forming by automatically computing the phase and gain of power transmission signal waves, for each antenna element of the transmitter tasked with transmitting power transmission signals the respective receivers. The transmitter may compute the phase and gains independently, because multiple wave paths for each power transmission signal may be generated by the transmitter's antenna elements to transmit the power transmission signals to the respective antenna elements of the receiver.

As an example of the computation of phase/gain adjustments for two antenna elements of the transmitter transmitting two signals, say X and Y where Y is 180 degree phase shifted version of X ($Y=-X$). At a physical location where the cumulative received waveform is $X-Y$, a receiver receives $X-Y=X+X=2X$, whereas at a physical location where the cumulative received waveform is $X+Y$, a receiver receives $X+Y=X-X=0$.

In a next step **207**, the receiver may harvest or otherwise receive electrical energy from power transmission signals of a single beam or a pocket of energy. The receiver may comprise a rectifier and AC/DC converter, which may convert the electrical energy from AC current to DC current, and a rectifier of the receiver may then rectify the electrical energy, resulting in useable electrical energy for a client device associated with the receiver, such as a laptop computer, smartphone, battery, toy, or other electrical device. The receiver may utilize the pocket of energy produced by the transmitter during pocket-forming to charge or otherwise power the electronic device.

In next step **209**, the receiver may generate control data containing information indicating the effectiveness of the single beam or energy pockets providing the receiver power transmission signals. The receiver may then transmit control signals containing the control data, to the transmitter. The control signals may be transmitted intermittently, depending on whether the transmitter and receiver are communicating synchronously (i.e., the transmitter is expecting to receive control data from the receiver). Additionally, the transmitter may continuously transmit the power transmission signals to the receiver, irrespective of whether the transmitter and receiver are communicating control signals. The control data may contain information related to transmitting power transmission signals and/or establishing effective pockets of energy. Some of the information in the control data may inform the transmitter how to effectively produce and transmit, and in some cases adjust, the features of the power transmission signals. Control signals may be transmitted and received over a second channel, independent from the power transmission signals, using a wireless protocol capable of transmitting control data related to power transmission signals and/or pocket-forming, such as BLE, NFC, Wi-Fi, or the like.

As mentioned, the control data may contain information indicating the effectiveness of the power transmission signals of the single beam or establishing the pocket of energy. The control data may be generated by a processor of the receiver monitoring various aspects of receiver and/or the client device associated with the receiver. The control data may be based on various types of information, such as the voltage of electrical energy received from the power transmission signals, the quality of the power transmission signals reception, the quality of the battery charge or quality of the power reception, and location or motion of the receiver, among other types of information useful for adjusting the power transmission signals and/or pocket-forming.

In some embodiments, a receiver may determine the amount of power being received from power transmission signals transmitted from the transmitter and may then indicate that the transmitter should "split" or segment the power transmission signals into less-powerful power transmission signals. The less-powerful power transmission signals may be bounced off objects or walls nearby the device, thereby reducing the amount of power being transmitted directly from the transmitter to the receiver.

In a next step **211**, the transmitter may calibrate the antennas transmitting the power transmission signals, so that

the antennas transmit power transmission signals having a more effective set of feature (e.g., direction, phase, gain, amplitude). In some embodiments, a processor of the transmitter may automatically determine more effective features for producing and transmitting the power transmission signals based on a control signal received from the receiver. The control signal may contain control data, and may be transmitted by the receiver using any number of wireless communication protocols (e.g., BLE, Wi-Fi, ZigBee®). The control data may contain information expressly indicating the more effective features for the power transmission waves; or the transmitter may automatically determine the more effective features based on the waveform features of the control signal (e.g., shape, frequency, amplitude). The transmitter may then automatically reconfigure the antennas to transmit recalibrated power transmission signals according to the newly determined more-effective features. For example, the processor of the transmitter may adjust gain and/or phase of the power transmission signals, among other features of power transmission feature, to adjust for a change in location of the receiver, after a user moved the receiver outside of the three-dimensional space where the pocket of energy is established.

C. System Architecture of Power Transmission System

FIG. **3** illustrates an architecture **300** for wireless power transmission using pocket-forming, according to an exemplary embodiment. "Pocket-forming" may refer to generating two or more power transmission waves **342** that converge at a location in three-dimensional space, resulting in constructive interference patterns at that location. A transmitter **302** may transmit and/or broadcast controlled power transmission waves **342** (e.g., microwaves, radio waves, ultrasound waves) that may converge in three-dimensional space. These power transmission waves **342** may be controlled through phase and/or relative amplitude adjustments to form constructive interference patterns (pocket-forming) in locations where a pocket of energy is intended. It should be understood also that the transmitter can use the same principles to create destructive interference in a location thereby creating a transmission null—a location where transmitted power transmission waves cancel each other out substantially and no significant energy can be collected by a receiver. In typical use cases the aiming of a power transmission signal at the location of the receiver is the objective; and in other cases it may be desirable to specifically avoid power transmission to a particular location; and in other cases it may be desirable to aim power transmission signal at a location while specifically avoiding transmission to a second location at the same time. The transmitter takes the use case into account when calibrating antennas for power transmission.

Antenna elements **306** of the transmitter **302** may operate in single array, pair array, quad array, or any other suitable arrangement that may be designed in accordance with the desired application. Pockets of energy may be formed at constructive interference patterns where the power transmission waves **342** accumulate to form a three-dimensional field of energy, around which one or more corresponding transmission null in a particular physical location may be generated by destructive interference patterns. Transmission null in a particular physical location-may refer to areas or regions of space where pockets of energy do not form because of destructive interference patterns of power transmission waves **342**.

A receiver **320** may then utilize power transmission waves **342** emitted by the transmitter **302** to establish a pocket of energy, for charging or powering an electronic device **313**, thus effectively providing wireless power transmission. Pockets of energy may refer to areas or regions of space where energy or power may accumulate in the form of constructive interference patterns of power transmission waves **342**. In other situations there can be multiple transmitters **302** and/or multiple receivers **320** for powering various electronic equipment for example smartphones, tablets, music players, toys and others at the same time. In other embodiments, adaptive pocket-forming may be used to regulate power on electronic devices. Adaptive pocket-forming may refer to dynamically adjusting pocket-forming to regulate power on one or more targeted receivers.

Receiver **320** may communicate with transmitter **302** by generating a short signal through antenna elements **324** in order to indicate its position with respect to the transmitter **302**. In some embodiments, receiver **320** may additionally utilize a network interface card (not shown) or similar computer networking component to communicate through a network **340** with other devices or components of the system **300**, such as a cloud computing service that manages several collections of transmitters **302**. The receiver **320** may comprise circuitry **308** for converting the power transmission signals **342** captured by the antenna elements **324**, into electrical energy that may be provided to and electric device **313** and/or a battery of the device **315**. In some embodiments, the circuitry may provide electrical energy to a battery of receiver **335**, which may store energy without the electrical device **313** being communicatively coupled to the receiver **320**.

Communications components **324** may enable receiver **320** to communicate with the transmitter **302** by transmitting control signals **345** over a wireless protocol. The wireless protocol can be a proprietary protocol or use a conventional wireless protocol, such as Bluetooth®, BLE, Wi-Fi, NFC, ZigBee, and the like. Communications component **324** may then be used to transfer information, such as an identifier for the electronic device **313**, as well as battery level information, geographic location data, or other information that may be of use for transmitter **302** in determining when to send power to receiver **320**, as well as the location to deliver power transmission waves **342** creating pockets of energy. In other embodiments, adaptive pocket-forming may be used to regulate power provided to electronic devices **313**. In such embodiments, the communications components **324** of the receiver may transmit voltage data indicating the amount of power received at the receiver **320**, and/or the amount of voltage provided to an electronic device **313***b* or battery **315**.

Once transmitter **302** identifies and locates receiver **320**, a channel or path for the control signals **345** can be established, through which the transmitter **302** may know the gain and phases of the control signals **345** coming from receiver **320**. Antenna elements **306** of the transmitter **302** may start to transmit or broadcast controlled power transmission waves **342** (e.g., radio frequency waves, ultrasound waves), which may converge in three-dimensional space by using at least two antenna elements **306** to manipulate the power transmission waves **342** emitted from the respective antenna element **306**. These power transmission waves **342** may be produced by using an external power source and a local oscillator chip using a suitable piezoelectric material. The power transmission waves **342** may be controlled by transmitter circuitry **301**, which may include a proprietary chip for adjusting phase and/or relative magnitudes of power transmission waves **342**. The phase, gain, amplitude, and other waveform features of the power transmission waves **342** may serve as inputs for antenna element **306** to form constructive and destructive interference patterns (pocket-

forming). In some implementations, a micro-controller **310** or other circuit of the transmitter **302** may produce a power transmission signal, which comprises power transmission waves **342**, and that may be may split into multiple outputs by transmitter circuitry **301**, depending on the number of antenna elements **306** connected to the transmitter circuitry **301**. For example, if four antenna elements **306***a-d* are connected to one transmitter circuit **301***a*, the power transmission signal will be split into four different outputs each output going to an antenna element **306** to be transmitted as power transmission waves **342** originating from the respective antenna elements **306**.

Pocket-forming may take advantage of interference to change the directionality of the antenna element **306** where constructive interference generates a pocket of energy and destructive interference generates a transmission null. Receiver **320** may then utilize pocket of energy produced by pocket-forming for charging or powering an electronic device and therefore effectively providing wireless power transmission.

Multiple pocket-forming may be achieved by computing the phase and gain from each antenna **306** of transmitter **302** to each receiver **320**.

D. Components of Systems Forming Pockets of Energy

FIG. **4** shows components of an exemplary system **400** of wireless power transmission using pocket-forming procedures. The system **400** may comprise one or more transmitters **402**, one or more receivers **420**, and one or more client devices **446**.

1. Transmitters

Transmitters **402** may be any device capable of broadcasting wireless power transmission signals, which may be RF waves **442**, for wireless power transmission, as described herein. Transmitters **402** may be responsible for performing tasks related to transmitting power transmission signals, which may include pocket-forming, adaptive pocket-forming, and multiple pocket-forming. In some implementations, transmitters **402** may transmit wireless power transmissions to receivers **420** in the form of RF waves, which may include any radio signal having any frequency or wavelength. A transmitter **402** may include one or more antenna elements **406**, one or more RFICs **408**, one or more microcontrollers **410**, one or more communication components **412**, a power source **414**, and a housing that may allocate all the requested components for the transmitter **402**. The various components of transmitters **402** may comprise, and/or may be manufactured using, meta-materials, micro-printing of circuits, nano-materials, and the like.

In the exemplary system **400**, the transmitter **402** may transmit or otherwise broadcast controlled RF waves **442** that converge at a location in three-dimensional space, thereby forming a pocket of energy **444**. These RF waves may be controlled through phase and/or relative amplitude adjustments to form constructive or destructive interference patterns (i.e., pocket-forming). Pockets of energy **444** may be fields formed at constructive interference patterns and may be three-dimensional in shape; whereas transmission null in a particular physical location may be generated at destructive interference patterns. Receivers **420** may harvest electrical energy from the pockets of energy **444** produced by pocket-forming for charging or powering an electronic client device **446** (e.g., a laptop computer, a cell phone). In some embodiments, the system **400** may comprise multiple transmitters **402** and/or multiple receivers **420**, for powering various electronic equipment. Non-limiting examples of client devices **446** may include: smartphones, tablets, music players, toys and others at the same time. In some embodiments, adaptive pocket-forming may be used to regulate power on electronic devices.

2. Receivers

Receivers **420** may include a housing where at least one antenna element **424**, one rectifier **426**, one power converter **428**, and a communications component **430** may be included.

Housing of the receiver **420** can be made of any material capable of facilitating signal or wave transmission and/or reception, for example plastic or hard rubber. Housing may be an external hardware that may be added to different electronic equipment, for example in the form of cases, or can be embedded within electronic equipment as well.

3. Antenna Elements

Antenna elements **424** of the receiver **420** may comprise any type of antenna capable of transmitting and/or receiving signals in frequency bands used by the transmitter **402**A. Antenna elements **424** may include vertical or horizontal polarization, right hand or left hand polarization, elliptical polarization, or other polarizations, as well as any number of polarization combinations. Using multiple polarizations can be beneficial in devices where there may not be a preferred orientation during usage or whose orientation may vary continuously through time, for example a smartphone or portable gaming system. For devices having a well-defined expected orientation (e.g., a two-handed video game controller), there might be a preferred polarization for antennas, which may dictate a ratio for the number of antennas of a given polarization. Types of antennas in antenna elements **424** of the receiver **420**, may include patch antennas, which may have heights from about ⅛ inch to about 6 inches and widths from about ⅛ inch to about 6 inches. Patch antennas may preferably have polarization that depends upon connectivity, i.e., the polarization may vary depending on from which side the patch is fed. In some embodiments, the type of antenna may be any type of antenna, such as patch antennas, capable of dynamically varying the antenna polarization to optimize wireless power transmission.

4. Rectifier

Rectifiers **426** of the receiver **420** may include diodes, resistors, inductors, and/or capacitors to rectify alternating current (AC) voltage generated by antenna elements **424** to direct current (DC) voltage. Rectifiers **426** may be placed as close as is technically possible to antenna elements A**24**B to minimize losses in electrical energy gathered from power transmission signals. After rectifying AC voltage, the resulting DC voltage may be regulated using power converters **428**. Power converters **428** can be a DC-to-DC converter that may help provide a constant voltage output, regardless of input, to an electronic device, or as in this exemplary system **400**, to a battery. Typical voltage outputs can be from about 5 volts to about 10 volts. In some embodiments, power converter may include electronic switched mode DC-DC converters, which can provide high efficiency. In such embodiments, the receiver **420** may comprise a capacitor (not shown) that is situated to receive the electrical energy before power converters **428**. The capacitor may ensure sufficient current is provided to an electronic switching device (e.g., switch mode DC-DC converter), so it may operate effectively. When charging an electronic device, for example a phone or laptop computer, initial high-currents that can exceed the minimum voltage needed to activate operation of an electronic switched mode DC-DC converter, may be required. In such a case, a capacitor (not shown) may be added at the output of receivers **420** to provide the extra energy required. Afterwards, lower power can be provided.

For example, 1/80 of the total initial power that may be used while having the phone or laptop still build-up charge.

5. Communications Component

A communications component **430** of a receiver **420** may communicate with one or more other devices of the system **400**, such as other receivers **420**, client devices, and/or transmitters **402**. Different antenna, rectifier or power converter arrangements are possible for a receiver as will be explained in following embodiments.

E. Methods of Pocket Forming for a Plurality of Devices

FIG. **5** shows steps of powering a plurality of receiver devices, according to an exemplary embodiment.

In a first step **501**, a transmitter (TX) establishes a connection or otherwise associates with a receiver (RX). That is, in some embodiments, transmitters and receivers may communicate control data over using a wireless communication protocol capable of transmitting information between two processors of electrical devices (e.g., Bluetooth®, BLE, Wi-Fi, NFC, ZigBee®). For example, in embodiments implementing Bluetooth® or Bluetooth® variants, the transmitter may scan for receiver's broadcasting advertisement signals or a receiver may transmit an advertisement signal to the transmitter. The advertisement signal may announce the receiver's presence to the transmitter, and may trigger an association between the transmitter and the receiver. As described later, in some embodiments, the advertisement signal may communicate information that may be used by various devices (e.g., transmitters, client devices, server computers, other receivers) to execute and manage pocket-forming procedures. Information contained within the advertisement signal may include a device identifier (e.g., MAC address, IP address, UUID), the voltage of electrical energy received, client device power consumption, and other types of data related to power transmission waves. The transmitter may use the advertisement signal transmitted to identify the receiver and, in some cases, locate the receiver in a two-dimensional space or in a three-dimensional space. Once the transmitter identifies the receiver, the transmitter may establish the connection associated in the transmitter with the receiver, allowing the transmitter and receiver to communicate control signals over a second channel.

As an example, when a receiver comprising a Bluetooth® processor is powered-up or is brought within a detection range of the transmitter, the Bluetooth processor may begin advertising the receiver according to Bluetooth® standards. The transmitter may recognize the advertisement and begin establishing connection for communicating control signals and power transmission signals. In some embodiments, the advertisement signal may contain unique identifiers so that the transmitter may distinguish that advertisement and ultimately that receiver from all the other Bluetooth® devices nearby within range.

In a next step **503**, when the transmitter detects the advertisement signal, the transmitter may automatically form a communication connection with that receiver, which may allow the transmitter and receiver to communicate control signals and power transmission signals. The transmitter may then command that receiver to begin transmitting real-time sample data or control data. The transmitter may also begin transmitting power transmission signals from antennas of the transmitter's antenna array.

In a next step **505**, the receiver may then measure the voltage, among other metrics related to effectiveness of the power transmission signals, based on the electrical energy received by the receiver's antennas. The receiver may generate control data containing the measured information, and then transmit control signals containing the control data to the transmitter. For example, the receiver may sample the voltage measurements of received electrical energy, for example, at a rate of 100 times per second. The receiver may transmit the voltage sample measurement back to the transmitter, 100 times a second, in the form of control signals.

In a next step **507**, the transmitter may execute one or more software modules monitoring the metrics, such as voltage measurements, received from the receiver. Algorithms may vary production and transmission of power transmission signals by the transmitter's antennas, to maximize the effectiveness of the pockets of energy around the receiver. For example, the transmitter may adjust the phase at which the transmitter's antenna transmit the power transmission signals, until that power received by the receiver indicates an effectively established pocket energy around the receiver. When an optimal configuration for the antennas is identified, memory of the transmitter may store the configurations to keep the transmitter broadcasting at that highest level.

In a next step **509**, algorithms of the transmitter may determine when it is necessary to adjust the power transmission signals and may also vary the configuration of the transmit antennas, in response to determining such adjustments are necessary. For example, the transmitter may determine the power received at a receiver is less than maximal, based on the data received from the receiver. The transmitter may then automatically adjust the phase of the power transmission signals, but may also simultaneously continues to receive and monitor the voltage being reported back from receiver.

In a next step **511**, after a determined period of time for communicating with a particular receiver, the transmitter may scan and/or automatically detect advertisements from other receivers that may be in range of the transmitter. The transmitters may establish a connection to the second receiver responsive to Bluetooth® advertisements from a second receiver.

In a next step **513**, after establishing a second communication connection with the second receiver, the transmitter may proceed to adjust one or more antennas in the transmitter's antenna array. In some embodiments, the transmitter may identify a subset of antennas to service the second receiver, thereby parsing the array into subsets of arrays that are associated with a receiver. In some embodiments, the entire antenna array may service a first receiver for a given period of time, and then the entire array may service the second receiver for that period of time.

Manual or automated processes performed by the transmitter may select a subset of arrays to service the second receiver. In this example, the transmitter's array may be split in half, forming two subsets. As a result, half of the antennas may be configured to transmit power transmission signals to the first receiver, and half of the antennas may be configured for the second receiver. In the current step **513**, the transmitter may apply similar techniques discussed above to configure or optimize the subset of antennas for the second receiver. While selecting a subset of an array for transmitting power transmission signals, the transmitter and second receiver may be communicating control data. As a result, by the time that the transmitter alternates back to communicating with the first receiver and/or scan for new receivers, the transmitter has already received a sufficient amount of sample data to adjust the phases of the waves transmitted by second subset of the transmitter's antenna array, to transmit power transmission waves to the second receiver effectively.

In a next step **515**, after adjusting the second subset to transmit power transmission signals to the second receiver, the transmitter may alternate back to communicating control data with the first receiver, or scanning for additional receivers. The transmitter may reconfigure the antennas of the first subset, and then alternate between the first and second receivers at a predetermined interval.

In a next step **517**, the transmitter may continue to alternate between receivers and scanning for new receivers, at a predetermined interval. As each new receiver is detected, the transmitter may establish a connection and begin transmitting power transmission signals, accordingly.

In one exemplary embodiment, the receiver may be electrically connected to a device like a smart phone. The transmitter's processor would scan for any Bluetooth devices. The receiver may begin advertising that it's a Bluetooth device through the Bluetooth chip. Inside the advertisement, there may be unique identifiers so that the transmitter, when it scanned that advertisement, could distinguish that advertisement and ultimately that receiver from all the other Bluetooth devices nearby within range. When the transmitter detects that advertisement and notices it is a receiver, then the transmitter may immediately form a communication connection with that receiver and command that receiver to begin sending real time sample data.

The receiver would then measure the voltage at its receiving antennas, send that voltage sample measurement back to the transmitter (e.g., 100 times a second). The transmitter may start to vary the configuration of the transmit antennas by adjusting the phase. As the transmitter adjusts the phase, the transmitter monitors the voltage being sent back from the receiver. In some implementations, the higher the voltage, the more energy may be in the pocket. The antenna phases may be altered until the voltage is at the highest level and there is a maximum pocket of energy around the receiver. The transmitter may keep the antennas at the particular phase so the voltage is at the highest level.

The transmitter may vary each individual antenna, one at a time. For example, if there are 32 antennas in the transmitter, and each antenna has 8 phases, the transmitter may begin with the first antenna and would step the first antenna through all 8 phases. The receiver may then send back the power level for each of the 8 phases of the first antenna. The transmitter may then store the highest phase for the first antenna. The transmitter may repeat this process for the second antenna, and step it through 8 phases. The receiver may again send back the power levels from each phase, and the transmitter may store the highest level. Next the transmitter may repeat the process for the third antenna and continue to repeat the process until all 32 antennas have stepped through the 8 phases. At the end of the process, the transmitter may transmit the maximum voltage in the most efficient manner to the receiver.

In another exemplary embodiment, the transmitter may detect a second receiver's advertisement and form a communication connection with the second receiver. When the transmitter forms the communication with the second receiver, the transmitter may aim the original 32 antennas towards the second receiver and repeat the phase process for each of the 32 antennas aimed at the second receiver. Once the process is completed, the second receiver may getting as much power as possible from the transmitter. The transmitter may communicate with the second receiver for a second, and then alternate back to the first receiver for a predetermined period of time (e.g., a second), and the transmitter may continue to alternate back and forth between the first receiver and the second receiver at the predetermined time intervals.

In yet another implementation, the transmitter may detect a second receiver's advertisement and form a communication connection with the second receiver. First, the transmitter may communicate with the first receiver and re-assign half of the exemplary 32 the antennas aimed at the first receiver, dedicating only 16 towards the first receiver. The transmitter may then assign the second half of the antennas to the second receiver, dedicating 16 antennas to the second receiver. The transmitter may adjust the phases for the second half of the antennas. Once the 16 antennas have gone through each of the 8 phases, the second receiver may be obtaining the maximum voltage in the most efficient manner to the receiver.

F. Wireless Power Transmission with Selective Range

1. Constructive Interference

FIG. **6**A and FIG. **6**B show an exemplary system **600** implementing wireless power transmission principles that may be implemented during exemplary pocket-forming processes. A transmitter **601** comprising a plurality of antennas in an antenna array, may adjust the phase and amplitude, among other possible attributes, of power transmission waves **607**, being transmitted from antennas of the transmitter **601**. As shown in FIG. **6**A, in the absence of any phase or amplitude adjustment, power transmission waves **607***a* may be transmitted from each of the antennas will arrive at different locations and have different phases. These differences are often due to the different distances from each antenna element of the transmitter **601***a* to a receiver **605***a* or receivers **605***a*, located at the respective locations.

Continuing with FIG. **6**A, a receiver **605***a* may receive multiple power transmission signals, each comprising power transmission waves **607***a*, from multiple antenna elements of a transmitter **601***a*; the composite of these power transmission signals may be essentially zero, because in this example, the power transmission waves add together destructively. That is, antenna elements of the transmitter **601***a* may transmit the exact same power transmission signal (i.e., comprising power transmission waves **607***a* having the same features, such as phase and amplitude), and as such, when the power transmission waves **607***a* of the respective power transmission signals arrive at the receiver **605***a*, they are offset from each other by 180 degrees. Consequently, the power transmission waves **607***a* of these power transmission signals "cancel" one another. Generally, signals offsetting one another in this way may be referred to as "destructive," and thus result in "destructive interference."

In contrast, as shown in FIG. **6**B, for so-called "constructive interference," signals comprising power transmission waves **607***b* that arrive at the receiver exactly "in phase" with one another, combine to increase the amplitude of the each signal, resulting in a composite that is stronger than each of the constituent signals. In the illustrative example in FIG. **6**A, note that the phase of the power transmission waves **607***a* in the transmit signals are the same at the location of transmission, and then eventually add up destructively at the location of the receiver **605***a*. In contrast, in FIG. **6**B, the phase of the power transmission waves **607***b* of the transmit signals are adjusted at the location of transmission, such that they arrive at the receiver **605***b* in phase alignment, and consequently they add constructively. In this illustrative example, there will be a resulting pocket of energy located around the receiver **605***b* in FIG. **6**B; and there will be a transmission null located around receiver in FIG. **6**A.

FIG. **7** depicts wireless power transmission with selective range **700**, where a transmitter **702** may produce pocket-forming for a plurality of receivers associated with electrical devices **701**. Transmitter **702** may generate pocket-forming through wireless power transmission with selective range **700**, which may include one or more wireless charging radii **704** and one or more radii of a transmission null at a particular physical location **706**. A plurality of electronic devices **701** may be charged or powered in wireless charging radii **704**. Thus, several spots of energy may be created, such spots may be employed for enabling restrictions for powering and charging electronic devices **701**. As an example, the restrictions may include operating specific electronics in a specific or limited spot, contained within wireless charging radii **704**. Furthermore, safety restrictions may be implemented by the use of wireless power transmission with selective range **700**, such safety restrictions may avoid pockets of energy over areas or zones where energy needs to be avoided, such areas may include areas including sensitive equipment to pockets of energy and/or people which do not want pockets of energy over and/or near them. In embodiments such as the one shown in FIG. **7**, the transmitter **702** may comprise antenna elements found on a different plane than the receivers associated with electrical devices **701** in the served area. For example the receivers of electrical devices **701** may be in a room where a transmitter **702** may be mounted on the ceiling. Selective ranges for establishing pockets of energy using power transmission waves, which may be represented as concentric circles by placing an antenna array of the transmitter **702** on the ceiling or other elevated location, and the transmitter **702** may emit power transmission waves that will generate 'cones' of energy pockets. In some embodiments, the transmitter **701** may control the radius of each charging radii **704**, thereby establishing intervals for service area to create pockets of energy that are pointed down to an area at a lower plane, which may adjust the width of the cone through appropriate selection of antenna phase and amplitudes.

FIG. **8** depicts wireless power transmission with selective range **800**, where a transmitter **802** may produce pocket-forming for a plurality of receivers **806**. Transmitter **802** may generate pocket-forming through wireless power transmission with selective range **800**, which may include one or more wireless charging spots **804**. A plurality of electronic devices may be charged or powered in wireless charging spots **804**. Pockets of energy may be generated over a plurality of receivers **806** regardless the obstacles **804** surrounding them. Pockets of energy may be generated by creating constructive interference, according to the principles described herein, in wireless charging spots **804**. Location of pockets of energy may be performed by tacking receivers **806** and by enabling a plurality of communication protocols by a variety of communication systems such as, Bluetooth® technology, infrared communication, Wi-Fi, FM radio, among others.

G. Exemplary System Embodiment Using Heat Maps

FIGS. **9**A and **9**B illustrate a diagram of architecture **900**A, **900**B for a wirelessly charging client computing platform, according to an exemplary embodiment. In some implementations, a user may be inside a room and may hold on his hands an electronic device (e.g. a smartphone, tablet). In some implementations, electronic device may be on furniture inside the room. The electronic device may include a receiver **920**A, **920**B either embedded to the electronic device or as a separate adapter connected to electronic device. Receivers **920**A, **920**B may include all the components described in FIG. **11**. A transmitter **902**A, **902**B may be hanging on one of the walls of the room right behind user. Transmitters **902**A, **902**B may also include all the components described in FIG. **11**.

As user may seem to be obstructing the path between receivers **920**A, **920**B and transmitters **902**A, **902**B, RF waves may not be easily aimed to the receivers **920**A, **920**B in a linear direction. However, since the short signals generated from receivers **920**A, **920**B may be omni-directional for the type of antenna element used, these signals may bounce over the walls **944**A, **944**B until they reach transmitters **902**A, **902**B. A hot spot **944**A, **944**B may be any item in the room which will reflect the RF waves. For example, a large metal clock on the wall may be used to reflect the RF waves to a user's cell phone.

A micro controller in the transmitter adjusts the transmitted signal from each antenna based on the signal received from the receiver. Adjustment may include forming conjugates of the signal phases received from the receivers and further adjustment of transmit antenna phases taking into account the built-in phase of antenna elements. The antenna element may be controlled simultaneously to steer energy in a given direction. The transmitter **902**A, **902**B may scan the room, and look for hot spots **944**A, **944**B. Once calibration is performed, transmitters **902**A, **902**B may focus RF waves in a channel following a path that may be the most efficient paths. Subsequently, RF signals **942**A, **942**B may form a pocket of energy on a first electronic device and another pocket of energy in a second electronic device while avoiding obstacles such as user and furniture.

When scanning the service area, the room in FIGS. **9**A and **9**B, the transmitter **902**A, **902**B may employ different methods. As an illustrative example, but without limiting the possible methods that can be used, the transmitter **902**A, **902**B may detect the phases and magnitudes of the signal coming from the receiver and use those to form the set of transmit phases and magnitudes, for example by calculating conjugates of them and applying them at transmit. As another illustrative example, the transmitter may apply all possible phases of transmit antennas in subsequent transmissions, one at a time, and detect the strength of the pocket of energy formed by each combination by observing information related to the signal from the receiver **920**A, **920**B. Then the transmitter **902**A, **902**B repeats this calibration periodically. In some implementations, the transmitter **902**A, **902**B does not have to search through all possible phases, and can search through a set of phases that are more likely to result in strong pockets of energy based on prior calibration values. In yet another illustrative example, the transmitter **902**A, **902**B may use preset values of transmit phases for the antennas to form pockets of energy directed to different locations in the room. The transmitter may for example scan the physical space in the room from top to bottom and left to right by using preset phase values for antennas in subsequent transmissions. The transmitter **902**A, **902**B then detects the phase values that result in the strongest pocket of energy around the receiver **920***a*, **920***b* by observing the signal from the receiver **920***a*, **920***b*. It should be appreciated that there are other possible methods for scanning a service area for heat mapping that may be employed, without deviating from the scope or spirit of the embodiments described herein. The result of a scan, whichever method is used, is a heat-map of the service area (e.g., room, store) from which the transmitter **902**A, **902**B may identify the hot spots that indicate the best phase and magnitude values to use for transmit antennas in order to maximize the pocket of energy around the receiver.

The transmitters **902**A, **902**B, may use the Bluetooth connection to determine the location of the receivers **920**A, **920**B, and may use different non-overlapping parts of the RF band to channel the RF waves to different receivers **920**A, **920**B. In some implementations, the transmitters **902**A, **902**B, may conduct a scan of the room to determine the location of the receivers **920**A, **920**B and forms pockets of energy that are orthogonal to each other, by virtue of non-overlapping RF transmission bands. Using multiple pockets of energy to direct energy to receivers may inherently be safer than some alternative power transmission methods since no single transmission is very strong, while the aggregate power transmission signal received at the receiver is strong.

H. Exemplary System Embodiment

FIG. **10**A illustrates wireless power transmission using multiple pocket-forming **1000**A that may include one transmitter **1002**A and at least two or more receivers **1020**A. Receivers **1020**A may communicate with transmitters **1002**A, which is further described in FIG. **11**. Once transmitter **1002**A identifies and locates receivers **1020**A, a channel or path can be established by knowing the gain and phases coming from receivers **1020**A. Transmitter **1002**A may start to transmit controlled RF waves **1042**A which may converge in three-dimensional space by using a minimum of two antenna elements. These RF waves **1042**A may be produced using an external power source and a local oscillator chip using a suitable piezoelectric material. RF waves **1042**A may be controlled by RFIC, which may include a proprietary chip for adjusting phase and/or relative magnitudes of RF signals that may serve as inputs for antenna elements to form constructive and destructive interference patterns (pocket-forming). Pocket-forming may take advantage of interference to change the directionality of the antenna elements where constructive interference generates a pocket of energy **1060**A and deconstructive interference generates a transmission null. Receivers **1020**A may then utilize pocket of energy **1060**A produced by pocket-forming for charging or powering an electronic device, for example, a laptop computer **1062**A and a smartphone **1052**A and thus effectively providing wireless power transmission.

Multiple pocket forming **1000**A may be achieved by computing the phase and gain from each antenna of transmitter **1002**A to each receiver **1020**A. The computation may be calculated independently because multiple paths may be generated by antenna element from transmitter **1002**A to antenna element from receivers **1020**A.

I. Exemplary System Embodiment

FIG. **10**B is an exemplary illustration of multiple adaptive pocket-forming **1000**B. In this embodiment, a user may be inside a room and may hold on his hands an electronic device, which in this case may be a tablet **1064**B. In addition, smartphone **1052**B may be on furniture inside the room. Tablet **1064**B and smartphone **1052**B may each include a receiver either embedded to each electronic device or as a separate adapter connected to tablet **1064**B and smartphone **1052**B. Receiver may include all the components described in FIG. **11**. A transmitter **1002**B may be hanging on one of the walls of the room right behind user. Transmitter **1002**B may also include all the components described in FIG. **11**. As user may seem to be obstructing the path between receiver and transmitter **1002**B, RF waves **1042**B may not be easily aimed to each receiver in a line of sight fashion. However, since the short signals generated from receivers may be omni-directional for the type of antenna elements used, these signals may bounce over the walls until they find transmitter **1002**B. Almost instantly, a micro-controller which may reside in transmitter **1002**B, may recalibrate the transmitted signals, based on the received signals sent by each receiver, by adjusting gain and phases and forming a convergence of the power transmission waves such that they add together and strengthen the energy concentrated at that location—in contrast to adding together in a way to subtract from each other and diminish the energy concentrated at that location, which is called "destructive interference" and conjugates of the signal phases received from the receivers and further adjustment of transmit antenna phases taking into account the built-in phase of antenna elements. Once calibration is performed, transmitter **1002**B may focus RF waves following the most efficient paths. Subsequently, a pocket of energy **1060**B may form on tablet **1064**B and another pocket of energy **1060**B in smartphone **1052**B while taking into account obstacles such as user and furniture. The foregoing property may be beneficial in that wireless power transmission using multiple pocket-forming **1000**B may inherently be safe as transmission along each pocket of energy is not very strong, and that RF transmissions generally reflect from living tissue and do not penetrate.

Once transmitter **1002**B identities and locates receiver, a channel or path can be established by knowing the gain and phases coming from receiver. Transmitter **1002**B may start to transmit controlled RF waves **1042**B that may converge in three-dimensional space by using a minimum of two antenna elements. These RF waves **1042**B may be produced using an external power source and a local oscillator chip using a suitable piezoelectric material. RF waves **1042**B may be controlled by RFIC that may include a proprietary chip for adjusting phase and/or relative magnitudes of RF signals, which may serve as inputs for antenna elements to form constructive and destructive interference patterns (pocket-forming). Pocket-forming may take advantage of interference to change the directionality of the antenna elements where constructive interference generates a pocket of energy and deconstructive interference generates a null in a particular physical location. Receiver may then utilize pocket of energy produced by pocket-forming for charging or powering an electronic device, for example a laptop computer and a smartphone and thus effectively providing wireless power transmission.

Multiple pocket-forming **1000**B may be achieved by computing the phase and gain from each antenna of transmitter to each receiver. The computation may be calculated independently because multiple paths may be generated by antenna elements from transmitter to antenna elements from receiver.

An example of the computation for at least two antenna elements may include determining the phase of the signal from the receiver and applying the conjugate of the receive parameters to the antenna elements for transmission.

In some embodiments, two or more receivers may operate at different frequencies to avoid power losses during wireless power transmission. This may be achieved by including an array of multiple embedded antenna elements in transmitter **1002**B. In one embodiment, a single frequency may be transmitted by each antenna in the array. In other embodiments some of the antennas in the array may be used to transmit at a different frequency. For example, ½ of the antennas in the array may operate at 2.4 GHz while the other ½ may operate at 5.8 GHz. In another example, ⅓ of the antennas in the array may operate at 900 MHz, another ⅓ may operate at 2.4 GHz, and the remaining antennas in the array may operate at 5.8 GHz.

In another embodiment, each array of antenna elements may be virtually divided into one or more antenna elements during wireless power transmission, where each set of antenna elements in the array can transmit at a different frequency. For example, an antenna element of the transmitter may transmit power transmission signals at 2.4 GHz, but a corresponding antenna element of a receiver may be configured to receive power transmission signals at 5.8 GHz. In this example, a processor of the transmitter may adjust the antenna element of the transmitter to virtually or logically divide the antenna elements in the array into a plurality patches that may be fed independently. As a result, ¼ of the array of antenna elements may be able to transmit the 5.8 GHz needed for the receiver, while another set of antenna elements may transmit at 2.4 GHz. Therefore, by virtually dividing an array of antenna elements, electronic devices coupled to receivers can continue to receive wireless power transmission. The foregoing may be beneficial because, for example, one set of antenna elements may transmit at about 2.4 GHz and other antenna elements may transmit at 5.8 GHz, and thus, adjusting a number of antenna elements in a given array when working with receivers operating at different frequencies. In this example, the array is divided into equal sets of antenna elements (e.g., four antenna elements), but the array may be divided into sets of different amounts of antenna elements. In an alternative embodiment, each antenna element may alternate between select frequencies.

The efficiency of wireless power transmission as well as the amount of power that can be delivered (using pocket-forming) may be a function of the total number of antenna elements **1006** used in a given receivers and transmitters system. For example, for delivering about one watt at about 15 feet, a receiver may include about 80 antenna elements while a transmitter may include about 256 antenna elements. Another identical wireless power transmission system (about 1 watt at about 15 feet) may include a receiver with about 40 antenna elements, and a transmitter with about 512 antenna elements. Reducing in half the number of antenna elements in a receiver may require doubling the number of antenna elements in a transmitter. In some embodiments, it may be beneficial to put a greater number of antenna elements in transmitters than in a receivers because of cost, because there will be much fewer transmitters than receivers in a system-wide deployment. However, the opposite can be achieved, e.g., by placing more antenna elements on a receiver than on a transmitter as long as there are at least two antenna elements in a transmitter **1002**B.

II. Transmitters—Systems and Methods for Wireless Power Transmissions

Transmitters may be responsible for the pocket-forming, adaptive pocket-forming and multiple pocket-forming using the components described below. Transmitters may transmit wireless power transmission signals to receivers in the form of any physical media capable of propagating through space and being converted into useable electrical energy; examples may include RF waves, infrared, acoustics, electromagnetic fields, and ultrasound. It should be appreciated by those skilled in the art that power transmission signals may be most any radio signal, having any frequency or wavelength. Transmitters are described within with reference to RF transmissions, only as an example, and not to limit the scope to RF transmission only.

Transmitters may be located in number of locations, surfaces, mountings, or embedded structures, such as, desks, tables, floors, walls, and the like. In some cases, transmitters may be located in a client computing platforms, which may be any computing device comprising processors and software modules capable of executing the processes and tasks described herein. Non-limiting examples of client computing platforms may include a desktop computer, a laptop computer, a handheld computer, a tablet computing platform, a netbook, a smartphone, a gaming console, and/or other computing platforms. In other embodiments, the client computing platforms may be a variety of electronic computing devices. In such embodiments, each of the client computing platforms may have distinct operating systems, and/or physical components. The client computing platforms may be executing the same operating system and/or the client computing platforms may be executing different operating systems. The client computing platforms and or devices may be capable of executing multiple operating systems. In addition, box transmitters may contain several arrangements of printed circuit board (PCB) layers, which may be oriented in X, Y, or Z axis, or in any combination of these.

It should be appreciated that wireless charging techniques are not limited to RF wave transmission techniques, but may include alternative or additional techniques for transmitting energy to a receiver converting the transmitted energy to electrical power. Non-limiting exemplary transmission techniques for energy that can be converted by a receiving device into electrical power may include: ultrasound, microwave, resonant and inductive magnetic fields, laser light, infrared, or other forms of electromagnetic energy. In the case of ultrasound, for example, one or more transducer elements may be disposed so as to form a transducer array that transmits ultrasound waves toward a receiving device that receives the ultrasound waves and converts them to electrical power. In the case of resonant or inductive magnetic fields, magnetic fields are created in a transmitter coil and converted by a receiver coil into electrical power.

A. Components of Transmitter Devices

FIG. **11** illustrates a diagram of a system **1100** architecture for wirelessly charging client devices, according to an exemplary embodiment. The system **1100** may comprise a transmitter **1101** and a receiver **1120** that may each comprise an application-specific integrated circuit (ASIC). The transmitter **1101** ASIC may include one or more printed circuit boards (PCB) **1104**, one or more antenna elements **1106**, one or more radio frequency integrated circuits (RFIC) **1108**, one or more microcontrollers (MCs) **1110**, a communication component **1112**, a power source **1114**. The transmitter **1101** may be encased in a housing, which may allocate all the requested components for transmitter **1101**. Components in transmitter **1101** may be manufactured using meta-materials, micro-printing of circuits, nano-materials, and/or any other materials. It should be obvious to someone skilled in the art that the entire transmitter or the entire receiver can be implemented on a single circuit board, as well as having one or more of the functional blocks implemented in separate circuit boards.

1. Printed Circuit Boards

In some implementations, the transmitter **1101** may include a plurality of PCB **1104** layers, which may include antenna element **1106** and/or RFIC **1108** for providing greater control over pocket-forming and may increase response for targeting receivers. The PCB **1104** may mechanically support and electrically connect the electronic component described herein using conductive tracks, pads and/or other features etched from copper sheets laminated onto a non-conductive substrate. PCBs may be single sided (one copper layer), double sided (two copper layers), and/or multi-layer. Multiple PCB **1104** layers may increase the range and the amount of power that could be transferred by

transmitter **1101**. PCB **1104** layers may be connected to a single MC **1110** and/or to dedicated MCs **1110**. Similarly, RFIC **1108** may be connected to antenna element **1106** as depicted in the foregoing embodiments.

In some implementations, a box transmitter, including a plurality of PCB **1104** layers inside it may include antenna element **1108** for providing greater control over pocket-forming and may increase the response for targeting receivers. Furthermore, range of wireless power transmission may be increased by the box transmitter. Multiple PCB **1104** layers may increase the range and the amount of power waves (e.g., RF power waves, ultrasound waves) that could be transferred and/or broadcasted wirelessly by transmitter **1101** due the higher density of antenna element **1106**. The PCB **1104** layers may be connected to a single microcontroller **1110** and/or to dedicated microcontroller **1110** for each antenna element **1106**. Similarly, RFIC **1108** may control antenna element **1101** as depicted in the foregoing embodiments. Furthermore, box shape of transmitter **1101** may increase action ratio of wireless power transmission.

2. Antenna Elements

Antenna element **1106** may be directional and/or omni-directional and include flat antenna elements, patch antenna elements, dipole antenna elements, and any other suitable antenna for wireless power transmission. Suitable antenna types may include, for example, patch antennas with heights from about ⅛ inch to about 6 inches and widths from about ⅛ inch to about 6 inches. The shape and orientation of antenna element **1106** may vary in dependency of the desired features of transmitter **1101**; orientation may be flat in X, Y, and Z axis, as well as various orientation types and combinations in three dimensional arrangements. Antenna element **1106** materials may include any suitable material that may allow RF signal transmission with high efficiency, good heat dissipation and the like. The amount of antenna elements **1106** may vary in relation with the desired range and power transmission capability on transmitter **1101**; the more antenna elements **1106**, the wider range and higher power transmission capability.

Antenna element **1106** may include suitable antenna types for operating in frequency bands such as 900 MHz, 2.5 GHz or 5.8 GHz as these frequency bands conform to Federal Communications Commission (FCC) regulations part **18** (industrial, scientific, and medical equipment). Antenna element **1106** may operate in independent frequencies, allowing a multichannel operation of pocket-forming.

In addition, antenna element **1106** may have at least one polarization or a selection of polarizations. Such polarization may include vertical polarization, horizontal polarization, circularly polarized, left hand polarized, right hand polarized, or a combination of polarizations. The selection of polarizations may vary in dependency of transmitter **1101** characteristics. In addition, antenna element **1106** may be located in various surfaces of transmitter **1101**. Antenna element **1106** may operate in single array, pair array, quad array and any other suitable arrangement that may be designed in accordance with the desired application.

In some implementations, the entire side of the printed circuit board PCB **1104** may be closely packed with antenna element **1106**. The RFIC **1108** may connect to multiple antenna elements **1106**. Multiple antenna elements **1106** may surround a single RFIC **1108**.

3. Radio Frequency Integrated Circuits

The RFIC **1108** may receive an RF signal from the MC **1110**, and split the RF signal into multiple outputs, each output linked to an antenna element **1106**. For example, each RFIC **1108** may be connected to four antenna elements **1106**. In some implementations, each RFIC **1108** may be connected to eight, sixteen, and/or multiple antenna elements **1106**.

The RFIC **1104** may include a plurality of RF circuits that may include digital and/or analog components, such as, amplifiers, capacitors, oscillators, piezoelectric crystals and the like. RFIC **1104** may control features of antenna element **1106**, such as gain and/or phase for pocket-forming and manage it through direction, power level, and the like. The phase and the amplitude of pocket-forming in each antenna element **1106** may be regulated by the corresponding RFIC **1108** in order to generate the desired pocket-forming and transmission null steering. In addition, RFIC **1108** may be connected to MC **1110**, which may utilize digital signal processing (DSP), ARM, PIC-Class microprocessor, central processing unit, computer, and the like. The lower number of RFICs **1108** present in the transmitter **1101** may correspond to desired features such as lower control of multiple pocket-forming, lower levels of granularity, and a less expensive embodiment. In some implementations, RFIC **1108** may be coupled to one or more MCs **1110**, and MC **1110** may be included into an independent base station or into the transmitter **1101**.

In some implementations of transmitter **1101**, the phase and the amplitude of each pocket-forming in each antenna element **1106** may be regulated by the corresponding RFIC **1108** in order to generate the desired pocket-forming and transmission null steering. RFIC **1108** singled coupled to each antenna element **1106** may reduce processing requirement and may increase control over pocket-forming, allowing multiple pocket-forming and a higher granular pocket-forming with less load over MC **1110**, and a higher response of higher number of multiple pocket-forming may be allowed. Furthermore, multiple pocket-forming may charge a higher number of receivers and may allow a better trajectory to such receivers.

RFIC **1108** and antenna element **1106** may operate in any suitable arrangement that may be designed in accordance with the desired application. For example, transmitter **1101** may include antenna element **1106** and RFIC **1108** in a flat arrangement. A subset of 4, 8, 16, and/or any number of antenna elements **1106** may be connected to a single RFIC **1108**. RFIC **1108** may be directly embedded behind each antenna element **1106**; such integration may reduce losses due the shorter distance between components. In some implementations, a row or column of antenna elements **1106** may be connected to a single MC **1110**. RFIC **1108** connected to each row or column may allow a less expensive transmitter **1101** that may produce pocket-forming by changing phase and gain between rows or columns. In some implementations, the RFIC **1108** may output between 2-8 volts of power for the receiver **1120** to obtain.

In some implementations, a cascade arrangement of RFICs **1108** may be implemented. A flat transmitter **1101** using a cascade arrangement of RFICs **1108** may provide greater control over pocket-forming and may increase response for targeting receivers **1106**, as well as a higher reliability and accuracy may be achieved because multiple redundancy of RFICs **1108**.

4. Microcontrollers

The MC **1110** may comprise a processor running ARM and/or DSP. ARM is a family of general purpose microprocessors based on a reduced instruction set computing (RISC). A DSP is a general purpose signal processing chip may provide a mathematical manipulation of an information signal to modify or improve it in some way, and can be characterized by the representation of discrete time, discrete

frequency, and/or other discrete domain signals by a sequence of numbers or symbols and the processing of these signals. DSP may measure, filter, and/or compress continuous real-world analog signals. The first step may be conversion of the signal from an analog to a digital form, by sampling and then digitizing it using an analog-to-digital converter (ADC), which may convert the analog signal into a stream of discrete digital values. The MC **1110** may also run Linux and/or any other operating system. The MC **1110** may also be connected to Wi-Fi in order to provide information through a network **1140**.

MC **1110** may control a variety of features of RFIC **1108** such as, time emission of pocket-forming, direction of the pocket-forming, bounce angle, power intensity and the like. Furthermore, MC **1110** may control multiple pocket-forming over multiple receivers or over a single receiver. Transmitter **1101** may allow distance discrimination of wireless power transmission. In addition, MC **1110** may manage and control communication protocols and signals by controlling communication component **1112**. MC **1110** may process information received by communication component **1112** that may send and receive signals to and from a receiver in order to track it and concentrate radio frequency signals **1142** (i.e., pockets of energy) on it. Other information may be transmitted from and to receiver **1120**; such information may include authentication protocols among others through a network **1140**.

The MC **1110** may communicate with the communication component **1112** through serial peripheral interface (SPI) and/or inter-integrated circuit (I^2C) protocol. SPI communication may be used for short distance, single master communication, for example in embedded systems, sensors, and SD cards. Devices communicate in master/slave mode where the master device initiates the data frame. Multiple slave devices are allowed with individual slave select lines. I^2C is a multi-master, multi-slave, single-ended, serial computer bus used for attaching low-speed peripherals to computer motherboards and embedded systems

5. Communications Component

Communication component **1112** may include and combine Bluetooth technology, infrared communication, Wi-Fi, FM radio among others. MC **1110** may determine optimum times and locations for pocket-forming, including the most efficient trajectory to transmit pocket forming in order to reduce losses because obstacles. Such trajectory may include direct pocket-forming, bouncing, and distance discrimination of pocket-forming. In some implementations, the communication component **1112** may communicate with a plurality of devices, which may include receivers **1120**, client devices, or other transmitters **1101**.

6. Power Source

Transmitters **1101** may be fed by a power source **1114** that may include AC or DC power supply. Voltage, power, and current intensity provided by power source **1114** may vary in dependency with the required power to be transmitted. Conversion of power to radio signal may be managed by MC **1110** and carried out by RFIC **1108** that may utilize a plurality of methods and components to produce radio signals in a wide variety of frequencies, wavelength, intensities, and other features. As an exemplary use of a variety of methods and components for radio signal generation, oscillators and piezoelectric crystals may be used to create and change radio frequencies in different antenna elements **1106**. In addition, a variety of filters may be used for smoothing signals as well as amplifiers for increasing power to be transmitted.

Transmitter **1101** may emit RF power waves that are pocket-forming with a power capability from few watts to a predetermined number of watts required by a particular chargeable electronic device. Each antenna may manage a certain power capacity. Such power capacity may be related with the application

7. Housing

In addition to a housing, an independent base station may include MC **1110** and power source **1114**, thus, several transmitters **1101** may be managed by a single base station and a single MC **1110**. Such capability may allow the location of transmitters **1101** in a variety of strategic positions, such as ceilings, decorations, walls, and the like. Antenna elements **1106**, RFIC **1108**, MC **1110**, communication component **1112**, and power source **1114** may be connected in a plurality of arrangements and combinations, which may depend on the desired characteristics of transmitter **1101**.

III. Receivers—Systems and Methods for Receiving and Utilizing Wireless Power Transmissions

A. Components of Receiver Devices

Returning to FIG. **11**, which illustrates a diagram of a system **1100** architecture for wirelessly charging client devices, according to an exemplary embodiment, the system **1100** may comprise transmitter **1101** and receivers **1120** that may each comprise an application-specific integrated circuit (ASIC). The ASIC of the receivers **1120** may include a printed circuit board **1122**, an antenna element **1124**, a rectifier **1126**, a power converter **1129**, a communications component **1130**, and/or a power management integrated circuit (PMIC) **1132**. Receivers **1120** may also comprise a housing that may allocate all the requested components. The various components of receivers **1120** may comprise, or may be manufactured using, meta-materials, micro-printing of circuits, nano-materials, and the like.

1. Antenna Elements

Antenna elements **1124** may include suitable antenna types for operating in frequency bands similar to the bands described for antenna elements **1106** of a transmitter **1101**. Antenna element **1124** may include vertical or horizontal polarization, right hand or left hand polarization, elliptical polarization, or other suitable polarizations as well as suitable polarization combinations. Using multiple polarizations can be beneficial in devices where there may not be a preferred orientation during usage or whose orientation may vary continuously through time, for example a smartphone or portable gaming system. On the contrary, for devices with well-defined orientations, for example a two-handed video game controller, there might be a preferred polarization for antennas, which may dictate a ratio for the number of antennas of a given polarization. Suitable antenna types may include patch antennas with heights from about 118 inch to about 6 inches and widths from about ⅛ inch to about 6 inches. Patch antennas may have the advantage that polarization may depend on connectivity, i.e., depending on which side the patch is fed, the polarization may change. This may further prove advantageous as a receiver, such as receiver **1120**, may dynamically modify its antenna polarization to optimize wireless power transmission. Different antenna, rectifier, or power converter arrangements are possible for a receiver, as is described in the embodiments herein.

2. Rectifiers

A rectifier **1126** may convert alternating current (AC), which periodically reverses direction, to direct current (DC), which takes non-negative values. Because of the alternating nature of the input AC sine wave, the process of rectification

alone produces a DC current that, though non-negative, consists of pulses of current. The output of the rectifier may be smoothed by an electronic filter to produce a steady current. The rectifier **1126** may include diodes and/or resistors, inductors and/or capacitors to rectify the alternating current (AC) voltage generated by antenna element **1124** to direct current (DC) voltage.

In some implementations, the rectifier **1126** may be a full-wave rectifier. A full-wave rectifier may convert the whole of the input waveform to one of constant polarity (positive or negative) at its output. Full-wave rectification may convert both polarities of the input waveform to pulsating DC (direct current), and yield a higher average output voltage. Two diodes and a center tapped transformer and/or four diodes in a bridge configuration and any AC source (including a transformer without center tap) may be utilized for a full-wave rectifier. For single-phase AC, if the transformer is center-tapped, then two diodes back-to-back (cathode-to-cathode or anode-to-anode, depending upon output polarity required) may be utilized to form a full-wave rectifier. Twice as many turns may be required on the transformer secondary to obtain the same output voltage than for a bridge rectifier, but the power rating is unchanged. Rectifier **1126** may be placed as close as is technically possible to antenna element **1124** to minimize losses. After rectifying AC voltage, DC voltage may be regulated using power converter **1129**.

3. Power Converters

Power converter **1129** can be a DC-to-DC converter that may help provide a constant voltage output and/or to help boost the voltage to the receiver **1120**. In some implementations, the DC-to-DC converter may be a maximum power point tracker (MPPT). A MPPT is an electronic DC-to-DC converter that converts a higher voltage DC output down to the lower voltage needed to charge batteries. Typical voltage outputs can be from about 5 volts to about 10 volts. In some embodiments, power converter **1129** may include electronic switched mode DC-to-DC converters, which can provide high efficiency. In such a case, a capacitor may be included before power converter **1129** to ensure sufficient current is provided for the switching device to operate. When charging an electronic device, for example a phone or laptop computer, initial high-currents that can exceed the minimum level of power needed to activate the operation of an electronic switched mode DC-to-DC converter, may be required. In such a case, a capacitor may be added at the output of receiver **1120** to provide the extra energy required. Afterwards, lower power can be provided, as required to provide the appropriate amount electric current; for example, 1/80 of the total initial power used while having the phone or laptop still building-up charge.

In one embodiment, multiple rectifiers **1126** can be connected in parallel to antenna element **1124**. For example, four rectifiers **1126** may be connected in parallel to antenna element **1124**. However, several more rectifiers **1126** can be used. This arrangement may be advantageous because each rectifier **1126** may only need to handle ¼ of the total power. If one watt is to be delivered to an electronic device, then each rectifier **1126** may only need to handle a quarter of a watt. The arrangement may greatly diminish cost because using a plurality of low-power rectifiers **1126** can be cheaper than utilizing one high-power rectifier **1126** while handling the same amount of power. In some embodiments, the total power handled by rectifier **1126** can be combined into a power converter **1129**. In other embodiments, there may a power converter **1129** per each rectifier **1126**.

In other embodiments, multiple antenna elements **1124** may be connected in parallel to a rectifier **1126**, after which DC voltage may be regulated through a power converter **1129**. In this example, four antenna elements **1124** may be connected in parallel to a single rectifier **1126**. This arrangement may be advantageous because each antenna element **1124** may only handle ¼ of the total power. In addition, the arrangement may enable usage of antenna element **1124** of different polarizations with a single rectifier **1126** because signals may not cancel each other. Because of the foregoing property, the arrangement may be suitable for electronic client devices with an orientation that is not well-defined or otherwise varies over time. Lastly, the arrangement may be beneficial when using antenna element **1124** of equal polarization and configured for phases that do not differ greatly. In some embodiments, however, there can be a rectifier **1126** per antenna element **1124** and/or multiple rectifiers **1126** per antenna element **1124**.

In an exemplary implementation, an arrangement where multiple antenna elements **1124** outputs can be combined and connected to parallel rectifiers **1126** whose output may further be combined in one power converter **1129** may be implemented. There may be 16 antenna elements **1124** whose output may be combined at four parallel rectifiers **1126**. In other embodiments, antenna elements **1124** may be subdivided into groups (of four for example) and may connect to independent rectifiers **1126**.

In yet another embodiment, an arrangement where groups of antenna elements **1124** may be connected to different rectifiers **1126** which may in turn also be connected to different power converters **1129** may be implemented. In this embodiment, four groups of antenna elements **1124** (each containing four antenna elements **1124** in parallel) may each connect independently to four rectifiers **1126**. In this embodiment, the output of each rectifier **1126** may connect directly to a power converter **1129** (four in total). In other embodiments, the output of all four rectifiers **1126** can be combined before each power converter **1129** to handle the total power in parallel. In some embodiments, the combined outputs of each rectifier **1126** may connect to a single power converter **1129**. This arrangement may be beneficial in that it allows great proximity between rectifier **1126** and antenna element **1124**. This property may be desirable as it may keep losses at a minimum.

4. Communications Component

A communications component **1130**, similar to that of transmitter **1101**, may be included in receiver **1120** to communicate with a transmitter or to other electronic equipment. In some implementations, receiver **1120** can use a built-in communications component of the device (for example, Bluetooth) for communicating to a given transmitter **1120** based on requirements provided by processor such as battery level, user predefined charging profile or others transmitters **1101** may include one or more printed circuit boards (PCB) **1104**, one or more antenna elements **1106**, one or more radio frequency integrated circuits (RFIC) **1108**, one or more microcontrollers (MCs) **1110**, a communication component **1112**, and a power source **1114**. The transmitter **1101** may be encased in a housing, which may allocate all the requested components for transmitter **1101**. Components in transmitter **1101** may be manufactured using meta-materials, micro-printing of circuits, nano-materials, and/or any other materials. The types of information communicated by the communications components between the receiver and the transmitter include but not limited to the present power levels in the batteries, signal strength and power level being received at the receiver, timing informa-

tion, phase and gain information, user identification, client device privileges, security related signaling, emergency signaling, and authentication exchanges, among other things.

5. PMICs

A power management integrated circuit (PMIC) **1132** is an integrated circuit and/or a system block in a system-on-a-chip device for managing power requirements of the host system. The PMIC **1132** may include battery management, voltage regulation, and charging functions. It may include a DC-to-DC converter to allow dynamic voltage scaling. In some implementations, the PMIC **1132** may provide up to a 95% power conversion efficiency. In some implementations, the PMIC **1132** may integrate with dynamic frequency scaling in a combination. The PMIC **1132** may be implemented in a battery-operated device such as mobile phones and/or portable media players. In some implementations, the battery may be replaced with an input capacitor and an output capacitor. The PMIC **1132** may be directly connected to the battery and/or capacitors. When the battery is being charged directly, a capacitor may not be implemented. In some implementations, the PMIC **1132** may be coiled around the battery. The PMIC **1132** may comprise a power management chip (PMC) that acts as a battery charger, and is connected to the battery. The PMIC **1132** can use pulse-frequency modulation (PFM) and pulse-width modulation (PWM). It can use switching amplifier (Class-D electronic amplifier). In some implementations, an output converter, a rectifier, and/or a BLE may also be included in the PMIC **1132**.

6. Housing

Housing can be made of any suitable material that may allow for signal or wave transmission and/or reception, for example plastic or hard rubber. Housing may be an external hardware that may be added to different electronic equipment, for example in the form of cases, or can be embedded within electronic equipment as well.

7. Network

The network **1140** may comprise any common communication architecture that facilitates communication between transmitter **1101** and the receiver **1120**. One having ordinary skill in the art would appreciate that the network **1140** may be the Internet, a private intranet, or some hybrid of the two. It should also be obvious to one skilled in the art that the network components may be implemented in dedicated processing equipment, or alternatively in a cloud processing network.

IV. Hardware and IC Configurations

A. Hybrid Charging Method

FIG. **12** illustrates an electronic device **1200**, such as a smartphone or wearable portable computing device, comprising an embedded receiver **1202**; the embedded receiver **1202** may comprise a backup battery **1210** and may be associated with a subset of antenna elements **1204** configured for converting energy in pockets of energy, into alternating current (AC) voltage, a rectifier **1206** configured to convert AC voltage to direct current (DC) voltage, and a power converter **1208** for providing constant DC voltage output to either a backup battery **1210** or to power supply **1218**.

A backup battery **1210** may be an additional source of energy for electronic device **1200**, and may be any battery capable of providing enough voltage to power or charge electronic device **1200**. The backup battery **1210** may be coupled to a power converter **1212** to deliver DC voltage to a power **1218** Backup battery **1210** may be charged while embedded receiver **1202** is capturing pockets of energy from the transmitter to which is connected. In other embodiments, power converter **1208** may pass DC voltage directly to power supply **1218** without charging backup battery **1210**. In yet another embodiment power converter **1208** may pass DC voltage to both power supply **1218** and backup battery **1210** at the same time. Power supply **1218** may constantly provide DC voltage to micro-controller **1216** and communications device **1214**, as long as the power supply **1218** does not deplete the electrical charge or power from embedded receiver **1202**.

FIG. **13** illustrates two embodiments where wireless power transmission **1300** may or may not occur. In FIG. **13**, a user **1302** may be inside a room and may hold on his hands an electronic device, which in this case, may be a tablet **1304**. The tablet **1304** may include a receiver (not shown), which may either be embedded within the table **1304** or may be coupled to the table **1304** as a separate adapter. In some embodiments, the receiver embedded or otherwise coupled to the table **1304** may comprise a backup battery (not shown) included with the receiver, and may be fully or partially charged during wireless power transmission. A transmitter **1306** may transmit controlled power transmission waves **1308** to converge in space to form a pocket of energy **1310** at the location of the embedded receiver (i.e., table **1304**). The receiver may either power tablet **1304** directly or charge the backup battery first, and then power tablet **1304**. The tablet **1304** may have an extra source of power (backup battery) included as an internal part of the receiver. The backup battery may be charged while the transmitter **1306** is available, so that the tablet **1304** may then use the available power from the backup battery in the event a transmitter **1306** is no longer available.

B. Improved Battery Life of Portable Electronic Devices

FIG. **14** illustrates an electronic device **1400** comprising an embedded receiver **1402**, which may integrated into the electronic device **1400** or otherwise detachably coupled within the electronic device **1400**. The electronic device **1400** may further comprise a capacitor that may store electrical energy and serve the function of an auxiliary power supply **1404**, which may improve the period of time the electronic device **1400** may be used, particularly after a power supply **1406** is depleted.

An embedded receiver **1402** may comprise one or more antenna elements **1408** capable of receiving power transmission waves from a pocket of energy and converting energy caused by the power transmission waves into AC voltage. The embedded receiver **1402** may further comprise a rectifier circuit **1410** configured to convert the AC voltage into direct current (DC) voltage, and a power converter **1412** configured to provide a constant DC voltage output to the capacitor serving as the auxiliary power supply **1404**. Although in the exemplary system **1400** embodiment, the auxiliary power supply **1404** may be a capacitor, it should be appreciated that the auxiliary power supply **1401** may be any combination of one or more electrical circuits capable of receiving, storing, and supplying a charge on behalf of the electronic device **1400**; for example, the auxiliary power supply **1404** may be a battery. Capacitors, however, may be easily and cheaply be manufactured in small sizes, which may be beneficial for many wearable devices. The auxiliary power supply **1404** may fully or partially power the electronic device **1400**, and thus the auxiliary power supply **1404** may fully or partially decrease the power demands placed on a power supply **1406** by the electronic device **1400**.

In some embodiments, an embedded receiver **1402** in the electronic device **1400** may use a communications device **1414** also embedded within the electronic device **1400** to

communicate with a transmitter and/or other electronic devices. In some embodiments, the electronic device **1400** may not include an communications device **1414**, and thus the embedded receiver **1402** may comprise a communications component (not shown). In some embodiments, the electronic device **1400** may comprise a micro-controller **1416** circuit that not only control the intended functions of the electronic device **1400**, but the micro-controller may also manage power loads on auxiliary power supply **1404** and/or power supply **1406**. In other embodiments, the micro-controller **1416** may be embedded within the embedded receiver **1402**. The foregoing configuration may be beneficial when implementing receivers on electronic devices that may not include a micro-controller **1416**, for example, an ordinary analog wristwatch.

FIG. **15** illustrates implementation of a wireless power transmission system **1500** in which an individual user **1502** may be wearing a Bluetooth-enabled headset **1504**, and wireless power transmissions may be powering the headset **1504**, through pocket-forming established by transmitter **1506**. The headset **1504** may include an embedded receiver (not shown) for utilizing pockets of energy **1508** to power a capacitor (not shown) embedded within the headset **1504**. In some embodiments, such as the exemplary system **1500**, the embedded receiver may utilize a native Bluetooth chip (not shown) of the headset **1504** for communicating wirelessly with the transmitter **1506**. The headset **1504** may use a native, embedded micro-controller to manage power loads being generated between the capacitor and the native power supply of the headset **1504**. In some implementations, the transmitter **1506** may be located within a house or on other such buildings where the individual **1502** may be frequently located, thereby providing convenient charging to the headset **1504**. In other embodiments, the transmitter **1506** may be placed inside a car belonging to the individual **1502** to power the headset **1504** while driving.

FIG. **16** illustrates wireless power transmission **1600** where an individual user **1602** may be wearing a typical digital wristwatch **1604**, which may powered by power transmission waves from pockets of energy established by a transmitter **1606**. The wristwatch **1604** may include an embedded receiver (not shown) for utilizing pockets of energy **1608** to provide power (i.e., electrical charge) to a capacitor (not shown) embedded within the wristwatch **1604**. However, typical wristwatches, such as wristwatch **1604**, may not include a Bluetooth chip or a micro-controller, in which case, the embedded receiver may include an optional communications device and an embedded micro-controller. In this embodiment, communications device can be a Bluetooth chip.

FIG. **17** illustrates an logical execution of method **1700** implemented by a controller of a receiver or electronic device. The exemplary method **1700** may be used for managing power loads on auxiliary power supply, which may be in the form of a capacitor and/or a power supply in the form of battery. The method **1700** may begin at a verify power step **1702** where a micro-controller may determine whether power is being delivered to an embedded receiver of the electronic device.

After verifying power step **1702**, the micro-controller may continue to a power decision step **1704** where the micro-controller may determine whether to proceed to a deep sleep mode step **1706** or to proceed to a deep sleep mode decision step **1708**; the determination may be based on a power delivery status. That is, if power is not being delivered, the micro-controller may proceed to deep sleep mode step **1706** where power saving may be prioritized. On the other hand, if the power is being delivered, the micro-controller may proceed to a deep sleep mode decision step **1708**, where the micro-controller may determine whether the electronic device is in deep sleep mode. If the electronic device is in deep sleep mode, then the micro-controller may proceed to a turn deep sleep mode off step **1710**, where deep sleep mode may be turned off. After determining a determination of sleep mode status, the micro-controller may proceed to a capacitor charge decision step **1712**. However, if the electronic device is not in deep sleep mode, the micro-controller may proceed directly to capacitor charge decision step **1712**.

At capacitor charge decision step **1712**, the micro-controller determines whether to proceed to an operate on capacitor step **1714**, or proceed to an operate on battery step **1716**. If auxiliary power supply, in the form of a capacitor, is fully charged, then the micro-controller may proceed to operate on capacitor step **1714** in which a capacitor may provide power to the electronic device. On the other hand, if the auxiliary power supply, in the form of a capacitor, is not fully charged, then the micro-controller may proceed to operate on battery step **1716** where the power supply, in the form of a battery, may provide power to the electronic device.

Referring back to the operate on capacitor step **1714**, in some cases a sub-routine may be added where the micro-controller may ordinarily proceed to a voltage verification step **1718**. In voltage verification step **1718**, the micro-controller may continuously or on predefined time intervals, verify the voltage across the auxiliary power supply to detect and prevent the electronic device from turning off. If the voltage level across the auxiliary power supply is not sufficient for powering the electronic device, the micro-controller may proceed to operate on battery step **1716**. Otherwise, the micro-controller may remain at the operate on capacitor step **1714**. In many circumstances, where micro-controller reaches an operate on battery step **1716**, the method **1700** may begin, again, to verify power delivery status and minimize the power load on the power supply. In addition, when on deep sleep mode step **1706**, the micro-controller may proceed to a capacitor charge determination step **1712**, in which the micro-controller may decide whether to operate on deep sleep mode and whether to draw energy from power supply or auxiliary power supply.

In other embodiments of the method **1700**, the micro-controller **1716** may decide to power the electronic device using the power supply and auxiliary power supply simultaneously. This option may be beneficial when the power load on the electronic device is too large for a capacitor to handle alone. However, such a configuration may still diminish the power load on the power supply. In other embodiments, a plurality of capacitors can be used as an auxiliary power supply to compensate for power surges or high power demands.

C. Enhanced Receiver for Wireless Power Transmission

FIG. **18** shows a block diagram of receiver **1800** which can be used for wireless powering or charging one or more electronic devices as exemplified in wireless power transmission. According to some aspects of this embodiment, receiver **1800** may operate with the variable power source generated from transmitted power transmission waves to deliver constant and stable power or energy to the electronic device. In addition, receiver **1800** may use the variable power source generated from the power transmission waves to charge electronic components within receiver for proper operation.

Receiver **1800** may be integrated into an electronic device and may include a housing (not shown) that can be made of any material allowing for communications signal or power transmission waves to be transmitted/received. Non-limiting example may include plastic or hard rubber. The housing may be an external hardware that may be added to different electronic equipment, for example in the form of cases, or can be embedded within electronic equipment as well.

Receiver **1800** may include an antenna array **1802** which may convert power transmission waves that have converged into a pocket of energy, into electrical power. Antenna array **1802** may include one or more antenna elements **1804** communicatively coupled to one or more rectifiers **1806**. Power transmission waves produced by a transmitter may exhibit a sinusoidal shape within a voltage amplitude and power range that may depend on characteristics of transmitter and the environment of transmission. The environment of transmission may be affected by changes to or movement of objects within the physical boundaries; or the movement of the boundaries. The environment may be also affected by changes to the medium of transmission; for example, changes to air temperature or humidity. As a result, the voltage or power generated by antenna array **1802** at the receiver may vary. In some embodiments, the alternating current (AC) voltage or power generated by antenna element **1804** from transmitted power transmission waves that converge into a pocket of energy and may vary from about 0 volts or 0 watts, to about 5 volts at 3 watts.

Antenna element **1804** may include suitable antenna types for operating in frequency bands associated with the receivers or transmitters. Antenna element **1804** may include vertical or horizontal polarization, right hand or left hand polarization, elliptical polarization, or other suitable polarizations as well as suitable polarization combinations. Using multiple polarizations can be beneficial in devices where there may not be a preferred orientation during usage or whose orientation may vary continuously through time, for example electronic device. Instead, for devices with well-defined orientations, for example a two-handed video game controller, there might be a preferred polarization for antennas which may dictate a ratio for the number of antennas of a given polarization. Suitable antenna types may include patch antennas with heights from about ⅛ inches to about 6 inches and widths from about ⅛ inches to about 6 inches. Patch antennas may have the advantage that polarization may depend on connectivity, i.e. depending on which side the patch is fed, the polarization may change. This may further prove advantageous as receiver **1800** may dynamically modify its antenna polarization to optimize wireless power transmission.

Rectifier **1806** may include diodes or resistors, inductors or capacitors to rectify the AC voltage generated by antenna element **1804** to direct current (DC) voltage. Rectifier **1806** may be placed as close as is technically possible to antenna element **1804** to minimize losses. In one embodiment, rectifier **306** may operate in synchronous mode, in which case rectifier **1806** may include switching elements that may improve the efficiency of rectification. As an illustrative embodiment, and not by way of limitation, output of rectifier **1806** may vary from about 0 volts to about 5 volts.

An input boost converter **1808** can be included in receiver **1800** to convert the variable DC output voltage of rectifier **1806** into a more stable DC voltage that can be used by components of receiver **1800** and/or electronic device. Input boost converter **1808** may operate as a step-up DC-to-DC converter to increase the voltage from rectifier **1806** to a voltage level suitable for proper operation of receiver **1800**. As an illustrative embodiment, and not by way of limitation, input boost converter **1808** may operate with input voltages of at least 0.4 volts to about 5 volts to produce an output voltage of about 5 volts. In addition, input boost converter **1808** may reduce or eliminate rail-to-rail deviations. In one embodiment, input boost converter **1808** may exhibit a synchronous topology to increase power conversion efficiency.

An amount of power or voltage produced from converting power transmission waves establishing a pocket of energy may range from roughly zero to about 5 volts. A receiver **1800** may include a storage element **1810** to store energy or electric charge from the output voltage produced by input boost converter **1808**. In this way, storage element **1810**, through an output boost converter **1816**, may deliver continuous voltage or power to a load **1812**, where this load **1812** may represent the battery or internal circuitry of electronic device requiring continuous powering or charging. For example, a load **1812** may be placed onto a battery of a mobile phone requiring constant delivery of 5 volts at 2.5 watts.

Storage element **1810** may include a battery **1814** to store power or electric charge from the voltage received from input boost converter **1808**. Battery **1814** may be of different types, including but not limited to, alkaline, nickel-cadmium (NiCd), nickel-metal hydride (NiHM), and lithium-ion, among others. Battery **1814** may exhibit shapes and dimensions suitable for fitting receiver **1800**, while charging capacity and cell design of battery **1814** may depend on load **1812** requirements. For example, for charging or powering a mobile phone, a battery **1814** may deliver a voltage from about 3 volts to about 4.2 volts.

In another embodiment, storage element **1810** may include a capacitor (not shown) instead of a battery **1814** for storing and delivering electrical charge as required by the receiver. As a way of example, in the case of charging or powering a mobile phone, receiver **1800** may comprise a capacitor with operational parameters capable of matching load **1812** requirements.

Receiver **1800** may also include output boost converter **1816** operatively coupled with storage element **1810** and input boost converter **1808**, where this output boost converter **1816** may be used for matching impedance and power requirements of load **1812**. As an illustrative embodiment, and not by way of limitation, output boost converter **1816** may increase the output voltage of the battery **1814**, from about 3 or 4.2 volts to about 5 volts which may be the voltage required by the battery or internal circuitry of electronic device. Similarly, to input boost converter **1808**, output boost converter **1816** may be based on a synchronous topology for enhancing power conversion efficiency.

A storage element **1810** may provide power or voltage to a communication subsystem **1818** which may include a low-dropout regulator (LDO **1820**), a microcontroller **1822**, and an electrically erasable programmable read-only memory (EEPROM **1824**). LDO **1820** may function as a DC linear voltage regulator to provide a steady voltage suitable for low energy applications as in microcontroller **1822**. Microcontroller **1822** may be operatively coupled with EEPROM **1824** to store data pertaining the operation and monitoring of receiver **1800**. Microcontroller **1822** may also include a clock (CLK) input and general purpose inputs/outputs (GPIOs).

In one embodiment, a microcontroller **1822** in conjunction with EEPROM **1824** may run an algorithm for controlling the operation of input and output boost converters **1808**, **1816** according to load **1812** requirements. Microcontroller

1822 may actively monitor the overall operation of receiver 1800 by taking one or more power measurements 1826 (ADC) at different nodes or sections. For example, microcontroller 1822 may measure how much voltage or power is being delivered to the rectifier 1806, input boost converter 1808, battery 1814, output boost converter 1816, communication subsystem 1818, and/or load 1812. The microcontroller 1822 may communicate power measurements 1826 to the load 1812 so that the electronic device may determine an amount of much power to pull from the receiver 1800. In another embodiment, microcontroller 1822, based on power measurements 1826, may control the power or voltage delivered at load 1812 by adjusting the load current limits at output boost converter 1816. In some embodiments, a maximum power point tracking (MPPT) algorithm may be executed by microcontroller 1822 to control and optimize the amount of power that input boost converter 1808 can pull from antenna array 1802. In another embodiment, microcontroller 1822 may regulate how power or energy can be drained from storage element 1810 based on the monitoring of power measurements 1826. For example, if the power or voltage received at the input boost converter 1808 is determined to be too low (i.e., below a threshold), then the microcontroller 1822 may direct output boost converter 1816 to drain a battery 1814 for powering the load 1812.

Receiver 1800 may include a switch 1828 configured for resuming or interrupting power being delivered at the load 1812. In one embodiment, microcontroller 1822 may control the operation of switch 1828 according to terms of services contracted by one or more users of wireless power transmission or according to administrator policies.

FIG. 19 shows an exemplary power conversion process 1900 that may be implemented in a receiver during wireless power transmission. According to some aspects of this embodiment, power conversion process 1900 may allow energy harvesting from power transmission waves from pockets of energy, which may provide voltage or power to internal components of a receiver, which may be embedded in an electronic device.

Power conversion process 1900 may start when antenna element may convert power transmission waves and/or pockets of energy into AC voltage or power. At step 1902, rectifier may rectify this AC voltage or power into DC voltage or power. The DC voltage or power generated at rectifier may be variable depending on conditions for extracting power from power transmission waves in a pocket of energy.

Subsequently at step 1904, input boost converter may step up the DC voltage or power obtained from rectifier to a voltage or power level that may be used by storage element or other internal components of receiver. In one embodiment, input boost converter may receive an input, which may be based on a MPPT algorithm, from microcontroller for adjusting and optimizing the amount of power that can be pulled from antenna array. The stabilized and increased voltage at input boost converter may be directly utilized by load, but it may not be continuous at all times given the inherently characteristics of power transmission waves.

The stabilized DC voltage produced by input boost converter may be used to charge storage element, where storage element may be in the form of a battery or a capacitor, at step 1906. Storage element may maintain suitable charging levels at all times for delivering continuous power to load. In addition, storage element may provide suitable power or voltage to communication subsystem.

The voltage or power generated by storage element can be step up by output boost converter to match impedance and power requirements of load, at step 1908. In one embodiment, microcontroller may set up current limits at output boost converter to adjust the amount of power being delivered at load according to the application.

After a second boost conversion, output boost converter may now supply stable and continuous power or voltage to load within suitable electrical specifications for charging or powering electronic device, which may be operatively coupled with receiver, at step 1910.

In some embodiments, a microcontroller may control switch to interrupt or resume the delivery of power or voltage at load, according to terms of services contracted by users of wireless power transmission service. For example, if wireless power transmission is a service provided to a user of receiver, then microcontroller, through the use of switch, can interrupt or resume the powering or charging of electronic device according to the status of user's contract. Furthermore, microcontroller may regulate the operation of switch based on charging or powering priorities established for one or more electronic devices. For example, microcontroller may open switch if the electronic device coupled with receiver has a lower powering or charging priority compared to another electronic device coupled with a suitable receiver that may require charging and that may have a higher priority for charging. In this case, transmitter may direct power transmission waves towards the receiver coupled with the electronic device, with higher charging and powering priority.

D. Methods and Systems for MPPT in Receivers

FIG. 20 illustrates a graph 2000, depicting intensity (I) of electrical current available from an antenna array of a receiver, the power (P) available from the antenna array, and voltage (V) available from the antenna array. FIG. 20 shows a current-to-voltage curve 2002 that may be obtained from a receiver operation and which may vary according to the characteristics of a receiver. FIG. 20 also shows a corresponding power curve 2004, which may represent the power available (i.e., amount of voltage) from the antenna array.

In one embodiment, voltage levels measured at ADC node point may not necessarily exhibit a linear relationship with the available current from the main antenna array. Thus, power curve 2004 may have multiple local peaks, including a global power maximum 2006 at P1, and a local power maximum 2008 at P2.

The MPPT algorithm running in the input boost converter may continuously track for a global power maximum 2006 in graph 2000, so that input boost converter may be able to extract the maximum amount of power from antenna array. However, in some circumstances, the MPPT algorithm may be stuck at a local power maximum 2008 which may not correspond to the global power maximum 2006 in graph 2000. When operating at a local power maximum 2008, intelligent input boost converter may not be able to maximize the amount of power that can be extracted from antenna array. In some embodiments, the MPPT algorithm may be automatically or manually adjusted to control operation of intelligent input boost converter so that the boost converter can continuously operate at global power maximum 2006, to make optimal use of the power that can be extracted by the antenna array of the receiver.

FIG. 21 shows execution steps of an exemplary MPPT management method 2100 that may be used by a power transmission system for maximizing the amount of power that can be extracted from antenna array to deliver continuous and suitable power to receiver.

At monitoring step 2102, the built-in micro-controller in the intelligent input boost converter 1808 may monitor

voltage from antenna array and search for a global power maximum **2006** or local power maximum.

At step **2104**, the main system micro-controller may read the result from the input boost converter or use ADC node point to establish the input boost converter current operational MPPT. Subsequently, at step **2106**, the main system micro-controller may read the voltage of dedicated antenna element at ADC node point. At step **2108**, the combination of the input boost converter MPPT, and the output value of the dedicated antenna element may be used to either index a predefined look-up table or be used in an algorithm. The outcome may or may not require an adjustment of the operational input parameters for the input boost converter MPPT algorithm. Once an action is determined, the main system micro-controller may adjust the MPPT algorithm executed by input boost converter, thus moving the operation of input boost converter from local power maximum to global power maximum, at step **2110**.

A set of predefined MPPT tables may include a characterization of a plurality of receivers in terms of each receiver's respective ability to extract power from a pocket of energy. For example, the capability of a receiver for extracting power from power transmission waves may vary according to the configuration of antenna array of that receiver. In one embodiment, the MPPT tables may be determined by laboratory measurements of different receivers in a way that a particular receiver may be mapped to an optimal MPPT. In one embodiment, main system micro-controller may use the information contained in the MPPT tables to provide initial conditions for running an optimal MPPT algorithm, at the intelligent input boost converter based on the specific characteristics or configuration of the receiver.

V. Wearable Device

FIG. **22** shows a schematic representation of a wearable device **2200**, which may be a type of computing device comprising a receiver, as described above. A wearable **2200** may be an article of clothing (e.g., shirt, hat, pants, shoes) or other personal accessory (e.g., jewelry, belt, book bag, wristband, watch, anklet) of a user, and may comprise a computing processor **2201**, payload hardware **2203**, a battery **2205**, and a communication component, which in FIG. **22** is a Bluetooth® low-energy antenna and processor (BLE) **2207**. The wearable **2200** may further comprise memory **2209** for storing the computer's programming and payload application data.

A computing processor **2201** of the wearable **2200** may be integrated circuitry capable of performing power and payload functionality for the wearable **2200**. The wearable **2201** may communicate payload application data with a smart device **2213** to provide the user with the desired functionality, for which the wearable **2200** was designed. For example, if the wearable **2200** is a heart rate monitor, then the payload application executed by the smart device **2213** may be a software application that provides features such as heart rate tracking, dietary data, exercise data, among other heart health information and features. In this example, the payload application data may be heart rate measurements observed by the wearable **2200**. The smart device **2213** may be any computing device comprising a processor capable of executing the payload application and that is capable of communicating payload application instructions and data over a wireless protocol, such as Bluetooth®, NFC, BLE, RFID, Wi-Fi, and the like. Non-limiting examples of the smart device **2213** may include a smartphone, laptop, or other computing device.

Payload hardware **2203** may be circuitry of the wearable **2200** capable of executing various processes and tasks in accordance with the features of the payload application and functional purpose of the wearable **2200**. Returning to the example in which the wearable **2200** is a heart rate monitor, which may be worn on a user's wrist: in this example, the payload hardware **2203** may comprise components capable of measuring the user's heart rate and blood pressure. The processor **2201** of the wearable **2200** may receive the measurements from the payload hardware **2203** and then produce payload application data from the measurements. Although the examples of a wearable **2200** describe a heart rate monitor, it should be appreciated that the wearable **2200** may be any device that is worn by the user and provides various computing features (e.g., smart watches, smart glasses). As such, a wearable **2200** may comprise payload hardware **2203** rendering the wearable **2200** capable of the intended functionality.

In some embodiments, the wearable **2200** may comprise a battery **2205** capable of holding an electrical charge. The battery **2205** may power the computing processor **2201** and the payload hardware **2203**. In some embodiments, the battery **2205** of the wearable **2200** may receive the electrical charge from the communications component **2207**, which may comprise a receiver configured to harvest energy from pockets of energy produced by transmitters **2211**. In some embodiments, the wearable **2200** may forego a battery **2205** and may be powered entirely by electrical energy harvested by a receiver of the communications component **2207**.

A communications component **2207** may be circuitry of the wearable **2200** that may communicate control signals **2221** with a transmitter **2211** data using one or more wireless communications protocols (e.g., Bluetooth, BLE, Wi-Fi, NFC, RFID). The communications component **2207** may communicate payload application data over a second communication channel **2223** with a smart device **2213** executing a payload application associated with the functionality of the wearable **2200**. The wearable **2200** may communicate control signals **2221** with a transmitter **2211** concurrently to communicating the payload application data to the smart device **2213** over the second communication channel **2223**. In some embodiments, the wearable **2200** may communicate simultaneously with both the transmitter **2211** and the smart device **2213**. In such embodiments, the communications component **2207** and the processor **2201** may be capable of receiving and processing the respective communications signals simultaneously. In some embodiments, the wearable **2200** may alternate communications between the transmitter **2211** and the smart device **2213**. In such embodiments, the processor **2201** and communications component **2207** may communicate with each device for a predetermined period of time.

Control signals **2221** may contain control data produced by the processor **2201** and communications component **2207** of the wearable **2200**, which the transmitter **2211** may use to adjust power transmission waves that the transmitter **2211** emits to generate pockets of energy. The control data of the control signals **2221** may contain, for example, data indicating the location of the wearable relative to the transmitter **2211**, and data indicating the amount of power that the wearable **2200** has effectively harvested from a pocket of energy generated by the transmitter **2211**. In some cases, the control signals **2221** may include an advertisement signal for establishing a first communication between the transmitter **2211** and the communications component **2207** of the wearable **2200**.

Payload application data collected by the payload hardware **2203** may be transmitted to the smart device **2213**, over a second communication channel **2223**. The second com-

munication channel **2223** hosting the payload application data may implement any wireless communication protocol capable of transmitting the payload application data from the wearable to the smart device **2213**. In some embodiments, the communications component **2207** may transmit the payload application data at a given interval. In some embodiments, the payload application data may be transmitted at the moment the wearable **2200** and the smart device **2213** are brought into communicative proximity; in such embodiments, the second communication channel **2223** may be automatically established, and the smart device **2213** and wearable **2200** may then automatically exchange payload application data collected by the payload hardware **2203** of the wearable **2200**.

In some embodiments, the wearable **2200** may comprise memory **2209**, which may be a non-transitory machine-readable storage media that is capable of storing binary data. In some cases, the memory **2209** may store programming associated with the payload application that may be executed by the processor **2201** and/or the payload hardware **2203**. When the processor **2201** executes the programming stored in the memory **2209**, the payload hardware **2203** may collect measurements and perform various tasks intended to provide the intended functionality of the wearable **2200** and the associated payload application. In some cases, the memory **2209** may store control data that may inform transmitters **2211** of an optimal waveform and direction for transmitting power transmission waves to establish pockets of energy. In such cases, the wearable **2200** may transmit the control data for the transmitters **2211** to determine how the power transmission waves should be produced and transmitted. The processor **2201** may continuously update the memory **2209** with control data representing more effective ways for the transmitters **2211** to produce and transmit power control waves.

A smart device **2213** may be any computing device comprising a processor that executes a payload application associated with the wearable **2200**, a communication component that communicates payload application data and instructions with the wearable **2200** over a second communications channel **2223**. In some embodiments, communication between wearable and smart device **2213** may be through Bluetooth Low Energy (BLE), Wi-Fi, or other wireless communication protocol. Application payload data may be include wearable **2200** status or usage reports, or payload application data generated by the wearable **2200**. As an example, for embodiments in which the wearable **2200** is a heart rate monitor, the payload application data may include heart rate measurements or physical exertion data.

A transmitter **2211** may be any device that emits power transmission waves that establish a pocket of energy, which may be harvested by receivers and converted to electric energy. The transmitter **2211** may transmit power transmission waves to a wireless power receiver, which may be a component of the communications component **2207** of the wearable **2200** shown in FIG. **22**. In some embodiments, the wearable **2200** may communicate an advertisement signal to establish a first communication channel, which hosts control data **2221**. After establishing the first communication channel hosting control data **2221**, the transmitter **2211** may then begin communicating control data **2221** with the wearable **2200**, to manage delivery of electrical energy to the battery **2205** of the wearable **2200**. In some embodiments, the wearable **2200** may use the same or a different communication channel to upload application payload data to the transmitter **2211**, which the transmitter **2211** may upload to a server of a computing service associated with the transmitters **2211**. Control data may include wearable **2200** device status and usage reports.

The foregoing method descriptions and the process flow diagrams are provided merely as illustrative examples and are not intended to require or imply that the steps of the various embodiments must be performed in the order presented. As will be appreciated by one of skill in the art the steps in the foregoing embodiments may be performed in any order. Words such as "then," "next," and the like, are not intended to limit the order of the steps; these words are simply used to guide the reader through the description of the methods. Although process flow diagrams may describe the operations as a sequential process, many of the operations can be performed in parallel or concurrently. In addition, the order of the operations may be re-arranged. A process may correspond to a method, a function, a procedure, a subroutine, a subprogram, etc. When a process corresponds to a function, its termination may correspond to a return of the function to the calling function or the main function.

The various illustrative logical blocks, modules, circuits, and algorithm steps described in connection with the embodiments disclosed herein may be implemented as electronic hardware, computer software, or combinations of both. To clearly illustrate this interchangeability of hardware and software, various illustrative components, blocks, modules, circuits, and steps have been described above generally in terms of their functionality. Whether such functionality is implemented as hardware or software depends upon the particular application and design constraints imposed on the overall system. Skilled artisans may implement the described functionality in varying ways for each particular application, but such implementation decisions should not be interpreted as causing a departure from the scope of the present invention.

Embodiments implemented in computer software may be implemented in software, firmware, middleware, microcode, hardware description languages, or any combination thereof. A code segment or machine-executable instructions may represent a procedure, a function, a subprogram, a program, a routine, a subroutine, a module, a software package, a class, or any combination of instructions, data structures, or program statements. A code segment may be coupled to another code segment or a hardware circuit by passing and/or receiving information, data, arguments, parameters, or memory contents. Information, arguments, parameters, data, etc. may be passed, forwarded, or transmitted via any suitable means including memory sharing, message passing, token passing, network transmission, etc.

The actual software code or specialized control hardware used to implement these systems and methods is not limiting of the invention. Thus, the operation and behavior of the systems and methods were described without reference to the specific software code being understood that software and control hardware can be designed to implement the systems and methods based on the description herein.

When implemented in software, the functions may be stored as one or more instructions or code on a non-transitory computer-readable or processor-readable storage medium. The steps of a method or algorithm disclosed herein may be embodied in a processor-executable software module that may reside on a computer-readable or processor-readable storage medium. A non-transitory computer-readable or processor-readable media includes both computer storage media and tangible storage media that facilitate transfer of a computer program from one place to another. A non-transitory processor-readable storage media may be any

available media that may be accessed by a computer. By way of example, and not limitation, such non-transitory processor-readable media may comprise RAM, ROM, EEPROM, CD-ROM or other optical disk storage, magnetic disk storage or other magnetic storage devices, or any other tangible storage medium that may be used to store desired program code in the form of instructions or data structures and that may be accessed by a computer or processor. Disk and disc, as used herein, include compact disc (CD), laser disc, optical disc, digital versatile disc (DVD), floppy disk, and Blu-ray disc where disks usually reproduce data magnetically, while discs reproduce data optically with lasers. Combinations of the above should also be included within the scope of computer-readable media. Additionally, the operations of a method or algorithm may reside as one or any combination or set of codes and/or instructions on a non-transitory processor-readable medium and/or computer-readable medium, which may be incorporated into a computer program product.

The preceding description of the disclosed embodiments is provided to enable any person skilled in the art to make or use the present invention. Various modifications to these embodiments will be readily apparent to those skilled in the art, and the generic principles defined herein may be applied to other embodiments without departing from the spirit or scope of the invention. Thus, the present invention is not intended to be limited to the embodiments shown herein but is to be accorded the widest scope consistent with the following claims and the principles and novel features disclosed herein.

While various aspects and embodiments have been disclosed, other aspects and embodiments are contemplated. The various aspects and embodiments disclosed are for purposes of illustration and are not intended to be limiting, with the true scope and spirit being indicated by the following claims.

What is claimed is:

1. A wireless power charging system, the system comprising:

a transmitter configured to transmit power waves into a transmission field of the transmitter; and

a wearable device, wherein the wearable device comprises:

one or more antennas configured to transmit data and to receive energy from the power waves in a pocket of energy, wherein the one or more antennas provide the received energy to a receiver for extracting usable power;

a payload hardware configured to capture one or more measurements in accordance with a payload application of the wearable device, the one or more measurements corresponding to physiologic data of a user of the wearable device;

a memory configured to:

store information indicating a maximum power level that the receiver is able to extract from power waves; and

store the physiologic data; and

the receiver in electrical communication with the one or more antennas, the receiver comprising a processor configured to:

measure a power level of the extracted energy;

determine whether the power level of the extracted energy is less than the maximum power level that the receiver is able to extract; and

cause the one or more antennas to transmit:

to the transmitter, data indicating that the receiver requires higher level power waves upon determining that the power level of the extracted energy is less than the maximum power level, and

to some electronic device distinct from the transmitter, the physiologic data.

2. The wireless power charging system of claim **1**, wherein the receiver comprises a boost converter and the processor is configured to adjust operation of the boost converter to maximize an amount of usable power extracted from the power waves.

3. The wireless power charging system of claim **2**, wherein the processor is configured to execute a maximum power point tracking (MPPT) algorithm to adjust the operation of the boost converter.

4. The wireless power charging system of claim **1**, wherein the transmitter is further configured to transmit one or more higher level power waves into the transmission field upon receiving the data indicating that the receiver requires higher level power waves.

5. The wireless power charging system of claim **4**, wherein the receiver is further configured to extract energy from the one or more higher level power waves in a pocket of energy.

6. The wireless power charging system of claim **1**, wherein:

the wearable device further comprises a battery; and

the receiver is configured to convert the extracted energy into usable power that powers the wearable device or charges the battery.

7. The wireless power charging system of claim **1**, wherein the one or more antennas are further configured to transmit, to the transmitter, data indicating a location of the wearable device.

8. The wireless power charging system of claim **1**, wherein the one or more antennas are further configured to transmit, to the transmitter, data indicating an amount of power used by the wearable device.

9. The wireless power charging system of claim **1**, wherein the electronic device that is distinct from the transmitter comprises a processor configured to execute an application associated with the wearable device.

10. The system of claim **1**, wherein the one or more measurements corresponding to physiologic data of the user of the wearable device include measurements of the user's heart rate.

11. The system of claim **1**, wherein the one or more measurements corresponding to physiologic data of the user of the wearable device include measurements of the user's blood pressure.

12. A method of wireless power charging comprising:

transmitting, by a transmitter, power waves into a transmission field of the transmitter; and

at a wearable device comprising:

one or more antennas configured to transmit data and to receive energy from the power waves in a pocket of energy;

a memory;

a payload hardware configured to capture one or more measurements in accordance with a payload application of the wearable device, the one or more measurements corresponding to physiologic data of a user of the wearable device; and

a receiver in electrical communication with the one or more antennas, wherein the receiver comprises a

processor that is configured to execute instructions, the instructions including:

receiving, by the one or more antennas, energy from the power waves in a pocket of energy, wherein the one or more antennas provide the received energy to a receiver for extracting usable power;

storing, by the memory, information indicating a maximum power level that the receiver is able to extract from power waves; and

storing the physiologic data; and

measuring, by the processor, a power level of the extracted energy;

determining, by the processor, whether the power level of the extracted energy is less than the maximum power level that the receiver is able to extract; and

causing, by the processor, the one or more antennas to transmit;

to the transmitter, data indicating that the receiver requires higher level power waves upon determining that the power level of the extracted energy is less than the maximum power level, and

to some electronic device distinct from the transmitter, the physiologic data.

13. The method of claim **12**, wherein:

the receiver comprises a boost converter; and

the method further comprises adjusting, by the processor, operation of the boost converter to maximize an amount of usable power extracted from the power waves.

14. The method of claim **13**, further comprising executing, by the processor, a maximum power point tracking (MPPT) algorithm to adjust the operation of the boost converter.

15. The method of claim **12**, further comprising transmitting, by the transmitter, one or more higher level power waves into the transmission field upon receiving the data indicating that the receiver requires higher level power waves.

16. The method of claim **15**, further comprising extracting, by the receiver, energy from the one or more higher level power waves in a pocket of energy.

17. The method of claim **12**, wherein:

the wearable device further comprises a battery; and

the method further comprises converting, by the receiver, the extracted energy into usable power that powers the wearable device or charges the battery.

18. The method of claim **12**, further comprising transmitting to the transmitter, by the one or more antennas, data indicating a location of the wearable device.

19. The method of claim **12**, further comprising transmitting to the transmitter, by the one or more antennas, data indicating an amount of power used by the wearable device.

20. The method of claim **12**, further comprising:

storing, by the memory, biometric data detected by the wearable device; and

transmitting to a smart device that is distinct from the transmitter, by the one or more antennas, the biometric data detected by the wearable device.

21. The method of claim **20**, wherein the smart device comprises a processor configured to execute an application associated with the wearable device.

22. The method of claim **12**, wherein the one or more measurements corresponding to physiologic data of the user of the wearable device include measurements of the user's heart rate.

23. The method of claim **12**, wherein the one or more measurements corresponding to physiologic data of the user of the wearable device include measurements of the user's blood pressure.

* * * * *