US 20190173421A1

(19) United States

(12) Patent Application Publication

Loewenstern et al.

(10) Pub. No.: US 2019/0173421 A1

(43) Pub. Date: Jun. 6, 2019

(54) **SAFETY SWITCH FOR PHOTOVOLTAIC SYSTEMS**

(71) Applicant: **Solaredge Technologies, Ltd.**, Herzeliya (IL)

(72) Inventors: **Yakir Loewenstern**, Ariel (IL); **Ilan Yoscovich**, Ramat Gan (IL); **David Braginsky**, Ashdod (IL); **Tzachi Glovinsky**, Petah Tikva (IL); **Izak Assia**, Shoham (IL)

(21) Appl. No.: **16/248,475**

(22) Filed: **Jan. 15, 2019**

Related U.S. Application Data

(63) Continuation-in-part of application No. 15/250,068, filed on Aug. 29, 2016, now Pat. No. 10,230,310.

(60) Provisional application No. 62/341,147, filed on May 25, 2016, provisional application No. 62/318,303, filed on Apr. 5, 2016.

Publication Classification

(51) **Int. Cl.**

H02S 40/34	(2006.01)
H02H 9/02	(2006.01)
H02H 7/20	(2006.01)
H02M 3/145	(2006.01)
H02M 7/48	(2006.01)
H02S 40/36	(2006.01)
H02S 50/10	(2006.01)

(52) **U.S. Cl.**

CPC ***H02S 40/34*** (2014.12); ***H02H 9/02*** (2013.01); ***H02H 7/20*** (2013.01); *H02H 3/08* (2013.01); ***H02M 7/48*** (2013.01); ***H02S 40/36*** (2014.12); ***H02S 50/10*** (2014.12); ***H02M 3/145*** (2013.01)

(57) **ABSTRACT**

Various implementations described herein are directed to a methods and apparatuses for disconnecting, by a device, elements at certain parts of an electrical system. The method may include measuring operational parameters at certain locations within the system and/or receiving messages from control devices indicating a potentially unsafe condition, disconnecting and/or short-circuiting system elements in response, and reconnection the system elements when it is safe to do so. Certain embodiments relate to methods and apparatuses for providing operational power to safety switches during different modes of system operation.

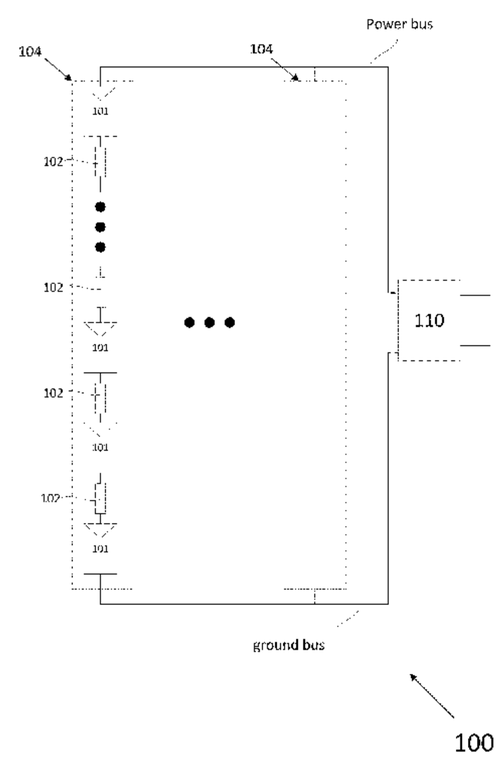

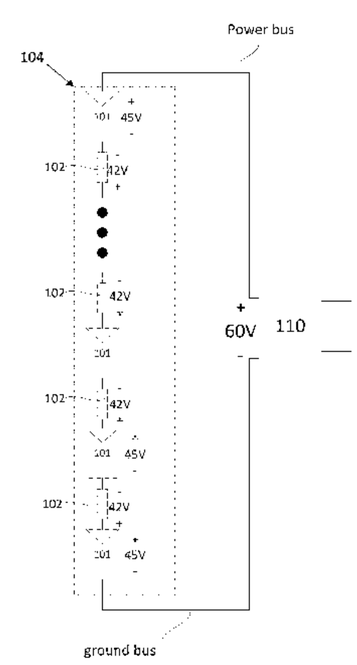

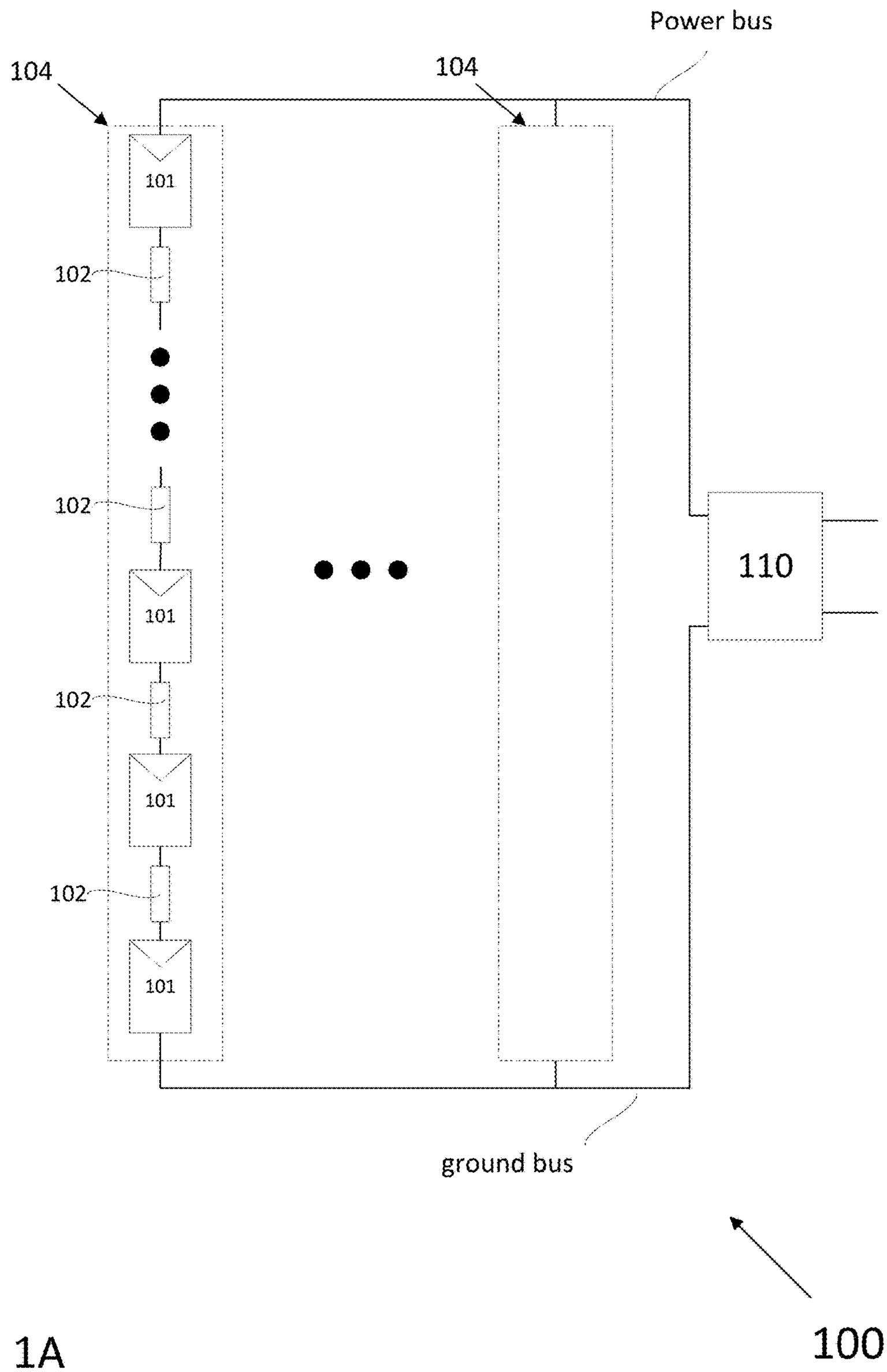
Power bus
104
104
101
102
102
101
102
101
102
101
110
ground bus
100

Fig. 1A

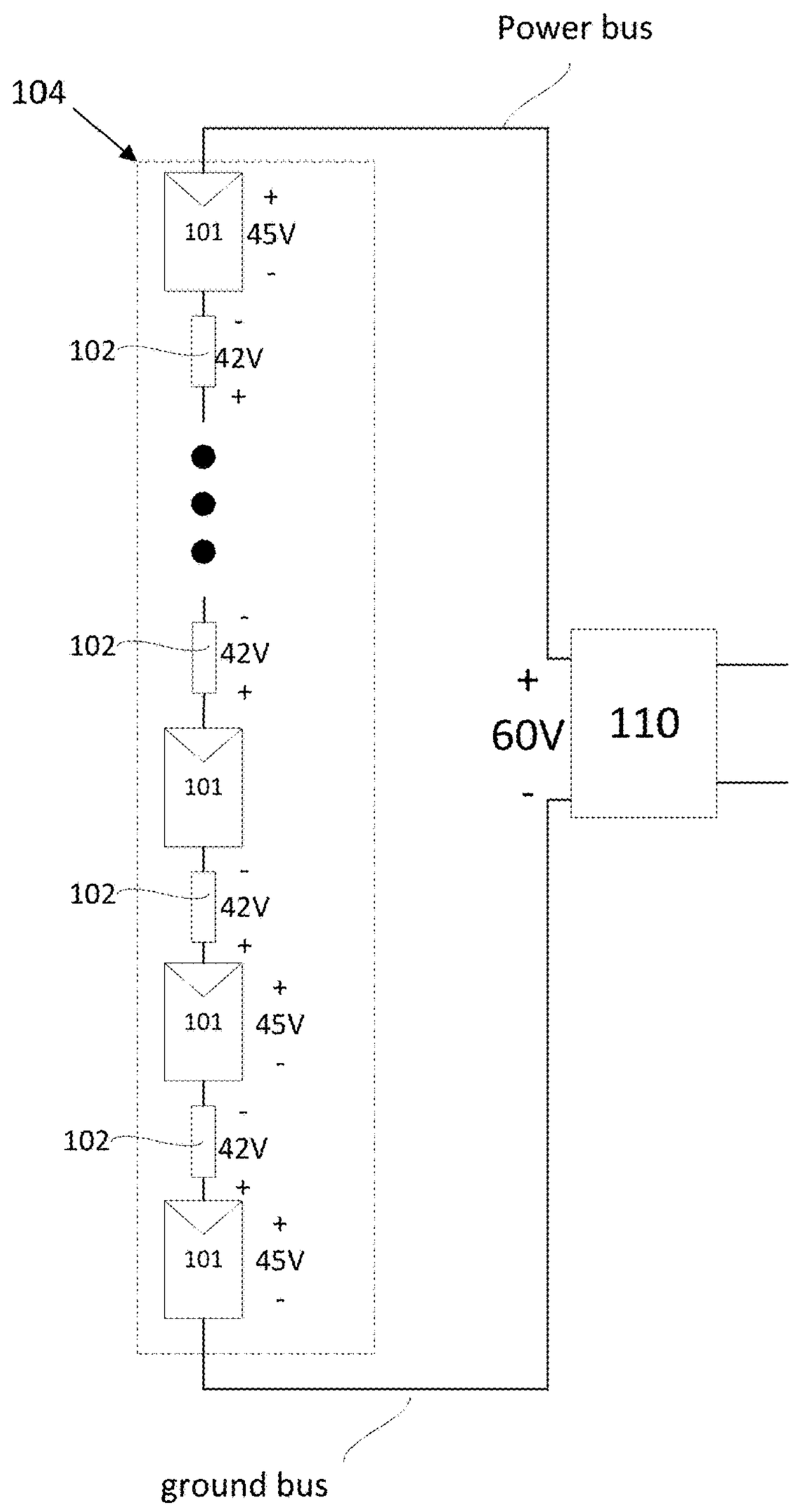
Power bus
104
101
+
45V
-
102
42V
102
42V
101
102
42V
101
+
45V
-
102
42V
101
+
45V
-
+
60V
-
110
ground bus

Fig. 1B

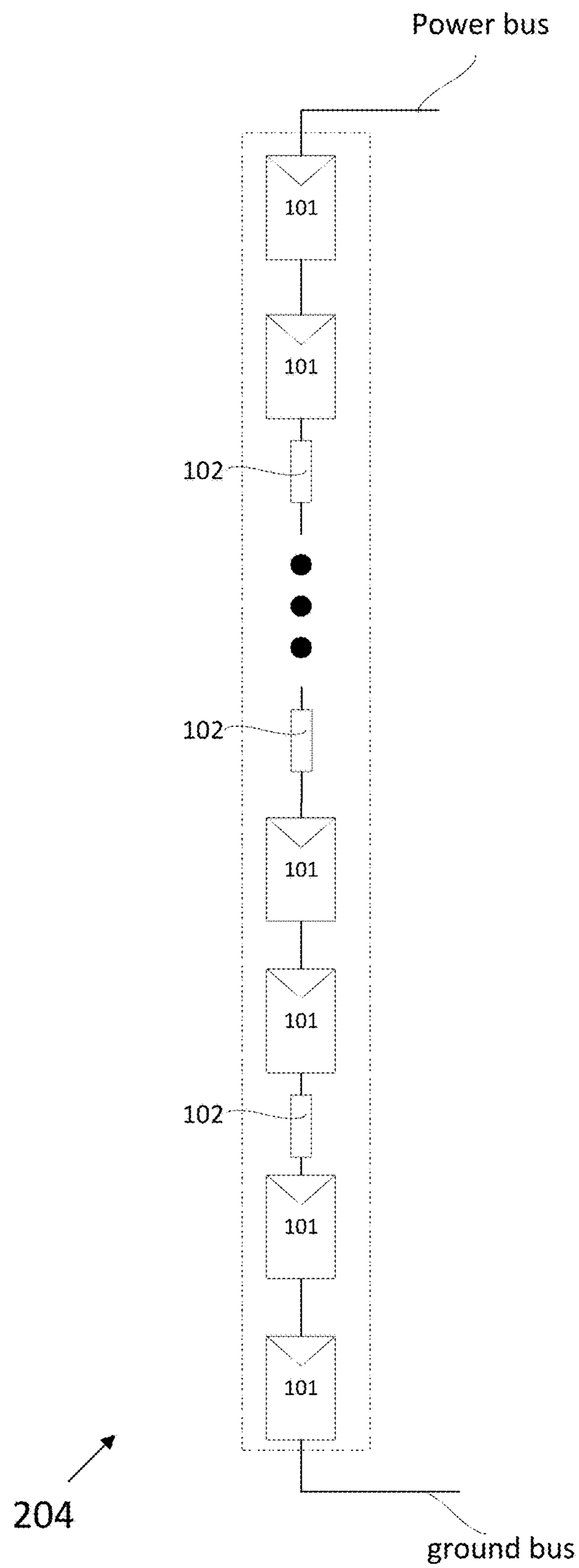

Fig. 2

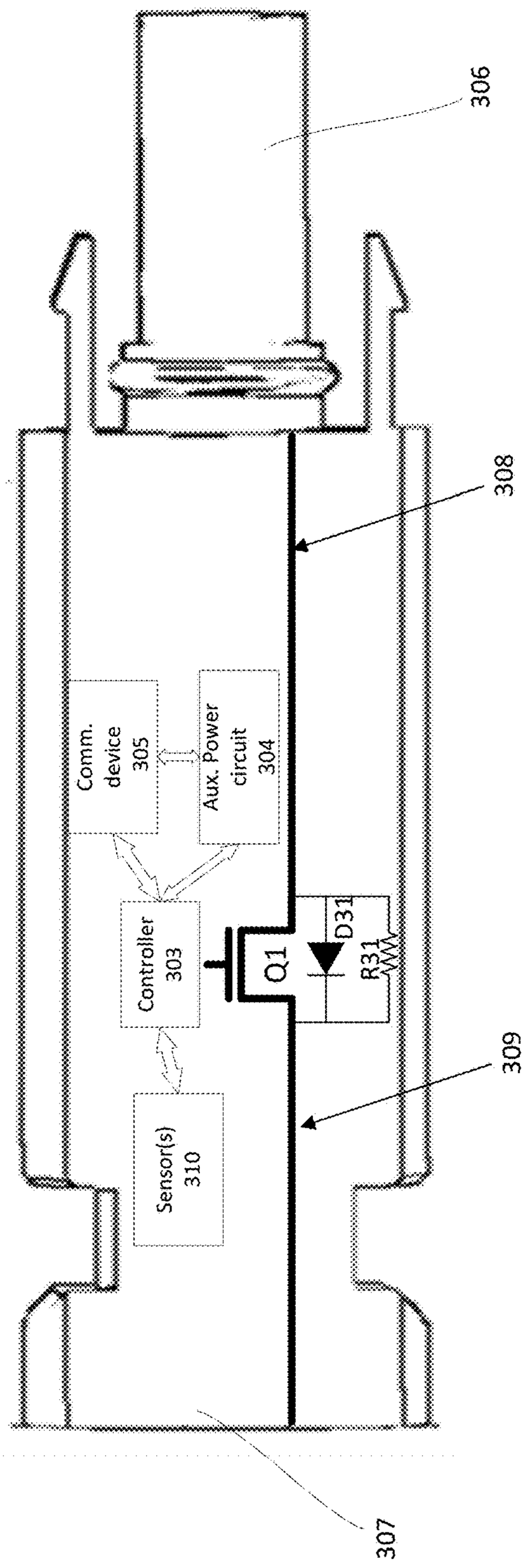
306
302
308
Comm. device 305
Aux. Power circuit 304
Controller 303
Q1
D31
R31
309
Sensor(s) 310
307

Fig. 3

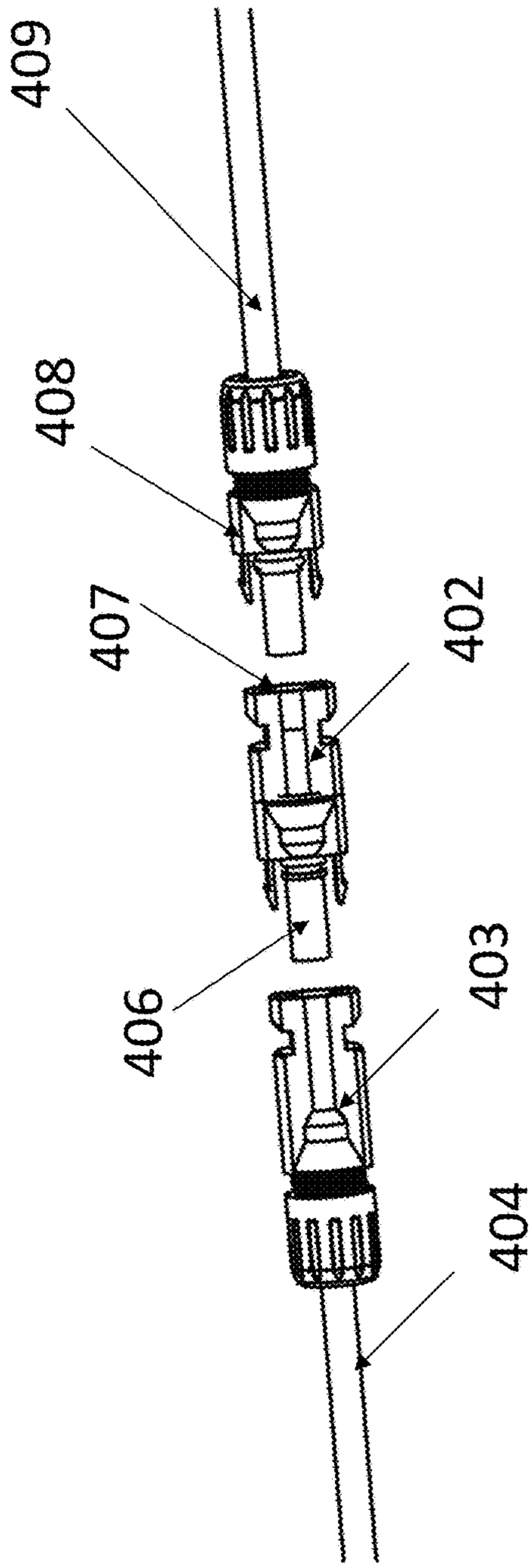

Fig. 4A

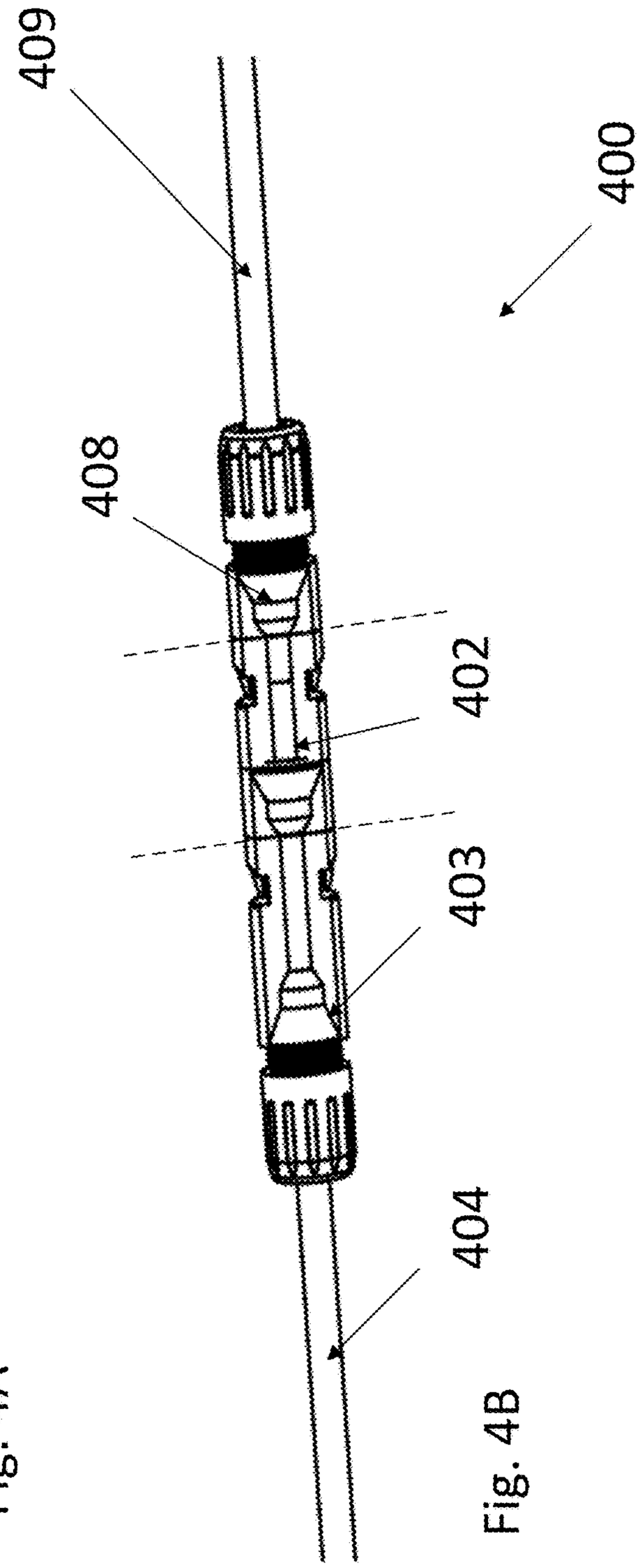

Fig. 4B

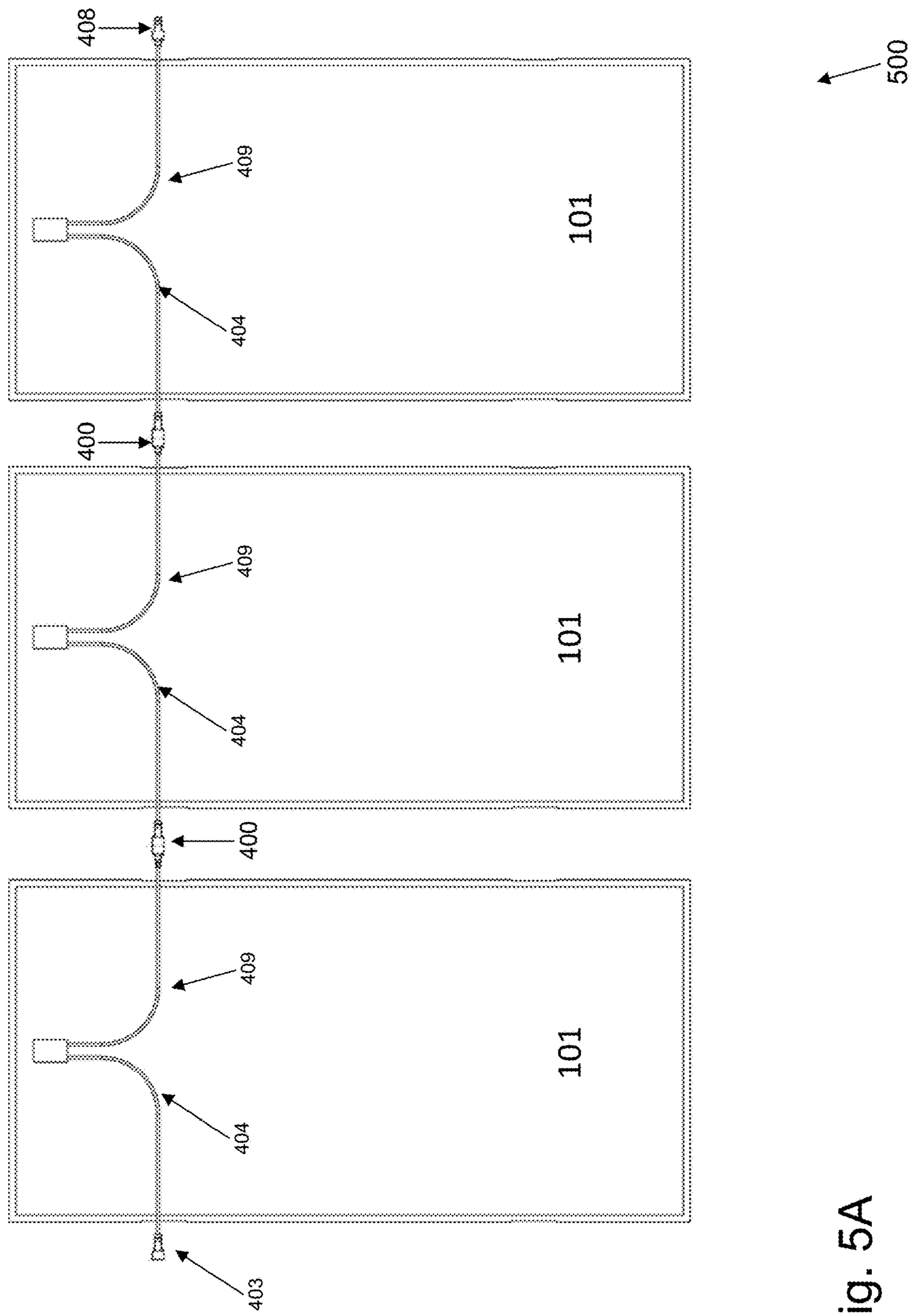

Fig. 5A

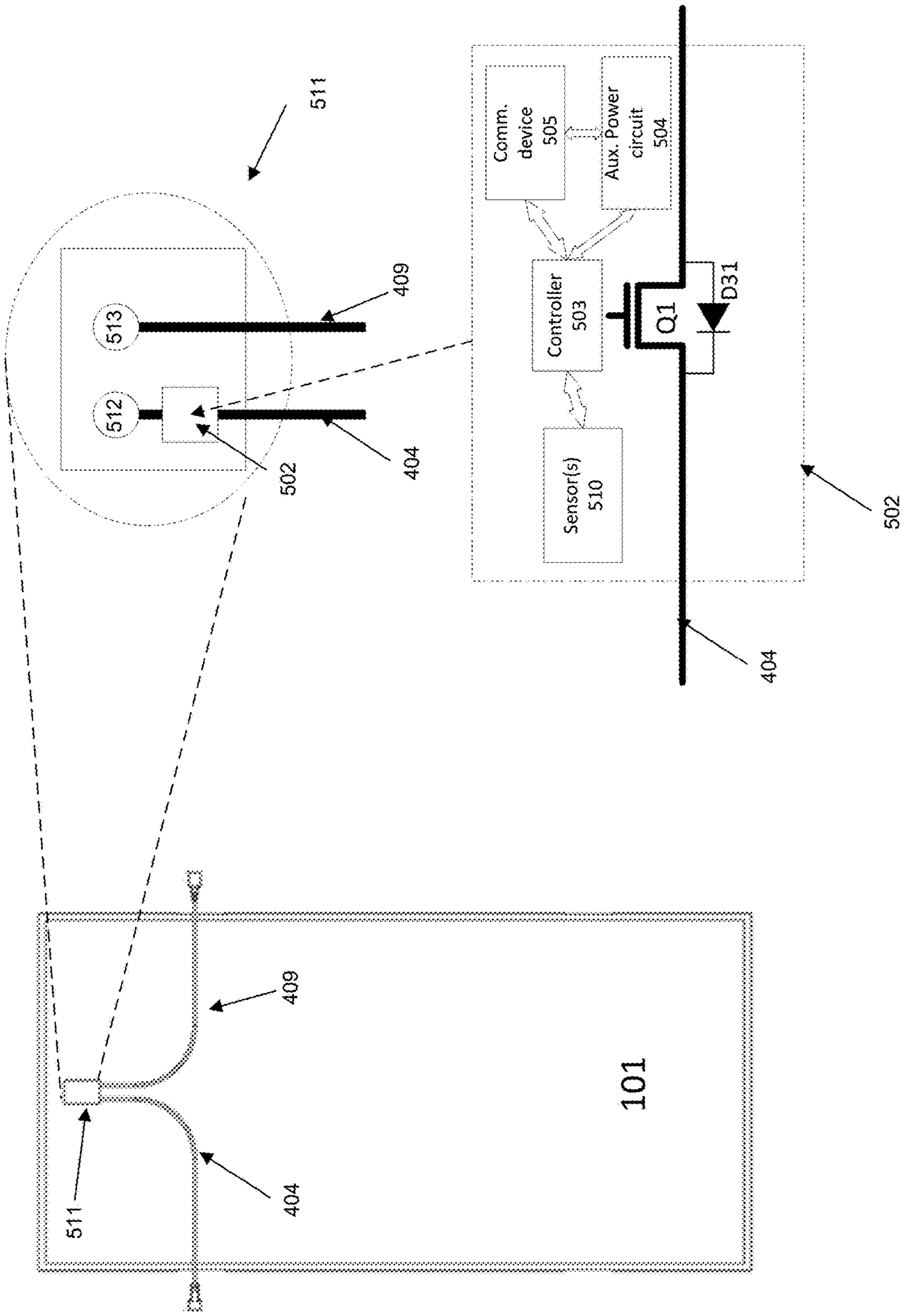
511
513
512
409
502
404
Comm. device 505
Aux. Power circuit 504
Controller 503
Q1
D31
Sensor(s) 510
502
404
409
511
404
101

Fig. 5B

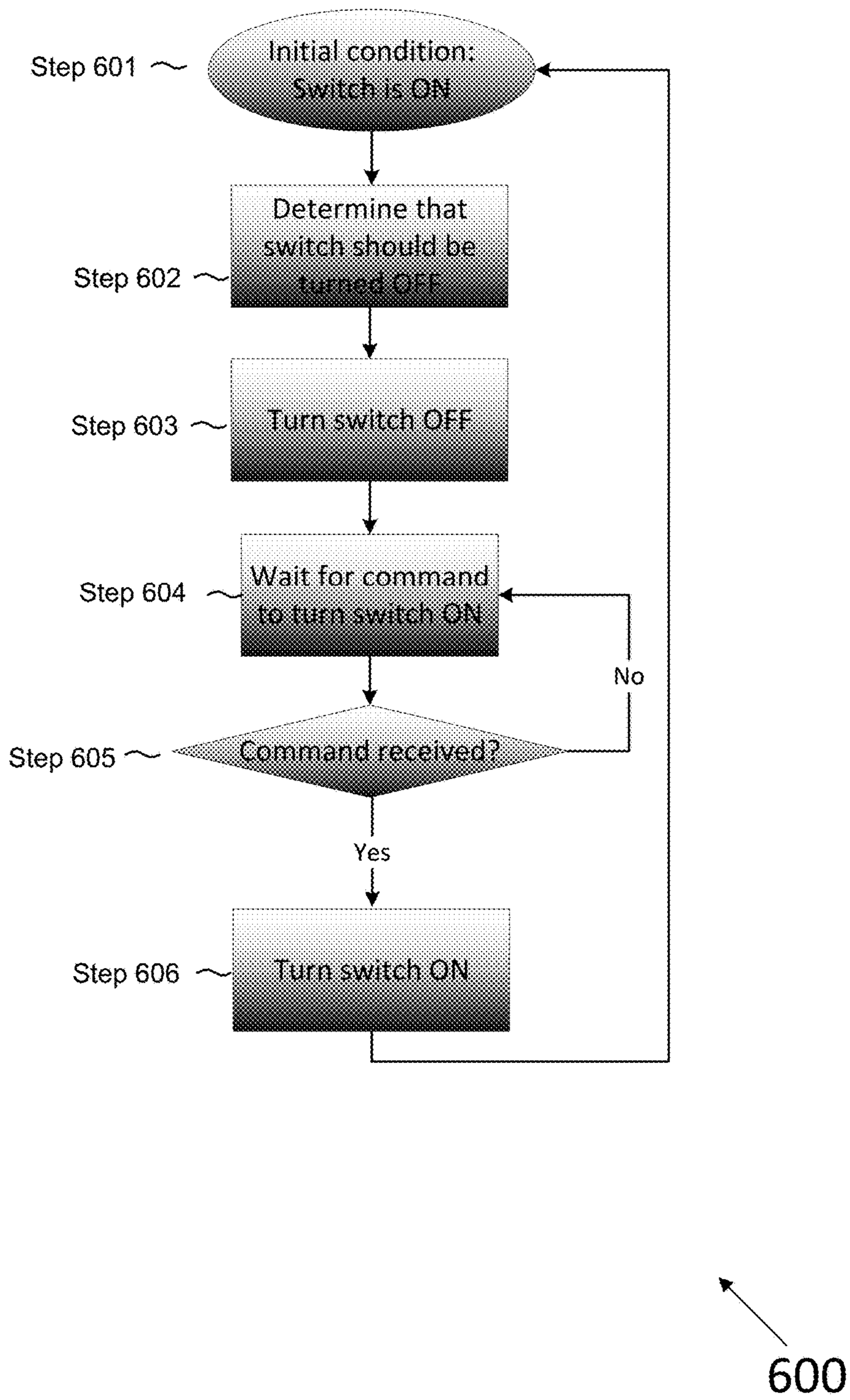
Step 601
Initial condition: Switch is ON
Step 602
Determine that switch should be turned OFF
Step 603
Turn switch OFF
Step 604
Wait for command to turn switch ON
Step 605
Command received?
No
Yes
Step 606
Turn switch ON
600

Fig. 6

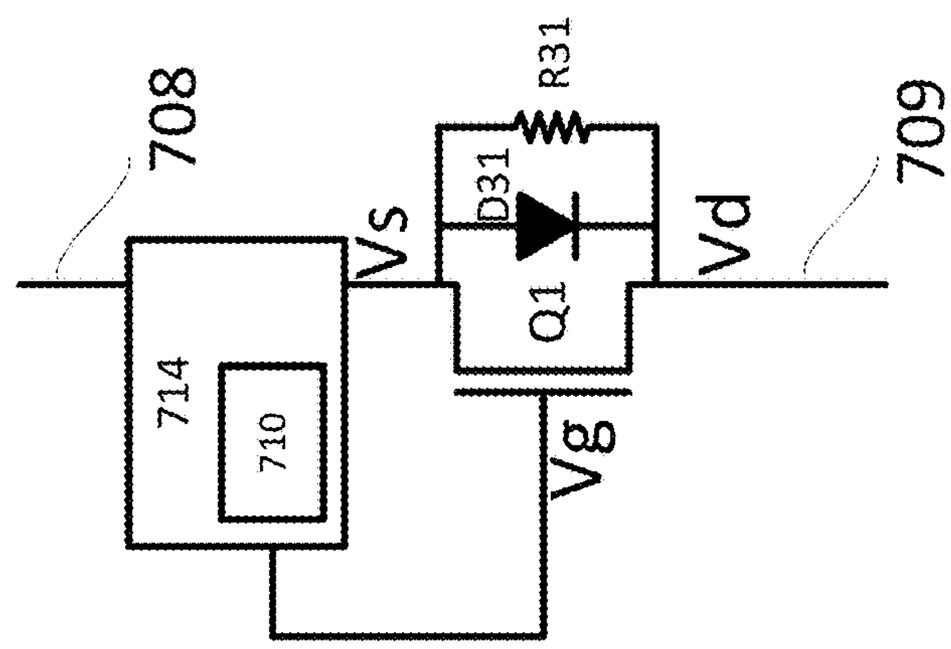

702b

Fig. 7B

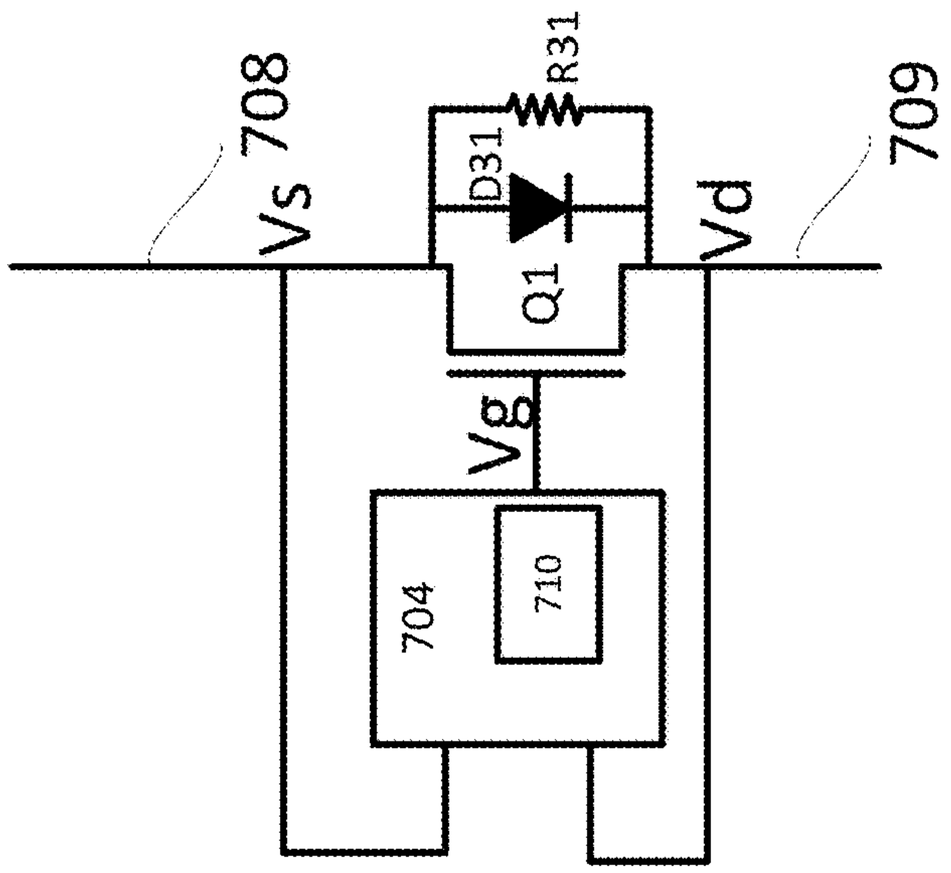

702a

Fig. 7A

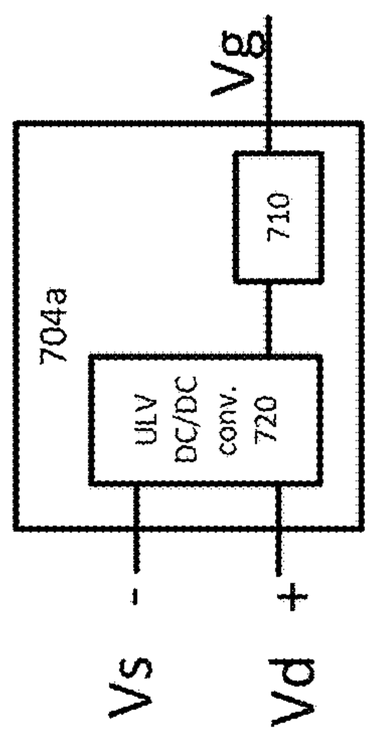
Vs
Vd
704a
ULV DC/DC conv. 720
710
Vg

Fig. 7C

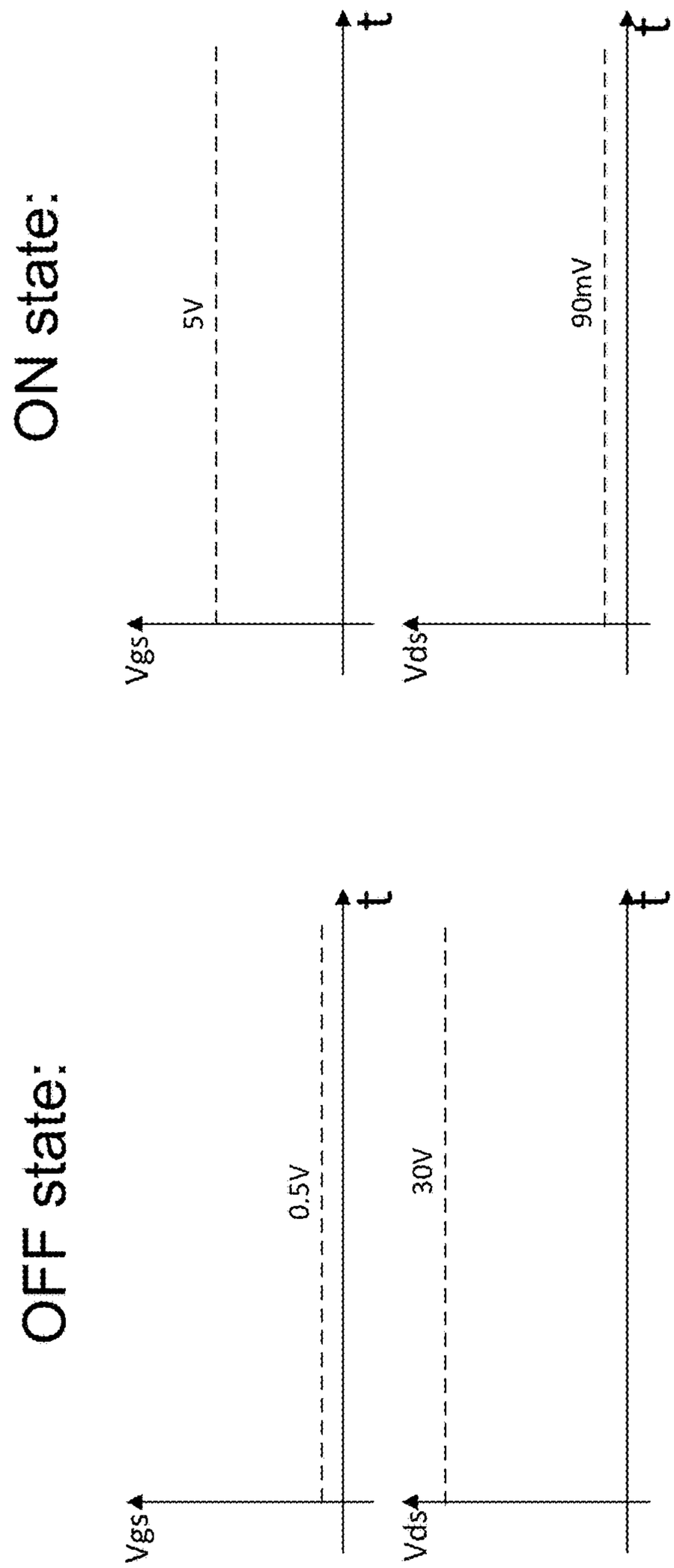
ON state:
Vgs
5V
t
Vds
90mV
t
OFF state:
Vgs
0.5V
t
Vds
30V
t

Fig. 7D

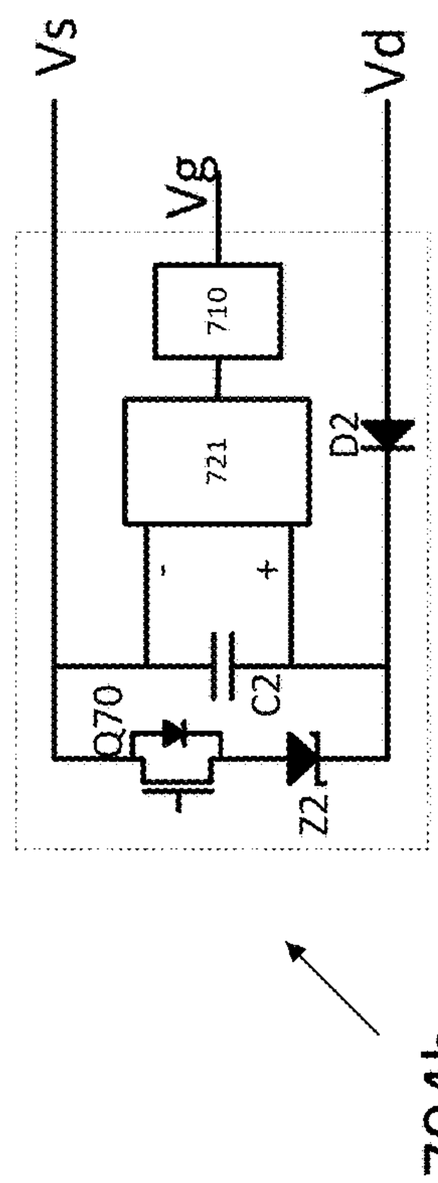
Vs
Vg
Vd
710
721
D2
C2
Q70
Z2
704b

Fig. 7E

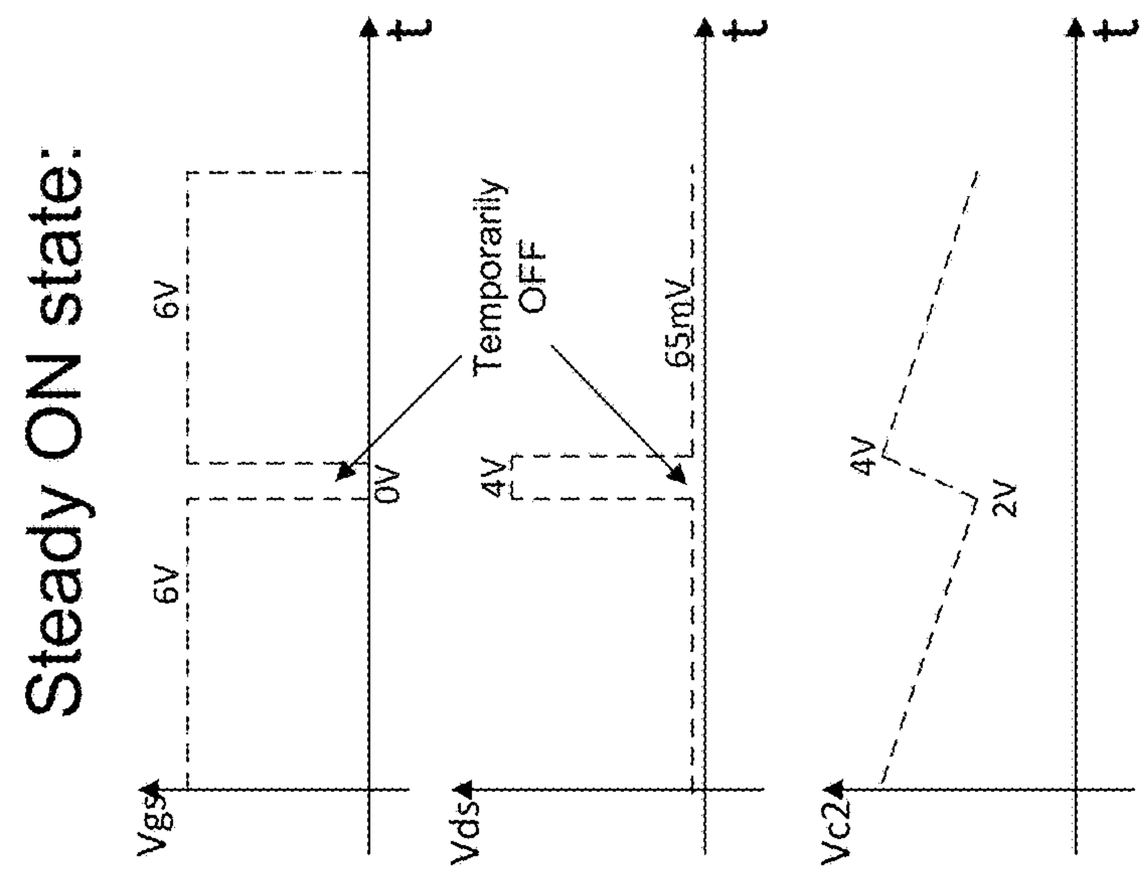
Steady ON state:
Vgs
6V
0V
6V
t
Vds
4V
Temporarily OFF
65mV
t
Vc2
4V
2V
t

Fig. 7F

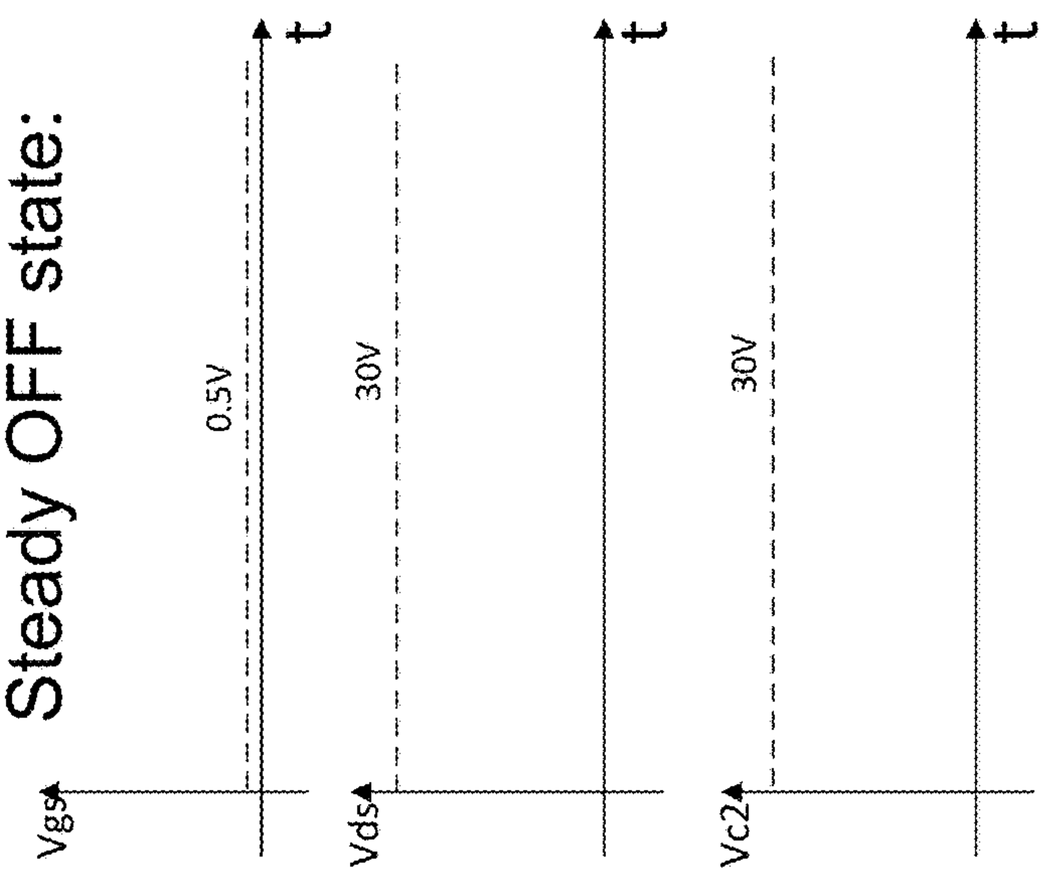
Steady OFF state:
Vgs
0.5V
t
Vds
30V
t
Vc2
30V
t

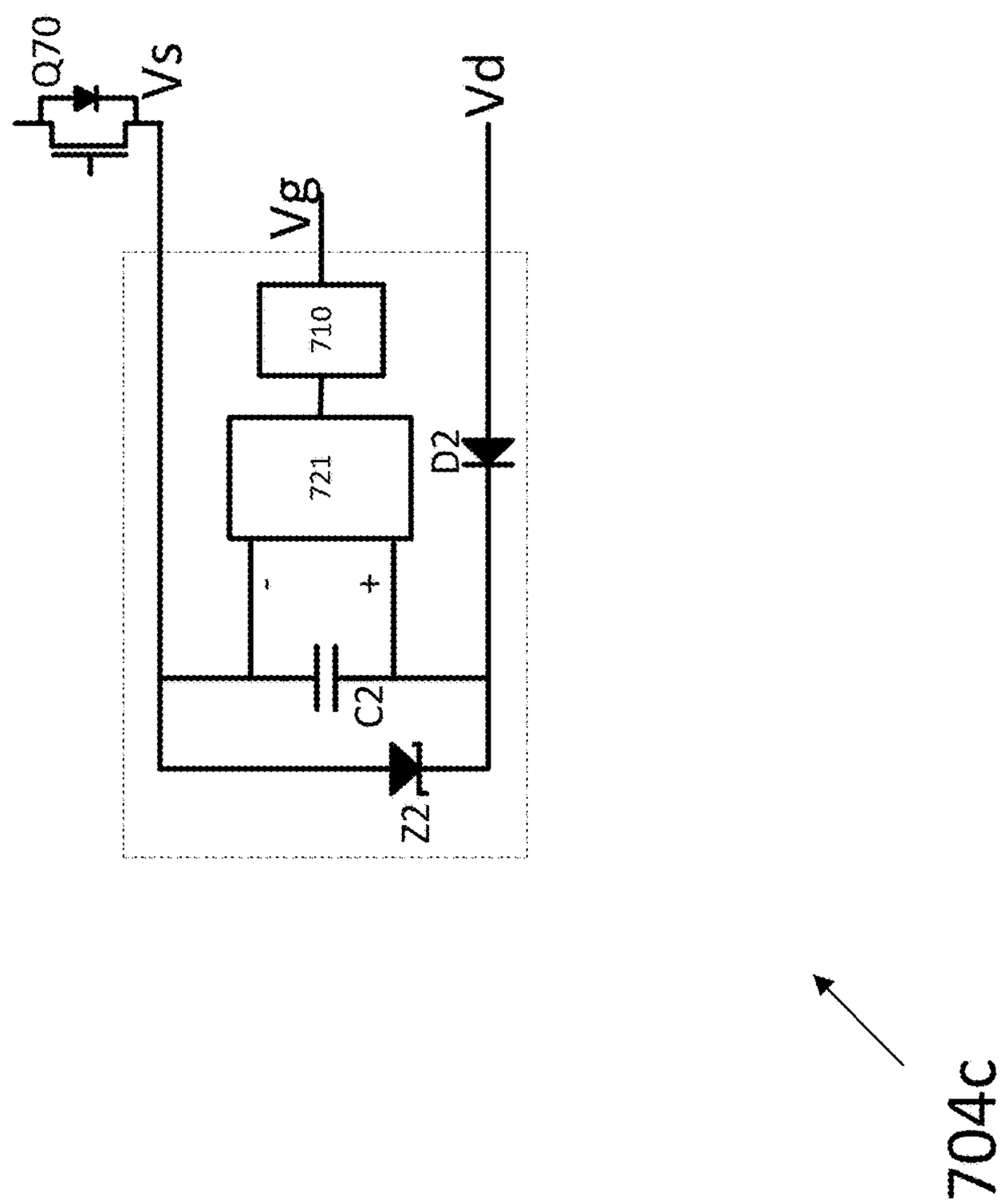

Fig. 7G

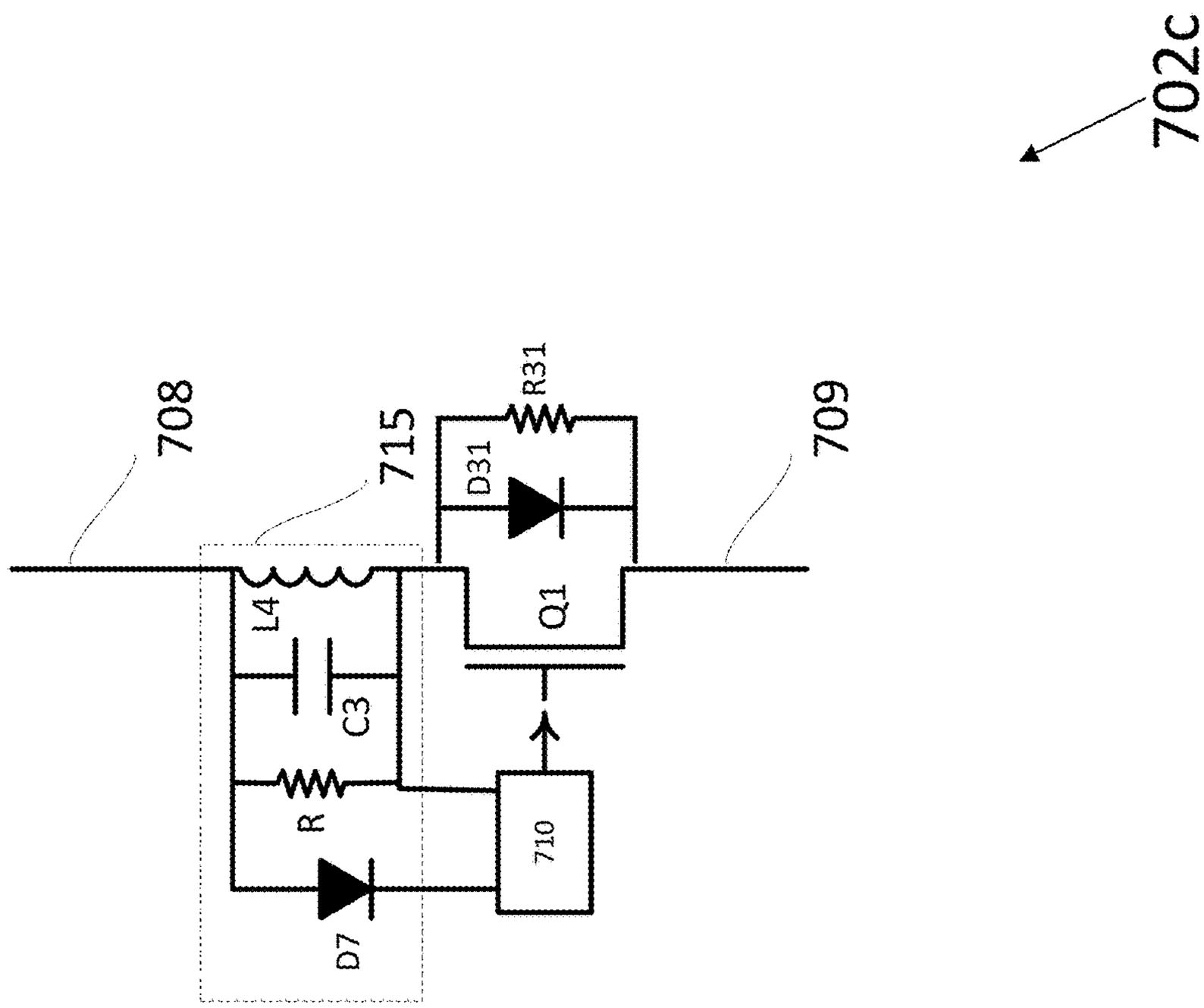

Fig. 7H

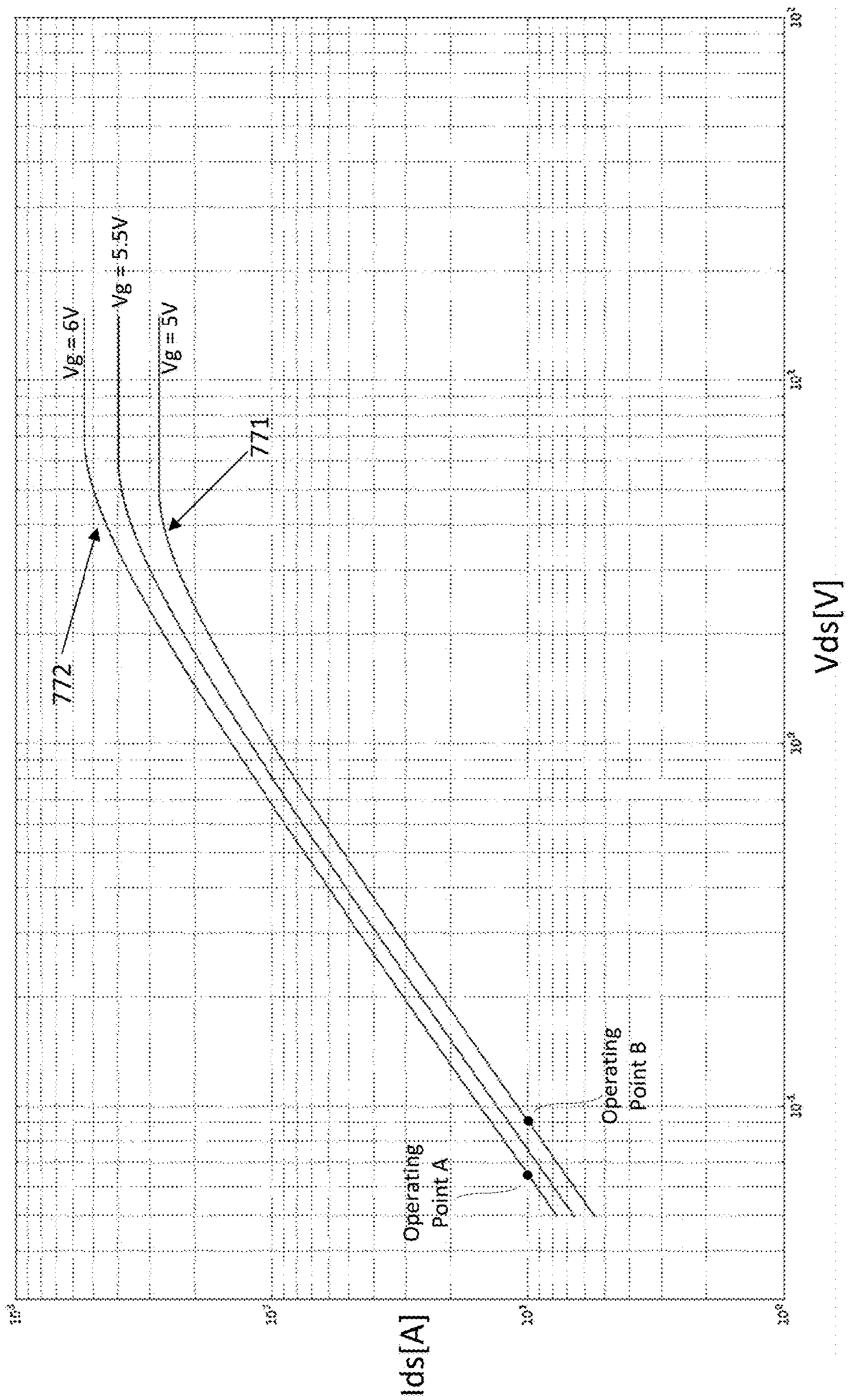
770
Vg = 6V
Vg = 5.5V
Vg = 5V
771
772
Operating Point A
Operating Point B
Ids[A]
Vds[V]

Fig. 7I

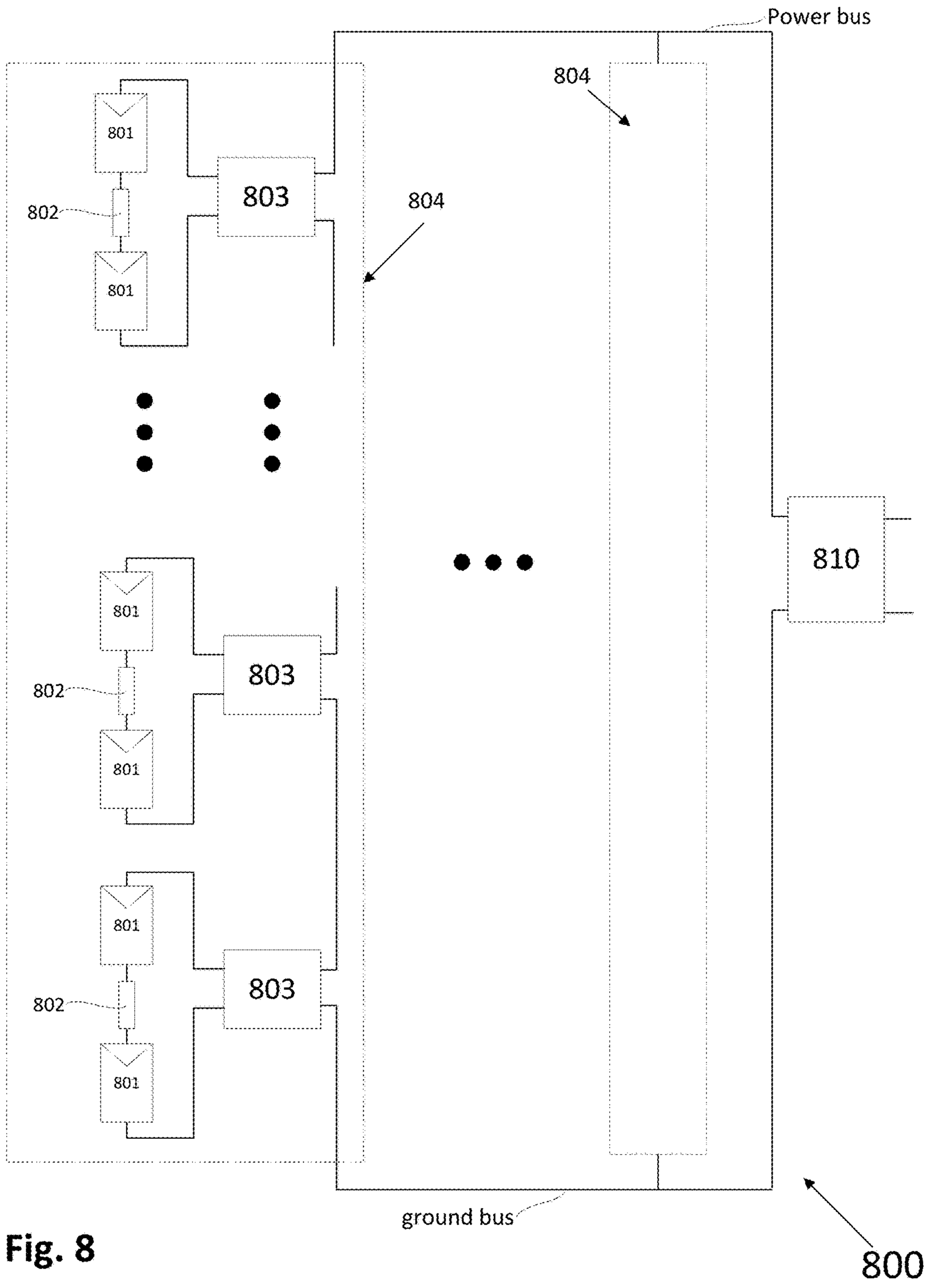
Power bus
804
801
803
804
802
801
810
801
803
802
801
801
803
802
801
ground bus
800

Fig. 8

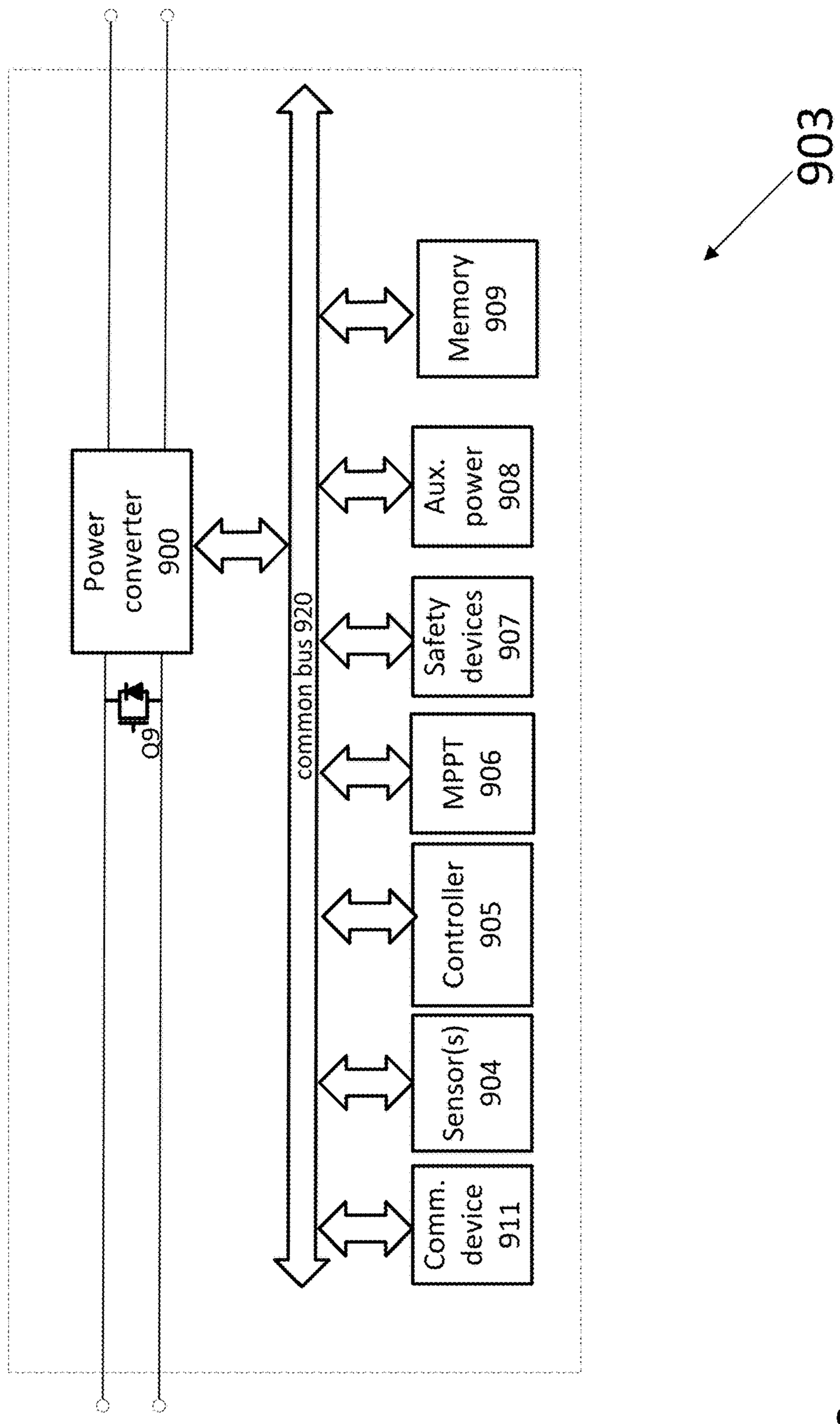
903
Power converter 900
Q9
common bus 920
Memory 909
Aux. power 908
Safety devices 907
MPPT 906
Controller 905
Sensor(s) 904
Comm. device 911

Fig. 9

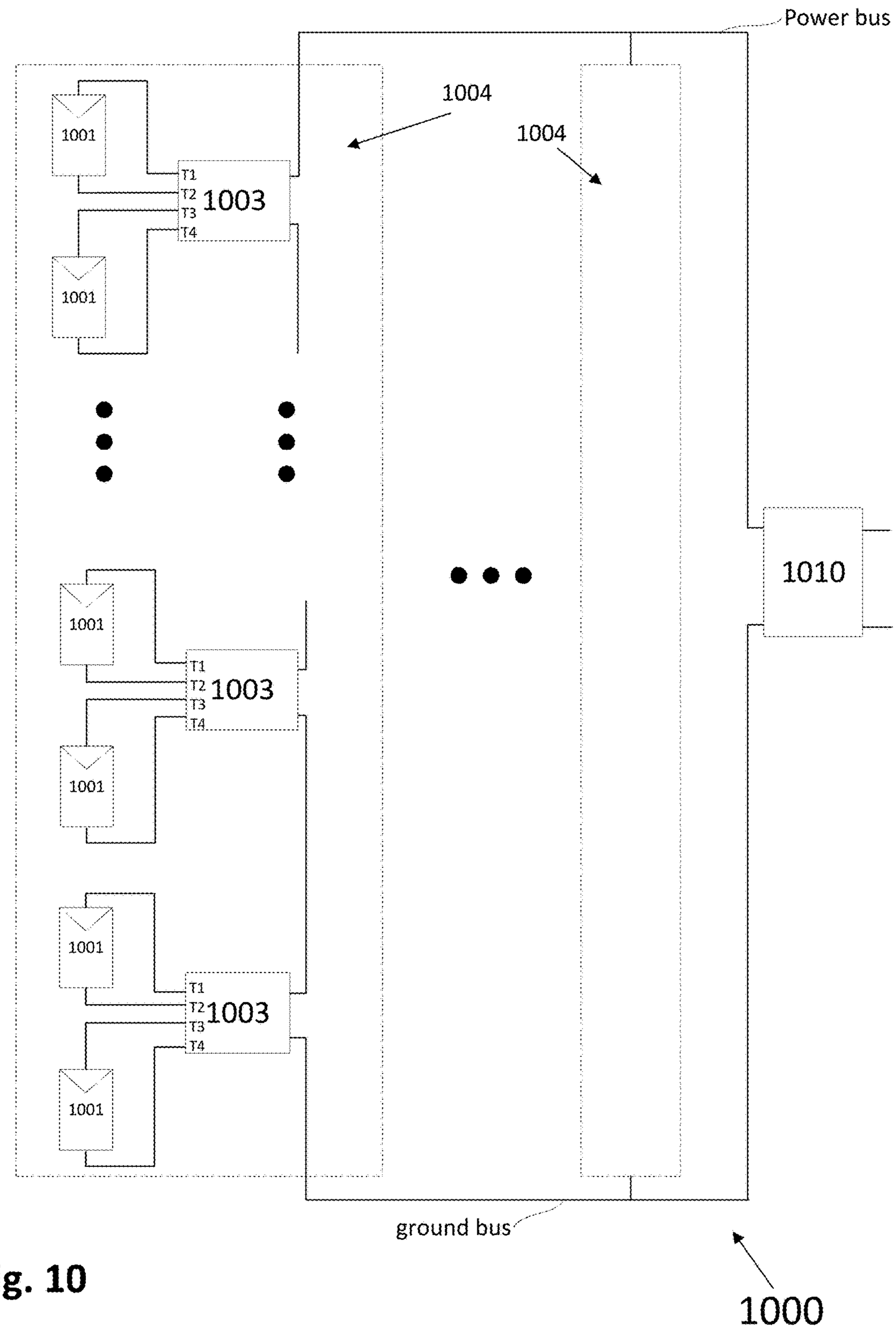
Power bus
1004
1004
1001
T1
T2
T3
T4
1003
1001
1001
T1
T2
T3
T4
1003
1001
1001
T1
T2
T3
T4
1003
1001
1010
ground bus
1000

Fig. 10

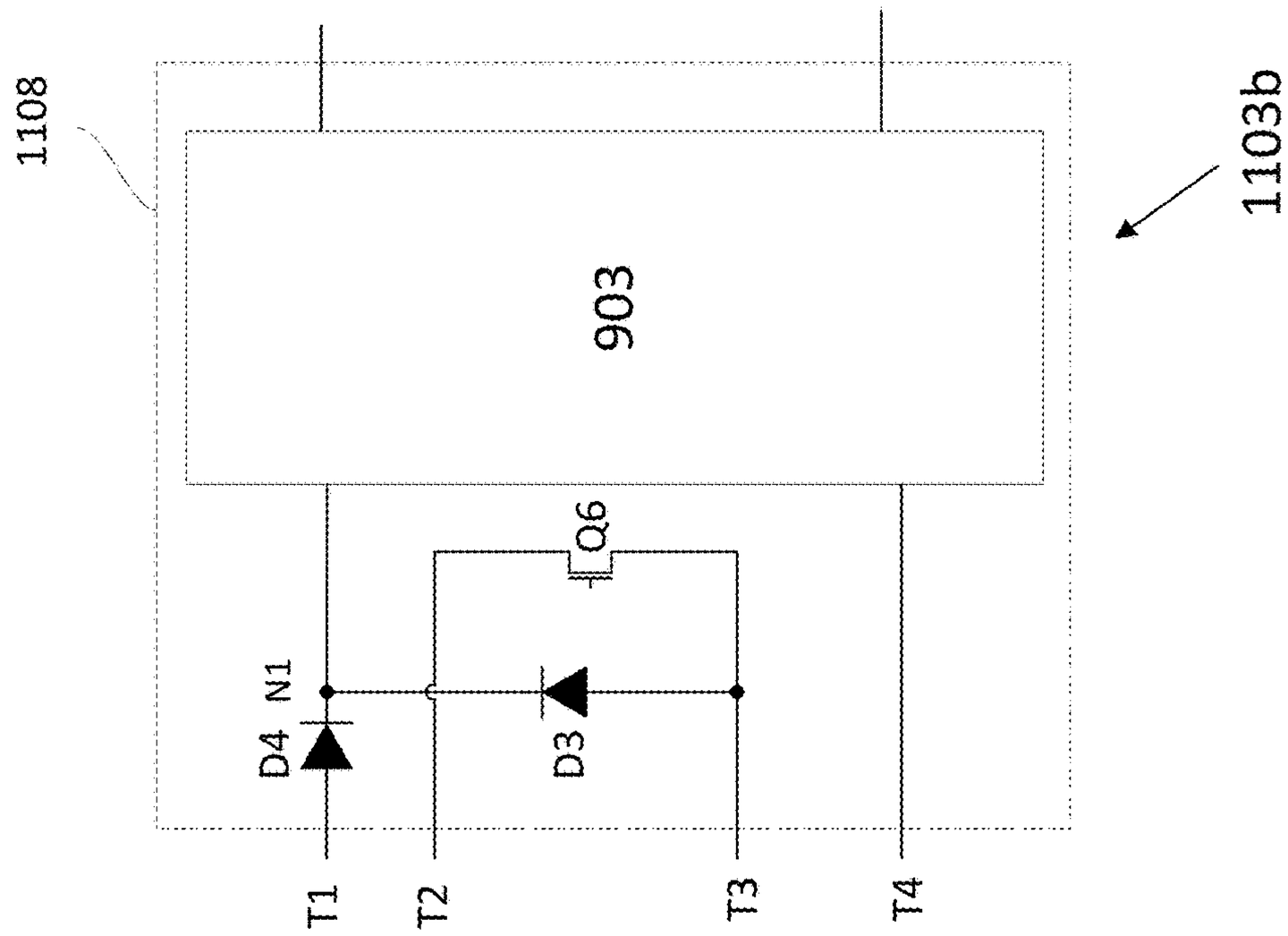

Fig. 11B

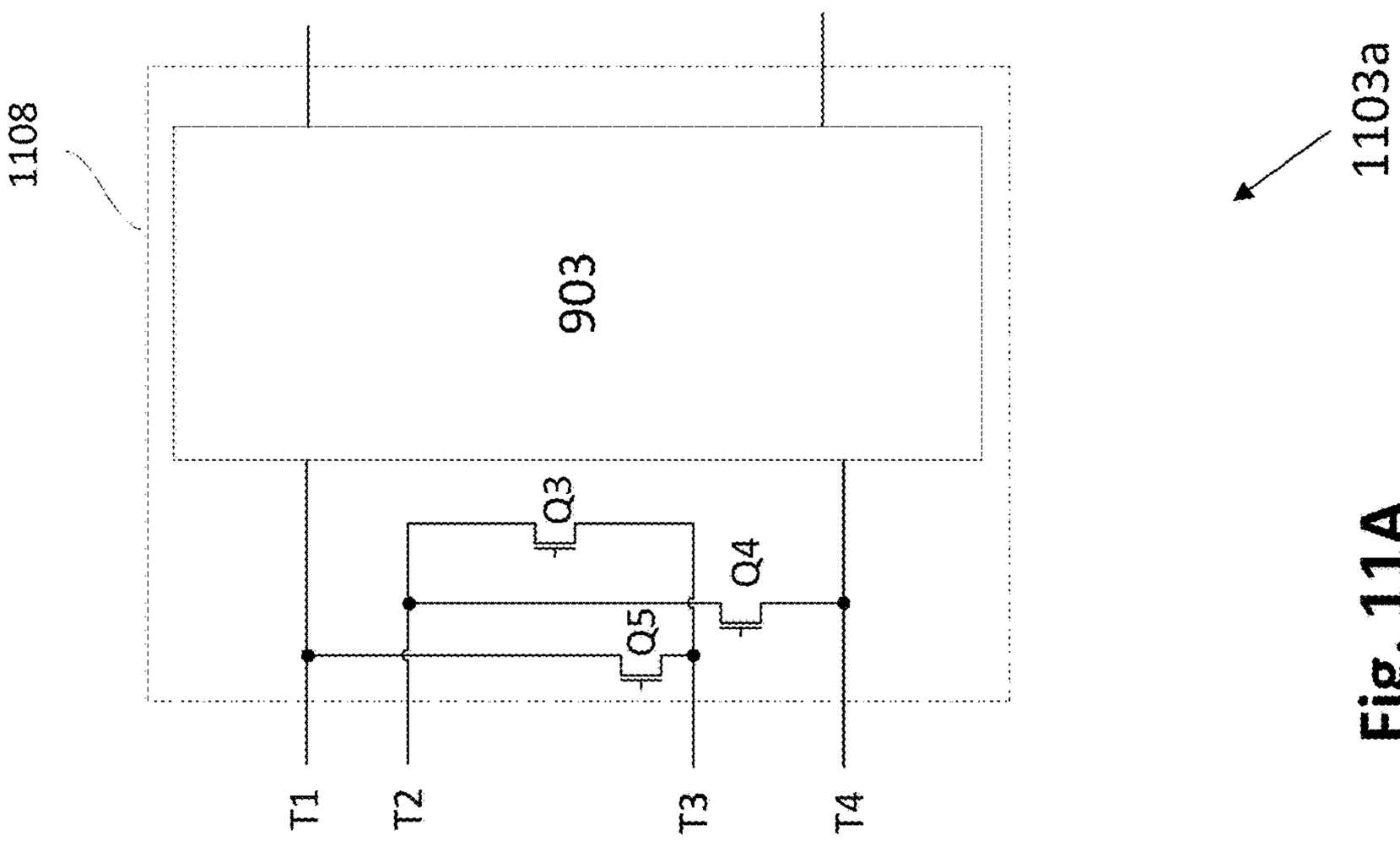

Fig. 11A

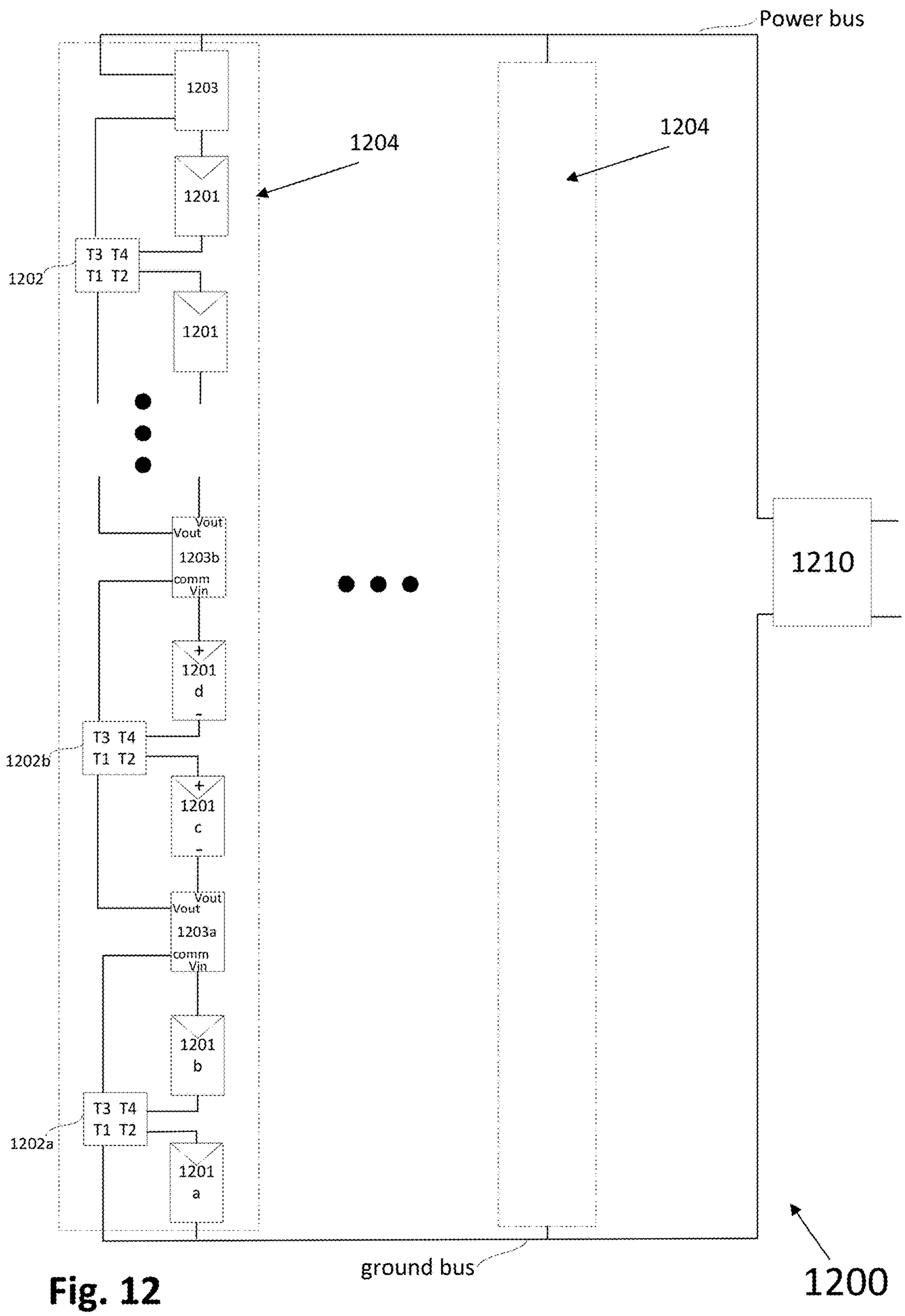
Power bus
1203
1204
1204
1201
T3 T4
T1 T2
1202
1201
Vout
Vout
1203b
comm
Vin
1210
+
1201
d
-
T3 T4
T1 T2
1202b
+
1201
c
-
Vout
Vout
1203a
comm
Vin
1201
b
T3 T4
T1 T2
1202a
1201
a
ground bus
1200

Fig. 12

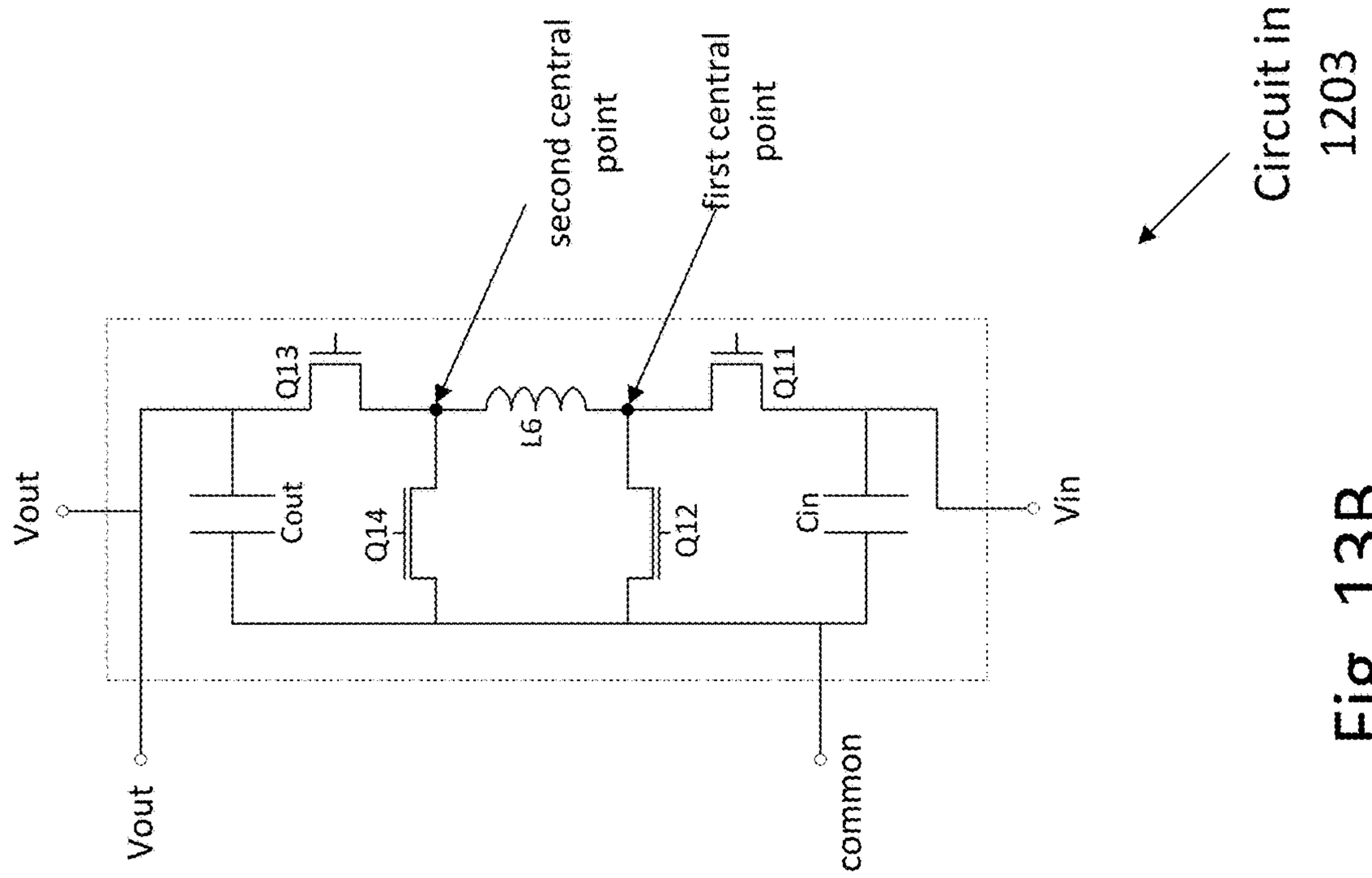

Fig. 13B

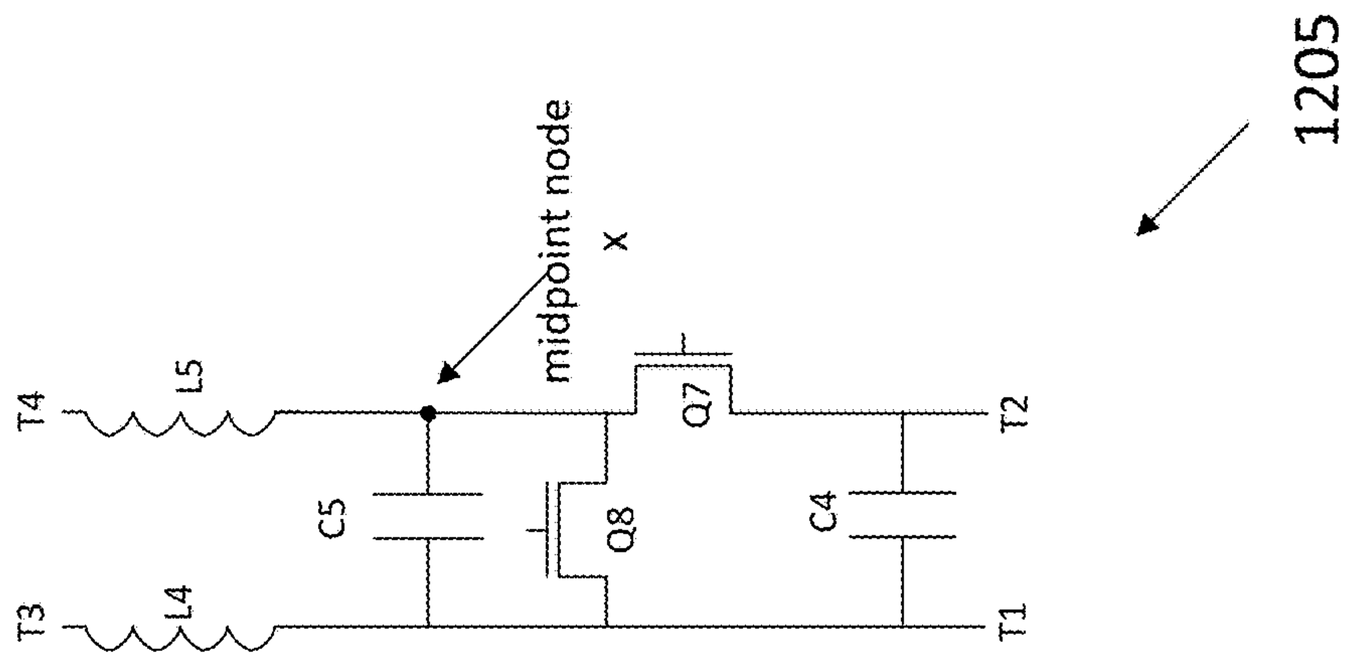

Fig. 13A

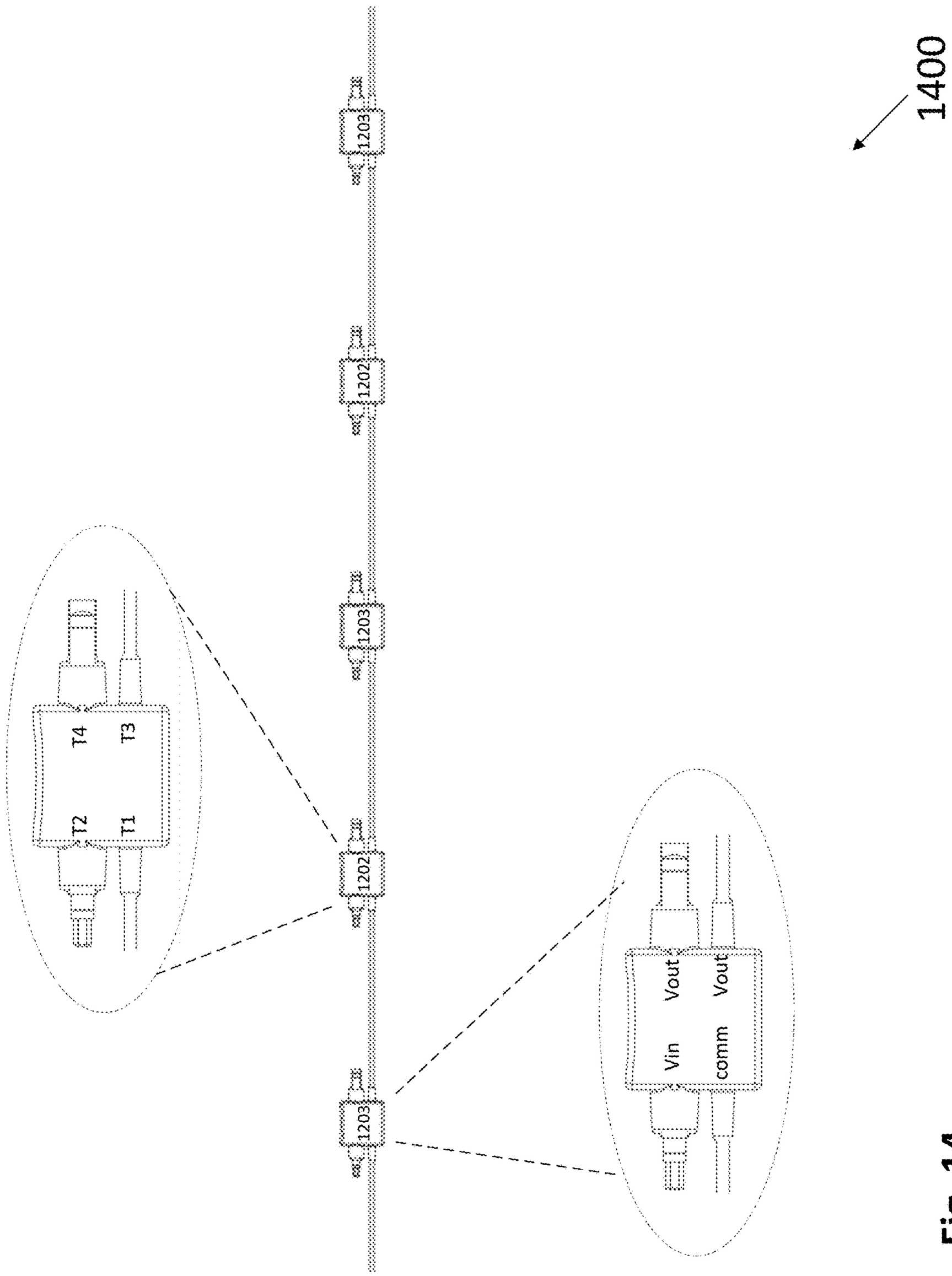

Fig. 14

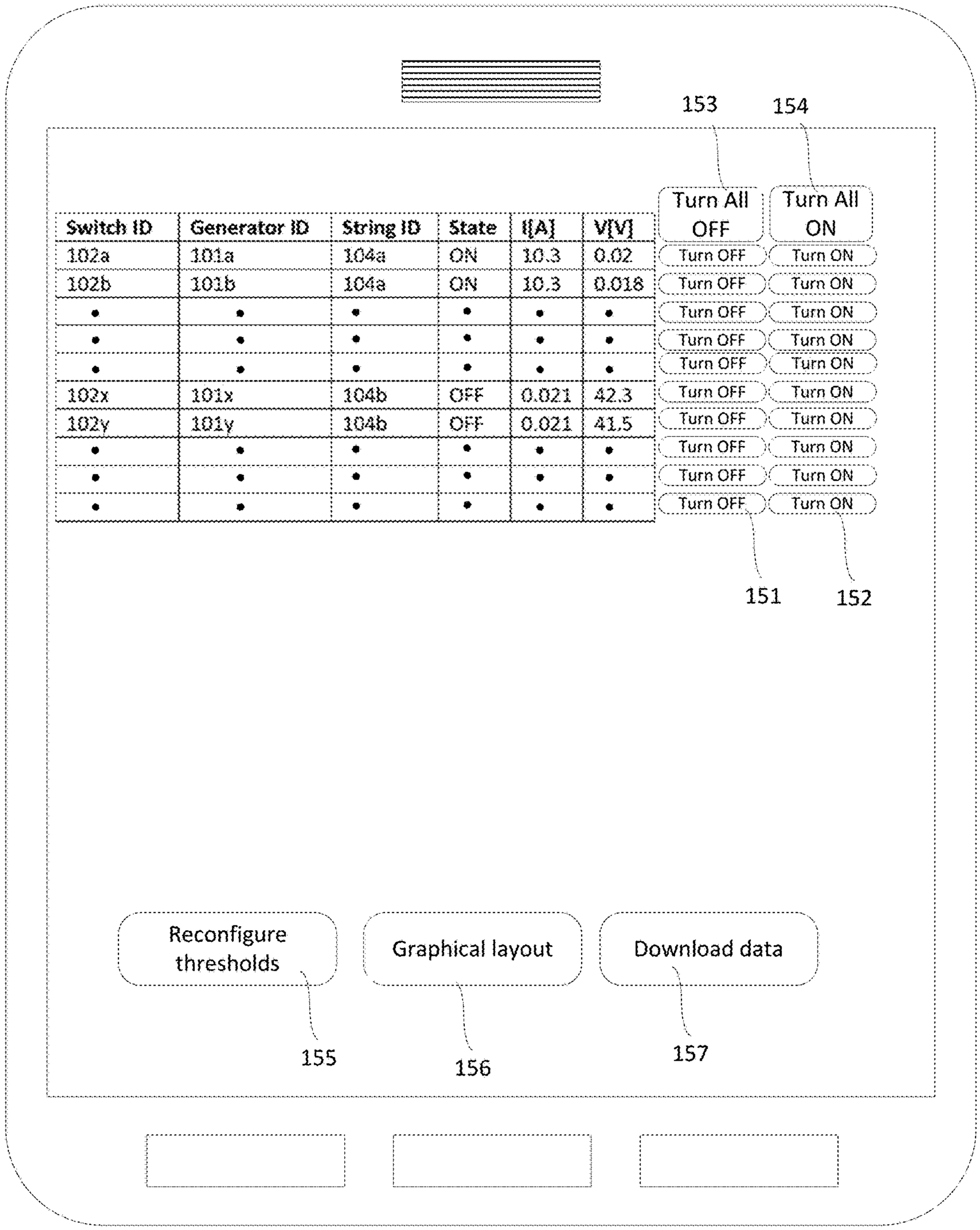
153
154
Turn All OFF
Turn All ON
Switch ID
Generator ID
String ID
State
I[A]
V[V]
102a 101a 104a ON 10.3 0.02
102b 101b 104a ON 10.3 0.018
102x 101x 104b OFF 0.021 42.3
102y 101y 104b OFF 0.021 41.5
Turn OFF
Turn ON
151
152
Reconfigure thresholds
Graphical layout
Download data
155
156
157

Fig. 15

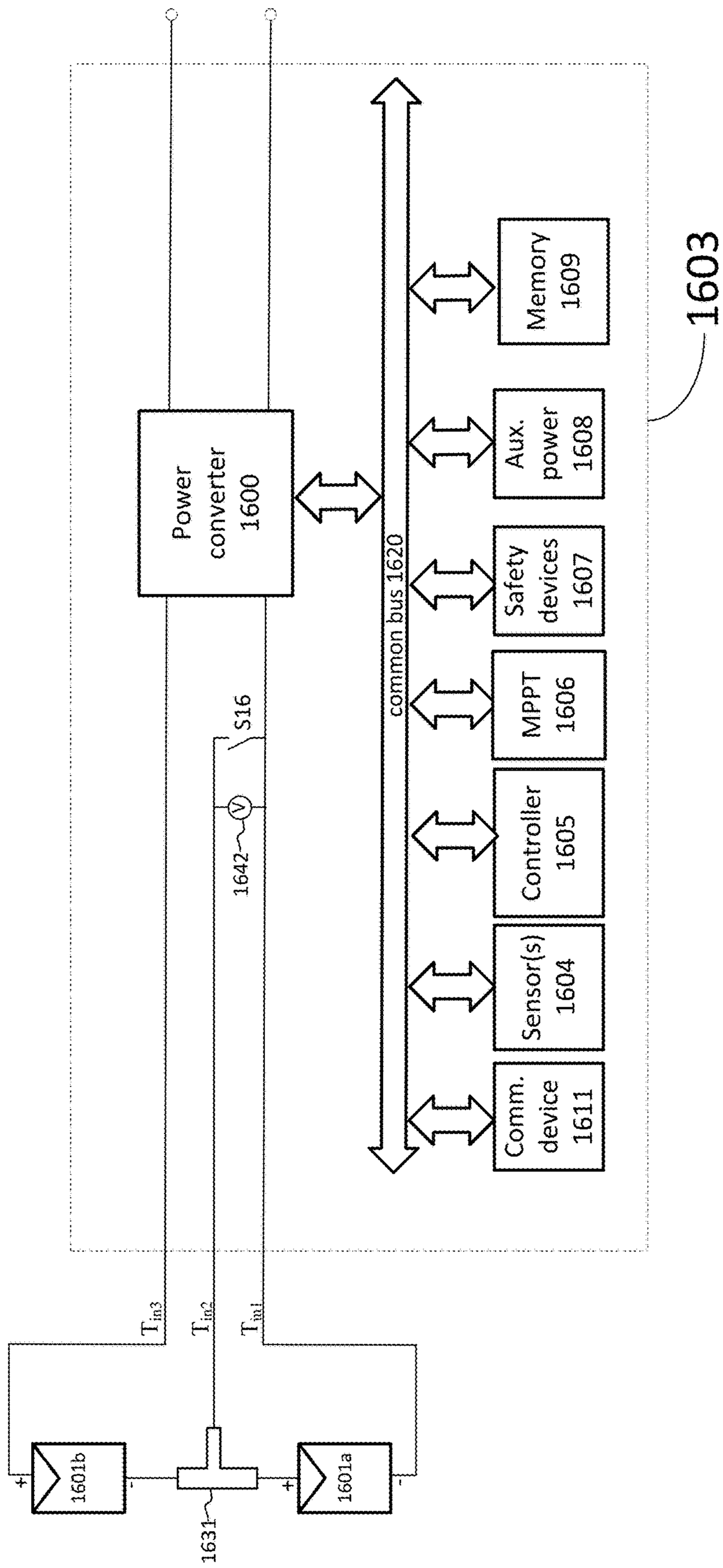
1603
Power converter 1600
common bus 1620
Memory 1609
Aux. power 1608
Safety devices 1607
MPPT 1606
Controller 1605
Sensor(s) 1604
Comm. device 1611
S16
1642
T_{in3}
T_{in2}
T_{in1}
1601b
1601a
1631

Fig. 16

SAFETY SWITCH FOR PHOTOVOLTAIC SYSTEMS

CROSS-REFERENCE TO RELATED APPLICATIONS

[0001] The present application a continuation-in-part and claims priority to U.S. nonprovisional application Ser. No. 15/250,068, filed Aug. 29, 2016, entitled "Safety Switch for Photovoltaic Systems," hereby incorporated by reference in its entirety. The present application claims priority to U.S. provisional patent application Ser. No. 62/318,303, filed Apr. 5, 2016, entitled "Optimizer Garland," hereby incorporated by reference in its entirety. Additionally, the present application claims priority to U.S. provisional patent application Ser. No. 62/341,147, filed May 25, 2016, entitled "Photovoltaic Power Device and Wiring," hereby incorporated by reference in its entirety.

BACKGROUND

[0002] Safety regulations may require disconnecting and/or short-circuiting one or more photovoltaic (PV) generators or other components in case of an unsafe condition occurring in a photovoltaic installation. For example, safety regulations require that in case of an unsafe condition (e.g. a fire, a short-circuit, carrying out of maintenance work), the maximum voltage at any point in a photovoltaic installation may not exceed a safe voltage level. In some photovoltaic systems, it may be necessary to disconnect and/or short-circuit one or more photovoltaic generator(s) to achieve the safe voltage requirement. While photovoltaic systems may be deployed for tens of years, safety regulations may change at shorter time intervals (e.g. every several years). It would be advantageous to have a controllable safety switch which may be controlled to disconnect or short-circuit a PV generator in case of a safety hazard, and which may be controlled to reconnect the photovoltaic generator once the system is safe again. It would be desirable for controllable safety switches to be cost-effective and easily deployed.

SUMMARY

[0003] The following summary is a short summary of some of the inventive concepts for illustrative purposes only, and is not intended to limit or constrain the inventions and examples in the detailed description. One skilled in the art will recognize other novel combinations and features from the detailed description.

[0004] Embodiments herein may employ safety switches and associated apparatuses and methods for controlling currents through branches and/or voltages at nodes in photovoltaic (PV) installations.

[0005] In illustrative embodiments comprising one or more electrical systems, a group of electrical safety switches may be electrically connectable to a plurality of electrical power sources. The electrical safety switches may be controllable to maintain safe operation of the electrical systems.

[0006] In illustrative electrical systems, a safety switch may be deployed between serially-connected photovoltaic generators in a photovoltaic installation. In some embodiments, safety switches may be installed between each pair of PV generators. In some embodiments, the number and location of safety switches may be chosen with regard to current safety regulations, and in some embodiments, the number and location of safety switches may be chosen with regard to anticipated "worst-case" safety regulations. For example, in locales where adding, reconfiguring and/or removing system components is easy and inexpensive, safety switches may be deployed in a PV installation in accordance with the safety regulations at the time the installation was built. In locales where adding, reconfiguring and/or removing system components may be difficult or expensive, safety switches may be deployed in a manner that complies with a "worst-case" (i.e. most stringent) prediction of future regulations.

[0007] Illustrative safety switches according to some embodiments may be retrofit to existing photovoltaic installations and components. Illustrative safety switches according to some embodiments may be integrated in other PV system components (e.g. connectors, PV generators, power devices, combiner boxes, batteries and/or inverters), potentially reducing the cost of design and manufacturing of the safety switches, and increasing

[0008] In some embodiments, auxiliary power circuits are used to provide power to safety switches and associated controllers. In some embodiments, safety switches are located at system points which do not carry significant electrical power when the safety switches are in a particular state (e.g., when safety switches are in the ON state). Illustrative auxiliary power circuits are disclosed herein, along with associated methods for providing power to the auxiliary power circuits and safety switches regardless of the state of the safety switches.

[0009] In some embodiments, components and design of safety switches may be selected to regulate or withstand electrical parameters when illustrative safety switches are in the ON or OFF states. For example, some illustrative safety switches may comprise shunt resistors sized to regulate electrical current flowing through safety switches when the safety switches are in the OFF position.

[0010] Further embodiments include photovoltaic power devices comprising internal circuitry configured to limit a voltage between input terminals to the photovoltaic power devices in case of a potentially unsafe condition while continuously providing operational power to the photovoltaic power devices.

[0011] Further embodiments include electrical circuits for interconnecting photovoltaic generators and photovoltaic power devices configured to limit a voltage between various system nodes while continuously providing operational power to the photovoltaic power devices.

[0012] Further embodiments include a chain of preconnected photovoltaic power devices with associated safety switches, which may provide a cost-effective, easy way to wire a photovoltaic generation system along with associated safety switches.

[0013] In some embodiments, safety switches may be in communication with accompanying system devices, such as system control devices and/or end-user devices such as graphical user interfaces for monitoring applications.

[0014] Further embodiments include user interfaces for monitoring the state of and parameters measured by safety switches in illustrative power systems. A system owner or operator may be able to view a list of system safety switches, associated switch states and electrical parameter measured thereby. In some embodiments, the list may be a graphical user interface (GUI) viewable on a computing device, such as a computer monitor, tablet, smart-television, smartphone,

or the like. In some embodiments, the system operator may be able to manually control safety switches (e.g. by pressing buttons).

[0015] As noted above, this Summary is merely a summary of some of the features described herein and is provided to introduce a selection of concepts in a simplified form that are further described below in the Detailed Description. The Summary is not exhaustive, is not intended to identify key features or essential features of the claimed subject matter and is not to be a limitation on the claims.

BRIEF DESCRIPTION OF THE DRAWINGS

[0016] These and other features, aspects, and advantages of the present disclosure will become better understood with regard to the following description, claims, and drawings. The present disclosure is illustrated by way of example, and not limited by, the accompanying figures.

[0017] FIG. **1**A illustrates a photovoltaic system configuration according to various aspects of the present disclosure.

[0018] FIG. **1**B illustrates a photovoltaic system configuration according to various aspects of the present disclosure.

[0019] FIG. **2** illustrates part of a photovoltaic system configuration according to various aspects of the present disclosure.

[0020] FIG. **3** illustrates a safety switch according to various aspects of the present disclosure.

[0021] FIGS. **4**A-**4**B illustrate a safety switch according to various aspects of the present disclosure.

[0022] FIG. **5**A illustrates part of a photovoltaic system configuration according to various aspects of the present disclosure.

[0023] FIG. **5**B illustrates a photovoltaic generator according to various aspects of the present disclosure.

[0024] FIG. **6** illustrates a method for operating a safety switch according to various aspects of the present disclosure.

[0025] FIGS. **7**A-**7**C illustrate circuits for providing operational power to a safety switch according to various aspects of the present disclosure.

[0026] FIG. **7**D illustrates a timing diagram depicting some of the operational parameters of a safety switch according to various aspects of the present disclosure.

[0027] FIG. **7**E illustrates a circuit for providing operational power to a safety switch according to various aspects of the present disclosure.

[0028] FIG. **7**F illustrates a timing diagram depicting some of the operational parameters of a safety switch according to various aspects of the present disclosure.

[0029] FIG. **7**G illustrates a circuit for providing operational power to a safety switch according to various aspects of the present disclosure.

[0030] FIG. **7**H illustrates a circuit for providing operational power to a safety switch according to various aspects of the present disclosure.

[0031] FIG. **7**I illustrates part of an illustrative datasheet indicating possible operating points for operating a transistor according to various aspects of the present disclosure.

[0032] FIG. **8** illustrates a photovoltaic system configuration according to various aspects of the present disclosure.

[0033] FIG. **9** illustrates a photovoltaic power device according to various aspects of the present disclosure.

[0034] FIG. **10** illustrates a photovoltaic system configuration according to various aspects of the present disclosure.

[0035] FIGS. **11**A-**11**B illustrate a photovoltaic power devices according to various aspects of the present disclosure.

[0036] FIG. **12** illustrates a photovoltaic system configuration according to various aspects of the present disclosure.

[0037] FIG. **13**A illustrates circuitry of a safety switch according to various aspects of the present disclosure.

[0038] FIG. **13**B illustrates circuitry of a photovoltaic power device according to various aspects of the present disclosure.

[0039] FIG. **14** illustrates a portion of a chain of photovoltaic power devices according to various aspects of the present disclosure.

[0040] FIG. **15** is an illustrative mockup of a user interface for an electrical system according to illustrative embodiments.

[0041] FIG. **16** illustrates a photovoltaic power device according to various aspects of the present disclosure.

DETAILED DESCRIPTION

[0042] In the following description of various illustrative embodiments, reference is made to the accompanying drawings, which form a part hereof, and in which is shown, by way of illustration, various embodiments in which aspects of the disclosure may be practiced. It is to be understood that other embodiments may be utilized and structural and functional modifications may be made, without departing from the scope of the present disclosure.

[0043] Reference is now made to FIG. **1**A, which shows a photovoltaic (PV) system according to illustrative embodiments. PV system **100** may comprise a plurality of PV strings **104** coupled in parallel between a ground bus and a power bus. Each of PV strings **104** may comprise a plurality of serially-connected PV generators **101** and a plurality of safety switches **102**. PV generators **101** may comprise one or more photovoltaic cells(s), module(s), panel(s) or shingle(s). In some embodiments, PV generators **101** may be replaced by direct current (DC) batteries or alternative direct current or alternating current (AC) power sources.

[0044] In the illustrative embodiment of FIG. **1**A, a safety switch **102** is disposed between each pair of PV generators **101**. In some embodiments (e.g. the embodiment shown in FIG. **2**) a safety switch **102** may be disposed between groups of more than one serially-connected PV generators. Safety switch **102** may comprise a control device and a communication device, and may be operated to disconnect adjacent PV generators when receiving (e.g. via the communication device) a command to disconnect PV generators.

[0045] In some embodiments, the power and ground buses may be input to system power device **110**. In some embodiments, system power device **110** may include a DC/AC inverter and may output alternating current (AC) power to a power grid, home or other destinations. In some embodiments, system power device **110** may comprise a combiner box, transformer and/or safety disconnect circuit. For example, system power device **110** may comprise a DC combiner box for receiving DC power from a plurality of PV strings **104** and outputting the combined DC power. In some embodiments, system power device **110** may include a fuse coupled to each string **104** for overcurrent protection, and/or one or more disconnect switches for disconnecting one or more PV strings **104**.

[0046] In some embodiments, system power device **110** may include or be coupled to a control device and/or a

communication device for controlling or communicating with safety switches **102**. For example, system power device **110** may comprise a control device such as a microprocessor, Digital Signal Processor (DSP) and/or a Field Programmable Gate Array (FPGA) configured to control the operation of system power device **110**. In some embodiments, system power device **110** may comprise multiple interacting control devices. System power device **110** may further comprise a communication device (e.g. a Power Line Communication circuit and/or a wireless transceiver) configured to communicate with linked communication devices included in safety switches **102**. In some embodiments, system power device **110** may comprise both a control device and a communication device, the control device configured to determine desirable modes of operation for PV power devices (e.g. power devices **103**), and the communication device configured to transmit operational commands and receive reports from communication devices included in the PV power devices.

[0047] System power device **110** may be coupled to any number of other devices and/or systems such as PV systems **100** (e.g., various discrete and/or interconnected devices such as disconnect(s), PV cell(s)/array(s), inverter(s), micro inverter(s), PV power device(s), safety device(s), meter(s), breaker(s), AC main(s), junction box(es), camera etc.), network(s)/Intranet/Internet, computing devices, smart phone devices, tablet devices, camera, one or more servers which may include data bases and/or work stations. System power device **110** may be configured for controlling the operation of components within PV system **100** and/or for controlling the interactions with other elements coupled to PV system **100**.

[0048] In some embodiments, the power and ground buses may be further coupled to energy storage devices such as batteries, flywheels or other energy storage devices.

[0049] Safety regulations may define a maximum allowable voltage between the ground bus and any other voltage point in PV system **100**, during both regular operating conditions and during potentially unsafe conditions. Similarly, safety regulations may define a maximum allowable voltage between any two voltage points in PV system **100**. In some scenarios, an unsafe condition in PV system **100** may require disconnecting or short-circuiting one or more of the PV generators **101** in a PV string **104**.

[0050] As a numerical example, an illustrative PV string **104** may comprise 20 serially-connected PV generators **101**. Each PV generator **101** may have an open-circuit voltage of 45V. In case of an unsafe condition (e.g. a fire, detection of an arc or a dangerous short-circuit somewhere in PV system **100**), safety regulations may require that system power device **110** cease drawing power from PV string **104**, resulting in an open-circuit voltage of 45·20=900V across PV string **104**. Safety regulations may further require that in case of an unsafe condition, the maximum voltage between any two points in PV system **100** may not exceed, for example, 80V. To comply with safety regulations, safety switches **102** may disconnect the plurality of PV generators **101** comprising PV string **104**, resulting in PV generators **101** (excluding the PV generators **101** coupled to the ground and power buses) having a "floating" voltage with regard to ground, and a voltage drop of about 45V between the two terminals of each PV generator.

[0051] In some embodiments, system power device **110** may respond to a potentially unsafe system condition by limiting the voltage across each PV string **104**. For example, system power device **110** may comprise an inverter configured to regulate a voltage of about 60V across each PV string **104** in case of a potentially unsafe condition.

[0052] Reference is now made to FIG. **1**B, which illustrates a single PV string **104** coupled to system power device **110**. In case of a potentially unsafe system condition, safety switches **102** may disconnect (i.e. each switch may move to the OFF state), and system power device **110** may apply a voltage to PV string **104**. In the numerical example of FIG. **1**B, each PV generator is assumed to be operating at an open-circuit voltage of 45V, and system power device **110** may apply a voltage of 60V across PV string **104**. Safety switches **102**, in accordance with embodiments disclosed herein, may be configured to provide and withstand a voltage drop of opposite polarity to the PV generators. In the numerical example of FIG. **1**B, PV string **104** comprises twenty PV generators **101** and twenty safety switches **102**. Each PV generator has a positive voltage drop of 45V, and each safety switch **102** has a negative voltage drop of 42V, providing a string voltage of (45−42)·20=60V. It may be noted that the voltage drop between each pair of locations in the PV system does not exceed 60V.

[0053] It is to be noted that the ratio of photovoltaic generators to safety switches, and the location of safety switches, may change depending on electrical parameters of photovoltaic generators and safety regulations. For example, if low-voltage PV generators (e.g. PV generators having an open-circuit voltage of 10V) are used as PV generators **101**, and safety regulations allow a maximum point-to-point voltage of 55V in case of a potentially unsafe condition, a single safety switch **102** may be disposed per five PV generators **101**. If safety regulations are changed to allow a maximum point-to-point voltage of 45V in case of a potentially unsafe condition, additional safety switches **102** may be added.

[0054] Safety switches **102** may comprise a resistor for regulating current through safety switches **102** when the switches are in the OFF state. For example, each of safety switches **102** may comprise a shunt resistor (e.g. resistor R**31** of FIG. **3**) having a resistance of about 1 kΩ, to regulate the OFF-state current to be about 42V/1 kΩ=42 mA. In general, the value of a shunt resistor may vary according to expected OFF-state voltages and currents, and may be between 10Ω and 5 kΩ.

[0055] In some embodiments, the values may vary depending on the regulated voltage provided by system power device **110** and the open-circuit voltage of each PV generator **101**. For example, string **104** may comprise ten PV generators, and ten safety switches, each PV generator having an open-circuit voltage of 30V, and system power device **110** may provide a voltage of 50V across PV string **104**. In that case, each safety switch may be operated to have a negative voltage of 25V, providing the string voltage of (30−25)·10=50V.

[0056] Reference is now made to FIG. **2**, which shows a photovoltaic string according to illustrative embodiments. PV string **204** may comprise a plurality of PV generators **101** and safety switches **102**. PV generators **101** may be similar to or the same as PV generators **101** of FIG. **1**A, and safety switches **102** may be similar to or the same as safety switches **102** of FIG. **1**. Safety switches **102** may be installed between each pair of PV generators **101**, such that each PV generator **101** (excluding the PV generators connected to the

ground and power buses) has a first terminal connected to a different PV generator **101** and a second terminal connected to a safety switch **102**. The arrangement illustrated in FIG. **2** may be appropriate in systems where the maximum allowed safe voltage is greater than or equal to double the open-circuit voltage of a single PV generator **101**. For example, if each PV generator **101** has an open-circuit voltage of 45V and the maximum allowed safe voltage is 100V, or each PV generator **101** has an open-circuit voltage of 30V and the maximum allowed safe voltage is 80V, the arrangement illustrated in FIG. **2** may reduce costs by reducing the required number of safety switches while still complying with safety regulations.

[0057] Reference is now made to FIG. **3**, which illustrates a safety switch according to illustrative embodiment. Safety switch **302** may be used as safety switch **102** in FIG. **1**A and FIG. **2**. Safety switch may comprise male connector **306** and female connector **307**, male connector **306** designed to fit a female connector features by a PV generator (e.g. PV generator **101**) and female connector **307** designed to fit a male connector features by a PV generator. Conductor **308** may provide an electrical connection to male connector **306**, and conductor **309** may provide an electrical connection to female connector **307**. In some embodiments, various interconnecting connectors may be used. Safety switch **302** may include a switching element disposed between conductor **308** and conductor **309**. In the illustrative embodiment of FIG. **3**, transistor Q**1** may be used as a switching element disposed between conductor **308** and conductor **309**. Safety switch **302** may further include controller **303** for controlling the operation of transistor Q**1**. Transistor Q**1** may be realized using various electrical devices, such as Metal-Oxide-Semiconductor Field Effect Transistor (MOSFET), Insulated Gate Bipolar Junction transistor (IGBT), Bipolar Junction Transistor (BJT), Junction gate field-effect transistor (HET) or other appropriate devices. In some embodiments, transistor Q**1** may be realized using multiple transistors connected in parallel, to improve electrical performance (e.g. to reduce losses). In the illustrative embodiments disclosed herein, transistor Q**1** and similar switching elements will be assumed to be MOSFETs comprising a body diode. Diode D**31** may be the body diode of transistor Q**1**. In some embodiments (e.g. in case Q**1** is a MOSFET comprising a low-quality body diode) a separate diode may be coupled in parallel to diode D**31** to function as an alternative bypass diode. Diode D**31** may be oriented to prevent forward bias of diode D**31** when the transistor is in the OFF position. Resistor R**31** may be disposed across the terminals of transistor Q**1**. Resistor R**31** may be sized to regulate the OFF-state resistance across the terminals of transistor Q**1**. For example, if the anticipated OFF-state voltage drop across transistor Q**1** is 40V, and the desired OFF-state leakage current through safety switch **302** is 20 mA, R**31** may be about 40V/20 mA=2000Ω. In some embodiments, R**31** might not be featured (e.g. if there is no need or desire to regulate the OFF-state leakage current).

[0058] Safety switch **302** may comprise communication device **305** for communicating with other devices and controller **303** for controlling the operation (e.g. turning ON and OFF) of transistor Q**1**. Controller **303** may be an analog circuit, microprocessor, Digital Signal Processor (DSP), Application-Specific Integrated Circuit (ASIC) and/or a Field Programmable Gate Array (FPGA). In some embodiments, communication device **305** may receive a command from an external device to change the state of transistor Q**1**, and communication device **305** may convey the command to controller **303**. Communication device **305** may communicate with external devices using various technologies such as Power Line Communications (PLC), acoustic communications transmitted over conductors **308** and **309**, and wireless communication protocols (e.g. Wi-Fi™, ZigBee™, Bluetooth™, cellular communications, etc.).

[0059] Auxiliary power circuit **304** may be coupled to conductors **308** and/or **309**, and may provide power to controller **303**, sensor/sensor interface(s) **310** and/or communication device **305**. Auxiliary power circuit **304** may be variously realized, with illustrative embodiments disclosed herein (e.g. in FIGS. **7**A-**7**C, **7**E, **7**H). In some embodiments, two or more of controller **303**, auxiliary power circuit **304** and communication device **305** may be integrated as a single unit. For example, in FIG. **7**C, communication device **305** may receive a PLC signal which also provides power to controller **303**.

[0060] In some embodiments, safety switch **302** may further comprise measurement sensor(s) and/or sensor interface(s) **310** for measuring parameters such as current, voltage and/or temperature. For example, sensor/sensor interface(s) **310** may include a current sensor for measuring the current through conductor **308** or conductor **309**, and/or a voltage sensor for measuring the voltage drop across transistor Q**1**, and/or a temperature sensor for measuring the temperature at or near male connector **306**, female connector **307** and/or transistor Q**1**. In some embodiments, sensor(s)/sensor interface(s) **310** may provide measurements to controller **303**, with controller **303** configured to take action (e.g. change the state of transistor Q**1**) according to the measurements received. For example, controller **303** may be configured to set the state of Q**1** to OFF if a high current is measured through conductor **309**, or if a high temperature is measured near male connector **306**. In some embodiments, controller **303** may provide the measurements obtained from sensor(s)/sensor interface(s) **310** to communication device **305**, with communication device **305** configured to transmit the measurements to a system controller or data-collection device (not explicitly depicted), such as system power device **110** of FIG. **1**. In some embodiments, sensor(s)/sensor interface(s) **310** may provide measurements directly to communication device **305**, bypassing controller **303**.

[0061] It should be noted that while a preferred embodiment of the disclosure includes providing transistor Q**1** for safety features (e.g. the ability to disconnect two PV generators from each other), other embodiments included herein might not include transistor Q**1**. Sensor/sensor interface(s) **310**, auxiliary power circuit **304** and communication device **305** may be combined to provide measurement and data-reporting features even without the safety advantages (e.g. ability to disconnect a photovoltaic generator) provided by safety transistor Q**1**.

[0062] Reference is now made to FIGS. **4**A-**4**B, which illustrates the connectivity of a safety switch according to illustrative embodiments. Safety switch **402** may be similar to or the same as safety switch **302** of FIG. **3**. Safety switch **402** may comprise male connector **406** for connecting to connector **403**, with connector **403** connected to conductor **404** which carries power generated by a first PV generator (not explicitly depicted). Similarly, safety switch **402** may comprise female connector **407** for connecting to connector **408**, with connector **408** connected to conductor **409** which

carries power generated by a second PV generator (not explicitly depicted). In some conventional photovoltaic systems, the first and second photovoltaic generators may be serially connected by connecting connector **403** to connector **408**. Safety switch **402** may be designed to seamlessly connect to connector **403** on one end and to connector **408** on the other end, adding safety-disconnect, control and/or monitoring features to a photovoltaic installation, either during construction of the installation or as a retrofit feature at a later time.

[0063] FIG. **4**A shows safety switch **402** along with connectors **408** and **403** prior to connecting, according to illustrative embodiments, while FIG. **4**B shows connection point **400** comprising safety switch **402** connected to connectors **408** and **403** (the component boundaries indicated by dashed lines).

[0064] In some embodiments, advantages may be obtained by integrating safety switch **402** into a photovoltaic generator connector or a PV generator junction box. For example, safety switch **402** may be built into connector **403** or connector **408** of a PV generator, providing safety switching functionality in a PV generator without necessitating additional components and connections. Integrating safety switches in PV generator connectors or junction boxes may reduce costs (e.g. by not requiring a separate enclosure and connectors for the safety switch) and simplify installation (since no additional components need be connected).

[0065] Reference is now made to FIG. **5**A, which shows part of a photovoltaic (PV) string featuring a safety switch according to illustrative embodiments. PV string **500** may be part of a string of PV generators **101** (e.g. part of a string similar to or the same as PV string **104** of FIG. **1**A, comprising generators similar to or the same as PV generators **101** of FIG. **1**A and FIG. **2**) connected to each other via connection points **400**. Connection points **400** may be similar to or the same as connection point **400** of FIG. **4**A and FIG. **4**B, and may include a safety switch (e.g. safety switch **402**) coupled in between two PV generator connectors (e.g. connectors **403** and **408**). Each PV generator **101** may comprise conductors **404** and **409** for carrying photovoltaic power from PV cells comprising the PV generator, and connectors **403** and **408** for connecting to safety switch **402**.

[0066] Reference is now made to FIG. **5**B, which illustrates a PV generator comprising a safety switch according to illustrative embodiments. PV generator **101** may comprise junction box **511** and conductors **404** and **409**. FIG. **5**B may illustrate the back side on a PV generator, with PV cells mounted on the front side of the PV generator (not explicitly shown). In some embodiments, PV cells may be mounted on both sides of the PV generator, or the back side of the PV generator may be constructed to allow solar irradiance to reach the PV cells from both sides of the PV generator. Junction box **511** may comprise electrical connections **512** and **513** for collecting photovoltaic power from the PV cells, and providing the photovoltaic power via conductors **409** and **404**.

[0067] In illustrative embodiments disclosed herein, safety switch **502** may be disposed between conductor **404** and electrical connection **512**. Safety switch **502** may be functionally similar or the same as safety switch **302** of FIG. **3**, without requiring the physical enclosure and connectors **306** and **307**. Transistor Q**1**, diode D**31**, sensor(s)/sensor interfaces **510**, controller **503**, communication device **505** and/or auxiliary power circuit **504** may be integrated in junction box **511**. In some embodiments, a resistor may be coupled across the terminals of transistor Q**1** (similarly to resistor R**31** of FIG. **3**) for regulating the OFF-state current through safety switch **502**. In some embodiments, auxiliary power circuit **504** may be coupled between conductors **404** and **409** for receiving photovoltaic power generated by PV generator **101**, and may provide power to controller **503**, communication device **505** and/or sensor(s)/sensor interfaces **510**.

[0068] In some embodiments, junction box **511** may further include an integrated PV power device similar to or the same as PV power device **903** of FIG. **9**. PV power device **903** may be coupled between conductors **404** and **409** and electrical connections **512** and **513**. For example, power converter **900** of FIG. **9** may receive power from electrical connections **512** and **513**, and may output power to conductors **404** and **409**. Safety switch **502** may be disposed between PV power device **903** and electrical connection **512**, or, in some embodiments, may be integrated into PV power device **903**.

[0069] Reference is now made to FIG. **6**, which shows a method for operating a safety switch (e.g. safety switch **102** of FIG. **1**A, safety switch **302** of FIG. **3**). Method **600** may be carried out by a controller similar to or the same as controller **303** of FIG. **3**. At step **601**, the initial condition may be that the switch is in the ON state, allowing current to flow between the two conductors coupled to the switch (e.g. conductors **404** and **409** of FIG. **5**A). During step **601**, an auxiliary power circuit coupled to the safety switch may provide power to the controller and/or a gate driver for maintaining the switch in the ON state (for example, some types of transistors implementing safety switches may be "normally OFF", in which case the auxiliary power circuit may power a voltage signal applied to a transistor gate node to maintain the ON state). At step **602**, the controller may receive a command to turn the switch to the OFF state. In some embodiments, the command may be received via a communication device (e.g. communication device **305**) in communication with a system control device. In some embodiments, at step **602**, instead of receiving a command to turn the switch to the OFF state, the controller may independently determine that an unsafe condition may be present (e.g. due to sensor reporting high current or temperature, or a sensor detecting a rapid change in current flowing through the switch, or based on comparing two electrical parameters and detecting a substantial mismatch) and determine that the switch should be turned to the OFF state. In some embodiments, a determination that the switch should be turned to the OFF state may be made in response to not receiving a signal. For example, in some illustrative systems, a system control device continuously provides a "keep alive" signal to associated safety switches and PV power devices. Not receiving a "keep alive" signal may indicate a potentially unsafe condition and may cause a determination that the switch should be turned to the OFF state.

[0070] Still referring to FIG. **6**, at step **603**, the controller turns the switch to the OFF state. In some embodiments (e.g. if the switch is a "normally ON" transistor), turning the switch to the OFF state may include applying a voltage to a transistor terminal, and in some embodiments (e.g. if the switch is a "normally OFF" transistor), turning the switch to the OFF state may include ceasing to apply a voltage to a transistor terminal. At step **604**, the controller waits to

receive a command to turn the switch back to the ON position. Generally, once an unsafe condition has been resolved, a system control device may provide a signal indicating that it is safe to reconnect PV generators and to resume providing power. In some embodiments, at step **604** the controller may independently determine that it is safe to return the switch to the ON position (e.g., due to a sensor reporting that the unsafe condition is no longer present).

[0071] At step **605**, the controller determines if a command (or, in some embodiments, a self-determination) to turn the switch to the ON state has been received. If no such command (or determination) has been received, the controller carrying out method **600** returns to step **604**. If a command (or, in some embodiments, a self-determination) to turn the switch to the ON state has been received, the controller carrying out method **600** proceeds to step **606**, turns the switch back to the ON state (e.g. by applying a voltage to a transistor node, or removing an applied voltage from a transistor node) and returns to step **601**.

[0072] An auxiliary circuit for providing continuous power supply to a safety switch according to embodiments disclosed herein may be variously implemented. Auxiliary power circuits may provide power for operating a safety switch under varying conditions and at various times. For example, auxiliary power circuits may provide operational power to a safety switch at three times: at initial startup (i.e. when the system comprising a safety switch is first deployed), at steady-state ON time (i.e. when the system is up and running, during normal operating conditions, when the switch is ON), and at steady-state OFF time (i.e. when the system is up and running, during a potentially unsafe condition, when the switch is OFF).

[0073] Reference is now made to FIG. **7**A, which illustrates a safety switch **702***a* comprising an auxiliary power circuit according to illustrative embodiments. Safety switch **702***a* may comprise conductors **708** and **709**, transistor Q**1**, controller **710** and auxiliary power circuit **704**. Safety switch **702***a* may further comprise a communication device similar to or the same as communication device **305** of FIG. **3** (not explicitly depicted, to reduce visual noise). Transistor Q**1** may be similar to or the same as transistor Q**1** described with regard to FIG. **3**, resistor R**31** may be the same as R**31** of FIG. **3**, diode D**31** may be the same as D**31** of FIG. **3**, controller **710** may be similar to or the same as controller **303** of FIG. **3**, and conductors **708** and **709** may be similar to or the same as conductors **308** and **309**, respectively, of FIG. **3**.

[0074] Auxiliary power circuit **704** may be coupled in parallel to transistor Q**1**. A first input of auxiliary power circuit **704** may be coupled to conductor **708**, and a second input of auxiliary power circuit **704** may be coupled to conductor **709**.

[0075] In some embodiments, auxiliary power circuit **704** may comprise analog circuitry configured to provide an appropriate control signal to transistor Q**1**. In some embodiments, auxiliary power circuit **704** may provide power to controller **710**, with controller **710** configured to provide a control signal to transistor Q**1**.

[0076] Reference is now made to FIG. **7**B, which illustrates a safety switch **702***b* comprising an auxiliary power circuit according to illustrative embodiments. Safety switch **702***b* may comprise conductors **708** and **709**, transistor Q**1**, controller **710** and auxiliary power circuit **714**. Safety switch **702***b* may further comprise a communication device similar to or the same as communication device **305** of FIG. **3** (not explicitly depicted, to reduce visual noise). Transistor Q**1** may be similar to or the same as transistor Q**1** described with regard to FIG. **3**, resistor R**31** may be the same as R**31** of FIG. **3**, diode D**31** may be the same as D**31** of FIG. **3**, controller **710** may be similar to or the same as controller **303** of FIG. **3**, and conductors **708** and **709** may be similar to or the same as conductors **308** and **309**, respectively, of FIG. **3**.

[0077] Auxiliary power circuit **714** may be coupled in series with transistor Q**1**. A first input of auxiliary power circuit **714** may be coupled to conductor **708**, and a second input of auxiliary power circuit **704***a* may be coupled to transistor Q**1**.

[0078] Reference is now made to FIG. **7**C, which depicts an auxiliary power circuit according to illustrative embodiments. Auxiliary power circuit **704***a* may be used as auxiliary power circuit **704** of FIG. **7**A. A first input to auxiliary power circuit **704***a* may be coupled to the source terminal of a transistor (e.g. Q**1** of FIG. **7**A), and a second input to auxiliary power circuit **704***a* may be coupled to the drain terminal of a transistor. An output of auxiliary power circuit **704***a* may be coupled to the gate terminal of a transistor. Auxiliary power circuit **704***a* may comprise Ultra Low Voltage Direct-Current to Direct Current (DC/DC) converter (ULVC) **720**. Controller **710** may be an analog or digital controller, and may be similar to controller **303** of FIG. **3**. Controller **710** may be integrated with or separate from auxiliary power circuit **304***a*. In some embodiments, an output of ULVC **720** may be coupled to an input of controller **710**, with controller **710** applying a voltage to the gate of a transistor. ULVC **720** may be configured to receive a very low voltage (e.g. tens or hundreds of millivolts) at its input, and output a substantially larger voltage (e.g. several volts). ULVC **720** may be variously implemented. In some embodiments, ULVC may comprise an oscillator charge pump and/or several conversion stages. Variations of illustrative circuits found in "0.18-V Input Charge Pump with Forward Body Biasing in Startup Circuit using 65 nm CMOS" (P. H. Chen et. al., ©IEEE 2010), "Low voltage integrated charge pump circuits for energy harvesting applications" (W.P.M. Randhika Pathirana, 2014) may be used as or as part of ULVC **720**.

[0079] Reference is now made to FIG. **7**D, which shows a timing diagram for operating auxiliary power circuit **704***a* of FIG. **7**C according to an illustrative embodiment. As a numerical example, auxiliary power circuit **704***a* may be coupled as described above to the terminals of a MOSFET. ULVC **720** may be coupled between the source (Vs) and drain (Vd) terminals of the MOSFET. When the MOSFET is in the OFF position, the voltage drop between terminals Vs and Vd may be substantial, e.g. close to the open-circuit voltage of a PV generator. When the MOSFET is in the OFF position, ULVC **720** may be bypassed or disabled, with the substantial voltage drop between terminals Vs and Vd processed to provide power to controller **710**. Controller **710** may hold the voltage between the MOSFET gate and source terminals to a low value, (e.g. 0V or 1V, under a minimum source-gate threshold of 2V), maintaining the MOSFET in the OFF position.

[0080] Still referring to FIG. **7**D, controller **710** may receive a command via a communication circuit (not explicitly depicted) to turn the MOSFET to the ON state. Controller **710** may increase the gate-to-source voltage to about

5V. In illustrative PV systems, the current flowing through a PV string at certain points of operation may be about 10 A. At a gate-to-source voltage of 5V and drain-to-source current of 10 A, the drain-to-source voltage may be about 90 mV. ULVC **720** may boost the drain-to-source voltage of 90 mV to a voltage of several volts or more (e.g. 5V, 10V, 12V or 20V) for powering controller **710**. Controller **710** may continuously hold the gate-to-source voltage at about 5V until a command is received to turn the MOSFET OFF. In some embodiments, the MOSFET is turned OFF at the end of every day, i.e. when PV generators cease producing significant power due to nightfall. When it is time to turn the MOSFET OFF, controller may decrease the gate-to-source voltage back to about 0V or 1V.

[0081] Operating auxiliary power circuit **704***a* according to the illustrative timing diagrams of FIG. **7**D may provide several advantages. For example, the steady-state power consumed by safety switch **702***a* using auxiliary power circuit **704***a* may be low, in this illustrative example, 90 mV*10 A=900 mW when in the ON position, and 30V*10 uA=0.3 mW when in the OFF position. Furthermore, the steady-state voltage across safety switch **702***a* may be substantially constant when in the ON position (e.g. 90 mV).

[0082] Reference is now made to FIG. **7**E, which depicts an auxiliary power circuit according to illustrative embodiments. Auxiliary power circuit **704***b* may be used as auxiliary power circuit **704** of FIG. **7**A. A first input to auxiliary power circuit **704***b* may be coupled to the source terminal of a transistor (e.g. Q**1** of FIG. **7**A), and a second input to auxiliary power circuit **704***b* may be coupled to the drain terminal of a transistor. An output of auxiliary power circuit **704***b* may be coupled to the gate terminal of a transistor. Auxiliary power circuit **704***b* may comprise capacitor C**2**, diode D**2**, diode Z**2**, transistor Q**70** and DC-to-DC converter **721**. In some embodiments, capacitor C**2** may be replaced by a different charge device (e.g. a battery). Controller **710** may be analog or digital, and may be similar to controller **303** of FIG. **3**. Controller **710** may be integrated with or separate from auxiliary power circuit **304***a*. Diode Z**2** may be a Zener diode designed to limit and hold a reverse-bias voltage to a predetermined value. In this illustrative embodiment, diode Z**2** is assumed to have a reverse-bias voltage of 4V. A first input to auxiliary power circuit **704***b* may be coupled to the source terminal of a transistor (e.g. Q**1** of FIG. **7**A), and a second input to auxiliary power circuit **704***b* may be coupled to the drain terminal of a transistor (e.g. Q**1**). An output of auxiliary power circuit **704***b* may be coupled to the gate terminal of a transistor (e.g. Q**1**). In some embodiments, an output of converter **721** may be coupled to an input of controller **710**, with controller **710** applying a voltage to the gate of a transistor. Converter **721** may be configured to receive a voltage of several volts (e.g. between 3V-10V) at its input, and output a voltage for powering controller **710** or controlling the gate voltage of a transistor gate terminal.

[0083] The anode of diode D**2** may be coupled to a transistor drain terminal (Vd), and the cathode of diode D**2** may be coupled to the cathode of diode Z**2** and a first terminal of capacitor C**2**. The anode of diode Z**2** may be coupled to a drain terminal of transistor Q**70**, with the source terminal of transistor Q**70** coupled to a transistor source terminal (Vs) and to a second terminal of capacitor C**2**. The gate voltage of transistor Q**70** may be controlled by controller **710** (the control line is not explicitly depicted). The inputs of converter **721** may be coupled in parallel with capacitor C**2**.

[0084] Auxiliary power circuits **704***a-b* and **714** may be operated to provide a voltage drop across the terminals of safety switch **702** according to safety and effective system operation requirements. The drain-to-source voltage may be desired to be low during normal system operation, when safety switch **702** is in the "steady ON state", i.e. when the switch provides a low-impedance path for photovoltaic power to flow through a PV string. When safety switch **702** is in a "steady OFF state", safety switch **702** may be required to provide a drain-to-source voltage of about an open-circuit voltage of a PV generator without providing a low-impedance path for current flow.

[0085] Referring back to FIG. **7**E, controller **710** may operate transistor Q**70** and transistor Q**1** of FIG. **7**A to provide a voltage drop across the terminals of safety switch **702** according to safety and effective system operation requirements. In the "steady OFF state", transistors Q**1** and Q**70** may be held in the OFF state. In the "steady ON state" transistor Q**1** may be ON, providing a low impedance path between the drain and source terminals, and transistor Q**70** may be either ON or OFF. It may be desirable during the "steady ON state" to temporarily move Q**1** to the "temporarily OFF state" for a short period of time, to allow capacitor C**2** to recharge and continue providing operational power to controller **710**. In the "temporarily OFF" state, transistor Q**1** may be OFF and transistor Q**70** may be ON. Diode Z**2** may provide a limited charging voltage (e.g. 4V) across the terminals of capacitor C**2**, with capacitor C**2** providing a current path for the current of a PV string.

[0086] Reference is now made to FIG. **7**F, which shows a timing diagram for operating auxiliary power circuit **704***b* of FIG. **7**E according to an illustrative embodiment. As a numerical example, auxiliary power circuit **704***a* may be coupled as described above to the terminals of a MOSFET. Converter **721** may be coupled between the source (Vs) and drain (Vd) terminals of the MOSFET. When the MOSFET is in the steady-OFF-state, the voltage drop between terminals Vs and Vd may be substantial, e.g. close to the open-circuit voltage of a PV generator. When the MOSFET is in the steady-OFF-state, converter **721** may be bypassed or disabled, with the substantial voltage drop between terminals Vs and Vd processed to provide power to controller **710**. In some embodiments, when the MOSFET is in the steady-OFF-state, converter **721** may process the drain-to-source voltage to provide power to controller **710**. Controller **710** may hold the voltage between the MOSFET gate terminal and source terminals to a low value, (e.g. 0V or 1V, under a minimum source-gate threshold of 2V), maintaining the MOSFET in the OFF position. When the MOSFET is in the steady-OFF-state, capacitor C**2** may be charged to about the voltage between the drain and source terminals. In some embodiments, diode Z**2** may be disconnected (e.g. by turning Q**70** to the OFF state), to increase the drain-to-source voltage when the MOSFET is in the steady-OFF-state. In some embodiments, having a large drain-to-source voltage (e.g. about the same voltage as a PV generator open-circuit voltage) when the MOSFET is in the steady-OFF-state increases system safety by decreasing the total voltage across a PV generator and an accompanying safety switch.

[0087] Still referring to FIG. **7**F, controller **710** may receive a command via a communication circuit (not explic-

itly depicted) to turn the MOSFET to the ON state. Controller **710** may increase the gate-to-source voltage of Q**1** to about 6V. In illustrative PV systems, the current flowing through a PV string at certain points of operation may be about 10 A. At a gate-to-source voltage of 6V and drain-to-source current of 10 A, the drain-to-source voltage may be about 65 mV. Diode D**2** might not be forward biased (e.g., if diode has a forward voltage of 0.6V, a drain-to-source voltage of 65 mV might not forward-bias diode D**2**), disconnecting capacitor C**2** from the drain terminal. Capacitor C**2** may slowly discharge by providing power to converter **721**. Converter **721** may include circuitry (e.g. analog comparators) to monitor the voltage across capacitor C**2**, and may respond to the voltage across capacitor C**2** falling below a first threshold. If the voltage across capacitor falls below the first threshold, controller **710** may reduce the gate-to-source voltage to about 0V or 1V, resulting in the MOSFET moving to the OFF state. Diode D**2** may then become forward-biased, and diode Z**2** may limit the drain-to-source voltage to a second threshold. Transistor Q**70** may be held in the ON state, allowing diode Z**2** to regulate the drain-to-source voltage. Capacitor C**2** may then be rapidly charged back to about the voltage level of the second threshold, with controller **710** configured to increase the gate-to-source voltage back to 6V when capacitor C**2** reaches the second threshold voltage. This iterative process may repeat itself while the MOSFET is operating in a "steady ON state" mode. In the illustrative embodiment illustrated in FIG. **7**F, the first threshold is 2V, and the second threshold is 4V. The voltage across capacitor C**2** varies between the two levels, with the gate-to-source voltage alternating between about 0V and about 6V, and the drain-to-source voltage alternating between 4V and 65 mV.

[0088] Operating auxiliary power circuit **704***b* according to the illustrative timing diagrams of FIG. **7**F may provide several advantages. For example, a converter designed to receive an input voltage between 2-30V (e.g. converter **721**) may be cheap, efficient and easy to implement. In some embodiments, additional zener diodes may be coupled in series with diode Z**2**, increasing the first voltages. Increasing the first threshold voltage (e.g. to 10V, 15V or 20V, respectively) may provide advantages such as decreasing the frequency of charge-discharge cycles over capacitor C**2**, and may provide a voltage to converter **721** which may be easier to process.

[0089] It is to be understood that illustrative operating points comprising MOSFET drain-to-source voltages of 65 mV and 90 mV, MOSFET gate-to-source voltages of 5V and 6V, and MOSFET drain-to-source currents of **10**A are used for illustrative purposes and are not intended to be limiting of operating points used in conjunction with illustrative embodiments disclosed herein. In some embodiments, multiple MOSFET transistors may be parallel-coupled to reduce ON-state resistance, thereby reducing the drain-to-source voltage across MOSFETs when in the ON state. For example, coupling five MOSFETs in parallel may reduce a drain-to-source ON-state voltage from 65 mV to 15 mV.

[0090] Reference is now made to FIG. **7**G, which depicts an auxiliary power circuit according to illustrative embodiments. Auxiliary power circuit **704***c* may be used as auxiliary power circuit **704** of FIG. **7**A. Auxiliary power circuit **704***c* may be similar to auxiliary power circuit **704***b*, with a modification in that the anode of diode Z**2** is coupled to the drain terminal of transistor Q**1** (Vs), and that the drain terminal of transistor Q**70** is also coupled to the source terminal of transistor Q**1** (Vs). When safety switch **702** is in the "steady ON state", transistors Q**1** and Q**70** may be ON, providing a low impedance path for PV string current. When safety switch **702** is in the "steady OFF state", transistors Q**1** and Q**70** may be OFF, preventing a low impedance path for a PV string current, and providing a substantial voltage drop across the terminals of safety switch **702** (e.g. about the same voltage or a slightly lower voltage than a PV-generator open-circuit voltage). When safety switch **702** is in the "temporarily OFF state", transistor Q**1** may be OFF and transistor Q**70** may be ON, diode Z**2** providing a charging voltage to capacitor C**2** and Q**70** providing a low-impedance current path for a PV string current.

[0091] Reference is now made to FIG. **7**H, which illustrates a safety switch comprising an auxiliary power circuit according to illustrative embodiments. Safety switch **702***c* may comprise conductors **708** and **709**, transistor Q**1**, controller **710** and auxiliary power circuit **715**. Auxiliary power circuit **715** may be used auxiliary power circuit **714** of FIG. **7**B. In this illustrative embodiment, auxiliary power circuit **715** may double as a power line communication (PLC) device. Inductor L**4**, capacitor C**3** and resistor R may be coupled in parallel, with a first node of inductor L**4** coupled to conductor **708**, and a second node of inductor L**4** coupled to the source terminal of transistor Q**1**. The values of inductor L**4** and capacitor C**3** may be selected to resonate at a resonant frequency (e.g. 60 kHz).

[0092] Still referring to FIG. **7**H, an external device (e.g. system power device **110** of FIG. **1**) may transmit a PLC high-frequency alternating current signal (e.g. using frequency shift keying, amplitude modulation or other modulation schemes) over conductor **708**. The PLC signal may induce a high-frequency alternating-current voltage drop across the terminals of resistor R, with diode D**7** providing a voltage to controller **710** when the voltage across resistor R is positive (i.e. the voltage at conductor **708** is higher than the voltage at the source terminal of transistor Q**1**). In some embodiments, diode D**7** may be replaced by a "full bridge" of diodes providing a voltage to controller **710** when the voltage across R is nonzero (either positive or negative). In some embodiments, the PLC-induced voltage across resistor R may serve a dual purpose. The PLC signal may provide operational information to controller **710** by varying the voltage drop across resistor R. Additionally, in some embodiments, the PLC signal may provide operational power to controller **710**. Controller **710** may draw power from the resonant circuit comprising resistor R, capacitor C**3** and inductor L**4**, and use the drawn power to set the state of transistor Q**1**.

[0093] Implementing auxiliary power circuit **715** as illustrated in FIG. **7**H may provide certain advantages. For example, auxiliary power circuit **715** of FIG. **7**H may double as a communication device, reducing the total component count in safety switch **702***c*. Furthermore, integrating control and power signals may reduce the complexity required to program controller **710**. For example, an 'ON' signal may be broadcast by a system controller at a high power, and an 'OFF' signal may be broadcast by a system controller at low power. Auxiliary power circuit **715** may directly apply the converted power signal to the gate of transistor Q**1**, wherein the power of the 'ON' signal may be sufficient to hold Q**1** in the ON state, and the power of the 'OFF' signal might not be sufficient to hold Q**1** in the ON state.

[0094] Elements of auxiliary power circuits **704***a*, **704***b* and **715** may be variously combined. For example, auxiliary power circuit **714** of FIG. **7**B may be added to safety switch **702***a* of FIG. **7**A, auxiliary power circuit **714** functioning as a PLC circuit as well as being configured to provide power to controller **710** in case of a malfunction in auxiliary power circuit **704**. In some embodiments, auxiliary power circuit **714** may provide initial power to controller **710** at system setup, with auxiliary power circuit **704** providing power to controller **710** during "steady state" operation.

[0095] Reference is now made to FIG. **7**I, which illustrates part of a MOSFET datasheet according to an illustrative embodiment. Plot **770** may depict relationships between drain-to-source voltage and drain-to-source current through a MOSFET. Curve **771** may depict a current-voltage relationship when the gate-to-source voltage applied to a MOSFET is 5V. Curve **771** may depict a current-voltage relationship when the gate-to-source voltage applied to a MOSFET is 6V. Operating point A may indicate that when a gate-to-source voltage applied to a MOSFET is 6V and the drain-to-source current flowing through the MOSFET is 10 A, the drain-to-source voltage across the MOSFET is about 65 mV. This may correspond to a possible operating point for a MOSFET operated according to FIG. **7**F. Operating point B may indicate that when a gate-to-source voltage applied to a MOSFET is 5V and the drain-to-source current flowing through the MOSFET is 10 A, the drain-to-source voltage across the MOSFET is about 90 mV. This may correspond to a possible operating point for a MOSFET operated according to FIG. **7**D. As noted above, these operating points are illustrative only, and may adapted by connected multiple MOSFETs in parallel to obtain new operating points.

[0096] Reference is now made to FIG. **8**, which shows a photovoltaic (PV) system according to illustrative embodiments. PV system **800** may comprise a plurality of PV strings **804** coupled in parallel between a ground bus and a power bus. Each of PV strings **804** may comprise a plurality of photovoltaic generators **801**, a plurality of safety switches **802** and a plurality of PV power devices **803**. PV generators **801** may be similar to or the same as PV generators **101** of FIG. **1**A, and safety switches **802** may be similar to or the same as safety switch **102** of FIG. **1**A, safety switch **302** of FIG. **3** and/or safety switches **702***a*-**702***c* of FIGS. **7**A-**7**C.

[0097] In some embodiments, the power and ground buses may be input to system power device **810**. In some embodiments, system power device **810** may include a DC/AC inverter and may output alternating current (AC) power to a power grid, home or other destinations. In some embodiments, system power device **810** may comprise a combiner box, transformer and/or safety disconnect circuit. For example, system power device **810** may comprise a DC combiner box for receiving DC power from a plurality of PV strings **804** and outputting the combined DC power. In some embodiments, system power device **810** may include a fuse coupled to each PV string **804** for overcurrent protection, and/or one or more disconnect switches for disconnecting one or more PV strings **804**. In some embodiments, system power device **810** may comprise a system controller (e.g. a Digital Signal Processor (DSP), Application-Specific Integrated Circuit (ASIC) and/or a Field Programmable Gate Array (FPGA)) for providing commands to and receiving data from PV power devices **803** and safety switches **802**.

[0098] Each safety switch **802** may be coupled between a first output of a first PV generator and a second output of a second output generator, and each PV power device may have two input terminals: a first input terminal coupled to the second output of the first PV generator, and a second input terminal coupled to the first output of the second PV generator. In this "two-to-one" arrangement, each pair of PV generators **801** are effectively coupled in series, with the combined voltage and power of the two PV generators provided to the input of PV power device **803**. Each safety switch **802** is disposed between the two PV generators, for disconnecting the pair of PV generators in case of a potentially unsafe condition.

[0099] Some conventional PV installations feature a similar arrangement, with each pair of PV generators **801** directly connected to each other without a safety switch disposed in between the generators. In case of an unsafe condition, a PV power device **803** may stop drawing power from the PV generators, resulting in an open-circuit voltage at the PV power device input terminals which is about double the open-circuit voltage of each PV power generator. This voltage may, in some systems, be as high as 80, 100 or even 120 volts, which may be higher than the allowed safe voltage defined by safety regulations.

[0100] By operating safety switches **802** according to apparatuses and methods disclosed herein, in case of an unsafe condition (e.g. detected by system power device **810**, a PV power device **803** and/or a safety switch **802**), one or more safety switches **802** may move to the OFF state, reducing the voltage drop between the input terminals of each PV power device **803** to about 40-60 volts, which may be an adequately safe voltage level.

[0101] Each PV power device **803** may receive power from two photovoltaic generators **801** coupled to the inputs of PV power device **803**, and may provide the combined power of the two photovoltaic generators at the outputs of PV power device **803**. The outputs of a plurality of PV power devices **803** may be coupled in series to form a PV string **804**, with a plurality of PV strings **804** coupled in parallel to provide power to system power device **810**.

[0102] While FIG. **8** illustrates an arrangement wherein two PV generators **801** are coupled in parallel to each PV power device **803**, various arrangements can be easily obtained. For example, each PV power device receive power from three or more serially-connected PV generators **801**, with safety switches **802** disposed between the PV generators. In some embodiments, some PV power devices **803** may receive power from a single PV generator **801**, some PV power devices may receive power from two PV generators **801**, and some PV power devices may receive power from more than two PV generators **801**. In some embodiments, PV power devices **803** may receive power from multiple parallel-connected serial strings of PV generators **801**, with safety switches **802** disposed in the serial strings. Embodiments disclosed herein include the aforementioned modifications, and other modifications which will be evident to one of ordinary skill in the art.

[0103] Reference is now made to FIG. **9**, which illustrates circuitry which may be found in a power device such as power device **903**, according to an illustrative embodiment. PV power device **903** may be similar to or the same as PV power device **803** of FIG. **8**. In some embodiments, PV power device **903** may include power converter **900**. Power converter **900** may comprise a direct current-direct current

(DC/DC) converter such as a Buck, Boost, Buck/Boost, Buck+Boost, Cuk, Flyback and/or forward converter. In some embodiments, power converter **900** may comprise a direct current alternating current (DC/AC) converter (also known as an inverter), such a micro-inverter. Power converter **900** may have two input terminals and two output terminals, which may be the same as the input terminals and output terminals of PV power device **903**. In some embodiments, PV power device **903** may include Maximum Power Point Tracking (MPPT) circuit **906**, configured to extract increased power from a power source the power device is coupled to. In some embodiments, power converter **900** may include MPPT functionality. In some embodiments, MPPT circuit **906** may implement impedance matching algorithms to extract increased power from a power source the power device is coupled to Power device **903** may further comprise controller **905** such as a microprocessor, Digital Signal Processor (DSP), Application-Specific Integrated Circuit (ASIC) and/or a Field Programmable Gate Array (FPGA).

[0104] Still referring to FIG. **9**, controller **905** may control and/or communicate with other elements of power device **903** over common bus **920**. In some embodiments, power device **903** may include circuitry and/or sensors/sensor interfaces **904** configured to measure parameters directly or receive measured parameters from connected sensors and/or sensor interfaces **904** configured to measure parameters on or near the power source, such as the voltage and/or current output by the power source and/or the power output by the power source. In some embodiments the power source may be a PV generator comprising PV cells, and a sensor or sensor interface may directly measure or receive measurements of the irradiance received by the PV cells, and/or the temperature on or near the PV generator.

[0105] Still referring to FIG. **9**, in some embodiments, power device **903** may include communication device **911**, configured to transmit and/or receive data and/or commands from other devices. Communication device **911** may communicate using Power Line Communication (PLC) technology, or wireless technologies such as ZigBee™, Wi-Fi, cellular communication or other wireless methods. In some embodiments, power device **903** may include memory device **909**, for logging measurements taken by sensor(s)/sensor interfaces **904** to store code, operational protocols or other operating information. Memory device **909** may be flash, Electrically Erasable Programmable Read-Only Memory (EEPROM), Random Access Memory (RAM), Solid State Devices (SSD) or other types of appropriate memory devices.

[0106] Still referring to FIG. **9**, in some embodiments, PV power device **903** may include safety devices **907** (e.g. fuses, circuit breakers and Residual Current Detectors). Safety devices **907** may be passive or active. For example, safety devices **907** may comprise one or more passive fuses disposed within power device **903** and designed to melt when a certain current flows through it, disconnecting part of power device **903** to avoid damage. In some embodiments, safety devices **907** may comprise active disconnect switches, configured to receive commands from a controller (e.g. controller **905**, or an external controller) to disconnect portions of power device **903**, or configured to disconnect portions of power device **903** in response to a measurement measured by a sensor (e.g. a measurement measured or obtained by sensors/sensor interfaces **904**). In some embodiments, power device **903** may comprise auxiliary power circuit **908**, configured to receive power from a power source coupled to power device **903**, and output power suitable for operating other circuitry components (e.g. controller **905**, communication device **911**, etc.). Communication, electrical coupling and/or data-sharing between the various components of power device **903** may be carried out over common bus **920**.

[0107] Still referring to FIG. **9**, in some embodiments, PV power device **903** may comprise transistor Q**9** coupled between the inputs of power converter **900**. Transistor Q**9** may be controlled by controller **905**. If an unsafe condition is detected, controller **905** may set transistor Q**9** to ON, short-circuiting the input to power converter **900**. Transistor Q**9** may be controlled in conjunction with safety switch **802** of FIG. **8**. When safety switch **802** and transistor Q**9** are OFF, each pair of PV generators **801** of FIG. **8** are disconnected, each PV generator providing an open-circuit voltage at its output terminals. When safety switch **802** and transistor Q**9** are ON, each pair of PV generators **801** of FIG. **8** are connected and short-circuited, the pair of PV generators providing a voltage of about zero to power converter **900**. In both scenarios, a safe voltage at all system locations may be maintained, and the two scenarios may be staggered to alternate between open-circuiting and short-circuiting PV generators. This mode of operation may allow continuous power supply to system control devices, as well as provide backup mechanisms for maintaining a safe voltage (i.e. in case a safety switch **802** malfunctions, operation of transistor Q**9** may allow continued safe operating conditions).

[0108] Reference is now made to FIG. **10**, which shows a photovoltaic (PV) system according to illustrative embodiments. PV system **1000** may comprise a plurality of PV strings **1004** coupled in parallel between a ground bus and a power bus. Each of PV strings **1004** may comprise a plurality of photovoltaic generators **1001** and a plurality of PV power devices **1003**. PV generators **1001** may be similar to or the same as PV generators **801** of FIG. **8**. In some embodiments, the power and ground buses may be input to system power device **1010**, which may be similar to or the same as system power device **810** of FIG. **8**.

[0109] Each of photovoltaic power devices **1003** may comprise four input terminals: T**1**, T**2**, T**3** and T**4**. T**1** and T**2** may be coupled to and receive power from a first PV generator, and T**3** and T**4** may be coupled to and receive power from a second PV generator. In some embodiments, PV power device **1003** may be substantially the same as PV power device **803** of FIG. **8**, with the addition of safety switch **802** integrated into PV power device **1003** and connected in between terminals T**2** and T**3** of PV power device **1003**.

[0110] Reference is now made to FIG. **11**A, which shows a photovoltaic power device according to illustrative embodiments. PV power device **1103***a* may be used as PV power device **1003** of FIG. **10**. PV power device **1103***a* may comprise a PV power device similar to or the same as PV power device **803** of FIG. **8** or PV power device **903** of FIG. **9**. For convenience, in the illustrative embodiments of FIG. **11**A and FIG. **11**B, PV power device **1103***a* will be assumed to comprise PV power device **903** of FIG. **9**.

[0111] PV power device **1103***a* may comprise transistors Q**3**, Q**4** and Q**5**. Transistors Q**3**-Q**5** may be MOSFETs, JFETs, IGBTs, BJTs or other appropriate transistors. For the illustrative embodiment of FIG. **11**A, transistors Q**3**-Q**5** will be assumed to be MOSFETs. Transistor Q**3** may be con-

nected between input terminals T**2** and T**3**. Transistor Q**4** may be connected between input terminals T**2** and T**4**. Transistor Q**1** may be connected between input terminals T**1** and T**3**. Transistors Q**3**-Q**5** may be controlled (e.g. have gate signals provided) by one or more controllers such as controller **905** of PV power device **903**. The elements comprising PV power device **1103***a* may be jointly enclosed by enclosure **1108**.

[0112] A first PV generator (not explicitly depicted) may be coupled between terminals T**1** and T**2**, and a second PV generator (not explicitly depicted) may be coupled between terminals T**3** and T**4**. Under normal operating conditions, transistor Q**3** may be ON, and transistors Q**4** and Q**5** may be OFF. Under these conditions, the two photovoltaic generators may be serially connected, with the combined serial voltage of the two PV generators provided between terminals T**1** and T**4**. When a potentially unsafe condition is detected, the controller controlling transistor Q**3** may turn Q**3** to the OFF state, reducing the voltage drop between terminals T**1** and T**4**.

[0113] Even when transistor Q**3** is OFF, power may still be provided at the input to PV power device **903**. For example, in some embodiments, controller(s) controlling transistors Q**4** and Q**5** may switch Q**4** and Q**5** to the ON state when Q**3** is OFF, resulting in terminal T**1** being short-circuited to terminal T**3**, and terminal T**2** being short-circuited to terminal T**4**. Under these conditions, the first and second photovoltaic generator may be coupled in parallel between terminal T**1** and T**4**, allowing PV power device **903** to draw power from the PV generators (e.g. for powering devices such as controller **905**, communication device **911**, auxiliary power circuit **908** and other devices depicted in FIG. **9**). In some embodiments, Q**4** or Q**5** might not be included in PV power device **1103***a*. For example, Q**4** might not be included, in which case by turning Q**5** to the ON position when Q**3** is OFF, power is provided to PV power device **903** by a single PV generator (coupled between T**3** and T**4**). Similarly, Q**5** might not be included, in which case by turning Q**4** to the ON position when Q**3** is OFF, power is provided to PV power device **903** by a single PV generator (coupled between T**1** and T**2**).

[0114] Reference is now made to FIG. **11**B, which shows a photovoltaic power device according to illustrative embodiments. PV power device **1103***b* may be used as PV power device **1003** of FIG. **10**. PV power device **1103***b* may comprise a PV power device similar to or the same as PV power device **803** of FIG. **8** or PV power device **903** of FIG. **9**. For convenience, in the illustrative embodiments of FIG. **11**A and FIG. **11**B, PV power device **1103***a* will be assumed to comprise PV power device **903** of FIG. **9**.

[0115] Transistor Q**6** may be similar to or the same as transistor Q**3** of FIG. **11**A. PV power device **1103***b* may further comprise diodes D**3** and D**4**. The anode of diode D**3** may be coupled to terminal T**3** and the cathode of diode D**3** may be coupled to the positive input of PV power device **903** at node N**1**. The anode of diode D**4** may be coupled to terminal T**1** and the cathode of diode D**3** may be coupled to the positive input of PV power device **903** at node N**1**. The elements comprising PV power device **1103***b* may be jointly enclosed by enclosure **1108**.

[0116] Still referring to FIG. **11**B, a first PV generator (not explicitly depicted) may be coupled between terminals T**1** and T**2**, and a second PV generator (not explicitly depicted) may be coupled between terminals T**3** and T**4**. Under normal operating conditions, transistor Q**3** may be ON, connecting terminals T**2** and T**3**. The voltage at terminal T**1** may be higher than the voltage at terminal T**2** (e.g. if the positive output of a PV generator is coupled to terminal T**1** and the negative output of the PV generator is coupled to terminal T**2**), so diode D**4** may be forward-biased and diode D**3** may be reverse-biased. The voltage at node N**1** may be about the voltage at terminal T**1** (assuming an insignificant voltage drop across diode D**4**), resulting in a voltage input to PV power device **903** about equal to the voltage between terminals T**1** and T**4**.

[0117] When a potentially unsafe condition is detected, the controller controlling transistor Q**6** may turn Q**6** to the OFF state, disconnecting the coupling of terminals T**2** and T**3**. The voltage at node N**1** may be the voltage at terminal T**1** or the voltage at terminal T**3**, the greater of the two. While the voltage at node N**1** might not be predetermined, in either possible scenario, a PV generator may be coupled to the inputs of PV power device **903**, providing power to PV power device **903** (e.g. for powering devices such as controller **905**, communication device **911**, auxiliary power circuit **908** and other devices depicted in FIG. **9**).

[0118] Reference is now made to FIG. **12**, which shows a photovoltaic (PV) system according to illustrative embodiments. PV system **1200** may comprise a plurality of PV strings **1204** coupled in parallel between a ground bus and a power bus. Each of PV strings **1204** may comprise a plurality of photovoltaic generators **1201**, a plurality of safety switches **1202** and a plurality of PV power devices **1203**. PV generators **1001** may be similar to or the same as PV generators **801** of FIG. **8**. In some embodiments, the power and ground buses may be input to system power device **1210**, which may be similar to or the same as system power device **810** of FIG. **8**.

[0119] Each PV power device **1203** may be designed to be coupled to more than one PV power generator **1201**. For example, in PV system **1200**, each PV power device **1203** (except for the PV power devices coupled to the power bus) is coupled to two PV power generators and to two safety switches **1202**, with each safety switch **1202** (except for the safety switch **1202** which is coupled to the ground bus) coupled to two PV generators **1201** and two PV power devices **1203**.

[0120] Under normal operating conditions, each PV power device **1203** may receive power from two PV generators **1201**, and may forward the power along PV string **1204** towards the power bus. Under normal operating conditions, each safety switch **1202** may provide a connection between two PV generators **1201** and may provide a connection between two PV power devices **1203** for forwarding power along PV string **1204**. For example, under normal operating conditions, safety switch **1202***a* provides a connection between PV generators **1201***a* and **1201***b*. PV power device **1203***a* may receive power generated by PV generators **1201***a* and **1201***b*, with safety switches **1202***b* disposed between PV power devices **1203***a* and **1203***b*, providing PV power device **1203***a* with a connection for forwarding power to PV power device **1203***b*. Similarly, safety switch **1202***b* provides a connection between PV generators **1201***c* and **1201***d*, with PV power device **1203***b* receiving power from PV generators **1201***c* and **1201***d*.

[0121] In case of an unsafe condition, safety switch **1202***a* may be operated to disconnect PV generator **1201***a* from PV generator **1201***b*, and to disconnect PV power device **1203***a*

from the ground bus. Similarly, safety switch **1202***b* may be operated to disconnect PV generator **1201***c* from PV generator **1201***d*, and to disconnect PV power device **1203***a* PV power device **1203***b*. Operating safety switches **1202** in this manner may reduce the voltage in various locations in PV system **1200** to safe voltage levels.

[0122] Reference is now made to FIG. **13**A, which shows safety switch **1205** according to an illustrative embodiment. Safety switch **1205** may comprise terminals T**1**-T**4**, transistors (e.g. MOSFETs) Q**7** and Q**8**, capacitors C**4** and C**5**, and inductors L**4** and L**5**. Inductor L**4** may be provided between terminal T**3** and terminal T**1** to reduce ripples and/or spikes in a current flowing from terminal T**1** to terminal T**3**, and inductor L**5** may be provided between terminal T**4** and midpoint node X to reduce ripples and/or spikes in a current flowing from transistor Q**7** to terminal T**4**. In some embodiments, inductors L**4** and L**5** might not be provided. In some embodiments, transistors Q**7** and Q**8** may be replaced by alternative switching elements, such as IGBTs, BJTs, JFETs or other switching elements. Capacitor C**4** may be coupled between terminals T**1** and T**2**. Transistor Q**7** may be coupled between terminal T**2** and midpoint node X, and capacitor C**5** may be coupled between terminal T**1** and midpoint node X. Transistor Q**8** may be coupled in parallel to capacitor C**5**, between terminal T**1** and midpoint node X. In some embodiments, capacitor C**5** and/or capacitor C**4** might not be provided.

[0123] During normal system operation, transistor Q**7** may be held in the ON state, and transistor Q**8** may be in the OFF state. Capacitor C**5** may then be in parallel with capacitor C**4**, and a first PV generator may be coupled between terminals T**1** and T**2**, applying a voltage to capacitors C**4** and C**5** and providing electrical power at terminals T**1** and T**2**. Terminal T**4** may be coupled to an output terminal of a second PV generator, and terminal T**3** may be coupled to an input terminal of a PV power device **1203**. The power input to safety switch **1205** at terminals T**1** and T**2** may be output at terminals T**3** and T**4** to the second PV generators and the PV power device **1203**.

[0124] Transistors Q**7** and Q**8** may be controlled by a controller (not explicitly depicted) similar to or the same as controller **710** of FIG. **7**A. In some embodiments, the controller may be powered by capacitor C**4** (e.g. a controller input power terminal may be coupled to terminal T**2** or terminal T**1** for receiving power from capacitor C**4**). Safety switch **1205** may further comprise a communication device (e.g. similar to or the same as communication device **305** of FIG. **3**) for receiving operational commands from a system control device.

[0125] When an unsafe condition is detected, the controller may switch transistor Q**7** to the OFF state and transistor Q**8** to the ON state. Capacitor C**5** may be short-circuited by transistor Q**8**, while capacitor C**4** may maintain the voltage imposed between terminals T**1** and T**2**.

[0126] Reference is now made to FIG. **13**B, which shows some of the internal circuitry of a photovoltaic power device according to one illustrative embodiment. In some embodiments, PV power device **1203** may comprise a variation of a Buck+Boost DC/DC converter. The power device may include a circuit having two input terminals, denoted Vin and common, and two output terminals which output the same voltage Vout. The output voltage is in relation to the common terminal. The circuit may include an input capacitor Cin coupled between the common terminal and the Vin terminal, an output capacitor coupled between the common terminal and the Vout terminals. The circuit may include two central points used for reference. The circuit may include a plurality of switches (e.g. MOSFET transistors) Q**11**, Q**12**, Q**13** and Q**14** with Q**11** connected between Vin and the first central point, and Q**12** connected between the common terminal and the first central point. Q**13** may be connected between the Vout terminal and the second central point, and Q**14** may be connected between the common terminal and the second central point. The circuit may further include inductor L**6** coupled between the two central points.

[0127] The operation of the Buck+Boost DC/DC converter in PV power device **1203** may be variously configured. If an output voltage lower than he input voltage is desired, Q**13** may be statically ON, Q**14** may be statically OFF, and with Q**11** and Q**12** being Pulse-Width-Modulation (PWM)-switched in a complementary manner to one another, the circuit is temporarily equivalent to a Buck converter and the input voltage is bucked. If an output voltage higher than he input voltage is desired, Q**11** may be statically ON, Q**12** may be statically OFF, and with Q**13** and Q**14** being PWM-switched in a complementary manner to one another, the input voltage is boosted. Staggering the switching of switches Q**11** and Q**12**, the circuit may convert the input voltage Vin to output voltage Vout. If current is input to the circuit by the Vin and common terminals, and the voltage drop across capacitors Cin and Cout are about constant voltages Vin and Vout respectively, the currents input to the circuit are combined at inductor L**6** to form an inductor current which is equal to the sum of the current input at the Vin and common terminals. The inductor current may contain a ripple due to the charging and discharging of capacitors Cin and Cout, but if the voltage drop across capacitors Cin and Cout are about constant, the voltage ripples over the capacitors are small, and similarly the inductor current ripple may be small. The inductor current may be output by the pair of output terminals Vout. In some embodiments, a single output terminal may be included, and system designers may split the output terminal externally (i.e. outside of the PV power device circuit), if desired.

[0128] In illustrative embodiments, PV power device **1203** may be similar to or the same as PV power device **903** of FIG. **9**, with power converter **900** of FIG. **9** comprising the Buck+Boost converter of FIG. **13**B. In some embodiments, boosting the voltage input to a PV power device **1203** might not be necessary, in which case PV power device **1203** may comprise a Buck converter similar to the Buck+Boost converter of FIG. **13**B, with switch Q**14** removed (i.e. replaced by an open-circuit) and switch Q**13** replaced with a wire (i.e. connecting the Vout terminal to the second central point).

[0129] Referring back to FIG. **12**, safety switch **1202***b* may be coupled to photovoltaic generators **1201***c* and **1201***d*, and to PV power devices **1203***a* and **1203***b*. Terminal T**2** may be connected to the positive output of PV generator **1201***c*, and terminal T**4** may be connected to the negative output of PV generator **1201***d*. Terminal T**1** may be coupled to a first Vout terminal of PV power device **1203***a*, and terminal T**3** may be coupled to the common terminal of PV power device **1203***b*. The positive output terminal of PV generator **1201***d* may be coupled to the Vin terminal of PV power device **1203***b*, and the negative output terminal of PV generator **1201***c* may be coupled to a second Vout terminal of PV power device **1203***a*. Under normal operating conditions, PV generators **1201***c* and **1201***d* are serially coupled,

the combined voltage of PV generators **1201***c* and **1201***d* input between the common and Vin terminals of PV power device **1203***b*. If an unsafe condition is detected, safety switch **1202***b* may disconnect the connection between terminals T**2** and T**4** (e.g. by setting transistor Q**7** of FIG. **13**A to OFF) and couple terminals T**3** and T**4** (e.g. by setting transistor Q**8** of FIG. **13**A to ON). As a result, PV generator **1201***d* may be coupled between the common and Vin terminals of PV power device **1203***b*, and PV generator **1201***c* may be coupled between terminals T**1** and T**2** of safety switch **1202***b*.

[0130] The system topology illustrated in FIG. **12** may provide certain advantages. For example, during normal system operation, two PV generators **1201** provide a combined voltage and power to a PV power device **1203**, requiring a reduced number of PV power devices for processing power generated by the PV generators. Furthermore, continuous operational power (i.e. power used for powering device components such as controllers and transistors) is provided to all PV power devices **1203** and safety switches **1202** both during normal operations and during a potentially unsafe condition.

[0131] Reference is now made to FIG. **14**, which shows part of a chain of photovoltaic devices according to an illustrative embodiment. Chain **1400** may comprise a plurality of PV power devices **1203** and a plurality of safety switches **1202**. Each safety switch **1202** may be connected, using conductors, between two PV power devices **1203**. Terminal T**1** of safety switch **1202** may be connected to a Vout terminal of a first PV power device, and terminal T**3** of safety switch **1202** may be connected to a common terminal of a second PV power device. Terminals T**2** and T**4** may be accessible via external connectors similar to or the same as connectors **406** and **407** of FIG. **4**A. Similarly, a Vout terminal and a Vin terminal of each PV power device **1203** may be accessible via external connectors similar to or the same as connectors **406** and **407** of FIG. **4**A. Conductors connecting a PV power device terminal (e.g. the common terminal) to a safety switch terminal (e.g. terminal T**3**) may be sized to facilitate connecting chain **1400** to a plurality of PV generators, as depicted in FIG. **12**. For example, in locales where PV generators are commonly 1-2 meters wide, each conductor disposed between a safety switch **1202** and a PV power device **1203** may be about 1-2 meters long. Chain **1400** may be assembled and sold as a single unit, saving cost and time when constructing a PV installation similar to or the same as PV system **1200** of FIG. **12**.

[0132] Referring to FIG. **15**, an illustrative application running on a smart phone, tablet, computer, workstation, mobile device (such as a cellular device) and/or a similar computing device is shown. The application may provide a list of safety switches disposed in a electrical power system (e.g. system **100** of FIG. **1**). The application may indicate a serial number or other identifying information of each safety switch, as well as identifying information of coupled PV generators and/or identifying information of a PV string each safety switch is coupled to. In some embodiments, the application may indicate the state of each safety switch and/or electrical parameters of one or more safety switches, for example, the voltage across or current through one or more safety switches. In some embodiments, the application may provide touch-screen buttons or similar input controllers for controlling the state of one or more switches. For example, activating a button **151** may move an associated safety switch to the OFF state, and activating a button **152** may move an associated safety switch to the ON state. Activating button **153** may move all safety switches to the OFF state, and activating button **154** may move all safety switches to the ON state. In some embodiments, activating buttons **151-154** may be restricted based on a user access level. For example, the application may enable buttons **151-154** only when running in "Installer/Administrator" mode, to restrict the actions of unsophisticated users.

[0133] Still referring to FIG. **15**, activating button **155** may enable a user to reconfigure a threshold. For example, an electrical voltage, current or power threshold which may be indicative of an arcing condition and trigger a system response (e.g. moving one or more safety switches to the OFF state) may be reconfigured by a user using the application of FIG. **15**. Activating button **156** may display a graphical layout of an electrical system represented by the application, including physical location details of one or more safety switches. Activating button **157** may download current or past operational system data such as the state of safety switches, and/or electrical parameter measurement measured by safety switches. Buttons **155-157** may similarly be restricted depending on the level of user authorization.

[0134] The application of FIG. **15** may communicate directly with safety switches via wireless communications (e.g. cellular communication, or over the internet). In some embodiments, the application may communicate with a system power device (e.g. system power device **110** of FIG. **1**), with the system power device configured to relay communication between the application and the safety switches via wireless communication or wired communication (e.g. power line communication).

[0135] Reference is now made to FIG. **16**, which illustrates another aspect of the present disclosure. A PV power device **1603** may be similar to or the same as PV power device **903** of FIG. **9**, and correspondingly, PV power device **803** of FIG. **8**. Components depicted and described above with reference to FIG. **9** are correspondingly depicted in FIG. **16**. Hence, power converter **1600** may be analogous to power converter **900** of FIG. **9**. Likewise, sensor(s) **1604** may be analogous to sensor(s) **904** of FIG. **9**; controller **1605** may be analogous to controller **905** of FIG. **9**; and so forth for the other components of the PV power device **903**, such as Maximum Power Point Tracking (MPPT) circuit **1606**; safety devices **1607**; auxiliary power circuit **1608**; memory device **1609**; communication device **1611**; and common bus **1620**, and so forth.

[0136] According to some aspects of the disclosure, PV power device **1603** may include power converter **1600** similar to, for example, PV power converter **900**. Power converter **1600** may comprise a direct current-direct current (DC/DC) converter such as a Buck, Boost, Buck/Boost, Buck+Boost, Cuk, Flyback and/or forward converter. According to some aspects, power converter **1600** may comprise a direct current-alternating current (DC/AC) converter (also known as an inverter), such a micro-inverter. PV power device **1603** may have three input terminals, T_{in1}, T_{in2}, and T_{in3}, and two output terminals (not labelled, for clarity of depiction).

[0137] Still referring to FIG. **16**, according to some aspects of the disclosure, PV power device **1603** may comprise switch S**16**, which may be coupled between input terminals T_{in1}, T_{in2}. Photovoltaic generator **1601***a* may

comprise an output terminal connected to an input terminal of PV power device **1603**, for instance, to input terminal T_{in1}. Photovoltaic generator **1601***a* may also comprise a second output terminal which may be connected to a negative output terminal of photovoltaic generator **1601***b*. The output from photovoltaic generator **1601***a* to the negative output terminal of photovoltaic generator **1601***b* may also connect to PV power device **1603** at input terminal T_{in2}. The connection to both the negative output terminal of photovoltaic generator **1601***b* and to an input terminal of PV power device **1603** may be via, for example, T-connector **1631**. T-connector **1631** may, over input terminal T_{in2}, connect to PV power device **1603**. Terminal T_{in2} may terminate at a switch S**16**, which is comprised in PV power device **1603**. Switch S**16** may comprise a transistor, similar to transistor Q**9** of FIG. **9**. Alternatively, the switch S**16** may comprise a relay or a different type of switch (e.g. an IGBT, BJT and the like). Photovoltaic generator **1601***b* may comprise an output terminal connected to an input terminal of PV power device **1603** via terminal T_{in3}.

[0138] Switch S**16** may comprise a control terminal. The control terminal of switch S**16** may be controlled by controller **1605**. Correspondingly, controller **1605** may be configured to control switch S**16**. If an unsafe condition, such as a grid-outage, overvoltage, undervoltage, a problem with the inverter (such as, but not limited to, the inverter described above with reference to power converter **900**), or any other problem which may result in a potentially unsafe condition, or a failure in the photovoltaic generator **1601***a*, is detected, controller **1605** may turn on switch S**16**, short-circuiting the input terminals of photovoltaic generator **1601***a* in order to protect, reduce the risk for, and so forth, power converter **1600** and/or personnel in the physical proximity of PV power device **1603**. When switch S**16** is OFF, the two PV generators **1601***a* and **1601***b* may be connected in series and to the input terminals of power converter **1600**. In both scenarios, a safe voltage at locations within the system may be maintained. When switch S**16** is ON, PV generator **1601***a* is short-circuited, and a reduced voltage between terminals T_{in3} and T_{in1} is obtained. Switch S**16** being OFF may be indicative of normal operating conditions, and under normal operating conditions an increased voltage between terminals T_{in3} and T_{in1} may be permissible.

[0139] In an example of an aspect of system operation, communication device **1611** may enable sensor(s) **1604** to monitor the system described herein across above the common bus **1620** for a "keep alive" signal, as described above with reference to FIG. **6**. In the absence of said "keep alive" signal, sensor(s) **1604** signals controller **1605** that a potentially unsafe condition might be occurring. Controller **1605** then may actuate switch S**16** (which may comprise a transistor, for instance, as already noted) in order to short circuit PV generator **1601***a*. Upon receipt of a wakeup or "keep alive" signal, in the event that switch S**16** is ON, the controller may eliminate the short circuit across PV generator **1601***a* by turning switch S**16** OFF.

[0140] It is appreciated that in the aspect of the present disclosure described herein above, in the event that PV generator **1601***a* fails, PV power device **1603** may continue working as long as switch S**16** is turned ON. In such a case, PV power device **1603** may continue to receive power from PV generator **1601***b*. It is also appreciated that T-connector **1631** may provide a test point for measuring voltage across the PV generator **1601***a*, thereby enabling calculation of the individual operating parameters of each of PV generator **1601***a* and PV generator **1601***b*. Voltmeter **1642** is depicted in FIG. **16** in parallel to switch S**16** to indicate this aspect.

[0141] According to another aspect of the present disclosure, an additional switch (not depicted) might be positioned between terminals, T_{in2} and T_{in3}. The additional switch may also be controlled by controller **1605**. In such an aspect, the when both the additional switch is OFF, and switch S**16** is OFF, the two PV generators **1601***a* and **1601***b* are connected in series and the to input terminals of power converter **1600**. When switch S**16** is ON, and the additional switch is OFF, the output terminals of photovoltaic generator **1601***a* are short circuited and photovoltaic generator **1601***b* provides the power to the input terminals to power converter **1600**. Correspondingly, when the additional switch is ON and switch S**16** is OFF, the output terminals of photovoltaic generator **1601***b* are short circuited and photovoltaic generator **1601***a* provides the power to the input terminals of power converter **1600**. The ability to short circuit either one of photovoltaic generator **1601***a* or photovoltaic generator **1601***b* may make the system failure proof for each of the two photovoltaic generators **1601***a* and **1601***b*. When both switch S**16** is ON, and the additional switch is ON, the output terminals of both PV generators **1601***a* and **1601***b* are short-circuited, thereby the input terminals of power converter **1600** are also short-circuited. Switch S**16** (as noted above) and the additional switch may comprise a relay, a transistor, including, but not limited to a MOSFET, an IGBT, a BJT, a JFET, and so forth, or another appropriate switching element.

[0142] In still another aspect of the present disclosure, a single photovoltaic generator (not depicted) may be utilized rather than photovoltaic generator **1601***a* and photovoltaic generator **1601***b*. The single photovoltaic generator may have at least three output terminals (e.g., a first series string of solar cells connected between first and second output terminals, and a second series string of solar cells connected between the second output terminal and a third output terminal). The three output terminals may, respectively, connect to the PV power device **1603** over input terminals T_{in1}, T_{in2}, and T_{in3}. As described above, if an unsafe condition, such as a grid-outage, overvoltage, undervoltage, a problem with the inverter (such as, but not limited to, the inverter described above with reference to power converter **900**), or any other problem which may result in a potentially unsafe condition, or a failure in the single photovoltaic generator, is detected, controller **1605** may turn on switch S**16**, short-circuiting the two of the terminals of the single photovoltaic generator in order to protect, reduce the risk for, and so forth, power converter **1600** and/or personnel in the physical proximity of PV power device **1603**. When switch S**16** is OFF, the output terminals of the single photovoltaic generator may be connected in series to the input terminals of power converter **1600**, (i.e., "normal operation") as described herein above.

[0143] In illustrative embodiments disclosed herein, photovoltaic generators are used as examples of power sources which may make use of the novel features disclosed. Each PV generator may comprise one or more solar cells, one or more solar cell strings, one or more solar panels, one or more solar shingles, or combinations thereof. In some embodiments, the power sources may include batteries, flywheels, wind or hydroelectric turbines, fuel cells or other energy sources in addition to or instead of photovoltaic panels.

Systems, apparatuses and methods disclosed herein which use PV generators may be equally applicable to alternative systems using additional power sources, and these alternative systems are included in embodiments disclosed herein.

[0144] It is noted that various connections are set forth between elements herein. These connections are described in general and, unless specified otherwise, may be direct or indirect; this specification is not intended to be limiting in this respect. Further, elements of one embodiment may be combined with elements from other embodiments in appropriate combinations or subcombinations. For example, PV power device circuitry of one embodiments may be combined with and/or exchanged for power device circuitry of a different embodiment. For example, transistor Q**9** of PV power device **903** may be disposed between electrical connections **512** and **513** of junction box **511** and operated to short-circuit the input to PV generator **101** of FIG. **5**A.

What is claimed is:

1. An apparatus comprising:

a controller configured to:

detect a sensor measurement indicative of a potentially unsafe condition at a power generation installation, the power generation installation comprising at least two power sources and at least one switching element, wherein each at least one switching element is connected in parallel to at least one power source of the at least two power sources and is connected to a power device;

control the at least one switching element to create a short-circuit across the at least one power source of the at least two power sources;

receive a sensor measurement indicating that the potentially unsafe condition is no longer present; and

control the at least one switching element to eliminate the short circuit across the at least one power source of the at least two power sources.

2. The apparatus according to claim **1**, wherein the at least two power sources comprise two power sources connected to one another at a midpoint, each of the two power sources further comprising a connection to the power device.

3. The apparatus according to claim **1**, wherein the at least two power sources comprise two power sources connected to one another at a midpoint, each of the at least two power sources are connected at an electrical T-connector disposed at the midpoint.

4. The apparatus according to claim **1**, wherein the at least two power sources comprise a photovoltaic generator.

5. The apparatus according to claim **1**, wherein the at least one switching element comprises at least one of a transistor or a relay.

6. The apparatus according to claim **1**, further comprising a communication device coupled to the controller, wherein the communication device is configured to receive a message indicative of the potentially unsafe condition and to provide an indication of the potentially unsafe condition to the controller.

7. The apparatus according to claim **6** wherein the communication device comprises at least one of a power line communication device or a wireless communication device.

8. The apparatus according to claim **1**, further comprising a sensor coupled to the controller, wherein the sensor is configured to measure one or more electrical parameters and to provide one or more measurements to the controller, wherein the one or more measurements include the sensor measurement indicative of the potentially unsafe condition.

9. The apparatus according to claim **8** wherein the sensor comprises a current sensor, and wherein the sensor measurement indicative of the potentially unsafe condition includes at least one of: a high current measurement; a measurement indicating a change in current flow; and a measurement indicating a mismatch with another electrical parameter.

10. A method comprising:

detecting, by a controller, a sensor measurement indicative of a potentially unsafe condition at a power generation installation comprising at least two power sources and at least one switching element, wherein each at least one switching element is connected in parallel to at least one power source of the at least two power sources and is connected to a power device;

controlling, by the controller, the at least one switching element to short-circuit at least one power source chosen from among the at least two power sources;

receiving, by the controller, a sensor measurement indicating that the potentially unsafe condition is no longer present; and

controlling, by the controller, the at least one switching element to reconnect the at least one power source chosen from among the at least two power sources to the power device.

11. The method according to claim **10** wherein the at least two power sources comprise two power sources connected to one another at a midpoint, each of the two power sources further comprising a connection to the power device.

12. The method according to claim **11** wherein the at least two power sources comprises two power sources that are connected to one another at an electrical T-connector disposed at the midpoint.

13. The method according to claim **10** wherein the at least two power sources comprise a photovoltaic generator.

14. The method according to claim **10** wherein the at least one switching element comprises at least one of a transistor or a relay.

15. The method according to claim **10**, further comprising a communication device coupled to the controller, wherein the communication device is configured to receive a message indicative of the potentially unsafe condition and to provide an indication of the potentially unsafe condition to the controller.

16. The method according to claim **16** wherein the communication device comprises at least one of a power line communication device and a wireless communication device.

17. The method according to claim **10**, further comprising a sensor coupled to the controller, wherein the sensor is configured to measure one or more electrical parameters and to provide one or more measurements to the controller, wherein the one or more measurements include the sensor measurement indicative of the potentially unsafe condition.

18. The method according to claim **17** wherein the sensor comprises a current sensor, and wherein the sensor measurement indicative of the potentially unsafe condition includes at least one of: a high current measurement; a measurement indicating a change in current flow; and a measurement indicating a mismatch with another electrical parameter.

19. The method according to claim **10**, further comprising an auxiliary power circuit coupled to the at least one power source and to the controller, wherein the auxiliary power circuit is configured to draw power from at least one power source and provide drawn power to the controller.

20. An apparatus comprising:

a first power source having at least a first terminal and a second terminal;

a second power source having at least a first terminal and a second terminal, the second terminal of the second power source connected to the first terminal of the first power source;

a power device comprising:

a first input terminal connected to the second terminal of the first power source;

a second input terminal connected to the first terminal of the second power source;

a third input terminal connected to the first terminal of the first power source and the second terminal of the second power source;

a power converter connected between the first and second input terminals; and

a switch disposed between the second and third input terminals; and

a controller configured to control the switch to be OFF during normal operating conditions and to be ON in response to an unsafe condition.

21. The apparatus according to claim **20**, wherein the third input terminal, the first terminal of the first power source and the second terminal of the second power source are connected using a T-connector.

* * * * *