US010420553B2

(12) **United States Patent**
**Shelton, IV et al.**

(10) **Patent No.: US 10,420,553 B2**
(45) **Date of Patent: *Sep. 24, 2019**

(54) **STAPLE CARTRIDGE COMPRISING A STAPLE DRIVER ARRANGEMENT**

(71) Applicant: **Ethicon LLC**, Guaynabo, PR (US)

(72) Inventors: **Frederick E. Shelton, IV**, Hillsboro, OH (US); **Michael A. Murray**, Bellevue, KY (US); **Christopher J. Hess**, Blue Ash, OH (US); **William B. Weisenburgh, II**, Maineville, OH (US); **Jerome R. Morgan**, Cincinnati, OH (US)

(73) Assignee: **Ethicon LLC**, Guaynabo, PR (US)

( * ) Notice: Subject to any disclaimer, the term of this patent is extended or adjusted under 35 U.S.C. 154(b) by 514 days.

This patent is subject to a terminal disclaimer.

(21) Appl. No.: **15/141,597**

(22) Filed: **Apr. 28, 2016**

(65) **Prior Publication Data**

US 2016/0242777 A1 Aug. 25, 2016

**Related U.S. Application Data**

(63) Continuation of application No. 13/965,877, filed on Aug. 13, 2013, now Pat. No. 9,561,032, which is a (Continued)

(51) **Int. Cl.**
***A61B 17/072*** (2006.01)
***A61B 17/064*** (2006.01)
(Continued)

(52) **U.S. Cl.**
CPC ..... ***A61B 17/07207*** (2013.01); ***A61B 17/064*** (2013.01); ***A61B 17/0643*** (2013.01);
(Continued)

(58) **Field of Classification Search**
CPC ... A61B 17/064; A61B 17/072; A61B 17/105; A61B 17/32; A61B 17/068
(Continued)

(56) **References Cited**

U.S. PATENT DOCUMENTS

66,052 A 6/1867 Smith
662,587 A 11/1900 Blake
(Continued)

FOREIGN PATENT DOCUMENTS

AU 2008207624 A1 3/2009
AU 2010214687 A1 9/2010
(Continued)

OTHER PUBLICATIONS

"Biomedical Coatings," Fort Wayne Metals, Research Products Corporation, obtained online at www.fwmetals.com on Jun. 21, 2010 (1 page).
(Continued)

*Primary Examiner* — Nathaniel C Chukwurah

(57) **ABSTRACT**

A staple cartridge for use with a stapling device that has an actuator that is selectively actuatable in an axial direction and an anvil portion that is selectively movable between open and closed positions is disclosed. Various embodiments of the present invention include a cartridge body that movably supports first and second staple drivers. The staple drivers each support a staple thereon and serve to drive the staples into forming contact with the anvil upon actuation by the actuator. The various embodiments of the present invention enable the final formed heights of the staples to be varied so as to apply various clamping forces and pressures to soft tissue captured within the staples. In at least one embodiment, the staples can include crowns formed thereon which can be utilized to adjust or control the clamping force and/or pressure applied by the staples.

**3 Claims, 52 Drawing Sheets**

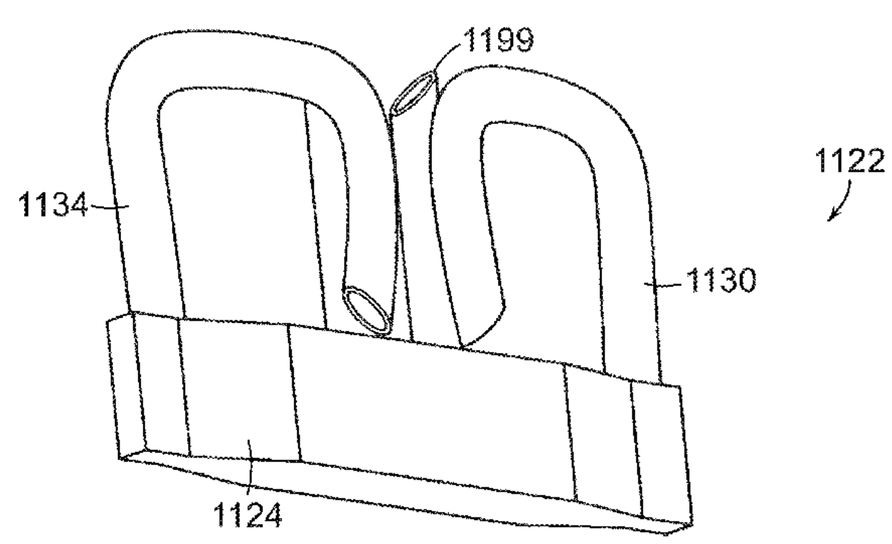

**Related U.S. Application Data**

continuation of application No. 13/072,923, filed on Mar. 28, 2011, now Pat. No. 8,567,656, which is a continuation of application No. 12/038,939, filed on Feb. 28, 2008, now Pat. No. 7,934,630, which is a continuation-in-part of application No. 11/216,562, filed on Aug. 31, 2005, now Pat. No. 7,669,746, and a continuation-in-part of application No. 11/541,374, filed on Sep. 29, 2006, now Pat. No. 8,365,976, and a continuation-in-part of application No. 11/824,251, filed on Jun. 29, 2007, now Pat. No. 8,991,676.

(51) **Int. Cl.**

| | |
|---|---|
| ***A61B 17/068*** | (2006.01) |
| ***A61B 17/10*** | (2006.01) |
| ***A61B 17/32*** | (2006.01) |
| *A61B 90/00* | (2016.01) |
| *A61B 17/115* | (2006.01) |
| *A61B 17/00* | (2006.01) |
| *A61B 17/29* | (2006.01) |

(52) **U.S. Cl.**

CPC ..... ***A61B 17/0644*** (2013.01); ***A61B 17/0682*** (2013.01); ***A61B 17/072*** (2013.01); ***A61B 17/105*** (2013.01); ***A61B 17/32*** (2013.01); *A61B 17/07292* (2013.01); *A61B 17/1155* (2013.01); *A61B 2017/00004* (2013.01); *A61B 2017/0023* (2013.01); *A61B 2017/00371* (2013.01); *A61B 2017/00898* (2013.01); *A61B 2017/00929* (2013.01); *A61B 2017/0641* (2013.01); *A61B 2017/0725* (2013.01); *A61B 2017/07235* (2013.01); *A61B 2017/07242* (2013.01); *A61B 2017/07264* (2013.01); *A61B 2017/07278* (2013.01); *A61B 2017/2923* (2013.01); *A61B 2017/320052* (2013.01); *A61B 2090/034* (2016.02); *A61B 2090/037* (2016.02)

(58) **Field of Classification Search**

USPC ..... 227/175.1–181.1

See application file for complete search history.

(56) **References Cited**

U.S. PATENT DOCUMENTS

| | | | |
|---|---|---|---|
| 670,748 | A | 3/1901 | Weddeler |
| 719,487 | A | 2/1903 | Minor |
| 804,229 | A | 11/1905 | Hutchinson |
| 951,393 | A | 3/1910 | Hahn |
| 1,306,107 | A | 6/1919 | Elliott |
| 1,314,601 | A | 9/1919 | McCaskey |
| 1,677,337 | A | 7/1928 | Grove |
| 1,794,907 | A | 3/1931 | Kelly |
| 1,849,427 | A | 3/1932 | Hook |
| 1,944,116 | A | 1/1934 | Stratman |
| 1,954,048 | A | 4/1934 | Jeffrey et al. |
| 2,037,727 | A | 4/1936 | La Chapelle |
| 2,132,295 | A | 10/1938 | Hawkins |
| 2,161,632 | A | 6/1939 | Nattenheimer |
| 2,211,117 | A | 8/1940 | Hess |
| 2,214,870 | A | 9/1940 | West |
| 2,224,882 | A | 12/1940 | Peck |
| 2,318,379 | A | 5/1943 | Davis et al. |
| 2,329,440 | A | 9/1943 | La Place |
| 2,377,581 | A | 6/1945 | Shaffrey |
| 2,441,096 | A | 5/1948 | Happe |
| 2,448,741 | A | 9/1948 | Scott et al. |
| 2,450,527 | A | 10/1948 | Smith |
| 2,526,902 | A | 10/1950 | Rublee |
| 2,527,256 | A | 10/1950 | Jackson |
| 2,578,686 | A | 12/1951 | Fish |
| 2,638,901 | A | 5/1953 | Sugarbaker |
| 2,674,149 | A | 4/1954 | Benson |
| 2,711,461 | A | 6/1955 | Happe |
| 2,742,955 | A | 4/1956 | Dominguez |
| 2,804,848 | A | 9/1957 | O'Farrell et al. |
| 2,808,482 | A | 10/1957 | Zanichkowsky et al. |
| 2,853,074 | A | 9/1958 | Olson |
| 2,887,004 | A | 5/1959 | Stewart |
| 2,957,353 | A | 10/1960 | Lewis |
| 2,959,974 | A | 11/1960 | Emrick |
| 3,032,769 | A | 5/1962 | Palmer |
| 3,060,972 | A | 10/1962 | Sheldon |
| 3,075,062 | A | 1/1963 | Iaccarino |
| 3,078,465 | A | 2/1963 | Bobrov |
| 3,079,606 | A | 3/1963 | Bobrov et al. |
| 3,080,564 | A | 3/1963 | Strekopitov et al. |
| 3,166,072 | A | 1/1965 | Sullivan, Jr. |
| 3,180,236 | A | 4/1965 | Beckett |
| 3,196,869 | A | 7/1965 | Scholl |
| 3,204,731 | A | 9/1965 | Bent et al. |
| 3,266,494 | A | 8/1966 | Brownrigg et al. |
| 3,269,630 | A | 8/1966 | Fleischer |
| 3,269,631 | A | 8/1966 | Takaro |
| 3,275,211 | A | 9/1966 | Hirsch et al. |
| 3,317,103 | A | 5/1967 | Cullen et al. |
| 3,317,105 | A | 5/1967 | Astafjev et al. |
| 3,357,296 | A | 12/1967 | Lefever |
| 3,359,978 | A | 12/1967 | Smith, Jr. |
| 3,480,193 | A | 11/1969 | Ralston |
| 3,490,675 | A | 1/1970 | Green et al. |
| 3,494,533 | A | 2/1970 | Green et al. |
| 3,499,591 | A | 3/1970 | Green |
| 3,503,396 | A | 3/1970 | Pierie et al. |
| 3,509,629 | A | 5/1970 | Kidokoro |
| 3,551,987 | A | 1/1971 | Wilkinson |
| 3,568,675 | A | 3/1971 | Harvey |
| 3,572,159 | A | 3/1971 | Tschanz |
| 3,583,393 | A | 6/1971 | Takahashi |
| 3,589,589 | A | 6/1971 | Akopov |
| 3,598,943 | A | 8/1971 | Barrett |
| 3,608,549 | A | 9/1971 | Merrill |
| 3,618,842 | A | 11/1971 | Bryan |
| 3,638,652 | A | 2/1972 | Kelley |
| 3,640,317 | A | 2/1972 | Panfili |
| 3,643,851 | A | 2/1972 | Green et al. |
| 3,650,453 | A | 3/1972 | Smith, Jr. |
| 3,661,666 | A | 5/1972 | Foster et al. |
| 3,662,939 | A | 5/1972 | Bryan |
| 3,688,966 | A | 9/1972 | Perkins et al. |
| 3,695,646 | A | 10/1972 | Mommsen |
| 3,709,221 | A | 1/1973 | Riely |
| 3,717,294 | A | 2/1973 | Green |
| 3,727,904 | A | 4/1973 | Gabbey |
| 3,734,207 | A | 5/1973 | Fishbein |
| 3,740,994 | A | 6/1973 | De Carlo, Jr. |
| 3,744,495 | A | 7/1973 | Johnson |
| 3,746,002 | A | 7/1973 | Haller |
| 3,747,603 | A | 7/1973 | Adler |
| 3,751,902 | A | 8/1973 | Kingsbury et al. |
| 3,752,161 | A | 8/1973 | Bent |
| 3,799,151 | A | 3/1974 | Fukaumi et al. |
| 3,808,452 | A | 4/1974 | Hutchinson |
| 3,815,476 | A | 6/1974 | Green et al. |
| 3,819,100 | A | 6/1974 | Noiles et al. |
| 3,821,919 | A | 7/1974 | Knohl |
| 3,836,171 | A | 9/1974 | Hayashi et al. |
| 3,837,555 | A | 9/1974 | Green |
| 3,841,474 | A | 10/1974 | Maier |
| 3,851,196 | A | 11/1974 | Hinds |
| 3,863,639 | A | 2/1975 | Kleaveland |
| 3,883,624 | A | 5/1975 | McKenzie et al. |
| 3,885,491 | A | 5/1975 | Curtis |
| 3,892,228 | A | 7/1975 | Mitsui |
| 3,894,174 | A | 7/1975 | Cartun |
| 3,902,247 | A | 9/1975 | Fleer et al. |
| 3,940,844 | A | 3/1976 | Colby et al. |
| 3,944,163 | A | 3/1976 | Hayashi et al. |
| 3,950,686 | A | 4/1976 | Randall |
| 3,952,747 | A | 4/1976 | Kimmell, Jr. |

(56) **References Cited**

U.S. PATENT DOCUMENTS

3,955,581 A 5/1976 Spasiano et al.
3,959,879 A 6/1976 Sellers
RE28,932 E 8/1976 Noiles et al.
3,972,734 A 8/1976 King
3,981,051 A 9/1976 Brumlik
4,025,216 A 5/1977 Hives
4,027,746 A 6/1977 Kine
4,034,143 A 7/1977 Sweet
4,054,108 A 10/1977 Gill
4,060,089 A 11/1977 Noiles
4,066,133 A 1/1978 Voss
4,100,820 A 7/1978 Evett
4,106,446 A 8/1978 Yamada et al.
4,108,211 A 8/1978 Tanaka
4,111,206 A 9/1978 Vishnevsky et al.
4,127,227 A 11/1978 Green
4,129,059 A 12/1978 Van Eck
4,132,146 A 1/1979 Uhlig
4,135,517 A 1/1979 Reale
4,154,122 A 5/1979 Severin
4,169,990 A 10/1979 Lerdman
4,180,285 A 12/1979 Reneau
4,185,701 A 1/1980 Boys
4,190,042 A 2/1980 Sinnreich
4,198,734 A 4/1980 Brumlik
4,198,982 A 4/1980 Fortner et al.
4,207,898 A 6/1980 Becht
4,213,562 A 7/1980 Garrett et al.
4,226,242 A 10/1980 Jarvik
4,239,431 A 12/1980 Davini
4,241,861 A 12/1980 Fleischer
4,244,372 A 1/1981 Kapitanov et al.
4,250,436 A 2/1981 Weissman
4,261,244 A 4/1981 Becht et al.
4,272,002 A 6/1981 Moshofsky
4,272,662 A 6/1981 Simpson
4,274,304 A 6/1981 Curtiss
4,274,398 A 6/1981 Scott, Jr.
4,275,813 A 6/1981 Noiles
4,278,091 A 7/1981 Borzone
4,289,131 A 9/1981 Mueller
4,289,133 A 9/1981 Rothfuss
4,290,542 A 9/1981 Fedotov et al.
D261,356 S 10/1981 Robinson
4,296,654 A 10/1981 Mercer
4,296,881 A 10/1981 Lee
4,304,236 A 12/1981 Conta et al.
4,305,539 A 12/1981 Korolkov et al.
4,312,363 A 1/1982 Rothfuss et al.
4,312,685 A 1/1982 Riedl
4,317,451 A 3/1982 Cerwin et al.
4,319,576 A * 3/1982 Rothfuss ..... A61B 17/115 227/175.3
4,321,002 A 3/1982 Froehlich
4,321,746 A 3/1982 Grinage
4,328,839 A 5/1982 Lyons et al.
4,331,277 A 5/1982 Green
4,340,331 A 7/1982 Savino
4,347,450 A 8/1982 Colligan
4,349,028 A 9/1982 Green
4,350,151 A 9/1982 Scott
4,353,371 A 10/1982 Cosman
4,357,940 A 11/1982 Muller
4,361,057 A 11/1982 Kochera
4,366,544 A 12/1982 Shima et al.
4,373,147 A 2/1983 Carlson, Jr.
4,376,380 A 3/1983 Burgess
4,379,457 A 4/1983 Gravener et al.
4,380,312 A 4/1983 Landrus
4,382,326 A 5/1983 Rabuse
4,383,634 A 5/1983 Green
4,393,728 A 7/1983 Larson et al.
4,396,139 A 8/1983 Hall et al.
4,397,311 A 8/1983 Kanshin et al.
4,402,445 A 9/1983 Green
4,406,621 A 9/1983 Bailey
4,408,692 A 10/1983 Sigel et al.
4,409,057 A 10/1983 Molenda et al.
4,415,112 A 11/1983 Green
4,416,276 A 11/1983 Newton et al.
4,417,890 A 11/1983 Dennehey et al.
4,423,456 A 12/1983 Zaidenweber
4,428,376 A 1/1984 Mericle
4,429,695 A 2/1984 Green
4,430,997 A 2/1984 DiGiovanni et al.
4,434,796 A 3/1984 Karapetian et al.
4,438,659 A 3/1984 Desplats
4,442,964 A 4/1984 Becht
4,448,194 A 5/1984 DiGiovanni et al.
4,451,743 A 5/1984 Suzuki et al.
4,452,376 A 6/1984 Klieman et al.
4,454,887 A 6/1984 Kruger
4,461,305 A 7/1984 Cibley
4,467,805 A 8/1984 Fukuda
4,469,481 A 9/1984 Kobayashi
4,470,414 A 9/1984 Imagawa et al.
4,471,780 A 9/1984 Menges et al.
4,471,781 A 9/1984 Di Giovanni et al.
4,473,077 A 9/1984 Noiles et al.
4,475,679 A 10/1984 Fleury, Jr.
4,478,220 A 10/1984 Di Giovanni et al.
4,480,641 A 11/1984 Failla et al.
4,485,816 A 12/1984 Krumme
4,485,817 A 12/1984 Swiggett
4,486,928 A 12/1984 Tucker et al.
4,488,523 A 12/1984 Shichman
4,489,875 A 12/1984 Crawford et al.
4,493,983 A 1/1985 Taggert
4,499,895 A 2/1985 Takayama
4,500,024 A 2/1985 DiGiovanni et al.
D278,081 S 3/1985 Green
4,503,842 A 3/1985 Takayama
4,505,272 A 3/1985 Utyamyshev et al.
4,505,273 A 3/1985 Braun et al.
4,505,414 A 3/1985 Filipi
4,506,671 A 3/1985 Green
4,512,038 A 4/1985 Alexander et al.
4,520,817 A 6/1985 Green
4,522,327 A 6/1985 Korthoff et al.
4,526,174 A 7/1985 Froehlich
4,527,724 A 7/1985 Chow et al.
4,530,357 A 7/1985 Pawloski et al.
4,530,453 A 7/1985 Green
4,531,522 A 7/1985 Bedi et al.
4,532,927 A 8/1985 Miksza, Jr.
4,540,202 A 9/1985 Amphoux et al.
4,548,202 A 10/1985 Duncan
4,556,058 A 12/1985 Green
4,560,915 A 12/1985 Soultanian
4,565,109 A 1/1986 Tsay
4,565,189 A 1/1986 Mabuchi
4,566,620 A 1/1986 Green et al.
4,569,346 A 2/1986 Poirier
4,569,469 A 2/1986 Mongeon et al.
4,571,213 A 2/1986 Ishimoto
4,573,468 A 3/1986 Conta et al.
4,573,469 A 3/1986 Golden et al.
4,573,622 A 3/1986 Green et al.
4,576,165 A 3/1986 Green et al.
4,576,167 A 3/1986 Noiles
4,580,712 A 4/1986 Green
4,585,153 A 4/1986 Failla et al.
4,586,501 A 5/1986 Claracq
4,586,502 A 5/1986 Bedi et al.
4,589,416 A 5/1986 Green
4,589,870 A 5/1986 Citrin et al.
4,591,085 A 5/1986 Di Giovanni
RE32,214 E 7/1986 Schramm
4,597,753 A 7/1986 Turley
4,600,037 A 7/1986 Hatten
4,604,786 A 8/1986 Howie, Jr.
4,605,001 A 8/1986 Rothfuss et al.
4,605,004 A 8/1986 Di Giovanni et al.
4,606,343 A 8/1986 Conta et al.

(56) **References Cited**

U.S. PATENT DOCUMENTS

4,607,638 A 8/1986 Crainich
4,608,981 A 9/1986 Rothfuss et al.
4,610,250 A 9/1986 Green
4,610,383 A 9/1986 Rothfuss et al.
4,612,933 A 9/1986 Brinkerhoff et al.
D286,180 S 10/1986 Korthoff
D286,442 S 10/1986 Korthoff et al.
4,617,914 A 10/1986 Ueda
4,619,262 A 10/1986 Taylor
4,619,391 A 10/1986 Sharkany et al.
D287,278 S 12/1986 Spreckelmeier
4,628,459 A 12/1986 Shinohara et al.
4,629,107 A 12/1986 Fedotov et al.
4,632,290 A 12/1986 Green et al.
4,633,861 A 1/1987 Chow et al.
4,633,874 A 1/1987 Chow et al.
4,634,419 A 1/1987 Kreizman et al.
4,635,638 A 1/1987 Weintraub et al.
4,641,076 A 2/1987 Linden
4,642,618 A 2/1987 Johnson et al.
4,643,173 A 2/1987 Bell et al.
4,643,731 A 2/1987 Eckenhoff
4,646,722 A 3/1987 Silverstein et al.
4,646,745 A 3/1987 Noiles
4,652,820 A 3/1987 Maresca
4,654,028 A 3/1987 Suma
4,655,222 A 4/1987 Florez et al.
4,662,555 A 5/1987 Thornton
4,663,874 A 5/1987 Sano et al.
4,664,305 A 5/1987 Blake, III et al.
4,665,916 A 5/1987 Green
4,667,674 A 5/1987 Korthoff et al.
4,669,647 A 6/1987 Storace
4,671,278 A 6/1987 Chin
4,671,280 A 6/1987 Dorband et al.
4,671,445 A 6/1987 Barker et al.
4,672,964 A 6/1987 Dee et al.
4,675,944 A 6/1987 Wells
4,676,245 A 6/1987 Fukuda
4,679,460 A 7/1987 Yoshigai
4,679,719 A 7/1987 Kramer
4,684,051 A 8/1987 Akopov et al.
4,688,555 A 8/1987 Wardle
4,691,703 A 9/1987 Auth et al.
4,693,248 A 9/1987 Failla
4,698,579 A 10/1987 Richter et al.
4,700,703 A 10/1987 Resnick et al.
4,705,038 A 11/1987 Sjostrom et al.
4,708,141 A 11/1987 Inoue et al.
4,709,120 A 11/1987 Pearson
4,715,520 A 12/1987 Roehr, Jr. et al.
4,719,917 A 1/1988 Barrows et al.
4,721,099 A 1/1988 Chikama
4,724,840 A 2/1988 McVay et al.
4,727,308 A 2/1988 Huljak et al.
4,728,020 A 3/1988 Green et al.
4,728,876 A 3/1988 Mongeon et al.
4,729,260 A 3/1988 Dudden
4,730,726 A 3/1988 Holzwarth
4,741,336 A 5/1988 Failla et al.
4,743,214 A 5/1988 Tai-Cheng
4,744,363 A 5/1988 Hasson
4,747,820 A 5/1988 Hornlein et al.
4,750,902 A 6/1988 Wuchinich et al.
4,752,024 A 6/1988 Green et al.
4,754,909 A 7/1988 Barker et al.
4,761,326 A 8/1988 Barnes et al.
4,763,669 A 8/1988 Jaeger
4,767,044 A 8/1988 Green
D297,764 S 9/1988 Hunt et al.
4,773,420 A 9/1988 Green
4,777,780 A 10/1988 Holzwarth
4,781,186 A 11/1988 Simpson et al.
4,784,137 A 11/1988 Kulik et al.
4,787,387 A 11/1988 Burbank, III et al.
D298,967 S 12/1988 Hunt
4,790,225 A 12/1988 Moody et al.
4,790,314 A 12/1988 Weaver
4,805,617 A 2/1989 Bedi et al.
4,805,823 A 2/1989 Rothfuss
4,807,628 A 2/1989 Peters et al.
4,809,695 A 3/1989 Gwathmey et al.
4,815,460 A 3/1989 Porat et al.
4,817,643 A 4/1989 Olson
4,817,847 A 4/1989 Redtenbacher et al.
4,819,853 A 4/1989 Green
4,821,939 A 4/1989 Green
4,827,911 A 5/1989 Broadwin et al.
4,828,542 A 5/1989 Hermann
4,828,944 A 5/1989 Yabe et al.
4,830,855 A 5/1989 Stewart
4,833,937 A 5/1989 Nagano
4,834,720 A 5/1989 Blinkhorn
4,838,859 A 6/1989 Strassmann
4,844,068 A 7/1989 Arata et al.
4,848,637 A 7/1989 Pruitt
4,856,078 A 8/1989 Konopka
4,860,644 A 8/1989 Kohl et al.
4,862,891 A 9/1989 Smith
4,863,423 A 9/1989 Wallace
4,865,030 A 9/1989 Polyak
4,868,530 A 9/1989 Ahs
4,869,414 A 9/1989 Green et al.
4,869,415 A 9/1989 Fox
4,873,977 A 10/1989 Avant et al.
4,875,486 A 10/1989 Rapoport et al.
4,880,015 A 11/1989 Nierman
4,890,613 A 1/1990 Golden et al.
4,892,244 A 1/1990 Fox et al.
4,893,622 A 1/1990 Green et al.
4,894,051 A 1/1990 Shiber
4,896,584 A 1/1990 Stoll et al.
4,896,678 A 1/1990 Ogawa
4,900,303 A 2/1990 Lemelson
4,903,697 A 2/1990 Resnick et al.
4,909,789 A 3/1990 Taguchi et al.
4,915,100 A 4/1990 Green
4,919,679 A 4/1990 Averill et al.
4,921,479 A 5/1990 Grayzel
4,925,082 A 5/1990 Kim
4,928,699 A 5/1990 Sasai
4,930,503 A 6/1990 Pruitt
4,930,674 A 6/1990 Barak
4,931,047 A 6/1990 Broadwin et al.
4,931,737 A 6/1990 Hishiki
4,932,960 A 6/1990 Green et al.
4,933,800 A 6/1990 Yang
4,933,843 A 6/1990 Scheller et al.
D309,350 S 7/1990 Sutherland et al.
4,938,408 A 7/1990 Bedi et al.
4,941,623 A 7/1990 Pruitt
4,943,182 A 7/1990 Hoblingre
4,944,443 A 7/1990 Oddsen et al.
4,946,067 A 8/1990 Kelsall
4,948,327 A 8/1990 Crupi, Jr.
4,949,707 A 8/1990 LeVahn et al.
4,951,860 A 8/1990 Peters et al.
4,951,861 A 8/1990 Schulze et al.
4,955,959 A 9/1990 Tompkins et al.
4,957,212 A 9/1990 Duck et al.
4,962,877 A 10/1990 Hervas
4,964,559 A 10/1990 Deniega et al.
4,964,863 A 10/1990 Kanshin et al.
4,965,709 A 10/1990 Ngo
4,973,274 A 11/1990 Hirukawa
4,973,302 A 11/1990 Armour et al.
4,978,049 A 12/1990 Green
4,978,333 A 12/1990 Broadwin et al.
4,979,952 A 12/1990 Kubota et al.
4,984,564 A 1/1991 Yuen
4,986,808 A 1/1991 Broadwin et al.
4,987,049 A 1/1991 Komamura et al.
4,988,334 A 1/1991 Hornlein et al.
4,995,877 A 2/1991 Ams et al.

(56) **References Cited**

U.S. PATENT DOCUMENTS


| | | | |
|---|---|---|---|
| 4,995,959 | A | 2/1991 | Metzner |
| 4,996,975 | A | 3/1991 | Nakamura |
| 5,002,543 | A | 3/1991 | Bradshaw et al. |
| 5,002,553 | A | 3/1991 | Shiber |
| 5,005,754 | A | 4/1991 | Van Overloop |
| 5,009,661 | A | 4/1991 | Michelson |
| 5,012,411 | A | 4/1991 | Policastro et al. |
| 5,014,898 | A | 5/1991 | Heidrich |
| 5,014,899 | A | 5/1991 | Presty et al. |
| 5,015,227 | A | 5/1991 | Broadwin et al. |
| 5,018,515 | A | 5/1991 | Gilman |
| 5,018,657 | A | 5/1991 | Pedlick et al. |
| 5,024,652 | A | 6/1991 | Dumenek et al. |
| 5,024,671 | A | 6/1991 | Tu et al. |
| 5,025,559 | A | 6/1991 | McCullough |
| 5,027,834 | A | 7/1991 | Pruitt |
| 5,030,226 | A | 7/1991 | Green et al. |
| 5,031,814 | A | 7/1991 | Tompkins et al. |
| 5,035,040 | A | 7/1991 | Kerrigan et al. |
| 5,038,109 | A | 8/1991 | Goble et al. |
| 5,038,247 | A | 8/1991 | Kelley et al. |
| 5,040,715 | A | 8/1991 | Green et al. |
| 5,042,707 | A | 8/1991 | Taheri |
| 5,061,269 | A | 10/1991 | Muller |
| 5,062,491 | A | 11/1991 | Takeshima et al. |
| 5,062,563 | A | 11/1991 | Green et al. |
| 5,065,929 | A | 11/1991 | Schulze et al. |
| 5,071,052 | A | 12/1991 | Rodak et al. |
| 5,071,430 | A | 12/1991 | de Salis et al. |
| 5,074,454 | A | 12/1991 | Peters |
| 5,077,506 | A | 12/1991 | Krause |
| 5,079,006 | A | 1/1992 | Urquhart |
| 5,080,556 | A | 1/1992 | Carreno |
| 5,083,695 | A | 1/1992 | Foslien et al. |
| 5,084,057 | A | 1/1992 | Green et al. |
| 5,088,979 | A | 2/1992 | Filipi et al. |
| 5,088,997 | A | 2/1992 | Delahuerga et al. |
| 5,089,606 | A | 2/1992 | Cole et al. |
| 5,094,247 | A | 3/1992 | Hernandez et al. |
| 5,098,004 | A | 3/1992 | Kerrigan |
| 5,098,360 | A | 3/1992 | Hirota |
| 5,100,042 | A | 3/1992 | Gravener et al. |
| 5,100,420 | A | 3/1992 | Green et al. |
| 5,104,025 | A | 4/1992 | Main et al. |
| 5,104,397 | A | 4/1992 | Vasconcelos et al. |
| 5,104,400 | A | 4/1992 | Berguer et al. |
| 5,106,008 | A | 4/1992 | Tompkins et al. |
| 5,108,368 | A | 4/1992 | Hammerslag et al. |
| 5,109,722 | A | 5/1992 | Hufnagle et al. |
| 5,111,987 | A | 5/1992 | Moeinzadeh et al. |
| 5,116,349 | A | 5/1992 | Aranyi |
| D327,323 | S | 6/1992 | Hunt |
| 5,119,009 | A | 6/1992 | McCaleb et al. |
| 5,122,156 | A | 6/1992 | Granger et al. |
| 5,124,990 | A | 6/1992 | Williamson |
| 5,129,570 | A | 7/1992 | Schulze et al. |
| 5,137,198 | A | 8/1992 | Nobis et al. |
| 5,139,513 | A | 8/1992 | Segato |
| 5,141,144 | A | 8/1992 | Foslien et al. |
| 5,142,932 | A | 9/1992 | Moya et al. |
| 5,155,941 | A | 10/1992 | Takahashi et al. |
| 5,156,315 | A | 10/1992 | Green et al. |
| 5,156,609 | A | 10/1992 | Nakao et al. |
| 5,156,614 | A | 10/1992 | Green et al. |
| 5,158,567 | A | 10/1992 | Green |
| D330,699 | S | 11/1992 | Gill |
| 5,163,598 | A | 11/1992 | Peters et al. |
| 5,168,605 | A | 12/1992 | Bartlett |
| 5,170,925 | A | 12/1992 | Madden et al. |
| 5,171,247 | A | 12/1992 | Hughett et al. |
| 5,171,249 | A | 12/1992 | Stefanchik et al. |
| 5,171,253 | A | 12/1992 | Klieman |
| 5,173,133 | A | 12/1992 | Morin et al. |
| 5,176,677 | A | 1/1993 | Wuchinich |
| 5,176,688 | A | 1/1993 | Narayan et al. |
| 5,187,422 | A | 2/1993 | Izenbaard et al. |
| 5,188,102 | A | 2/1993 | Idemoto et al. |
| 5,188,111 | A | 2/1993 | Yates et al. |
| 5,190,517 | A | 3/1993 | Zieve et al. |
| 5,190,544 | A | 3/1993 | Chapman et al. |
| 5,190,560 | A | 3/1993 | Woods et al. |
| 5,192,288 | A | 3/1993 | Thompson et al. |
| 5,195,505 | A | 3/1993 | Josefsen |
| 5,195,968 | A | 3/1993 | Lundquist et al. |
| 5,197,648 | A | 3/1993 | Gingold |
| 5,197,649 | A | 3/1993 | Bessler et al. |
| 5,197,966 | A | 3/1993 | Sommerkamp |
| 5,197,970 | A | 3/1993 | Green et al. |
| 5,200,280 | A | 4/1993 | Karasa |
| 5,201,750 | A | 4/1993 | Hocherl et al. |
| 5,205,459 | A | 4/1993 | Brinkerhoff et al. |
| 5,207,697 | A | 5/1993 | Carusillo et al. |
| 5,209,747 | A | 5/1993 | Knoepfler |
| 5,209,756 | A | 5/1993 | Seedhom et al. |
| 5,211,649 | A | 5/1993 | Kohler et al. |
| 5,211,655 | A | 5/1993 | Hasson |
| 5,217,457 | A | 6/1993 | Delahuerga et al. |
| 5,217,478 | A | 6/1993 | Rexroth |
| 5,219,111 | A | 6/1993 | Bilotti et al. |
| 5,220,269 | A | 6/1993 | Chen et al. |
| 5,221,036 | A | 6/1993 | Takase |
| 5,221,281 | A | 6/1993 | Klicek |
| 5,222,945 | A | 6/1993 | Basnight |
| 5,222,963 | A | 6/1993 | Brinkerhoff et al. |
| 5,222,975 | A | 6/1993 | Crainich |
| 5,222,976 | A | 6/1993 | Yoon |
| 5,223,675 | A | 6/1993 | Taft |
| D338,729 | S | 8/1993 | Sprecklemeier et al. |
| 5,234,447 | A | 8/1993 | Kaster et al. |
| 5,236,424 | A | 8/1993 | Imran |
| 5,236,440 | A | 8/1993 | Hlavacek |
| 5,239,981 | A | 8/1993 | Anapliotis |
| 5,240,163 | A | 8/1993 | Stein et al. |
| 5,242,457 | A | 9/1993 | Akopov et al. |
| 5,244,462 | A | 9/1993 | Delahuerga et al. |
| 5,246,156 | A | 9/1993 | Rothfuss et al. |
| 5,246,443 | A | 9/1993 | Mai |
| 5,253,793 | A | 10/1993 | Green et al. |
| 5,258,007 | A | 11/1993 | Spetzler et al. |
| 5,258,008 | A | 11/1993 | Wilk |
| 5,258,009 | A | 11/1993 | Conners |
| 5,258,010 | A * | 11/1993 | Green ..... A61B 17/0682 227/176.1 |
| 5,258,012 | A | 11/1993 | Luscombe et al. |
| 5,259,366 | A | 11/1993 | Reydel et al. |
| 5,259,835 | A | 11/1993 | Clark et al. |
| 5,260,637 | A | 11/1993 | Pizzi |
| 5,261,877 | A | 11/1993 | Fine et al. |
| 5,261,922 | A | 11/1993 | Hood |
| 5,263,629 | A | 11/1993 | Trumbull et al. |
| 5,263,937 | A | 11/1993 | Shipp |
| 5,263,973 | A * | 11/1993 | Cook ..... A61B 17/0643 606/215 |
| 5,264,218 | A | 11/1993 | Rogozinski |
| 5,268,622 | A | 12/1993 | Philipp |
| 5,271,543 | A | 12/1993 | Grant et al. |
| 5,271,544 | A | 12/1993 | Fox et al. |
| RE34,519 | E | 1/1994 | Fox et al. |
| 5,275,322 | A | 1/1994 | Brinkerhoff et al. |
| 5,275,323 | A | 1/1994 | Schulze et al. |
| 5,275,608 | A | 1/1994 | Forman et al. |
| 5,279,416 | A | 1/1994 | Malec et al. |
| 5,281,216 | A | 1/1994 | Klicek |
| 5,282,806 | A | 2/1994 | Haber et al. |
| 5,282,829 | A | 2/1994 | Hermes |
| 5,284,128 | A | 2/1994 | Hart |
| 5,285,381 | A | 2/1994 | Iskarous et al. |
| 5,285,945 | A | 2/1994 | Brinkerhoff et al. |
| 5,286,253 | A | 2/1994 | Fucci |
| 5,289,963 | A | 3/1994 | McGarry et al. |
| 5,290,271 | A | 3/1994 | Jernberg |
| 5,290,310 | A | 3/1994 | Makower et al. |
| 5,292,053 | A | 3/1994 | Bilotti et al. |
| 5,293,024 | A | 3/1994 | Sugahara et al. |

(56) **References Cited**

U.S. PATENT DOCUMENTS


| | | | |
|---|---|---|---|
| 5,297,714 | A | 3/1994 | Kramer |
| 5,304,204 | A | 4/1994 | Bregen |
| D347,474 | S | 5/1994 | Olson |
| 5,307,976 | A | 5/1994 | Olson et al. |
| 5,308,576 | A | 5/1994 | Green et al. |
| 5,309,387 | A | 5/1994 | Mori et al. |
| 5,309,927 | A | 5/1994 | Welch |
| 5,312,023 | A | 5/1994 | Green et al. |
| 5,312,024 | A | 5/1994 | Grant et al. |
| 5,312,329 | A | 5/1994 | Beaty et al. |
| 5,313,935 | A | 5/1994 | Kortenbach et al. |
| 5,313,967 | A | 5/1994 | Lieber et al. |
| 5,314,424 | A | 5/1994 | Nicholas |
| 5,314,445 | A | 5/1994 | Heidmueller nee Degwitz et al. |
| 5,314,466 | A | 5/1994 | Stern et al. |
| 5,318,221 | A | 6/1994 | Green et al. |
| 5,320,627 | A | 6/1994 | Sorensen et al. |
| D348,930 | S | 7/1994 | Olson |
| 5,326,013 | A | 7/1994 | Green et al. |
| 5,329,923 | A | 7/1994 | Lundquist |
| 5,330,487 | A | 7/1994 | Thornton et al. |
| 5,330,502 | A | 7/1994 | Hassler et al. |
| 5,331,971 | A | 7/1994 | Bales et al. |
| 5,332,142 | A | 7/1994 | Robinson et al. |
| 5,333,422 | A | 8/1994 | Warren et al. |
| 5,333,772 | A | 8/1994 | Rothfuss et al. |
| 5,333,773 | A | 8/1994 | Main et al. |
| 5,334,183 | A | 8/1994 | Wuchinich |
| 5,336,130 | A | 8/1994 | Ray |
| 5,336,229 | A | 8/1994 | Noda |
| 5,336,232 | A | 8/1994 | Green et al. |
| 5,339,799 | A | 8/1994 | Kami et al. |
| 5,341,724 | A | 8/1994 | Vatel |
| 5,341,807 | A | 8/1994 | Nardella |
| 5,341,810 | A | 8/1994 | Dardel |
| 5,342,380 | A | 8/1994 | Hood |
| 5,342,381 | A | 8/1994 | Tidemand |
| 5,342,385 | A | 8/1994 | Norelli et al. |
| 5,342,395 | A | 8/1994 | Jarrett et al. |
| 5,342,396 | A | 8/1994 | Cook |
| 5,343,382 | A | 8/1994 | Hale et al. |
| 5,343,391 | A | 8/1994 | Mushabac |
| 5,344,059 | A | 9/1994 | Green et al. |
| 5,344,060 | A | 9/1994 | Gravener et al. |
| 5,344,454 | A | 9/1994 | Clarke et al. |
| 5,346,504 | A | 9/1994 | Ortiz et al. |
| 5,348,259 | A | 9/1994 | Blanco et al. |
| 5,350,355 | A | 9/1994 | Sklar |
| 5,350,388 | A | 9/1994 | Epstein |
| 5,350,391 | A | 9/1994 | Iacovelli |
| 5,350,400 | A | 9/1994 | Esposito et al. |
| 5,352,229 | A | 10/1994 | Goble et al. |
| 5,352,235 | A | 10/1994 | Koros et al. |
| 5,352,238 | A | 10/1994 | Green et al. |
| 5,354,250 | A | 10/1994 | Christensen |
| 5,354,303 | A | 10/1994 | Spaeth et al. |
| 5,356,006 | A | 10/1994 | Alpern et al. |
| 5,356,064 | A | 10/1994 | Green et al. |
| 5,358,506 | A | 10/1994 | Green et al. |
| 5,358,510 | A | 10/1994 | Luscombe et al. |
| 5,359,231 | A | 10/1994 | Flowers et al. |
| D352,780 | S | 11/1994 | Glaeser et al. |
| 5,359,993 | A | 11/1994 | Slater et al. |
| 5,360,305 | A | 11/1994 | Kerrigan |
| 5,360,428 | A | 11/1994 | Hutchinson, Jr. |
| 5,364,001 | A | 11/1994 | Bryan |
| 5,364,002 | A | 11/1994 | Green et al. |
| 5,364,003 | A | 11/1994 | Williamson, IV |
| 5,366,133 | A | 11/1994 | Geiste |
| 5,366,134 | A | 11/1994 | Green et al. |
| 5,366,479 | A | 11/1994 | McGarry et al. |
| 5,368,015 | A | 11/1994 | Wilk |
| 5,368,592 | A | 11/1994 | Stern et al. |
| 5,369,565 | A | 11/1994 | Chen et al. |
| 5,370,645 | A | 12/1994 | Klicek et al. |
| 5,372,124 | A | 12/1994 | Takayama et al. |
| 5,372,596 | A | 12/1994 | Klicek et al. |
| 5,372,602 | A | 12/1994 | Burke |
| 5,374,277 | A | 12/1994 | Hassler |
| 5,375,588 | A | 12/1994 | Yoon |
| 5,376,095 | A | 12/1994 | Ortiz |
| 5,379,933 | A | 1/1995 | Green et al. |
| 5,381,649 | A | 1/1995 | Webb |
| 5,381,782 | A | 1/1995 | DeLaRama et al. |
| 5,381,943 | A | 1/1995 | Allen et al. |
| 5,382,247 | A | 1/1995 | Cimino et al. |
| 5,383,880 | A | 1/1995 | Hooven |
| 5,383,881 | A | 1/1995 | Green et al. |
| 5,383,882 | A | 1/1995 | Buess et al. |
| 5,383,888 | A | 1/1995 | Zvenyatsky et al. |
| 5,383,895 | A | 1/1995 | Holmes et al. |
| 5,388,568 | A | 2/1995 | van Der Heide |
| 5,389,098 | A | 2/1995 | Tsuruta et al. |
| 5,389,102 | A | 2/1995 | Green et al. |
| 5,389,104 | A | 2/1995 | Hahnen et al. |
| 5,391,180 | A | 2/1995 | Tovey et al. |
| 5,392,979 | A | 2/1995 | Green et al. |
| 5,395,030 | A | 3/1995 | Kuramoto et al. |
| 5,395,033 | A | 3/1995 | Byrne et al. |
| 5,395,034 | A | 3/1995 | Allen et al. |
| 5,395,312 | A | 3/1995 | Desai |
| 5,395,384 | A | 3/1995 | Duthoit et al. |
| 5,397,046 | A | 3/1995 | Savage et al. |
| 5,397,324 | A | 3/1995 | Carroll et al. |
| 5,400,267 | A | 3/1995 | Denen et al. |
| 5,403,276 | A | 4/1995 | Schechter et al. |
| 5,403,312 | A | 4/1995 | Yates et al. |
| 5,404,106 | A | 4/1995 | Matsuda |
| 5,404,870 | A | 4/1995 | Brinkerhoff et al. |
| 5,404,960 | A | 4/1995 | Wada et al. |
| 5,405,072 | A | 4/1995 | Zlock et al. |
| 5,405,073 | A | 4/1995 | Porter |
| 5,405,344 | A | 4/1995 | Williamson et al. |
| 5,405,360 | A | 4/1995 | Tovey |
| 5,407,293 | A | 4/1995 | Crainich |
| 5,408,409 | A | 4/1995 | Glassman et al. |
| 5,409,498 | A | 4/1995 | Braddock et al. |
| 5,409,703 | A | 4/1995 | McAnalley et al. |
| D357,981 | S | 5/1995 | Green et al. |
| 5,411,481 | A | 5/1995 | Allen et al. |
| 5,411,508 | A | 5/1995 | Bessler et al. |
| 5,413,107 | A | 5/1995 | Oakley et al. |
| 5,413,267 | A | 5/1995 | Solyntjes et al. |
| 5,413,268 | A | 5/1995 | Green et al. |
| 5,413,272 | A | 5/1995 | Green et al. |
| 5,413,573 | A | 5/1995 | Koivukangas |
| 5,415,334 | A | 5/1995 | Williamson et al. |
| 5,415,335 | A | 5/1995 | Knodell, Jr. |
| 5,417,203 | A | 5/1995 | Tovey et al. |
| 5,417,361 | A | 5/1995 | Williamson, IV |
| 5,419,766 | A | 5/1995 | Chang et al. |
| 5,421,829 | A | 6/1995 | Olichney et al. |
| 5,422,567 | A | 6/1995 | Matsunaga |
| 5,423,471 | A | 6/1995 | Mastri et al. |
| 5,423,809 | A | 6/1995 | Klicek |
| 5,423,835 | A | 6/1995 | Green et al. |
| 5,425,745 | A | 6/1995 | Green et al. |
| 5,427,298 | A | 6/1995 | Tegtmeier |
| 5,431,322 | A | 7/1995 | Green et al. |
| 5,431,323 | A | 7/1995 | Smith et al. |
| 5,431,654 | A | 7/1995 | Nic |
| 5,431,668 | A | 7/1995 | Burbank, III et al. |
| 5,433,721 | A | 7/1995 | Hooven et al. |
| 5,437,681 | A | 8/1995 | Meade et al. |
| 5,438,302 | A | 8/1995 | Goble |
| 5,439,155 | A | 8/1995 | Viola |
| 5,439,156 | A | 8/1995 | Grant et al. |
| 5,439,479 | A | 8/1995 | Shichman et al. |
| 5,441,191 | A | 8/1995 | Linden |
| 5,441,193 | A | 8/1995 | Gravener |
| 5,441,483 | A | 8/1995 | Avitall |
| 5,441,494 | A | 8/1995 | Ortiz |
| 5,443,197 | A | 8/1995 | Malis et al. |
| 5,443,463 | A | 8/1995 | Stern et al. |

(56) **References Cited**

U.S. PATENT DOCUMENTS

5,444,113 A 8/1995 Sinclair et al.
5,445,155 A 8/1995 Sieben
5,445,304 A 8/1995 Plyley et al.
5,445,604 A 8/1995 Lang
5,445,644 A 8/1995 Pietrafitta et al.
5,447,265 A 9/1995 Vidal et al.
5,447,417 A 9/1995 Kuhl et al.
5,447,513 A 9/1995 Davison et al.
5,449,355 A 9/1995 Rhum et al.
5,449,365 A 9/1995 Green et al.
5,449,370 A 9/1995 Vaitekunas
5,452,836 A 9/1995 Huitema et al.
5,452,837 A 9/1995 Williamson, IV et al.
5,454,378 A 10/1995 Palmer et al.
5,454,822 A 10/1995 Schob et al.
5,454,827 A 10/1995 Aust et al.
5,456,401 A 10/1995 Green et al.
5,456,917 A 10/1995 Wise et al.
5,458,279 A 10/1995 Plyley
5,458,579 A 10/1995 Chodorow et al.
5,462,215 A 10/1995 Viola et al.
5,464,013 A 11/1995 Lemelson
5,464,144 A 11/1995 Guy et al.
5,464,300 A 11/1995 Crainich
5,465,819 A 11/1995 Weilant et al.
5,465,894 A 11/1995 Clark et al.
5,465,895 A 11/1995 Knodel et al.
5,465,896 A 11/1995 Allen et al.
5,466,020 A 11/1995 Page et al.
5,467,911 A 11/1995 Tsuruta et al.
5,468,253 A 11/1995 Bezwada et al.
5,470,006 A 11/1995 Rodak
5,470,007 A 11/1995 Plyley et al.
5,470,008 A 11/1995 Rodak
5,470,009 A 11/1995 Rodak
5,470,010 A 11/1995 Rothfuss et al.
5,471,129 A 11/1995 Mann
5,472,132 A 12/1995 Savage et al.
5,472,442 A 12/1995 Klicek
5,473,204 A 12/1995 Temple
5,474,057 A 12/1995 Makower et al.
5,474,223 A 12/1995 Viola et al.
5,474,566 A 12/1995 Alesi et al.
5,476,206 A 12/1995 Green et al.
5,476,479 A 12/1995 Green et al.
5,476,481 A 12/1995 Schondorf
5,478,003 A 12/1995 Green et al.
5,478,354 A 12/1995 Tovey et al.
5,480,089 A 1/1996 Blewett
5,480,409 A 1/1996 Riza
5,482,197 A 1/1996 Green et al.
5,483,952 A 1/1996 Aranyi
5,484,095 A 1/1996 Green et al.
5,484,398 A 1/1996 Stoddard
5,484,451 A 1/1996 Akopov et al.
5,485,947 A 1/1996 Olson et al.
5,485,952 A 1/1996 Fontayne
5,487,499 A 1/1996 Sorrentino et al.
5,487,500 A 1/1996 Knodel et al.
5,489,058 A 2/1996 Plyley et al.
5,489,256 A 2/1996 Adair
5,489,290 A 2/1996 Furnish
5,490,819 A 2/1996 Nicholas et al.
5,492,671 A 2/1996 Krafft
5,496,312 A 3/1996 Klicek
5,496,317 A 3/1996 Goble et al.
5,497,933 A 3/1996 DeFonzo et al.
5,501,654 A 3/1996 Failla et al.
5,503,320 A 4/1996 Webster et al.
5,503,635 A 4/1996 Sauer et al.
5,503,638 A 4/1996 Cooper et al.
5,505,363 A 4/1996 Green et al.
5,507,426 A 4/1996 Young et al.
5,509,596 A 4/1996 Green et al.
5,509,916 A 4/1996 Taylor
5,511,564 A 4/1996 Wilk
5,514,129 A 5/1996 Smith
5,514,149 A 5/1996 Green et al.
5,514,157 A 5/1996 Nicholas et al.
5,518,163 A 5/1996 Hooven
5,518,164 A 5/1996 Hooven
5,520,609 A 5/1996 Moll et al.
5,520,634 A 5/1996 Fox et al.
5,520,678 A 5/1996 Heckele et al.
5,520,700 A 5/1996 Beyar et al.
5,522,817 A 6/1996 Sander et al.
5,522,831 A 6/1996 Sleister et al.
5,527,264 A 6/1996 Moll et al.
5,527,320 A 6/1996 Carruthers et al.
5,529,235 A 6/1996 Boiarski et al.
D372,086 S 7/1996 Grasso et al.
5,531,305 A 7/1996 Roberts et al.
5,531,744 A 7/1996 Nardella et al.
5,531,856 A 7/1996 Moll et al.
5,533,521 A 7/1996 Granger
5,533,581 A 7/1996 Barth et al.
5,533,661 A 7/1996 Main et al.
5,535,934 A 7/1996 Boiarski et al.
5,535,935 A 7/1996 Vidal et al.
5,535,937 A 7/1996 Boiarski et al.
5,540,375 A 7/1996 Bolanos et al.
5,540,705 A 7/1996 Meade et al.
5,541,376 A 7/1996 Ladtkow et al.
5,541,489 A 7/1996 Dunstan
5,542,594 A 8/1996 McKean et al.
5,542,949 A 8/1996 Yoon
5,543,119 A 8/1996 Sutter et al.
5,543,695 A 8/1996 Culp et al.
5,544,802 A 8/1996 Crainich
5,547,117 A 8/1996 Hamblin et al.
5,549,583 A 8/1996 Sanford et al.
5,549,621 A 8/1996 Bessler et al.
5,549,627 A 8/1996 Kieturakis
5,549,628 A 8/1996 Cooper et al.
5,549,637 A 8/1996 Crainich
5,551,622 A 9/1996 Yoon
5,553,624 A 9/1996 Francese et al.
5,553,675 A 9/1996 Pitzen et al.
5,553,765 A 9/1996 Knodel et al.
5,554,148 A 9/1996 Aebischer et al.
5,554,169 A 9/1996 Green et al.
5,556,020 A 9/1996 Hou
5,556,416 A 9/1996 Clark et al.
5,558,533 A 9/1996 Hashizawa et al.
5,558,665 A 9/1996 Kieturakis
5,558,671 A 9/1996 Yates
5,560,530 A 10/1996 Bolanos et al.
5,560,532 A 10/1996 DeFonzo et al.
5,561,881 A 10/1996 Klinger et al.
5,562,239 A 10/1996 Boiarski et al.
5,562,241 A 10/1996 Knodel et al.
5,562,682 A 10/1996 Oberlin et al.
5,562,690 A 10/1996 Green et al.
5,562,701 A 10/1996 Huitema et al.
5,562,702 A 10/1996 Huitema et al.
5,563,481 A 10/1996 Krause
5,564,615 A 10/1996 Bishop et al.
5,569,161 A 10/1996 Ebling et al.
5,569,270 A 10/1996 Weng
5,569,284 A 10/1996 Young et al.
5,571,090 A 11/1996 Sherts
5,571,100 A 11/1996 Goble et al.
5,571,116 A 11/1996 Bolanos et al.
5,571,285 A 11/1996 Chow et al.
5,571,488 A 11/1996 Beerstecher et al.
5,573,169 A 11/1996 Green et al.
5,573,543 A 11/1996 Akopov et al.
5,574,431 A 11/1996 McKeown et al.
5,575,054 A 11/1996 Klinzing et al.
5,575,789 A 11/1996 Bell et al.
5,575,799 A 11/1996 Bolanos et al.
5,575,803 A 11/1996 Cooper et al.
5,575,805 A 11/1996 Li
5,577,654 A 11/1996 Bishop

(56) **References Cited**

U.S. PATENT DOCUMENTS

5,578,052 A 11/1996 Koros et al.
5,579,978 A 12/1996 Green et al.
5,580,067 A 12/1996 Hamblin et al.
5,582,611 A 12/1996 Tsuruta et al.
5,582,617 A 12/1996 Klieman et al.
5,582,907 A 12/1996 Pall
5,583,114 A 12/1996 Barrows et al.
5,584,425 A 12/1996 Savage et al.
5,586,711 A 12/1996 Plyley et al.
5,588,579 A 12/1996 Schnut et al.
5,588,580 A 12/1996 Paul et al.
5,588,581 A 12/1996 Conlon et al.
5,591,170 A 1/1997 Spievack et al.
5,591,187 A 1/1997 Dekel
5,597,107 A 1/1997 Knodel et al.
5,599,151 A 2/1997 Daum et al.
5,599,279 A 2/1997 Slotman et al.
5,599,344 A 2/1997 Paterson
5,599,350 A 2/1997 Schulze et al.
5,599,852 A 2/1997 Scopelianos et al.
5,601,224 A 2/1997 Bishop et al.
5,601,573 A 2/1997 Fogelberg et al.
5,601,604 A 2/1997 Vincent
5,602,449 A 2/1997 Krause et al.
5,603,443 A 2/1997 Clark et al.
5,605,272 A 2/1997 Witt et al.
5,605,273 A 2/1997 Hamblin et al.
5,607,094 A 3/1997 Clark et al.
5,607,095 A 3/1997 Smith et al.
5,607,433 A 3/1997 Polla et al.
5,607,450 A 3/1997 Zvenyatsky et al.
5,607,474 A 3/1997 Athanasiou et al.
5,609,285 A 3/1997 Grant et al.
5,609,601 A 3/1997 Kolesa et al.
5,611,709 A 3/1997 McAnulty
5,613,499 A 3/1997 Palmer et al.
5,613,937 A 3/1997 Garrison et al.
5,613,966 A 3/1997 Makower et al.
5,614,887 A 3/1997 Buchbinder
5,615,820 A 4/1997 Viola
5,618,294 A 4/1997 Aust et al.
5,618,303 A 4/1997 Marlow et al.
5,618,307 A 4/1997 Donlon et al.
5,619,992 A 4/1997 Guthrie et al.
5,620,289 A 4/1997 Curry
5,620,326 A 4/1997 Younker
5,620,452 A 4/1997 Yoon
5,624,398 A 4/1997 Smith et al.
5,624,452 A 4/1997 Yates
5,626,587 A 5/1997 Bishop et al.
5,626,595 A 5/1997 Sklar et al.
5,628,446 A 5/1997 Geiste et al.
5,628,743 A 5/1997 Cimino
5,628,745 A 5/1997 Bek
5,630,539 A 5/1997 Plyley et al.
5,630,540 A 5/1997 Blewett
5,630,541 A 5/1997 Williamson, IV et al.
5,630,782 A 5/1997 Adair
5,632,432 A 5/1997 Schulze et al.
5,632,433 A 5/1997 Grant et al.
5,633,374 A 5/1997 Humphrey et al.
5,634,584 A 6/1997 Okorocha et al.
5,636,779 A 6/1997 Palmer
5,636,780 A 6/1997 Green et al.
5,639,008 A 6/1997 Gallagher et al.
D381,077 S 7/1997 Hunt
5,643,291 A 7/1997 Pier et al.
5,643,294 A 7/1997 Tovey et al.
5,643,319 A 7/1997 Green et al.
5,645,209 A 7/1997 Green et al.
5,647,526 A 7/1997 Green et al.
5,647,869 A 7/1997 Goble et al.
5,649,937 A 7/1997 Bito et al.
5,649,956 A 7/1997 Jensen et al.
5,651,491 A 7/1997 Heaton et al.
5,651,762 A 7/1997 Bridges
5,651,821 A 7/1997 Uchida
5,653,373 A 8/1997 Green et al.
5,653,374 A 8/1997 Young et al.
5,653,677 A 8/1997 Okada et al.
5,653,721 A 8/1997 Knodel et al.
5,655,698 A 8/1997 Yoon
5,657,417 A 8/1997 Di Troia
5,657,429 A 8/1997 Wang et al.
5,657,921 A 8/1997 Young et al.
5,658,238 A 8/1997 Suzuki et al.
5,658,281 A 8/1997 Heard
5,658,298 A 8/1997 Vincent et al.
5,658,300 A 8/1997 Bito et al.
5,658,307 A 8/1997 Exconde
5,662,258 A 9/1997 Knodel et al.
5,662,260 A 9/1997 Yoon
5,662,662 A 9/1997 Bishop et al.
5,662,667 A 9/1997 Knodel
5,665,085 A 9/1997 Nardella
5,667,517 A 9/1997 Hooven
5,667,526 A 9/1997 Levin
5,667,527 A 9/1997 Cook
5,669,544 A 9/1997 Schulze et al.
5,669,904 A 9/1997 Platt, Jr. et al.
5,669,907 A 9/1997 Platt, Jr. et al.
5,669,918 A 9/1997 Balazs et al.
5,673,840 A 10/1997 Schulze et al.
5,673,841 A 10/1997 Schulze et al.
5,673,842 A 10/1997 Bittner et al.
5,674,286 A 10/1997 D'Alessio et al.
5,678,748 A 10/1997 Plyley et al.
5,680,981 A 10/1997 Mililli et al.
5,680,982 A 10/1997 Schulze et al.
5,680,983 A 10/1997 Plyley et al.
5,681,341 A 10/1997 Lunsford et al.
5,683,349 A 11/1997 Makower et al.
5,685,474 A 11/1997 Seeber
5,686,090 A 11/1997 Schilder et al.
5,688,270 A 11/1997 Yates et al.
5,690,269 A 11/1997 Bolanos et al.
5,692,668 A 12/1997 Schulze et al.
5,693,020 A 12/1997 Rauh
5,693,042 A 12/1997 Boiarski et al.
5,693,051 A 12/1997 Schulze et al.
5,695,494 A 12/1997 Becker
5,695,502 A 12/1997 Pier et al.
5,695,504 A 12/1997 Gifford, III et al.
5,695,524 A 12/1997 Kelley et al.
5,697,542 A 12/1997 Knodel et al.
5,697,543 A 12/1997 Burdorff
5,697,909 A 12/1997 Eggers et al.
5,697,943 A 12/1997 Sauer et al.
5,700,270 A 12/1997 Peyser et al.
5,700,276 A 12/1997 Benecke
5,702,387 A 12/1997 Arts et al.
5,702,408 A 12/1997 Wales et al.
5,702,409 A 12/1997 Rayburn et al.
5,704,087 A 1/1998 Strub
5,704,534 A 1/1998 Huitema et al.
5,706,997 A 1/1998 Green et al.
5,706,998 A 1/1998 Plyley et al.
5,707,392 A 1/1998 Kortenbach
5,709,334 A 1/1998 Sorrentino et al.
5,709,335 A 1/1998 Heck
5,709,680 A 1/1998 Yates et al.
5,709,706 A 1/1998 Kienzle et al.
5,711,472 A 1/1998 Bryan
5,712,460 A 1/1998 Carr et al.
5,713,128 A 2/1998 Schrenk et al.
5,713,505 A 2/1998 Huitema
5,713,895 A 2/1998 Lontine et al.
5,713,896 A 2/1998 Nardella
5,713,920 A 2/1998 Bezwada et al.
5,715,604 A 2/1998 Lanzoni
5,715,987 A 2/1998 Kelley et al.
5,715,988 A 2/1998 Palmer
5,716,366 A 2/1998 Yates
5,718,359 A 2/1998 Palmer et al.

(56) **References Cited**

U.S. PATENT DOCUMENTS


| | | | |
|---|---|---|---|
| 5,718,360 | A | 2/1998 | Green et al. |
| 5,718,548 | A | 2/1998 | Cotellessa |
| 5,718,714 | A | 2/1998 | Livneh |
| 5,720,744 | A | 2/1998 | Eggleston et al. |
| D393,067 | S | 3/1998 | Geary et al. |
| 5,724,025 | A | 3/1998 | Tavori |
| 5,725,536 | A | 3/1998 | Oberlin et al. |
| 5,725,554 | A | 3/1998 | Simon et al. |
| 5,728,110 | A | 3/1998 | Vidal et al. |
| 5,728,113 | A | 3/1998 | Sherts |
| 5,728,121 | A | 3/1998 | Bimbo et al. |
| 5,730,758 | A | 3/1998 | Allgeyer |
| 5,732,821 | A | 3/1998 | Stone et al. |
| 5,732,871 | A | 3/1998 | Clark et al. |
| 5,732,872 | A | 3/1998 | Bolduc et al. |
| 5,733,308 | A | 3/1998 | Daugherty et al. |
| 5,735,445 | A | 4/1998 | Vidal et al. |
| 5,735,848 | A | 4/1998 | Yates et al. |
| 5,735,874 | A | 4/1998 | Measamer et al. |
| 5,738,474 | A | 4/1998 | Blewett |
| 5,738,629 | A | 4/1998 | Moll et al. |
| 5,738,648 | A | 4/1998 | Lands et al. |
| 5,741,271 | A | 4/1998 | Nakao et al. |
| 5,743,456 | A | 4/1998 | Jones et al. |
| 5,747,953 | A | 5/1998 | Philipp |
| 5,749,889 | A | 5/1998 | Bacich et al. |
| 5,749,893 | A | 5/1998 | Vidal et al. |
| 5,749,968 | A | 5/1998 | Melanson et al. |
| 5,752,644 | A | 5/1998 | Bolanos et al. |
| 5,752,965 | A | 5/1998 | Francis et al. |
| 5,752,970 | A | 5/1998 | Yoon |
| 5,755,717 | A | 5/1998 | Yates et al. |
| 5,758,814 | A | 6/1998 | Gallagher et al. |
| 5,762,255 | A | 6/1998 | Chrisman et al. |
| 5,762,256 | A | 6/1998 | Mastri et al. |
| 5,766,188 | A | 6/1998 | Igaki |
| 5,766,205 | A | 6/1998 | Zvenyatsky et al. |
| 5,769,303 | A | 6/1998 | Knodel et al. |
| 5,769,748 | A | 6/1998 | Eyerly et al. |
| 5,769,791 | A | 6/1998 | Benaron et al. |
| 5,769,892 | A | 6/1998 | Kingwell |
| 5,772,379 | A | 6/1998 | Evensen |
| 5,772,578 | A | 6/1998 | Heimberger et al. |
| 5,772,659 | A | 6/1998 | Becker et al. |
| 5,776,130 | A | 7/1998 | Buysse et al. |
| 5,778,939 | A | 7/1998 | Hok-Yin |
| 5,779,130 | A | 7/1998 | Alesi et al. |
| 5,779,131 | A | 7/1998 | Knodel et al. |
| 5,779,132 | A | 7/1998 | Knodel et al. |
| 5,782,396 | A | 7/1998 | Mastri et al. |
| 5,782,397 | A | 7/1998 | Koukline |
| 5,782,748 | A | 7/1998 | Palmer et al. |
| 5,782,749 | A | 7/1998 | Riza |
| 5,782,859 | A | 7/1998 | Nicholas et al. |
| 5,784,934 | A | 7/1998 | Izumisawa |
| 5,785,232 | A | 7/1998 | Vidal et al. |
| 5,785,647 | A | 7/1998 | Tompkins et al. |
| 5,787,897 | A | 8/1998 | Kieturakis |
| 5,791,231 | A | 8/1998 | Cohn et al. |
| 5,792,135 | A | 8/1998 | Madhani et al. |
| 5,792,162 | A | 8/1998 | Jolly et al. |
| 5,792,165 | A | 8/1998 | Klieman et al. |
| 5,792,573 | A | 8/1998 | Pitzen et al. |
| 5,794,834 | A | 8/1998 | Hamblin et al. |
| 5,796,188 | A | 8/1998 | Bays |
| 5,797,536 | A | 8/1998 | Smith et al. |
| 5,797,537 | A | 8/1998 | Oberlin et al. |
| 5,797,538 | A | 8/1998 | Heaton et al. |
| 5,797,637 | A | 8/1998 | Ervin |
| 5,797,906 | A | 8/1998 | Rhum et al. |
| 5,797,927 | A | 8/1998 | Yoon |
| 5,797,941 | A | 8/1998 | Schulze et al. |
| 5,797,959 | A | 8/1998 | Castro et al. |
| 5,799,857 | A | 9/1998 | Robertson et al. |
| 5,800,379 | A | 9/1998 | Edwards |
| 5,800,423 | A | 9/1998 | Jensen |
| 5,804,726 | A | 9/1998 | Geib et al. |
| 5,804,936 | A | 9/1998 | Brodsky et al. |
| 5,806,676 | A | 9/1998 | Wasgien |
| 5,807,376 | A | 9/1998 | Viola et al. |
| 5,807,378 | A | 9/1998 | Jensen et al. |
| 5,807,393 | A | 9/1998 | Williamson, IV et al. |
| 5,809,441 | A | 9/1998 | McKee |
| 5,810,721 | A | 9/1998 | Mueller et al. |
| 5,810,811 | A | 9/1998 | Yates et al. |
| 5,810,846 | A | 9/1998 | Virnich et al. |
| 5,810,855 | A | 9/1998 | Rayburn et al. |
| 5,813,813 | A | 9/1998 | Daum et al. |
| 5,814,055 | A | 9/1998 | Knodel et al. |
| 5,814,057 | A | 9/1998 | Oi et al. |
| 5,816,471 | A | 10/1998 | Plyley et al. |
| 5,817,084 | A | 10/1998 | Jensen |
| 5,817,091 | A | 10/1998 | Nardella et al. |
| 5,817,093 | A | 10/1998 | Williamson, IV et al. |
| 5,817,109 | A | 10/1998 | McGarry et al. |
| 5,817,119 | A | 10/1998 | Klieman et al. |
| 5,820,009 | A | 10/1998 | Melling et al. |
| 5,823,066 | A | 10/1998 | Huitema et al. |
| 5,824,333 | A | 10/1998 | Scopelianos et al. |
| 5,826,776 | A | 10/1998 | Schulze et al. |
| 5,827,271 | A | 10/1998 | Buysse et al. |
| 5,827,298 | A | 10/1998 | Hart et al. |
| 5,829,662 | A | 11/1998 | Allen et al. |
| 5,830,598 | A | 11/1998 | Patterson |
| 5,833,690 | A | 11/1998 | Yates et al. |
| 5,833,695 | A | 11/1998 | Yoon |
| 5,833,696 | A | 11/1998 | Whitfield et al. |
| 5,836,503 | A | 11/1998 | Ehrenfels et al. |
| 5,836,960 | A | 11/1998 | Kolesa et al. |
| 5,839,369 | A | 11/1998 | Chatterjee et al. |
| 5,839,639 | A | 11/1998 | Sauer et al. |
| 5,843,021 | A | 12/1998 | Edwards et al. |
| 5,843,096 | A | 12/1998 | Igaki et al. |
| 5,843,097 | A | 12/1998 | Mayenberger et al. |
| 5,843,122 | A | 12/1998 | Riza |
| 5,843,132 | A | 12/1998 | Ilvento |
| 5,843,169 | A | 12/1998 | Taheri |
| 5,846,254 | A | 12/1998 | Schulze et al. |
| 5,847,566 | A | 12/1998 | Marritt et al. |
| 5,849,011 | A | 12/1998 | Jones et al. |
| 5,849,020 | A | 12/1998 | Long et al. |
| 5,849,023 | A | 12/1998 | Mericle |
| 5,851,179 | A | 12/1998 | Ritson et al. |
| 5,853,366 | A | 12/1998 | Dowlatshahi |
| 5,855,311 | A | 1/1999 | Hamblin et al. |
| 5,855,583 | A | 1/1999 | Wang et al. |
| 5,860,581 | A | 1/1999 | Robertson et al. |
| 5,860,975 | A | 1/1999 | Goble et al. |
| 5,865,361 | A | 2/1999 | Milliman et al. |
| 5,865,638 | A | 2/1999 | Trafton |
| 5,868,361 | A | 2/1999 | Rinderer |
| 5,868,760 | A | 2/1999 | McGuckin, Jr. |
| 5,868,790 | A | 2/1999 | Vincent et al. |
| 5,871,135 | A | 2/1999 | Williamson, IV et al. |
| 5,873,885 | A | 2/1999 | Weidenbenner |
| 5,876,401 | A | 3/1999 | Schulze et al. |
| 5,878,193 | A | 3/1999 | Wang et al. |
| 5,878,607 | A | 3/1999 | Nunes et al. |
| 5,878,937 | A | 3/1999 | Green et al. |
| 5,878,938 | A | 3/1999 | Bittner et al. |
| 5,881,777 | A | 3/1999 | Bassi et al. |
| 5,891,094 | A | 4/1999 | Masterson et al. |
| 5,891,160 | A | 4/1999 | Williamson, IV et al. |
| 5,891,558 | A | 4/1999 | Bell et al. |
| 5,893,506 | A | 4/1999 | Powell |
| 5,893,835 | A | 4/1999 | Witt et al. |
| 5,893,878 | A | 4/1999 | Pierce |
| 5,894,979 | A | 4/1999 | Powell |
| 5,897,552 | A | 4/1999 | Edwards et al. |
| 5,897,562 | A | 4/1999 | Bolanos et al. |
| 5,899,824 | A | 5/1999 | Kurtz et al. |
| 5,899,914 | A | 5/1999 | Zirps et al. |
| 5,901,895 | A | 5/1999 | Heaton et al. |
| 5,902,312 | A | 5/1999 | Frater et al. |

(56) **References Cited**

U.S. PATENT DOCUMENTS


| | | | |
|---|---|---|---|
| 5,903,117 | A | 5/1999 | Gregory |
| 5,904,647 | A | 5/1999 | Ouchi |
| 5,904,693 | A | 5/1999 | Dicesare et al. |
| 5,904,702 | A | 5/1999 | Ek et al. |
| 5,906,577 | A | 5/1999 | Beane et al. |
| 5,906,625 | A | 5/1999 | Bito et al. |
| 5,907,211 | A | 5/1999 | Hall et al. |
| 5,908,402 | A | 6/1999 | Blythe |
| 5,908,427 | A | 6/1999 | McKean et al. |
| 5,909,062 | A | 6/1999 | Krietzman |
| 5,911,353 | A | 6/1999 | Bolanos et al. |
| 5,915,616 | A | 6/1999 | Viola et al. |
| 5,916,225 | A | 6/1999 | Kugel |
| 5,918,791 | A | 7/1999 | Sorrentino et al. |
| 5,919,198 | A | 7/1999 | Graves, Jr. et al. |
| 5,921,956 | A | 7/1999 | Grinberg et al. |
| 5,924,864 | A | 7/1999 | Loge et al. |
| 5,928,137 | A | 7/1999 | Green |
| 5,928,256 | A | 7/1999 | Riza |
| 5,931,847 | A | 8/1999 | Bittner et al. |
| 5,931,853 | A | 8/1999 | McEwen et al. |
| 5,937,951 | A | 8/1999 | Izuchukwu et al. |
| 5,938,667 | A | 8/1999 | Peyser et al. |
| 5,941,442 | A | 8/1999 | Geiste et al. |
| 5,941,890 | A | 8/1999 | Voegele et al. |
| 5,944,172 | A | 8/1999 | Hannula |
| 5,944,715 | A | 8/1999 | Goble et al. |
| 5,946,978 | A | 9/1999 | Yamashita |
| 5,947,984 | A | 9/1999 | Whipple |
| 5,947,996 | A | 9/1999 | Logeman |
| 5,948,030 | A | 9/1999 | Miller et al. |
| 5,948,429 | A | 9/1999 | Bell et al. |
| 5,951,301 | A | 9/1999 | Younker |
| 5,951,516 | A | 9/1999 | Bunyan |
| 5,951,552 | A | 9/1999 | Long et al. |
| 5,951,574 | A | 9/1999 | Stefanchik et al. |
| 5,951,581 | A | 9/1999 | Saadat et al. |
| 5,954,259 | A | 9/1999 | Viola et al. |
| 5,964,394 | A | 10/1999 | Robertson |
| 5,964,774 | A | 10/1999 | McKean et al. |
| 5,966,126 | A | 10/1999 | Szabo |
| 5,971,916 | A | 10/1999 | Koren |
| 5,973,221 | A | 10/1999 | Collyer et al. |
| D416,089 | S | 11/1999 | Barton et al. |
| 5,976,122 | A | 11/1999 | Madhani et al. |
| 5,977,746 | A | 11/1999 | Hershberger et al. |
| 5,980,248 | A | 11/1999 | Kusakabe et al. |
| 5,984,949 | A | 11/1999 | Levin |
| 5,988,479 | A | 11/1999 | Palmer |
| 5,990,379 | A | 11/1999 | Gregory |
| 5,993,466 | A | 11/1999 | Yoon |
| 5,997,528 | A | 12/1999 | Bisch et al. |
| 5,997,552 | A | 12/1999 | Person et al. |
| 6,001,108 | A | 12/1999 | Wang et al. |
| 6,003,517 | A | 12/1999 | Sheffield et al. |
| 6,004,319 | A | 12/1999 | Goble et al. |
| 6,004,335 | A | 12/1999 | Vaitekunas et al. |
| 6,007,521 | A | 12/1999 | Bidwell et al. |
| 6,010,054 | A | 1/2000 | Johnson et al. |
| 6,010,513 | A | 1/2000 | Tormala et al. |
| 6,010,520 | A | 1/2000 | Pattison |
| 6,012,494 | A | 1/2000 | Balazs |
| 6,013,076 | A | 1/2000 | Goble et al. |
| 6,015,406 | A | 1/2000 | Goble et al. |
| 6,015,417 | A | 1/2000 | Reynolds, Jr. |
| 6,017,322 | A | 1/2000 | Snoke et al. |
| 6,017,354 | A | 1/2000 | Culp et al. |
| 6,017,356 | A | 1/2000 | Frederick et al. |
| 6,018,227 | A | 1/2000 | Kumar et al. |
| 6,019,745 | A | 2/2000 | Gray |
| 6,022,352 | A | 2/2000 | Vandewalle |
| 6,023,641 | A | 2/2000 | Thompson |
| 6,024,708 | A | 2/2000 | Bales et al. |
| 6,024,741 | A | 2/2000 | Williamson, IV et al. |
| 6,024,748 | A | 2/2000 | Manzo et al. |
| 6,024,750 | A | 2/2000 | Mastri et al. |
| 6,024,764 | A | 2/2000 | Schroeppel |
| 6,027,501 | A | 2/2000 | Goble et al. |
| 6,030,384 | A | 2/2000 | Nezhat |
| 6,032,849 | A | 3/2000 | Mastri et al. |
| 6,033,105 | A | 3/2000 | Barker et al. |
| 6,033,378 | A | 3/2000 | Lundquist et al. |
| 6,033,399 | A | 3/2000 | Gines |
| 6,033,427 | A | 3/2000 | Lee |
| 6,036,667 | A | 3/2000 | Manna et al. |
| 6,037,724 | A | 3/2000 | Buss et al. |
| 6,037,927 | A | 3/2000 | Rosenberg |
| 6,039,733 | A | 3/2000 | Buysse et al. |
| 6,039,734 | A | 3/2000 | Goble |
| 6,042,601 | A | 3/2000 | Smith |
| 6,042,607 | A | 3/2000 | Williamson, IV et al. |
| 6,043,626 | A | 3/2000 | Snyder et al. |
| 6,045,560 | A | 4/2000 | McKean et al. |
| 6,047,861 | A | 4/2000 | Vidal et al. |
| 6,049,145 | A | 4/2000 | Austin et al. |
| 6,050,172 | A | 4/2000 | Corves et al. |
| 6,050,472 | A | 4/2000 | Shibata |
| 6,050,989 | A | 4/2000 | Fox et al. |
| 6,050,990 | A | 4/2000 | Tankovich et al. |
| 6,050,996 | A | 4/2000 | Schmaltz et al. |
| 6,053,390 | A | 4/2000 | Green et al. |
| 6,053,899 | A | 4/2000 | Slanda et al. |
| 6,053,922 | A | 4/2000 | Krause et al. |
| 6,054,142 | A | 4/2000 | Li et al. |
| RE36,720 | E | 5/2000 | Green et al. |
| 6,056,735 | A | 5/2000 | Okada et al. |
| 6,056,746 | A | 5/2000 | Goble et al. |
| 6,059,806 | A | 5/2000 | Hoegerle |
| 6,062,360 | A | 5/2000 | Shields |
| 6,063,025 | A | 5/2000 | Bridges et al. |
| 6,063,050 | A | 5/2000 | Manna et al. |
| 6,063,095 | A | 5/2000 | Wang et al. |
| 6,063,097 | A | 5/2000 | Oi et al. |
| 6,063,098 | A | 5/2000 | Houser et al. |
| 6,065,679 | A | 5/2000 | Levie et al. |
| 6,065,919 | A | 5/2000 | Peck |
| 6,066,132 | A | 5/2000 | Chen et al. |
| 6,066,151 | A | 5/2000 | Miyawaki et al. |
| 6,068,627 | A | 5/2000 | Orszulak et al. |
| 6,071,233 | A | 6/2000 | Ishikawa et al. |
| 6,074,386 | A | 6/2000 | Goble et al. |
| 6,074,401 | A | 6/2000 | Gardiner et al. |
| 6,077,280 | A | 6/2000 | Fossum |
| 6,077,286 | A | 6/2000 | Cuschieri et al. |
| 6,077,290 | A | 6/2000 | Marini |
| 6,079,606 | A | 6/2000 | Milliman et al. |
| 6,080,181 | A | 6/2000 | Jensen et al. |
| 6,082,577 | A | 7/2000 | Coates et al. |
| 6,083,191 | A | 7/2000 | Rose |
| 6,083,223 | A | 7/2000 | Baker |
| 6,083,234 | A | 7/2000 | Nicholas et al. |
| 6,083,242 | A | 7/2000 | Cook |
| 6,086,544 | A | 7/2000 | Hibner et al. |
| 6,086,600 | A | 7/2000 | Kortenbach |
| 6,090,106 | A | 7/2000 | Goble et al. |
| 6,093,186 | A | 7/2000 | Goble |
| 6,099,537 | A | 8/2000 | Sugai et al. |
| 6,099,551 | A | 8/2000 | Gabbay |
| 6,102,271 | A | 8/2000 | Longo et al. |
| 6,104,162 | A | 8/2000 | Sainsbury et al. |
| 6,104,304 | A | 8/2000 | Clark et al. |
| 6,106,511 | A | 8/2000 | Jensen |
| 6,109,500 | A | 8/2000 | Alli et al. |
| 6,110,187 | A | 8/2000 | Donlon |
| 6,113,618 | A | 9/2000 | Nic |
| 6,117,148 | A | 9/2000 | Ravo et al. |
| 6,117,158 | A | 9/2000 | Measamer et al. |
| 6,119,913 | A | 9/2000 | Adams et al. |
| 6,120,433 | A | 9/2000 | Mizuno et al. |
| 6,120,462 | A | 9/2000 | Hibner et al. |
| 6,123,241 | A | 9/2000 | Walter et al. |
| 6,123,701 | A | 9/2000 | Nezhat |
| H001904 | H | 10/2000 | Yates et al. |
| 6,126,058 | A | 10/2000 | Adams et al. |

(56) **References Cited**

U.S. PATENT DOCUMENTS

6,126,359 A 10/2000 Dittrich et al.
6,126,670 A 10/2000 Walker et al.
6,131,789 A 10/2000 Schulze et al.
6,131,790 A 10/2000 Piraka
6,132,368 A 10/2000 Cooper
6,139,546 A 10/2000 Koenig et al.
6,142,149 A 11/2000 Steen
6,142,933 A 11/2000 Longo et al.
6,147,135 A 11/2000 Yuan et al.
6,149,660 A 11/2000 Laufer et al.
6,151,323 A 11/2000 O'Connell et al.
6,152,935 A 11/2000 Kammerer et al.
6,155,473 A 12/2000 Tompkins et al.
6,156,056 A 12/2000 Kearns et al.
6,157,169 A 12/2000 Lee
6,159,146 A 12/2000 El Gazayerli
6,159,200 A 12/2000 Verdura et al.
6,159,224 A 12/2000 Yoon
6,162,208 A 12/2000 Hipps
6,162,220 A 12/2000 Nezhat
6,162,537 A 12/2000 Martin et al.
6,165,175 A 12/2000 Wampler et al.
6,165,184 A 12/2000 Verdura et al.
6,165,188 A 12/2000 Saadat et al.
6,167,185 A 12/2000 Smiley et al.
6,168,605 B1 1/2001 Measamer et al.
6,171,305 B1 1/2001 Sherman
6,171,316 B1 1/2001 Kovac et al.
6,171,330 B1 1/2001 Benchetrit
6,173,074 B1 1/2001 Russo
6,174,308 B1 1/2001 Goble et al.
6,174,309 B1 1/2001 Wrublewski et al.
6,174,318 B1 1/2001 Bates et al.
6,175,290 B1 1/2001 Forsythe et al.
6,179,195 B1 1/2001 Adams et al.
6,179,776 B1 1/2001 Adams et al.
6,181,105 B1 1/2001 Cutolo et al.
6,182,673 B1 2/2001 Kindermann et al.
6,185,356 B1 2/2001 Parker et al.
6,186,142 B1 2/2001 Schmidt et al.
6,187,003 B1 2/2001 Buysse et al.
6,190,386 B1 2/2001 Rydell
6,193,129 B1 2/2001 Bittner et al.
6,197,042 B1 3/2001 Ginn et al.
6,200,330 B1 3/2001 Benderev et al.
6,202,914 B1 3/2001 Geiste et al.
6,206,894 B1 3/2001 Thompson et al.
6,206,897 B1 3/2001 Jamiolkowski et al.
6,206,904 B1 3/2001 Ouchi
6,209,414 B1 4/2001 Uneme
6,210,403 B1 4/2001 Klicek
6,213,999 B1 4/2001 Platt, Jr. et al.
6,214,028 B1 4/2001 Yoon et al.
6,220,368 B1 4/2001 Ark et al.
6,221,007 B1 4/2001 Green
6,221,023 B1 4/2001 Matsuba et al.
6,223,100 B1 4/2001 Green
6,223,835 B1 5/2001 Habedank et al.
6,224,617 B1 5/2001 Saadat et al.
6,228,080 B1 5/2001 Gines
6,228,081 B1 5/2001 Goble
6,228,083 B1 5/2001 Lands et al.
6,228,084 B1 5/2001 Kirwan, Jr.
6,228,089 B1 5/2001 Wahrburg
6,228,098 B1 5/2001 Kayan et al.
6,231,565 B1 5/2001 Tovey et al.
6,234,178 B1 5/2001 Goble et al.
6,237,604 B1 5/2001 Burnside et al.
6,238,384 B1 5/2001 Peer
6,241,139 B1 6/2001 Milliman et al.
6,241,140 B1 6/2001 Adams et al.
6,241,723 B1 6/2001 Heim et al.
6,245,084 B1 6/2001 Mark et al.
6,248,116 B1 6/2001 Chevillon et al.
6,248,117 B1 6/2001 Blatter
6,249,076 B1 6/2001 Madden et al.
6,249,105 B1 6/2001 Andrews et al.
6,250,532 B1 6/2001 Green et al.
6,251,485 B1 6/2001 Harris et al.
6,254,534 B1 7/2001 Butler et al.
6,254,619 B1 7/2001 Garabet et al.
6,254,642 B1 7/2001 Taylor
6,258,107 B1 7/2001 Balazs et al.
6,261,286 B1 7/2001 Goble et al.
6,261,679 B1 7/2001 Chen et al.
6,264,086 B1 7/2001 McGuckin, Jr.
6,264,087 B1 7/2001 Whitman
6,264,617 B1 7/2001 Bales et al.
6,270,508 B1 8/2001 Klieman et al.
6,270,916 B1 8/2001 Sink et al.
6,273,876 B1 8/2001 Klima et al.
6,273,897 B1 8/2001 Dalessandro et al.
6,277,114 B1 8/2001 Bullivant et al.
6,280,407 B1 8/2001 Manna et al.
6,293,927 B1 9/2001 McGuckin, Jr.
6,293,942 B1 9/2001 Goble et al.
6,296,640 B1 10/2001 Wampler et al.
6,302,311 B1 10/2001 Adams et al.
6,302,743 B1 10/2001 Chiu et al.
6,305,891 B1 10/2001 Burlingame
6,306,134 B1 10/2001 Goble et al.
6,306,149 B1 10/2001 Meade
6,306,424 B1 10/2001 Vyakarnam et al.
6,309,397 B1 10/2001 Julian et al.
6,309,403 B1 10/2001 Minor et al.
6,312,435 B1 11/2001 Wallace et al.
6,315,184 B1 11/2001 Whitman
6,319,510 B1 11/2001 Yates
6,320,123 B1 11/2001 Reimers
6,322,494 B1 11/2001 Bullivant et al.
6,324,339 B1 11/2001 Hudson et al.
6,325,799 B1 12/2001 Goble
6,325,805 B1 12/2001 Ogilvie et al.
6,325,810 B1 12/2001 Hamilton et al.
6,328,498 B1 12/2001 Mersch
6,330,965 B1 12/2001 Milliman et al.
6,331,181 B1 12/2001 Tierney et al.
6,331,761 B1 12/2001 Kumar et al.
6,333,029 B1 12/2001 Vyakarnam et al.
6,334,860 B1 1/2002 Dorn
6,334,861 B1 1/2002 Chandler et al.
6,336,926 B1 1/2002 Goble
6,338,737 B1 1/2002 Toledano
6,343,731 B1 2/2002 Adams et al.
6,346,077 B1 2/2002 Taylor et al.
6,348,061 B1 2/2002 Whitman
D454,951 S 3/2002 Bon
6,352,503 B1 3/2002 Matsui et al.
6,352,532 B1 3/2002 Kramer et al.
6,355,699 B1 3/2002 Vyakarnam et al.
6,356,072 B1 3/2002 Chass
6,358,224 B1 3/2002 Tims et al.
6,358,263 B2 3/2002 Mark et al.
6,358,459 B1 3/2002 Ziegler et al.
6,364,877 B1 4/2002 Goble et al.
6,364,888 B1 4/2002 Niemeyer et al.
6,370,981 B2 4/2002 Watarai
6,371,114 B1 4/2002 Schmidt et al.
6,373,152 B1 4/2002 Wang et al.
6,377,011 B1 4/2002 Ben-Ur
6,383,201 B1 5/2002 Dong
6,387,092 B1 5/2002 Burnside et al.
6,387,113 B1 5/2002 Hawkins et al.
6,387,114 B2 5/2002 Adams
6,391,038 B2 5/2002 Vargas et al.
6,392,854 B1 5/2002 O'Gorman
6,394,998 B1 5/2002 Wallace et al.
6,398,779 B1 6/2002 Buysse et al.
6,398,781 B1 6/2002 Goble et al.
6,398,797 B2 6/2002 Bombard et al.
6,402,766 B2 6/2002 Bowman et al.
6,406,440 B1 6/2002 Stefanchik
6,406,472 B1 6/2002 Jensen
6,409,724 B1 6/2002 Penny et al.

(56) **References Cited**

U.S. PATENT DOCUMENTS


| | | | |
|---|---|---|---|
| H002037 | H | 7/2002 | Yates et al. |
| 6,412,639 | B1 | 7/2002 | Hickey |
| 6,413,274 | B1 | 7/2002 | Pedros |
| 6,416,486 | B1 | 7/2002 | Wampler |
| 6,416,509 | B1 | 7/2002 | Goble et al. |
| 6,419,695 | B1 | 7/2002 | Gabbay |
| 6,423,079 | B1 | 7/2002 | Blake, III |
| RE37,814 | E | 8/2002 | Allgeyer |
| 6,428,070 | B1 | 8/2002 | Takanashi et al. |
| 6,428,487 | B1 | 8/2002 | Burdorff et al. |
| 6,429,611 | B1 | 8/2002 | Li |
| 6,430,298 | B1 | 8/2002 | Kettl et al. |
| 6,432,065 | B1 | 8/2002 | Burdorff et al. |
| 6,436,097 | B1 | 8/2002 | Nardella |
| 6,436,107 | B1 | 8/2002 | Wang et al. |
| 6,436,110 | B2 | 8/2002 | Bowman et al. |
| 6,436,122 | B1 | 8/2002 | Frank et al. |
| 6,439,439 | B1 | 8/2002 | Rickard et al. |
| 6,439,446 | B1 | 8/2002 | Perry et al. |
| 6,440,146 | B2 | 8/2002 | Nicholas et al. |
| 6,441,577 | B2 | 8/2002 | Blumenkranz et al. |
| D462,758 | S | 9/2002 | Epstein et al. |
| 6,443,973 | B1 | 9/2002 | Whitman |
| 6,445,530 | B1 | 9/2002 | Baker |
| 6,447,518 | B1 | 9/2002 | Krause et al. |
| 6,447,523 | B1 | 9/2002 | Middleman et al. |
| 6,447,799 | B1 | 9/2002 | Ullman |
| 6,447,864 | B2 | 9/2002 | Johnson et al. |
| 6,450,391 | B1 | 9/2002 | Kayan et al. |
| 6,450,989 | B2 | 9/2002 | Dubrul et al. |
| 6,454,781 | B1 | 9/2002 | Witt et al. |
| 6,458,077 | B1 | 10/2002 | Boebel et al. |
| 6,458,147 | B1 | 10/2002 | Cruise et al. |
| 6,460,627 | B1 | 10/2002 | Below et al. |
| 6,468,275 | B1 | 10/2002 | Wampler et al. |
| 6,468,286 | B2 | 10/2002 | Mastri et al. |
| 6,471,106 | B1 | 10/2002 | Reining |
| 6,471,659 | B2 | 10/2002 | Eggers et al. |
| 6,478,210 | B2 | 11/2002 | Adams et al. |
| 6,482,200 | B2 | 11/2002 | Shippert |
| 6,482,217 | B1 | 11/2002 | Pintor et al. |
| 6,485,490 | B2 | 11/2002 | Wampler et al. |
| 6,485,503 | B2 | 11/2002 | Jacobs et al. |
| 6,485,667 | B1 | 11/2002 | Tan |
| 6,486,286 | B1 | 11/2002 | McGall et al. |
| 6,488,196 | B1 | 12/2002 | Fenton, Jr. |
| 6,488,197 | B1 | 12/2002 | Whitman |
| 6,488,659 | B1 | 12/2002 | Rosenman |
| 6,491,201 | B1 | 12/2002 | Whitman |
| 6,491,690 | B1 | 12/2002 | Goble et al. |
| 6,491,701 | B2 | 12/2002 | Tierney et al. |
| 6,492,785 | B1 | 12/2002 | Kasten et al. |
| 6,494,885 | B1 | 12/2002 | Dhindsa |
| 6,494,896 | B1 | 12/2002 | D'Alessio et al. |
| 6,498,480 | B1 | 12/2002 | Manara |
| 6,500,176 | B1 | 12/2002 | Truckai et al. |
| 6,500,194 | B2 | 12/2002 | Benderev et al. |
| 6,503,139 | B2 | 1/2003 | Coral |
| 6,503,257 | B2 | 1/2003 | Grant et al. |
| 6,503,259 | B2 | 1/2003 | Huxel et al. |
| 6,505,768 | B2 | 1/2003 | Whitman |
| 6,506,197 | B1 | 1/2003 | Rollero et al. |
| 6,510,854 | B2 | 1/2003 | Goble |
| 6,511,468 | B1 | 1/2003 | Cragg et al. |
| 6,512,360 | B1 | 1/2003 | Goto et al. |
| 6,514,252 | B2 | 2/2003 | Nezhat et al. |
| 6,516,073 | B1 | 2/2003 | Schulz et al. |
| 6,517,528 | B1 | 2/2003 | Pantages et al. |
| 6,517,535 | B2 | 2/2003 | Edwards |
| 6,517,565 | B1 | 2/2003 | Whitman et al. |
| 6,517,566 | B1 | 2/2003 | Hovland et al. |
| 6,520,971 | B1 | 2/2003 | Perry et al. |
| 6,520,972 | B2 | 2/2003 | Peters |
| 6,522,101 | B2 | 2/2003 | Malackowski |
| 6,524,180 | B1 | 2/2003 | Simms et al. |
| 6,527,782 | B2 | 3/2003 | Hogg et al. |
| 6,527,785 | B2 | 3/2003 | Sancoff et al. |
| 6,532,958 | B1 | 3/2003 | Buan et al. |
| 6,533,157 | B1 | 3/2003 | Whitman |
| 6,533,723 | B1 | 3/2003 | Lockery et al. |
| 6,533,784 | B2 | 3/2003 | Truckai et al. |
| 6,535,764 | B2 | 3/2003 | Imran et al. |
| 6,539,816 | B2 | 4/2003 | Kogiso et al. |
| 6,543,456 | B1 | 4/2003 | Freeman |
| 6,545,384 | B1 | 4/2003 | Pelrine et al. |
| 6,547,786 | B1 | 4/2003 | Goble |
| 6,550,546 | B2 | 4/2003 | Thurler et al. |
| 6,551,333 | B2 | 4/2003 | Kuhns et al. |
| 6,554,861 | B2 | 4/2003 | Knox et al. |
| 6,555,770 | B2 | 4/2003 | Kawase |
| 6,558,378 | B2 | 5/2003 | Sherman et al. |
| 6,558,379 | B1 | 5/2003 | Batchelor et al. |
| 6,558,429 | B2 | 5/2003 | Taylor |
| 6,561,187 | B2 | 5/2003 | Schmidt et al. |
| 6,565,560 | B1 | 5/2003 | Goble et al. |
| 6,566,619 | B2 | 5/2003 | Gillman et al. |
| 6,569,085 | B2 | 5/2003 | Kortenbach et al. |
| 6,569,171 | B2 | 5/2003 | DeGuillebon et al. |
| 6,578,751 | B2 | 6/2003 | Hartwick |
| 6,582,364 | B2 | 6/2003 | Butler et al. |
| 6,582,427 | B1 | 6/2003 | Goble et al. |
| 6,582,441 | B1 | 6/2003 | He et al. |
| 6,583,533 | B2 | 6/2003 | Pelrine et al. |
| 6,585,144 | B2 | 7/2003 | Adams et al. |
| 6,585,664 | B2 | 7/2003 | Burdorff et al. |
| 6,587,750 | B2 | 7/2003 | Gerbi et al. |
| 6,588,643 | B2 | 7/2003 | Bolduc et al. |
| 6,588,931 | B2 | 7/2003 | Betzner et al. |
| 6,589,118 | B1 | 7/2003 | Soma et al. |
| 6,589,164 | B1 | 7/2003 | Flaherty |
| 6,592,538 | B1 | 7/2003 | Hotchkiss et al. |
| 6,592,597 | B2 | 7/2003 | Grant et al. |
| 6,594,552 | B1 | 7/2003 | Nowlin et al. |
| 6,596,296 | B1 | 7/2003 | Nelson et al. |
| 6,596,304 | B1 | 7/2003 | Bayon et al. |
| 6,596,432 | B2 | 7/2003 | Kawakami et al. |
| 6,599,323 | B2 | 7/2003 | Melican et al. |
| D478,665 | S | 8/2003 | Isaacs et al. |
| D478,986 | S | 8/2003 | Johnston et al. |
| 6,601,749 | B2 | 8/2003 | Sullivan et al. |
| 6,602,252 | B2 | 8/2003 | Mollenauer |
| 6,602,262 | B2 | 8/2003 | Griego et al. |
| 6,603,050 | B2 | 8/2003 | Heaton |
| 6,605,078 | B2 | 8/2003 | Adams |
| 6,605,669 | B2 | 8/2003 | Awokola et al. |
| 6,605,911 | B1 | 8/2003 | Klesing |
| 6,607,475 | B2 | 8/2003 | Doyle et al. |
| 6,611,793 | B1 | 8/2003 | Burnside et al. |
| 6,613,069 | B2 | 9/2003 | Boyd et al. |
| 6,616,686 | B2 | 9/2003 | Coleman et al. |
| 6,619,529 | B2 | 9/2003 | Green et al. |
| 6,620,111 | B2 | 9/2003 | Stephens et al. |
| 6,620,166 | B1 | 9/2003 | Wenstrom, Jr. et al. |
| 6,625,517 | B1 | 9/2003 | Bogdanov et al. |
| 6,626,834 | B2 | 9/2003 | Dunne et al. |
| 6,629,630 | B2 | 10/2003 | Adams |
| 6,629,974 | B2 | 10/2003 | Penny et al. |
| 6,629,988 | B2 | 10/2003 | Weadock |
| 6,635,838 | B1 | 10/2003 | Kornelson |
| 6,636,412 | B2 | 10/2003 | Smith |
| 6,638,108 | B2 | 10/2003 | Tachi |
| 6,638,285 | B2 | 10/2003 | Gabbay |
| 6,638,297 | B1 | 10/2003 | Huitema |
| RE38,335 | E | 11/2003 | Aust et al. |
| 6,641,528 | B2 | 11/2003 | Torii |
| 6,644,532 | B2 | 11/2003 | Green et al. |
| 6,645,201 | B1 | 11/2003 | Utley et al. |
| 6,646,307 | B1 | 11/2003 | Yu et al. |
| 6,648,816 | B2 | 11/2003 | Irion et al. |
| 6,648,901 | B2 | 11/2003 | Fleischman et al. |
| 6,652,595 | B1 | 11/2003 | Nicolo |
| D484,243 | S | 12/2003 | Ryan et al. |
| D484,595 | S | 12/2003 | Ryan et al. |
| D484,596 | S | 12/2003 | Ryan et al. |

(56) **References Cited**

U.S. PATENT DOCUMENTS

6,656,177 B2 12/2003 Truckai et al.
6,656,193 B2 12/2003 Grant et al.
6,659,940 B2 12/2003 Adler
6,663,623 B1 12/2003 Oyama et al.
6,663,641 B1 12/2003 Kovac et al.
6,666,854 B1 12/2003 Lange
6,666,875 B1 12/2003 Sakurai et al.
6,667,825 B2 12/2003 Lu et al.
6,669,073 B2 12/2003 Milliman et al.
6,670,806 B2 12/2003 Wendt et al.
6,671,185 B2 12/2003 Duval
D484,977 S 1/2004 Ryan et al.
6,676,660 B2 1/2004 Wampler et al.
6,677,687 B2 1/2004 Ho et al.
6,679,269 B2 1/2004 Swanson
6,679,410 B2 1/2004 Wursch et al.
6,681,978 B2 1/2004 Geiste et al.
6,681,979 B2 1/2004 Whitman
6,682,527 B2 1/2004 Strul
6,682,528 B2 1/2004 Frazier et al.
6,682,544 B2 1/2004 Mastri et al.
6,685,698 B2 2/2004 Morley et al.
6,685,727 B2 2/2004 Fisher et al.
6,689,153 B1 2/2004 Skiba
6,692,507 B2 2/2004 Pugsley et al.
6,692,692 B2 2/2004 Stetzel
6,695,198 B2 2/2004 Adams et al.
6,695,199 B2 2/2004 Whitman
6,695,774 B2 2/2004 Hale et al.
6,696,814 B2 2/2004 Henderson et al.
6,697,048 B2 2/2004 Rosenberg et al.
6,698,643 B2 3/2004 Whitman
6,699,177 B1 3/2004 Wang et al.
6,699,214 B2 3/2004 Gellman
6,699,235 B2 3/2004 Wallace et al.
6,704,210 B1 3/2004 Myers
6,705,503 B1 3/2004 Pedicini et al.
6,709,445 B2 3/2004 Boebel et al.
6,712,773 B1 3/2004 Viola
6,716,223 B2 4/2004 Leopold et al.
6,716,232 B1 4/2004 Vidal et al.
6,716,233 B1 4/2004 Whitman
6,720,734 B2 4/2004 Norris
6,722,550 B1 4/2004 Ricordi et al.
6,722,552 B2 4/2004 Fenton, Jr.
6,723,087 B2 4/2004 O'Neill et al.
6,723,091 B2 4/2004 Goble et al.
6,723,109 B2 4/2004 Solingen
6,726,697 B2 4/2004 Nicholas et al.
6,726,706 B2 4/2004 Dominguez
6,729,119 B2 5/2004 Schnipke et al.
6,736,825 B2 5/2004 Blatter et al.
6,736,854 B2 5/2004 Vadurro et al.
6,740,030 B2 5/2004 Martone et al.
6,743,230 B2 6/2004 Lutze et al.
6,744,385 B2 6/2004 Kazuya et al.
6,747,121 B2 6/2004 Gogolewski
6,747,300 B2 6/2004 Nadd et al.
6,749,560 B1 6/2004 Konstorum et al.
6,749,600 B1 6/2004 Levy
6,752,768 B2 6/2004 Burdorff et al.
6,752,816 B2 6/2004 Culp et al.
6,754,959 B1 6/2004 Guiette, III et al.
6,755,195 B1 6/2004 Lemke et al.
6,755,338 B2 6/2004 Hahnen et al.
6,755,843 B2 6/2004 Chung et al.
6,756,705 B2 6/2004 Pulford, Jr.
6,758,846 B2 7/2004 Goble et al.
6,761,685 B2 7/2004 Adams et al.
6,762,339 B1 7/2004 Klun et al.
6,764,445 B2 7/2004 Ramans et al.
6,766,957 B2 7/2004 Matsuura et al.
6,767,352 B2 7/2004 Field et al.
6,767,356 B2 7/2004 Kanner et al.
6,769,590 B2 8/2004 Vresh et al.
6,769,594 B2 8/2004 Orban, III
6,770,027 B2 8/2004 Banik et al.
6,770,070 B1 8/2004 Balbierz
6,770,072 B1 8/2004 Truckai et al.
6,773,409 B2 8/2004 Truckai et al.
6,773,438 B1 8/2004 Knodel et al.
6,775,575 B2 8/2004 Bommannan et al.
6,777,838 B2 8/2004 Miekka et al.
6,780,151 B2 8/2004 Grabover et al.
6,780,180 B1 8/2004 Goble et al.
6,783,524 B2 8/2004 Anderson et al.
6,786,382 B1 9/2004 Hoffman
6,786,864 B2 9/2004 Matsuura et al.
6,786,896 B1 9/2004 Madhani et al.
6,788,018 B1 9/2004 Blumenkranz
6,790,173 B2 9/2004 Saadat et al.
6,793,652 B1 9/2004 Whitman et al.
6,793,661 B2 9/2004 Hamilton et al.
6,793,663 B2 9/2004 Kneifel et al.
6,793,669 B2 9/2004 Nakamura et al.
6,796,921 B1 9/2004 Buck et al.
6,802,822 B1 10/2004 Dodge
6,802,843 B2 10/2004 Truckai et al.
6,802,844 B2 10/2004 Ferree
6,805,273 B2 10/2004 Bilotti et al.
6,806,808 B1 10/2004 Watters et al.
6,808,525 B2 10/2004 Latterell et al.
6,810,359 B2 10/2004 Sakaguchi
6,814,741 B2 11/2004 Bowman et al.
6,817,508 B1 11/2004 Racenet et al.
6,817,509 B2 11/2004 Geiste et al.
6,817,974 B2 11/2004 Cooper et al.
6,818,018 B1 11/2004 Sawhney
6,820,791 B2 11/2004 Adams
6,821,273 B2 11/2004 Mollenauer
6,821,282 B2 11/2004 Perry et al.
6,821,284 B2 11/2004 Sturtz et al.
6,827,246 B2 12/2004 Sullivan et al.
6,827,712 B2 12/2004 Tovey et al.
6,827,725 B2 12/2004 Batchelor et al.
6,828,902 B2 12/2004 Casden
6,830,174 B2 12/2004 Hillstead et al.
6,831,629 B2 12/2004 Nishino et al.
6,832,998 B2 12/2004 Goble
6,834,001 B2 12/2004 Myono
6,835,173 B2 12/2004 Couvillon, Jr.
6,835,199 B2 12/2004 McGuckin, Jr. et al.
6,835,336 B2 12/2004 Watt
6,836,611 B2 12/2004 Popovic et al.
6,837,846 B2 1/2005 Jaffe et al.
6,837,883 B2 1/2005 Moll et al.
6,838,493 B2 1/2005 Williams et al.
6,840,423 B2 1/2005 Adams et al.
6,841,967 B2 1/2005 Kim et al.
6,843,403 B2 1/2005 Whitman
6,843,789 B2 1/2005 Goble
6,843,793 B2 1/2005 Brock et al.
6,846,307 B2 1/2005 Whitman et al.
6,846,308 B2 1/2005 Whitman et al.
6,846,309 B2 1/2005 Whitman et al.
6,847,190 B2 1/2005 Schaefer et al.
6,849,071 B2 2/2005 Whitman et al.
6,850,817 B1 2/2005 Green
6,852,122 B2 2/2005 Rush
6,852,330 B2 2/2005 Bowman et al.
6,853,879 B2 2/2005 Sunaoshi
6,858,005 B2 2/2005 Ohline et al.
6,859,882 B2 2/2005 Fung
RE38,708 E 3/2005 Bolanos et al.
D502,994 S 3/2005 Blake, III
6,861,142 B1 3/2005 Wilkie et al.
6,861,954 B2 3/2005 Levin
6,863,668 B2 3/2005 Gillespie et al.
6,863,694 B1 3/2005 Boyce et al.
6,866,178 B2 3/2005 Adams et al.
6,866,671 B2 3/2005 Tierney et al.
6,867,248 B1 3/2005 Martin et al.
6,869,430 B2 3/2005 Balbierz et al.
6,869,435 B2 3/2005 Blake, III

(56) **References Cited**

U.S. PATENT DOCUMENTS

6,872,214 B2 3/2005 Sonnenschein et al.
6,874,669 B2 4/2005 Adams et al.
6,877,647 B2 4/2005 Green et al.
6,878,106 B1 4/2005 Herrmann
6,884,392 B2 4/2005 Malkin et al.
6,884,428 B2 4/2005 Binette et al.
6,887,710 B2 5/2005 Call et al.
6,889,116 B2 5/2005 Jinno
6,893,435 B2 5/2005 Goble
6,894,140 B2 5/2005 Roby
6,899,538 B2 5/2005 Matoba
6,899,593 B1 5/2005 Moeller et al.
6,905,057 B2 6/2005 Swayze et al.
6,905,497 B2 6/2005 Truckai et al.
6,905,498 B2 6/2005 Hooven
6,908,472 B2 6/2005 Wiener et al.
6,911,033 B2 6/2005 de Guillebon et al.
6,911,916 B1 6/2005 Wang et al.
6,913,579 B2 7/2005 Truckai et al.
6,913,608 B2 7/2005 Liddicoat et al.
6,913,613 B2 7/2005 Schwarz et al.
6,921,397 B2 7/2005 Corcoran et al.
6,921,412 B1 7/2005 Black et al.
6,923,093 B2 8/2005 Ullah
6,923,803 B2 8/2005 Goble
6,923,819 B2 8/2005 Meade et al.
6,926,716 B2 8/2005 Baker et al.
6,928,902 B1 8/2005 Eyssallenne
6,929,641 B2 8/2005 Goble et al.
6,929,644 B2 8/2005 Truckai et al.
6,931,830 B2 8/2005 Liao
6,932,218 B2 8/2005 Kosann et al.
6,932,810 B2 8/2005 Ryan
6,936,042 B2 8/2005 Wallace et al.
6,936,948 B2 8/2005 Bell et al.
D509,297 S 9/2005 Wells
D509,589 S 9/2005 Wells
6,939,358 B2 9/2005 Palacios et al.
6,942,662 B2 9/2005 Goble et al.
6,942,674 B2 9/2005 Belef et al.
6,945,444 B2 9/2005 Gresham et al.
6,945,981 B2 9/2005 Donofrio et al.
6,951,562 B2 10/2005 Zwirnmann
6,953,138 B1 10/2005 Dworak et al.
6,953,139 B2 10/2005 Milliman et al.
6,953,461 B2 10/2005 McClurken et al.
6,958,035 B2 10/2005 Friedman et al.
6,959,851 B2 11/2005 Heinrich
6,959,852 B2 11/2005 Shelton, IV et al.
6,960,107 B1 11/2005 Schaub et al.
6,960,163 B2 11/2005 Ewers et al.
6,960,220 B2 11/2005 Marino et al.
6,962,587 B2 11/2005 Johnson et al.
6,963,792 B1 11/2005 Green
6,964,363 B2 11/2005 Wales et al.
6,966,907 B2 11/2005 Goble
6,966,909 B2 11/2005 Marshall et al.
6,968,908 B2 11/2005 Tokunaga et al.
6,969,385 B2 11/2005 Moreyra
6,969,395 B2 11/2005 Eskuri
6,971,988 B2 12/2005 Orban, III
6,972,199 B2 12/2005 Lebouitz et al.
6,974,435 B2 12/2005 Daw et al.
6,974,462 B2 12/2005 Sater
6,978,921 B2 12/2005 Shelton, IV et al.
6,978,922 B2 12/2005 Bilotti et al.
6,981,628 B2 1/2006 Wales
6,981,941 B2 1/2006 Whitman et al.
6,981,978 B2 1/2006 Gannoe
6,984,203 B2 1/2006 Tartaglia et al.
6,984,231 B2 1/2006 Goble et al.
6,986,451 B1 1/2006 Mastri et al.
6,988,649 B2 1/2006 Shelton, IV et al.
6,988,650 B2 1/2006 Schwemberger et al.
6,989,034 B2 1/2006 Hammer et al.
6,990,731 B2 1/2006 Haytayan
6,990,796 B2 1/2006 Schnipke et al.
6,993,200 B2 1/2006 Tastl et al.
6,993,413 B2 1/2006 Sunaoshi
6,994,708 B2 2/2006 Manzo
6,995,729 B2 2/2006 Govari et al.
6,996,433 B2 2/2006 Burbank et al.
6,997,931 B2 2/2006 Sauer et al.
6,997,935 B2 2/2006 Anderson et al.
6,998,736 B2 2/2006 Lee et al.
6,998,816 B2 2/2006 Wieck et al.
7,000,818 B2 2/2006 Shelton, IV et al.
7,000,819 B2 2/2006 Swayze et al.
7,000,911 B2 2/2006 McCormick et al.
7,001,380 B2 2/2006 Goble
7,001,408 B2 2/2006 Knodel et al.
7,004,174 B2 2/2006 Eggers et al.
7,007,176 B2 2/2006 Goodfellow et al.
7,008,433 B2 3/2006 Voellmicke et al.
7,008,435 B2 3/2006 Cummins
7,009,039 B2 3/2006 Yayon et al.
7,011,657 B2 3/2006 Truckai et al.
7,014,640 B2 3/2006 Kemppainen et al.
7,018,357 B2 3/2006 Emmons
7,018,390 B2 3/2006 Turovskiy et al.
7,021,669 B1 4/2006 Lindermeir et al.
7,023,159 B2 4/2006 Gorti et al.
7,025,064 B2 4/2006 Wang et al.
7,025,732 B2 4/2006 Thompson et al.
7,025,743 B2 4/2006 Mann et al.
7,025,775 B2 4/2006 Gadberry et al.
7,028,570 B2 4/2006 Ohta et al.
7,029,435 B2 4/2006 Nakao
7,029,439 B2 4/2006 Roberts et al.
7,030,904 B2 4/2006 Adair et al.
7,032,798 B2 4/2006 Whitman et al.
7,032,799 B2 4/2006 Viola et al.
7,033,356 B2 4/2006 Latterell et al.
7,035,716 B2 4/2006 Harris et al.
7,035,762 B2 4/2006 Menard et al.
7,036,680 B1 5/2006 Flannery
7,037,314 B2 5/2006 Armstrong
7,037,344 B2 5/2006 Kagan et al.
7,041,088 B2 5/2006 Nawrocki et al.
7,041,102 B2 5/2006 Truckai et al.
7,041,868 B2 5/2006 Greene et al.
7,043,852 B2 5/2006 Hayashida et al.
7,044,350 B2 5/2006 Kameyama et al.
7,044,352 B2 5/2006 Shelton, IV et al.
7,044,353 B2 5/2006 Mastri et al.
7,046,082 B2 5/2006 Komiya et al.
7,048,687 B1 5/2006 Reuss et al.
7,048,745 B2 5/2006 Tierney et al.
7,052,454 B2 5/2006 Taylor
7,052,494 B2 5/2006 Goble et al.
7,052,499 B2 5/2006 Steger et al.
7,055,730 B2 6/2006 Ehrenfels et al.
7,055,731 B2 6/2006 Shelton, IV et al.
7,056,284 B2 6/2006 Martone et al.
7,056,330 B2 6/2006 Gayton
7,059,331 B2 6/2006 Adams et al.
7,059,508 B2 6/2006 Shelton, IV et al.
7,063,671 B2 6/2006 Couvillon, Jr.
7,063,712 B2 6/2006 Vargas et al.
7,064,509 B1 6/2006 Fu et al.
7,066,879 B2 6/2006 Fowler et al.
7,066,944 B2 6/2006 Laufer et al.
7,067,038 B2 6/2006 Trokhan et al.
7,070,083 B2 7/2006 Jankowski
7,070,559 B2 7/2006 Adams et al.
7,070,597 B2 7/2006 Truckai et al.
7,071,287 B2 7/2006 Rhine et al.
7,075,770 B1 7/2006 Smith
7,077,856 B2 7/2006 Whitman
7,080,769 B2 7/2006 Vresh et al.
7,081,114 B2 7/2006 Rashidi
7,083,073 B2 8/2006 Yoshie et al.
7,083,075 B2 8/2006 Swayze et al.
7,083,571 B2 8/2006 Wang et al.

(56) **References Cited**

U.S. PATENT DOCUMENTS


| | | | |
|---|---|---|---|
| 7,083,615 | B2 | 8/2006 | Peterson et al. |
| 7,083,619 | B2 | 8/2006 | Truckai et al. |
| 7,083,620 | B2 | 8/2006 | Jahns et al. |
| 7,083,626 | B2 | 8/2006 | Hart et al. |
| 7,087,049 | B2 | 8/2006 | Nowlin et al. |
| 7,087,054 | B2 | 8/2006 | Truckai et al. |
| 7,087,071 | B2 | 8/2006 | Nicholas et al. |
| 7,090,637 | B2 | 8/2006 | Danitz et al. |
| 7,090,673 | B2 | 8/2006 | Dycus et al. |
| 7,090,683 | B2 | 8/2006 | Brock et al. |
| 7,090,684 | B2 | 8/2006 | McGuckin, Jr. et al. |
| 7,091,412 | B2 | 8/2006 | Wang et al. |
| 7,094,202 | B2 | 8/2006 | Nobis et al. |
| 7,094,247 | B2 | 8/2006 | Monassevitch et al. |
| 7,094,916 | B2 | 8/2006 | DeLuca et al. |
| 7,096,972 | B2 | 8/2006 | Orozco, Jr. |
| 7,097,089 | B2 | 8/2006 | Marczyk |
| 7,097,644 | B2 | 8/2006 | Long |
| 7,097,650 | B2 | 8/2006 | Weller et al. |
| 7,098,794 | B2 | 8/2006 | Lindsay et al. |
| 7,100,949 | B2 | 9/2006 | Williams et al. |
| 7,101,187 | B1 | 9/2006 | Deconinck et al. |
| 7,101,394 | B2 | 9/2006 | Hamm et al. |
| 7,104,741 | B2 | 9/2006 | Krohn |
| 7,108,695 | B2 | 9/2006 | Witt et al. |
| 7,108,701 | B2 | 9/2006 | Evens et al. |
| 7,108,709 | B2 | 9/2006 | Cummins |
| 7,111,768 | B2 | 9/2006 | Cummins et al. |
| 7,111,769 | B2 | 9/2006 | Wales et al. |
| 7,112,214 | B2 | 9/2006 | Peterson et al. |
| RE39,358 | E | 10/2006 | Goble |
| 7,114,642 | B2 | 10/2006 | Whitman |
| 7,116,100 | B1 | 10/2006 | Mock et al. |
| 7,118,020 | B2 | 10/2006 | Lee et al. |
| 7,118,528 | B1 | 10/2006 | Piskun |
| 7,118,563 | B2 | 10/2006 | Weckwerth et al. |
| 7,118,582 | B1 | 10/2006 | Wang et al. |
| 7,119,534 | B2 | 10/2006 | Butzmann |
| 7,121,446 | B2 | 10/2006 | Arad et al. |
| 7,121,773 | B2 | 10/2006 | Mikiya et al. |
| 7,122,028 | B2 | 10/2006 | Looper et al. |
| 7,125,403 | B2 | 10/2006 | Julian et al. |
| 7,125,409 | B2 | 10/2006 | Truckai et al. |
| 7,126,303 | B2 | 10/2006 | Farritor et al. |
| 7,126,879 | B2 | 10/2006 | Snyder |
| 7,128,253 | B2 | 10/2006 | Mastri et al. |
| 7,128,254 | B2 | 10/2006 | Shelton, IV et al. |
| 7,128,748 | B2 | 10/2006 | Mooradian et al. |
| 7,131,445 | B2 | 11/2006 | Amoah |
| 7,133,601 | B2 | 11/2006 | Phillips et al. |
| 7,134,587 | B2 | 11/2006 | Schwemberger et al. |
| 7,135,027 | B2 | 11/2006 | Delmotte |
| 7,137,980 | B2 | 11/2006 | Buysse et al. |
| 7,137,981 | B2 | 11/2006 | Long |
| 7,139,016 | B2 | 11/2006 | Squilla et al. |
| 7,140,527 | B2 | 11/2006 | Ehrenfels et al. |
| 7,140,528 | B2 | 11/2006 | Shelton, IV |
| 7,141,055 | B2 | 11/2006 | Abrams et al. |
| 7,143,923 | B2 | 12/2006 | Shelton, IV et al. |
| 7,143,924 | B2 | 12/2006 | Scirica et al. |
| 7,143,925 | B2 | 12/2006 | Shelton, IV et al. |
| 7,143,926 | B2 | 12/2006 | Shelton, IV et al. |
| 7,146,191 | B2 | 12/2006 | Kerner et al. |
| 7,147,138 | B2 | 12/2006 | Shelton, IV |
| 7,147,139 | B2 | 12/2006 | Schwemberger et al. |
| 7,147,140 | B2 | 12/2006 | Wukusick et al. |
| 7,147,637 | B2 | 12/2006 | Goble |
| 7,147,648 | B2 | 12/2006 | Lin |
| 7,147,650 | B2 | 12/2006 | Lee |
| 7,150,748 | B2 | 12/2006 | Ebbutt et al. |
| 7,153,300 | B2 | 12/2006 | Goble |
| 7,155,316 | B2 | 12/2006 | Sutherland et al. |
| 7,156,863 | B2 | 1/2007 | Sonnenschein et al. |
| 7,159,750 | B2 | 1/2007 | Racenet et al. |
| 7,160,296 | B2 | 1/2007 | Pearson et al. |
| 7,160,299 | B2 | 1/2007 | Baily |
| 7,161,036 | B2 | 1/2007 | Oikawa et al. |
| 7,161,580 | B2 | 1/2007 | Bailey et al. |
| 7,163,563 | B2 | 1/2007 | Schwartz et al. |
| 7,166,133 | B2 | 1/2007 | Evans et al. |
| 7,168,604 | B2 | 1/2007 | Milliman et al. |
| 7,170,910 | B2 | 1/2007 | Chen et al. |
| 7,171,279 | B2 | 1/2007 | Buckingham et al. |
| 7,172,104 | B2 | 2/2007 | Scirica et al. |
| 7,172,593 | B2 | 2/2007 | Trieu et al. |
| 7,172,615 | B2 | 2/2007 | Morriss et al. |
| 7,174,636 | B2 | 2/2007 | Lowe |
| 7,179,223 | B2 | 2/2007 | Motoki et al. |
| 7,179,267 | B2 | 2/2007 | Nolan et al. |
| 7,182,239 | B1 | 2/2007 | Myers |
| 7,182,763 | B2 | 2/2007 | Nardella |
| 7,183,737 | B2 | 2/2007 | Kitagawa |
| 7,187,960 | B2 | 3/2007 | Abreu |
| 7,188,758 | B2 | 3/2007 | Viola et al. |
| 7,189,207 | B2 | 3/2007 | Viola |
| 7,190,147 | B2 | 3/2007 | Gileff et al. |
| 7,195,627 | B2 | 3/2007 | Amoah et al. |
| 7,196,911 | B2 | 3/2007 | Takano et al. |
| D541,418 | S | 4/2007 | Schechter et al. |
| 7,199,537 | B2 | 4/2007 | Okamura et al. |
| 7,202,576 | B1 | 4/2007 | Dechene et al. |
| 7,202,653 | B2 | 4/2007 | Pai |
| 7,204,404 | B2 | 4/2007 | Nguyen et al. |
| 7,204,835 | B2 | 4/2007 | Latterell et al. |
| 7,207,233 | B2 | 4/2007 | Wadge |
| 7,207,471 | B2 | 4/2007 | Heinrich et al. |
| 7,207,472 | B2 | 4/2007 | Wukusick et al. |
| 7,207,556 | B2 | 4/2007 | Saitoh et al. |
| 7,208,005 | B2 | 4/2007 | Frecker et al. |
| 7,210,609 | B2 | 5/2007 | Leiboff et al. |
| 7,211,081 | B2 | 5/2007 | Goble |
| 7,211,084 | B2 | 5/2007 | Goble et al. |
| 7,211,092 | B2 | 5/2007 | Hughett |
| 7,211,979 | B2 | 5/2007 | Khatib et al. |
| 7,213,736 | B2 | 5/2007 | Wales et al. |
| 7,214,224 | B2 | 5/2007 | Goble |
| 7,215,517 | B2 | 5/2007 | Takamatsu |
| 7,217,285 | B2 | 5/2007 | Vargas et al. |
| 7,220,260 | B2 | 5/2007 | Fleming et al. |
| 7,220,272 | B2 | 5/2007 | Weadock |
| 7,225,959 | B2 | 6/2007 | Patton et al. |
| 7,225,963 | B2 | 6/2007 | Scirica |
| 7,225,964 | B2 | 6/2007 | Mastri et al. |
| 7,226,450 | B2 | 6/2007 | Athanasiou et al. |
| 7,229,408 | B2 | 6/2007 | Douglas et al. |
| 7,234,624 | B2 | 6/2007 | Gresham et al. |
| 7,235,072 | B2 | 6/2007 | Sartor et al. |
| 7,235,089 | B1 | 6/2007 | McGuckin, Jr. |
| 7,235,302 | B2 | 6/2007 | Jing et al. |
| 7,237,708 | B1 | 7/2007 | Guy et al. |
| 7,238,195 | B2 | 7/2007 | Viola |
| 7,238,901 | B2 | 7/2007 | Kim et al. |
| 7,239,657 | B1 | 7/2007 | Gunnarsson |
| 7,241,288 | B2 | 7/2007 | Braun |
| 7,241,289 | B2 | 7/2007 | Braun |
| 7,246,734 | B2 | 7/2007 | Shelton, IV |
| 7,247,161 | B2 | 7/2007 | Johnston et al. |
| 7,249,267 | B2 | 7/2007 | Chapuis |
| 7,252,641 | B2 | 8/2007 | Thompson et al. |
| 7,252,660 | B2 | 8/2007 | Kunz |
| 7,255,012 | B2 | 8/2007 | Hedtke |
| 7,255,696 | B2 | 8/2007 | Goble et al. |
| 7,256,695 | B2 | 8/2007 | Hamel et al. |
| 7,258,262 | B2 | 8/2007 | Mastri et al. |
| 7,258,546 | B2 | 8/2007 | Beier et al. |
| 7,260,431 | B2 | 8/2007 | Libbus et al. |
| 7,265,374 | B2 | 9/2007 | Lee et al. |
| 7,267,677 | B2 | 9/2007 | Johnson et al. |
| 7,267,679 | B2 | 9/2007 | McGuckin, Jr. et al. |
| 7,272,002 | B2 | 9/2007 | Drapeau |
| 7,273,483 | B2 | 9/2007 | Wiener et al. |
| 7,275,674 | B2 | 10/2007 | Racenet et al. |
| 7,276,044 | B2 | 10/2007 | Ferry et al. |
| 7,276,068 | B2 | 10/2007 | Johnson et al. |

(56) **References Cited**

U.S. PATENT DOCUMENTS


| | | | |
|---|---|---|---|
| 7,278,562 | B2 | 10/2007 | Mastri et al. |
| 7,278,563 | B1 | 10/2007 | Green |
| 7,278,949 | B2 | 10/2007 | Bader |
| 7,278,994 | B2 | 10/2007 | Goble |
| 7,282,048 | B2 | 10/2007 | Goble et al. |
| 7,286,850 | B2 | 10/2007 | Frielink et al. |
| 7,287,682 | B1 | 10/2007 | Ezzat et al. |
| 7,289,139 | B2 | 10/2007 | Amling et al. |
| 7,293,685 | B2 | 11/2007 | Ehrenfels et al. |
| 7,295,893 | B2 | 11/2007 | Sunaoshi |
| 7,295,907 | B2 | 11/2007 | Lu et al. |
| 7,296,722 | B2 | 11/2007 | Ivanko |
| 7,296,724 | B2 | 11/2007 | Green et al. |
| 7,297,149 | B2 | 11/2007 | Vitali et al. |
| 7,300,373 | B2 | 11/2007 | Jinno et al. |
| 7,300,450 | B2 | 11/2007 | Vleugels et al. |
| 7,303,106 | B2 | 12/2007 | Milliman et al. |
| 7,303,107 | B2 | 12/2007 | Milliman et al. |
| 7,303,108 | B2 | 12/2007 | Shelton, IV |
| 7,303,502 | B2 | 12/2007 | Thompson |
| 7,303,556 | B2 | 12/2007 | Metzger |
| 7,306,597 | B2 | 12/2007 | Manzo |
| 7,308,998 | B2 | 12/2007 | Mastri et al. |
| 7,311,238 | B2 | 12/2007 | Liu |
| 7,313,430 | B2 | 12/2007 | Urquhart et al. |
| 7,314,473 | B2 | 1/2008 | Jinno et al. |
| 7,322,859 | B2 | 1/2008 | Evans |
| 7,322,975 | B2 | 1/2008 | Goble et al. |
| 7,322,994 | B2 | 1/2008 | Nicholas et al. |
| 7,324,572 | B2 | 1/2008 | Chang |
| 7,326,203 | B2 | 2/2008 | Papineau et al. |
| 7,326,213 | B2 | 2/2008 | Benderev et al. |
| 7,328,828 | B2 | 2/2008 | Ortiz et al. |
| 7,328,829 | B2 | 2/2008 | Arad et al. |
| 7,330,004 | B2 | 2/2008 | DeJonge et al. |
| 7,331,340 | B2 | 2/2008 | Barney |
| 7,331,343 | B2 | 2/2008 | Schmidt et al. |
| 7,331,403 | B2 | 2/2008 | Berry et al. |
| 7,331,406 | B2 | 2/2008 | Wottreng, Jr. et al. |
| 7,331,969 | B1 | 2/2008 | Inganas et al. |
| 7,334,717 | B2 | 2/2008 | Rethy et al. |
| 7,334,718 | B2 | 2/2008 | McAlister et al. |
| 7,335,199 | B2 | 2/2008 | Goble et al. |
| 7,336,045 | B2 | 2/2008 | Clermonts |
| 7,336,048 | B2 | 2/2008 | Lohr |
| 7,336,184 | B2 | 2/2008 | Smith et al. |
| 7,337,774 | B2 | 3/2008 | Webb |
| 7,338,505 | B2 | 3/2008 | Belson |
| 7,338,513 | B2 | 3/2008 | Lee et al. |
| 7,341,591 | B2 | 3/2008 | Grinberg |
| 7,343,920 | B2 | 3/2008 | Toby et al. |
| 7,344,532 | B2 | 3/2008 | Goble et al. |
| 7,344,533 | B2 | 3/2008 | Pearson et al. |
| 7,346,344 | B2 | 3/2008 | Fontaine |
| 7,346,406 | B2 | 3/2008 | Brotto et al. |
| 7,348,763 | B1 | 3/2008 | Reinhart et al. |
| 7,348,875 | B2 | 3/2008 | Hughes et al. |
| RE40,237 | E | 4/2008 | Bilotti et al. |
| 7,351,258 | B2 | 4/2008 | Ricotta et al. |
| 7,354,447 | B2 | 4/2008 | Shelton, IV et al. |
| 7,354,502 | B2 | 4/2008 | Polat et al. |
| 7,357,287 | B2 | 4/2008 | Shelton, IV et al. |
| 7,357,806 | B2 | 4/2008 | Rivera et al. |
| 7,361,168 | B2 | 4/2008 | Makower et al. |
| 7,361,195 | B2 | 4/2008 | Schwartz et al. |
| 7,364,060 | B2 | 4/2008 | Milliman |
| 7,364,061 | B2 | 4/2008 | Swayze et al. |
| 7,368,124 | B2 | 5/2008 | Chun et al. |
| 7,371,210 | B2 | 5/2008 | Brock et al. |
| 7,371,403 | B2 | 5/2008 | McCarthy et al. |
| 7,377,918 | B2 | 5/2008 | Amoah |
| 7,377,928 | B2 | 5/2008 | Zubik et al. |
| 7,380,695 | B2 | 6/2008 | Doll et al. |
| 7,380,696 | B2 | 6/2008 | Shelton, IV et al. |
| 7,384,403 | B2 | 6/2008 | Sherman |
| 7,384,417 | B2 | 6/2008 | Cucin |
| 7,386,365 | B2 | 6/2008 | Nixon |
| 7,386,730 | B2 | 6/2008 | Uchikubo |
| 7,388,217 | B2 | 6/2008 | Buschbeck et al. |
| 7,388,484 | B2 | 6/2008 | Hsu |
| 7,391,173 | B2 | 6/2008 | Schena |
| 7,394,190 | B2 | 7/2008 | Huang |
| 7,396,356 | B2 | 7/2008 | Mollenauer |
| 7,397,364 | B2 | 7/2008 | Govari |
| 7,398,707 | B2 | 7/2008 | Morley et al. |
| 7,398,907 | B2 | 7/2008 | Racenet et al. |
| 7,398,908 | B2 | 7/2008 | Holsten et al. |
| 7,400,107 | B2 | 7/2008 | Schneider et al. |
| 7,400,752 | B2 | 7/2008 | Zacharias |
| 7,401,000 | B2 | 7/2008 | Nakamura |
| 7,401,721 | B2 | 7/2008 | Holsten et al. |
| 7,404,449 | B2 | 7/2008 | Bermingham et al. |
| 7,404,508 | B2 | 7/2008 | Smith et al. |
| 7,404,509 | B2 | 7/2008 | Ortiz et al. |
| 7,404,822 | B2 | 7/2008 | Viart et al. |
| 7,407,074 | B2 | 8/2008 | Ortiz et al. |
| 7,407,075 | B2 | 8/2008 | Holsten et al. |
| 7,407,076 | B2 | 8/2008 | Racenet et al. |
| 7,407,077 | B2 | 8/2008 | Ortiz et al. |
| 7,407,078 | B2 | 8/2008 | Shelton, IV et al. |
| 7,408,310 | B2 | 8/2008 | Hong et al. |
| 7,410,085 | B2 | 8/2008 | Wolf et al. |
| 7,410,086 | B2 | 8/2008 | Ortiz et al. |
| 7,410,483 | B2 | 8/2008 | Danitz et al. |
| 7,413,563 | B2 | 8/2008 | Corcoran et al. |
| 7,416,101 | B2 | 8/2008 | Shelton, IV et al. |
| 7,418,078 | B2 | 8/2008 | Blanz et al. |
| RE40,514 | E | 9/2008 | Mastri et al. |
| 7,419,080 | B2 | 9/2008 | Smith et al. |
| 7,419,081 | B2 | 9/2008 | Ehrenfels et al. |
| 7,419,321 | B2 | 9/2008 | Tereschouk |
| 7,419,495 | B2 | 9/2008 | Menn et al. |
| 7,422,136 | B1 | 9/2008 | Marczyk |
| 7,422,138 | B2 | 9/2008 | Bilotti et al. |
| 7,422,139 | B2 | 9/2008 | Shelton, IV et al. |
| 7,424,965 | B2 | 9/2008 | Racenet et al. |
| 7,427,607 | B2 | 9/2008 | Suzuki |
| D578,644 | S | 10/2008 | Shumer et al. |
| 7,431,188 | B1 | 10/2008 | Marczyk |
| 7,431,189 | B2 | 10/2008 | Shelton, IV et al. |
| 7,431,694 | B2 | 10/2008 | Stefanchik et al. |
| 7,431,730 | B2 | 10/2008 | Viola |
| 7,434,715 | B2 | 10/2008 | Shelton, IV et al. |
| 7,434,717 | B2 | 10/2008 | Shelton, IV et al. |
| 7,435,249 | B2 | 10/2008 | Buysse et al. |
| 7,438,209 | B1 | 10/2008 | Hess et al. |
| 7,438,718 | B2 | 10/2008 | Milliman et al. |
| 7,439,354 | B2 | 10/2008 | Lenges et al. |
| 7,441,684 | B2 | 10/2008 | Shelton, IV et al. |
| 7,441,685 | B1 | 10/2008 | Boudreaux |
| 7,442,201 | B2 | 10/2008 | Pugsley et al. |
| 7,443,547 | B2 | 10/2008 | Moreno et al. |
| 7,448,525 | B2 | 11/2008 | Shelton, IV et al. |
| 7,451,904 | B2 | 11/2008 | Shelton, IV |
| 7,455,208 | B2 | 11/2008 | Wales et al. |
| 7,455,676 | B2 | 11/2008 | Holsten et al. |
| 7,455,682 | B2 | 11/2008 | Viola |
| 7,461,767 | B2 | 12/2008 | Viola et al. |
| 7,462,187 | B2 | 12/2008 | Johnston et al. |
| 7,464,845 | B2 | 12/2008 | Chou |
| 7,464,846 | B2 | 12/2008 | Shelton, IV et al. |
| 7,464,847 | B2 | 12/2008 | Viola et al. |
| 7,464,849 | B2 | 12/2008 | Shelton, IV et al. |
| 7,467,740 | B2 | 12/2008 | Shelton, IV et al. |
| 7,467,849 | B2 | 12/2008 | Silverbrook et al. |
| 7,472,814 | B2 | 1/2009 | Mastri et al. |
| 7,472,815 | B2 | 1/2009 | Shelton, IV et al. |
| 7,472,816 | B2 | 1/2009 | Holsten et al. |
| 7,473,221 | B2 | 1/2009 | Ewers et al. |
| 7,473,253 | B2 | 1/2009 | Dycus et al. |
| 7,473,263 | B2 | 1/2009 | Johnston et al. |
| 7,476,237 | B2 | 1/2009 | Taniguchi et al. |
| 7,479,608 | B2 | 1/2009 | Smith |
| 7,481,347 | B2 | 1/2009 | Roy |

(56) **References Cited**

U.S. PATENT DOCUMENTS


| | | | |
|---|---|---|---|
| 7,481,348 | B2 | 1/2009 | Marczyk |
| 7,481,349 | B2 | 1/2009 | Holsten et al. |
| 7,481,824 | B2 | 1/2009 | Boudreaux et al. |
| 7,485,124 | B2 | 2/2009 | Kuhns et al. |
| 7,485,133 | B2 | 2/2009 | Cannon et al. |
| 7,485,142 | B2 | 2/2009 | Milo |
| 7,487,899 | B2 | 2/2009 | Shelton, IV et al. |
| 7,489,055 | B2 | 2/2009 | Jeong et al. |
| 7,490,749 | B2 | 2/2009 | Schall et al. |
| 7,491,232 | B2 | 2/2009 | Bolduc et al. |
| 7,494,039 | B2 | 2/2009 | Racenet et al. |
| 7,494,499 | B2 | 2/2009 | Nagase et al. |
| 7,494,501 | B2 | 2/2009 | Ahlberg et al. |
| 7,500,979 | B2 | 3/2009 | Hueil et al. |
| 7,501,198 | B2 | 3/2009 | Barlev et al. |
| 7,503,474 | B2 | 3/2009 | Hillstead et al. |
| 7,506,790 | B2 | 3/2009 | Shelton, IV |
| 7,506,791 | B2 | 3/2009 | Omaits et al. |
| 7,507,202 | B2 | 3/2009 | Schoellhorn |
| 7,510,107 | B2 | 3/2009 | Timm et al. |
| 7,510,534 | B2 | 3/2009 | Burdorff et al. |
| 7,510,566 | B2 | 3/2009 | Jacobs et al. |
| 7,513,407 | B1 | 4/2009 | Chang |
| 7,513,408 | B2 | 4/2009 | Shelton, IV et al. |
| 7,517,356 | B2 | 4/2009 | Heinrich |
| 7,524,320 | B2 | 4/2009 | Tierney et al. |
| 7,527,632 | B2 | 5/2009 | Houghton et al. |
| 7,530,984 | B2 | 5/2009 | Sonnenschein et al. |
| 7,530,985 | B2 | 5/2009 | Takemoto et al. |
| 7,533,906 | B2 | 5/2009 | Luettgen et al. |
| 7,534,259 | B2 | 5/2009 | Lashinski et al. |
| 7,540,867 | B2 | 6/2009 | Jinno et al. |
| 7,542,807 | B2 | 6/2009 | Bertolero et al. |
| 7,546,939 | B2 | 6/2009 | Adams et al. |
| 7,546,940 | B2 | 6/2009 | Milliman et al. |
| 7,547,312 | B2 | 6/2009 | Bauman et al. |
| 7,549,563 | B2 | 6/2009 | Mather et al. |
| 7,549,564 | B2 | 6/2009 | Boudreaux |
| 7,549,998 | B2 | 6/2009 | Braun |
| 7,552,854 | B2 | 6/2009 | Wixey et al. |
| 7,553,173 | B2 | 6/2009 | Kowalick |
| 7,553,275 | B2 | 6/2009 | Padget et al. |
| 7,554,343 | B2 | 6/2009 | Bromfield |
| 7,556,185 | B2 | 7/2009 | Viola |
| 7,556,186 | B2 | 7/2009 | Milliman |
| 7,556,647 | B2 | 7/2009 | Drews et al. |
| 7,559,449 | B2 | 7/2009 | Viola |
| 7,559,450 | B2 | 7/2009 | Wales et al. |
| 7,559,452 | B2 | 7/2009 | Wales et al. |
| 7,559,937 | B2 | 7/2009 | de La Torre et al. |
| 7,561,637 | B2 | 7/2009 | Jonsson et al. |
| 7,562,910 | B2 | 7/2009 | Kertesz et al. |
| 7,563,269 | B2 | 7/2009 | Hashiguchi |
| 7,563,862 | B2 | 7/2009 | Sieg et al. |
| 7,565,993 | B2 | 7/2009 | Milliman et al. |
| 7,566,300 | B2 | 7/2009 | Devierre et al. |
| 7,567,045 | B2 | 7/2009 | Fristedt |
| 7,568,603 | B2 | 8/2009 | Shelton, IV et al. |
| 7,568,604 | B2 | 8/2009 | Ehrenfels et al. |
| 7,568,619 | B2 | 8/2009 | Todd et al. |
| 7,575,144 | B2 | 8/2009 | Ortiz et al. |
| 7,578,825 | B2 | 8/2009 | Huebner |
| 7,583,063 | B2 | 9/2009 | Dooley |
| 7,586,289 | B2 | 9/2009 | Andruk et al. |
| 7,588,174 | B2 | 9/2009 | Holsten et al. |
| 7,588,175 | B2 | 9/2009 | Timm et al. |
| 7,588,176 | B2 | 9/2009 | Timm et al. |
| 7,588,177 | B2 | 9/2009 | Racenet |
| 7,591,783 | B2 | 9/2009 | Boulais et al. |
| 7,591,818 | B2 | 9/2009 | Bertolero et al. |
| 7,593,766 | B2 | 9/2009 | Faber et al. |
| 7,597,229 | B2 | 10/2009 | Boudreaux et al. |
| 7,597,230 | B2 | 10/2009 | Racenet et al. |
| 7,597,693 | B2 | 10/2009 | Garrison |
| 7,597,699 | B2 | 10/2009 | Rogers |
| 7,598,972 | B2 | 10/2009 | Tomita |
| 7,600,663 | B2 | 10/2009 | Green |
| 7,604,150 | B2 | 10/2009 | Boudreaux |
| 7,604,151 | B2 | 10/2009 | Hess et al. |
| 7,604,668 | B2 | 10/2009 | Farnsworth et al. |
| 7,607,557 | B2 | 10/2009 | Shelton, IV et al. |
| 7,611,038 | B2 | 11/2009 | Racenet et al. |
| 7,611,474 | B2 | 11/2009 | Hibner et al. |
| 7,615,003 | B2 | 11/2009 | Stefanchik et al. |
| 7,615,067 | B2 | 11/2009 | Lee et al. |
| 7,617,961 | B2 | 11/2009 | Viola |
| 7,624,902 | B2 | 12/2009 | Marczyk et al. |
| 7,624,903 | B2 | 12/2009 | Green et al. |
| 7,625,370 | B2 | 12/2009 | Hart et al. |
| 7,630,841 | B2 | 12/2009 | Comisky et al. |
| 7,631,793 | B2 | 12/2009 | Rethy et al. |
| 7,631,794 | B2 | 12/2009 | Rethy et al. |
| 7,635,074 | B2 | 12/2009 | Olson et al. |
| 7,635,922 | B2 | 12/2009 | Becker |
| 7,637,409 | B2 | 12/2009 | Marczyk |
| 7,637,410 | B2 | 12/2009 | Marczyk |
| 7,638,958 | B2 | 12/2009 | Philipp et al. |
| 7,641,091 | B2 | 1/2010 | Olson et al. |
| 7,641,092 | B2 | 1/2010 | Kruszynski et al. |
| 7,641,093 | B2 | 1/2010 | Doll et al. |
| 7,641,095 | B2 | 1/2010 | Viola |
| 7,641,671 | B2 | 1/2010 | Crainich |
| 7,644,783 | B2 | 1/2010 | Roberts et al. |
| 7,644,848 | B2 | 1/2010 | Swayze et al. |
| 7,645,230 | B2 | 1/2010 | Mikkaichi et al. |
| 7,648,457 | B2 | 1/2010 | Stefanchik et al. |
| 7,648,519 | B2 | 1/2010 | Lee et al. |
| 7,650,185 | B2 | 1/2010 | Maile et al. |
| 7,651,017 | B2 | 1/2010 | Ortiz et al. |
| 7,651,498 | B2 | 1/2010 | Shifrin et al. |
| 7,654,431 | B2 | 2/2010 | Hueil et al. |
| 7,655,004 | B2 | 2/2010 | Long |
| 7,655,288 | B2 | 2/2010 | Bauman et al. |
| 7,655,584 | B2 | 2/2010 | Biran et al. |
| 7,656,131 | B2 | 2/2010 | Embrey et al. |
| 7,658,311 | B2 | 2/2010 | Boudreaux |
| 7,658,312 | B2 | 2/2010 | Vidal et al. |
| 7,658,705 | B2 | 2/2010 | Melvin et al. |
| 7,659,219 | B2 | 2/2010 | Biran et al. |
| 7,662,161 | B2 | 2/2010 | Briganti et al. |
| 7,665,646 | B2 | 2/2010 | Prommersberger |
| 7,665,647 | B2 | 2/2010 | Shelton, IV et al. |
| 7,669,746 | B2 | 3/2010 | Shelton, IV |
| 7,669,747 | B2 | 3/2010 | Weisenburgh, II et al. |
| 7,670,334 | B2 | 3/2010 | Hueil et al. |
| 7,673,780 | B2 | 3/2010 | Shelton, IV et al. |
| 7,673,781 | B2 | 3/2010 | Swayze et al. |
| 7,673,782 | B2 | 3/2010 | Hess et al. |
| 7,673,783 | B2 | 3/2010 | Morgan et al. |
| 7,674,253 | B2 | 3/2010 | Fisher et al. |
| 7,674,255 | B2 | 3/2010 | Braun |
| 7,674,263 | B2 | 3/2010 | Ryan |
| 7,674,270 | B2 | 3/2010 | Layer |
| 7,682,307 | B2 | 3/2010 | Danitz et al. |
| 7,682,367 | B2 | 3/2010 | Shah et al. |
| 7,682,686 | B2 | 3/2010 | Curro et al. |
| 7,686,201 | B2 | 3/2010 | Csiky |
| 7,686,804 | B2 | 3/2010 | Johnson et al. |
| 7,686,826 | B2 | 3/2010 | Lee et al. |
| 7,688,028 | B2 | 3/2010 | Phillips et al. |
| 7,691,098 | B2 | 4/2010 | Wallace et al. |
| 7,691,103 | B2 | 4/2010 | Fernandez et al. |
| 7,691,106 | B2 | 4/2010 | Schenberger et al. |
| 7,694,864 | B2 | 4/2010 | Okada et al. |
| 7,694,865 | B2 | 4/2010 | Scirica |
| 7,695,485 | B2 | 4/2010 | Whitman et al. |
| 7,699,204 | B2 | 4/2010 | Viola |
| 7,699,835 | B2 | 4/2010 | Lee et al. |
| 7,699,844 | B2 | 4/2010 | Utley et al. |
| 7,699,846 | B2 | 4/2010 | Ryan |
| 7,699,856 | B2 | 4/2010 | Van Wyk et al. |
| 7,699,859 | B2 | 4/2010 | Bombard et al. |
| 7,699,860 | B2 | 4/2010 | Huitema et al. |
| 7,703,653 | B2 | 4/2010 | Shah et al. |

(56) **References Cited**

U.S. PATENT DOCUMENTS

7,705,559 B2 4/2010 Powell et al.
7,708,180 B2 5/2010 Murray et al.
7,708,181 B2 5/2010 Cole et al.
7,708,182 B2 5/2010 Viola
7,708,758 B2 5/2010 Lee et al.
7,712,182 B2 5/2010 Zeiler et al.
7,713,190 B2 5/2010 Brock et al.
7,714,239 B2 5/2010 Smith
7,714,334 B2 5/2010 Lin
7,717,312 B2 5/2010 Beetel
7,717,313 B2 5/2010 Criscuolo et al.
7,717,846 B2 5/2010 Zirps et al.
7,717,873 B2 5/2010 Swick
7,717,915 B2 5/2010 Miyazawa
7,718,180 B2 5/2010 Karp
7,718,556 B2 5/2010 Matsuda et al.
7,721,930 B2 5/2010 McKenna et al.
7,721,931 B2 5/2010 Shelton, IV et al.
7,721,933 B2 5/2010 Ehrenfels et al.
7,721,934 B2 5/2010 Shelton, IV et al.
7,721,936 B2 5/2010 Shalton, IV et al.
7,722,527 B2 5/2010 Bouchier et al.
7,722,607 B2 5/2010 Dumbauld et al.
7,722,610 B2 5/2010 Viola et al.
7,725,214 B2 5/2010 Diolaiti
7,726,171 B2 6/2010 Langlotz et al.
7,726,537 B2 6/2010 Olson et al.
7,726,538 B2 6/2010 Holsten et al.
7,726,539 B2 6/2010 Holsten et al.
7,727,954 B2 6/2010 McKay
7,728,553 B2 6/2010 Carrier et al.
7,729,742 B2 6/2010 Govari
7,731,072 B2 6/2010 Timm et al.
7,731,073 B2 6/2010 Wixey et al.
7,731,724 B2 6/2010 Huitema et al.
7,735,703 B2 6/2010 Morgan et al.
7,736,254 B2 6/2010 Schena
7,736,306 B2 6/2010 Brustad et al.
7,736,374 B2 6/2010 Vaughan et al.
7,738,971 B2 6/2010 Swayze et al.
7,740,159 B2 6/2010 Shelton, IV et al.
7,742,036 B2 6/2010 Grant et al.
7,743,960 B2 6/2010 Whitman et al.
7,744,624 B2 6/2010 Bettuchi
7,744,627 B2 6/2010 Orban, III et al.
7,744,628 B2 6/2010 Viola
7,747,146 B2 6/2010 Milano et al.
7,748,587 B2 7/2010 Haramiishi et al.
7,748,632 B2 7/2010 Coleman et al.
7,749,204 B2 7/2010 Dhanaraj et al.
7,751,870 B2 7/2010 Whitman
7,753,245 B2 7/2010 Boudreaux et al.
7,753,246 B2 7/2010 Scirica
7,753,904 B2 7/2010 Shelton, IV et al.
7,757,924 B2 7/2010 Gerbi et al.
7,758,612 B2 7/2010 Shipp
7,762,462 B2 7/2010 Gelbman
7,762,998 B2 7/2010 Birk et al.
7,766,207 B2 8/2010 Mather et al.
7,766,209 B2 8/2010 Baxter, III et al.
7,766,210 B2 8/2010 Shelton, IV et al.
7,766,821 B2 8/2010 Brunnen et al.
7,766,894 B2 8/2010 Weitzner et al.
7,770,658 B2 8/2010 Ito et al.
7,770,773 B2 8/2010 Whitman et al.
7,770,774 B2 8/2010 Mastri et al.
7,770,775 B2 8/2010 Shelton, IV et al.
7,770,776 B2 8/2010 Chen et al.
7,771,396 B2 8/2010 Stefanchik et al.
7,772,720 B2 8/2010 McGee et al.
7,772,725 B2 8/2010 Siman-Tov
7,775,972 B2 8/2010 Brock et al.
7,776,037 B2 8/2010 Odom
7,776,060 B2 8/2010 Mooradian et al.
7,776,065 B2 8/2010 Griffiths et al.
7,778,004 B2 8/2010 Nerheim et al.
7,779,737 B2 8/2010 Newman, Jr. et al.
7,780,054 B2 8/2010 Wales
7,780,055 B2 8/2010 Scirica et al.
7,780,309 B2 8/2010 McMillan et al.
7,780,663 B2 8/2010 Yates et al.
7,780,685 B2 8/2010 Hunt et al.
7,784,662 B2 8/2010 Wales et al.
7,784,663 B2 8/2010 Shelton, IV
7,787,256 B2 8/2010 Chan et al.
7,789,283 B2 9/2010 Shah
7,789,875 B2 9/2010 Brock et al.
7,789,883 B2 9/2010 Takashino et al.
7,789,889 B2 9/2010 Zubik et al.
7,793,812 B2 9/2010 Moore et al.
7,794,475 B2 9/2010 Hess et al.
7,798,386 B2 9/2010 Schall et al.
7,799,039 B2 9/2010 Shelton, IV et al.
7,799,044 B2 9/2010 Johnston et al.
7,799,965 B2 9/2010 Patel et al.
7,803,151 B2 9/2010 Whitman
7,806,871 B2 10/2010 Li et al.
7,806,891 B2 10/2010 Nowlin et al.
7,810,690 B2 10/2010 Bilotti et al.
7,810,691 B2 10/2010 Boyden et al.
7,810,692 B2 10/2010 Hall et al.
7,810,693 B2 10/2010 Broehl et al.
7,811,275 B2 10/2010 Birk et al.
7,814,816 B2 10/2010 Alberti et al.
7,815,092 B2 10/2010 Whitman et al.
7,815,565 B2 10/2010 Stefanchik et al.
7,815,662 B2 10/2010 Spivey et al.
7,819,296 B2 10/2010 Hueil et al.
7,819,297 B2 10/2010 Doll et al.
7,819,298 B2 10/2010 Hall et al.
7,819,299 B2 10/2010 Shelton, IV et al.
7,819,799 B2 10/2010 Merril et al.
7,819,884 B2 10/2010 Lee et al.
7,819,886 B2 10/2010 Whitfield et al.
7,823,592 B2 11/2010 Bettuchi et al.
7,823,760 B2 11/2010 Zemlok et al.
7,824,401 B2 11/2010 Manzo et al.
7,824,422 B2 11/2010 Benchetrit
7,824,426 B2 11/2010 Racenet et al.
7,828,189 B2 11/2010 Holsten et al.
7,828,794 B2 11/2010 Sartor
7,828,808 B2 11/2010 Hinman et al.
7,831,292 B2 11/2010 Quaid et al.
7,832,408 B2 11/2010 Shelton, IV et al.
7,832,611 B2 11/2010 Boyden et al.
7,832,612 B2 11/2010 Baxter, III et al.
7,833,234 B2 11/2010 Bailly et al.
7,835,823 B2 11/2010 Sillman et al.
7,836,400 B2 11/2010 May et al.
7,837,079 B2 11/2010 Holsten et al.
7,837,080 B2 11/2010 Schwemberger
7,837,081 B2 11/2010 Holsten et al.
7,837,425 B2 11/2010 Saeki et al.
7,837,685 B2 11/2010 Weinberg et al.
7,837,694 B2 11/2010 Tethrake et al.
7,838,789 B2 11/2010 Stoffers et al.
7,839,109 B2 11/2010 Carmen, Jr. et al.
7,841,503 B2 11/2010 Sonnenschein et al.
7,842,025 B2 11/2010 Coleman et al.
7,842,028 B2 11/2010 Lee
7,843,158 B2 11/2010 Prisco
7,845,533 B2 12/2010 Marczyk et al.
7,845,534 B2 12/2010 Viola et al.
7,845,535 B2 12/2010 Scircia
7,845,536 B2 12/2010 Viola et al.
7,845,537 B2 12/2010 Shelton, IV et al.
7,846,085 B2 12/2010 Silverman et al.
7,846,149 B2 12/2010 Jankowski
7,848,066 B2 12/2010 Yanagishima
7,850,623 B2 12/2010 Griffin et al.
7,850,642 B2 12/2010 Moll et al.
7,850,982 B2 12/2010 Stopek et al.
7,854,735 B2 12/2010 Houser et al.
7,854,736 B2 12/2010 Ryan

(56) **References Cited**

U.S. PATENT DOCUMENTS

7,857,183 B2 12/2010 Shelton, IV
7,857,184 B2 12/2010 Viola
7,857,185 B2 12/2010 Swayze et al.
7,857,186 B2 12/2010 Baxter, III et al.
7,857,813 B2 12/2010 Schmitz et al.
7,861,906 B2 1/2011 Doll et al.
7,862,502 B2 1/2011 Pool et al.
7,862,546 B2 1/2011 Conlon et al.
7,862,579 B2 1/2011 Ortiz et al.
7,866,525 B2 1/2011 Scirica
7,866,527 B2 1/2011 Hall et al.
7,866,528 B2 1/2011 Olson et al.
7,870,989 B2 1/2011 Viola et al.
7,871,418 B2 1/2011 Thompson et al.
7,871,440 B2 1/2011 Schwartz et al.
7,875,055 B2 1/2011 Cichocki, Jr.
7,879,063 B2 2/2011 Khosravi
7,879,070 B2 2/2011 Ortiz et al.
7,883,461 B2 2/2011 Albrecht et al.
7,883,465 B2 2/2011 Donofrio et al.
7,886,951 B2 2/2011 Hessler
7,886,952 B2 2/2011 Scirica et al.
7,887,530 B2 2/2011 Zemlok et al.
7,887,535 B2 2/2011 Lands et al.
7,887,536 B2 2/2011 Johnson et al.
7,887,563 B2 2/2011 Cummins
7,891,531 B1 2/2011 Ward
7,891,532 B2 2/2011 Mastri et al.
7,892,200 B2 2/2011 Birk et al.
7,892,245 B2 2/2011 Liddicoat et al.
7,893,586 B2 2/2011 West et al.
7,896,214 B2 3/2011 Farascioni
7,896,215 B2 3/2011 Adams et al.
7,896,869 B2 3/2011 DiSilvestro et al.
7,896,877 B2 3/2011 Hall et al.
7,896,895 B2 3/2011 Boudreaux et al.
7,896,897 B2 3/2011 Gresham et al.
7,898,198 B2 3/2011 Murphree
7,900,805 B2 3/2011 Shelton, IV et al.
7,900,806 B2 3/2011 Chen et al.
7,901,381 B2 3/2011 Birk et al.
7,905,380 B2 3/2011 Shelton, IV et al.
7,905,381 B2 3/2011 Baxter, III et al.
7,905,881 B2 3/2011 Masuda et al.
7,905,889 B2 3/2011 Catanese, III et al.
7,905,890 B2 3/2011 Whitfield et al.
7,905,902 B2 3/2011 Huitema et al.
7,909,039 B2 3/2011 Hur
7,909,191 B2 3/2011 Baker et al.
7,909,220 B2 3/2011 Viola
7,909,221 B2 3/2011 Viola et al.
7,909,224 B2 3/2011 Prommersberger
7,913,891 B2 3/2011 Doll et al.
7,913,893 B2 3/2011 Mastri et al.
7,914,543 B2 3/2011 Roth et al.
7,914,551 B2 3/2011 Ortiz et al.
7,918,230 B2 4/2011 Whitman et al.
7,918,376 B1 4/2011 Knodel et al.
7,918,377 B2 4/2011 Measamer et al.
7,918,845 B2 4/2011 Saadat et al.
7,918,848 B2 4/2011 Lau et al.
7,918,861 B2 4/2011 Brock et al.
7,918,867 B2 4/2011 Dana et al.
7,922,061 B2 4/2011 Shelton, IV et al.
7,922,063 B2 4/2011 Zemlok et al.
7,922,743 B2 4/2011 Heinrich et al.
7,923,144 B2 4/2011 Kohn et al.
7,926,691 B2 4/2011 Viola et al.
7,927,328 B2 4/2011 Orszulak et al.
7,928,281 B2 4/2011 Augustine
7,930,040 B1 4/2011 Kelsch et al.
7,930,065 B2 4/2011 Larkin et al.
7,931,660 B2 4/2011 Aranyi et al.
7,931,695 B2 4/2011 Ringeisen
7,931,877 B2 4/2011 Steffens et al.
7,934,630 B2 5/2011 Shelton, IV et al.
7,934,631 B2 5/2011 Balbierz et al.
7,934,896 B2 5/2011 Schnier
7,935,773 B2 5/2011 Hadba et al.
7,936,142 B2 5/2011 Otsuka et al.
7,938,307 B2 5/2011 Bettuchi
7,941,865 B2 5/2011 Seman, Jr. et al.
7,942,303 B2 5/2011 Shah
7,942,890 B2 5/2011 D'Agostino et al.
7,944,175 B2 5/2011 Mori et al.
7,945,792 B2 5/2011 Cherpantier
7,945,798 B2 5/2011 Carlson et al.
7,946,453 B2 5/2011 Voegele et al.
7,947,011 B2 5/2011 Birk et al.
7,950,560 B2 5/2011 Zemlok et al.
7,950,561 B2 5/2011 Aranyi
7,951,071 B2 5/2011 Whitman et al.
7,951,166 B2 5/2011 Orban, III et al.
7,954,682 B2 6/2011 Giordano et al.
7,954,684 B2 6/2011 Boudreaux
7,954,685 B2 6/2011 Viola
7,954,686 B2 6/2011 Baxter, III et al.
7,954,687 B2 6/2011 Zemlok et al.
7,955,253 B2 6/2011 Ewers et al.
7,955,257 B2 6/2011 Frasier et al.
7,955,322 B2 6/2011 Devengenzo et al.
7,955,327 B2 6/2011 Sartor et al.
7,955,380 B2 6/2011 Chu et al.
7,959,050 B2 6/2011 Smith et al.
7,959,051 B2 6/2011 Smith et al.
7,959,052 B2 6/2011 Sonnenschein et al.
7,963,432 B2 6/2011 Knodel et al.
7,963,433 B2 6/2011 Whitman et al.
7,963,913 B2 6/2011 Devengenzo et al.
7,963,963 B2 6/2011 Francischelli et al.
7,963,964 B2 6/2011 Santilli et al.
7,964,206 B2 6/2011 Suokas et al.
7,966,236 B2 6/2011 Noriega et al.
7,966,799 B2 6/2011 Morgan et al.
7,967,178 B2 6/2011 Scirica et al.
7,967,179 B2 6/2011 Olson et al.
7,967,180 B2 6/2011 Scirica
7,967,181 B2 6/2011 Viola et al.
7,967,791 B2 6/2011 Franer et al.
7,967,839 B2 6/2011 Flock et al.
7,972,298 B2 7/2011 Wallace et al.
7,972,315 B2 7/2011 Birk et al.
7,976,213 B2 7/2011 Bertolotti et al.
7,976,563 B2 7/2011 Summerer
7,979,137 B2 7/2011 Tracey et al.
7,980,443 B2 7/2011 Scheib et al.
7,981,132 B2 7/2011 Dubrul et al.
7,987,405 B2 7/2011 Turner et al.
7,988,015 B2 8/2011 Mason, II et al.
7,988,026 B2 8/2011 Knodel et al.
7,988,027 B2 8/2011 Olson et al.
7,988,028 B2 8/2011 Farascioni et al.
7,988,779 B2 8/2011 Disalvo et al.
7,992,757 B2 8/2011 Wheeler et al.
7,993,360 B2 8/2011 Hacker et al.
7,994,670 B2 8/2011 Ji
7,997,054 B2 8/2011 Bertsch et al.
7,997,468 B2 8/2011 Farascioni
7,997,469 B2 8/2011 Olson et al.
8,002,696 B2 8/2011 Suzuki
8,002,784 B2 8/2011 Jinno et al.
8,002,785 B2 8/2011 Weiss et al.
8,002,795 B2 8/2011 Beetel
8,006,365 B2 8/2011 Levin et al.
8,006,885 B2 8/2011 Marczyk
8,006,889 B2 8/2011 Adams et al.
8,007,370 B2 8/2011 Hirsch et al.
8,007,465 B2 8/2011 Birk et al.
8,007,479 B2 8/2011 Birk et al.
8,007,511 B2 8/2011 Brock et al.
8,007,513 B2 8/2011 Nalagatla et al.
8,011,550 B2 9/2011 Aranyi et al.
8,011,551 B2 9/2011 Marczyk et al.
8,011,553 B2 9/2011 Mastri et al.

(56) **References Cited**

U.S. PATENT DOCUMENTS

8,011,555 B2 9/2011 Tarinelli et al.
8,012,170 B2 9/2011 Whitman et al.
8,016,176 B2 9/2011 Kasvikis et al.
8,016,177 B2 9/2011 Bettuchi et al.
8,016,178 B2 9/2011 Olson et al.
8,016,849 B2 9/2011 Wenchell
8,016,855 B2 9/2011 Whitman et al.
8,016,858 B2 9/2011 Whitman
8,016,881 B2 9/2011 Furst
8,020,742 B2 9/2011 Marczyk
8,020,743 B2 9/2011 Shelton, IV
8,021,375 B2 9/2011 Aldrich et al.
8,025,199 B2 9/2011 Whitman et al.
8,025,896 B2 9/2011 Malaviya et al.
8,028,882 B2 10/2011 Viola
8,028,883 B2 10/2011 Stopek
8,028,884 B2 10/2011 Sniffin et al.
8,028,885 B2 10/2011 Smith et al.
8,029,510 B2 10/2011 Hoegerle
8,031,069 B2 10/2011 Cohn et al.
8,033,438 B2 10/2011 Scirica
8,033,439 B2 10/2011 Racenet et al.
8,033,440 B2 10/2011 Wenchell et al.
8,034,077 B2 10/2011 Smith et al.
8,034,337 B2 10/2011 Simard
8,034,363 B2 10/2011 Li et al.
8,035,487 B2 10/2011 Malackowski
8,037,591 B2 10/2011 Spivey et al.
8,038,045 B2 10/2011 Bettuchi et al.
8,038,046 B2 10/2011 Smith et al.
8,038,686 B2 10/2011 Huitema et al.
8,043,207 B2 10/2011 Adams
8,043,328 B2 10/2011 Hahnen et al.
8,044,536 B2 10/2011 Nguyen et al.
8,044,604 B2 10/2011 Hagino et al.
8,047,236 B2 11/2011 Perry
8,048,503 B2 11/2011 Farnsworth et al.
8,052,636 B2 11/2011 Moll et al.
8,056,787 B2 11/2011 Boudreaux et al.
8,056,788 B2 11/2011 Mastri et al.
8,056,789 B1 11/2011 White et al.
8,057,508 B2 11/2011 Shelton, IV
8,058,771 B2 11/2011 Giordano et al.
8,060,250 B2 11/2011 Reiland et al.
8,061,014 B2 11/2011 Smith et al.
8,061,576 B2 11/2011 Cappola
8,062,236 B2 11/2011 Soltz
8,062,330 B2 11/2011 Prommersberger et al.
8,063,619 B2 11/2011 Zhu et al.
8,066,158 B2 11/2011 Vogel et al.
8,066,166 B2 11/2011 Demmy et al.
8,066,167 B2 11/2011 Measamer et al.
8,066,168 B2 11/2011 Vidal et al.
8,066,720 B2 11/2011 Knodel et al.
D650,074 S 12/2011 Hunt et al.
8,070,033 B2 12/2011 Milliman et al.
8,070,035 B2 12/2011 Holsten et al.
8,070,743 B2 12/2011 Kagan et al.
8,074,858 B2 12/2011 Marczyk
8,074,861 B2 12/2011 Ehrenfels et al.
8,075,476 B2 12/2011 Vargas
8,075,571 B2 12/2011 Vitali et al.
8,079,950 B2 12/2011 Stern et al.
8,079,989 B2 12/2011 Birk et al.
8,080,004 B2 12/2011 Downey et al.
8,083,118 B2 12/2011 Milliman et al.
8,083,119 B2 12/2011 Prommersberger
8,083,120 B2 12/2011 Shelton, IV et al.
8,084,001 B2 12/2011 Burns et al.
8,084,969 B2 12/2011 David et al.
8,085,013 B2 12/2011 Wei et al.
8,087,563 B2 1/2012 Milliman et al.
8,089,509 B2 1/2012 Chatenever et al.
8,091,753 B2 1/2012 Viola
8,091,756 B2 1/2012 Viola
8,092,443 B2 1/2012 Bischoff
8,092,932 B2 1/2012 Phillips et al.
8,093,572 B2 1/2012 Kuduvalli
8,096,458 B2 1/2012 Hessler
8,097,017 B2 1/2012 Viola
8,100,310 B2 1/2012 Zemlok
8,100,824 B2 1/2012 Hegeman et al.
8,100,872 B2 1/2012 Patel
8,102,278 B2 1/2012 Deck et al.
8,105,350 B2 1/2012 Lee et al.
8,107,925 B2 1/2012 Natsuno et al.
8,108,033 B2 1/2012 Drew et al.
8,108,072 B2 1/2012 Zhao et al.
8,109,426 B2 2/2012 Milliman et al.
8,110,208 B1 2/2012 Hen
8,113,405 B2 2/2012 Milliman
8,113,408 B2 2/2012 Wenchell et al.
8,113,410 B2 2/2012 Hall et al.
8,114,017 B2 2/2012 Bacher
8,114,100 B2 2/2012 Smith et al.
8,118,206 B2 2/2012 Zand et al.
8,118,207 B2 2/2012 Racenet et al.
8,120,301 B2 2/2012 Goldberg et al.
8,122,128 B2 2/2012 Burke, II et al.
8,123,103 B2 2/2012 Milliman
8,123,523 B2 2/2012 Carron et al.
8,123,766 B2 2/2012 Bauman et al.
8,123,767 B2 2/2012 Bauman et al.
8,125,168 B2 2/2012 Johnson et al.
8,127,975 B2 3/2012 Olson et al.
8,127,976 B2 3/2012 Scirica et al.
8,128,624 B2 3/2012 Couture et al.
8,128,643 B2 3/2012 Aranyi et al.
8,128,645 B2 3/2012 Sonnenschein et al.
8,128,662 B2 3/2012 Altarac et al.
8,132,703 B2 3/2012 Milliman et al.
8,132,705 B2 3/2012 Viola et al.
8,132,706 B2 3/2012 Marczyk et al.
8,134,306 B2 3/2012 Drader et al.
8,136,711 B2 3/2012 Beardsley et al.
8,136,712 B2 3/2012 Zingman
8,136,713 B2 3/2012 Hathaway et al.
8,137,339 B2 3/2012 Jinno et al.
8,140,417 B2 3/2012 Shibata
8,141,762 B2 3/2012 Bedi et al.
8,141,763 B2 3/2012 Milliman
8,142,200 B2 3/2012 Crunkilton et al.
8,142,425 B2 3/2012 Eggers
8,142,461 B2 3/2012 Houser et al.
8,142,515 B2 3/2012 Therin et al.
8,143,520 B2 3/2012 Cutler
8,146,790 B2 4/2012 Milliman
8,147,421 B2 4/2012 Farquhar et al.
8,147,456 B2 4/2012 Fisher et al.
8,147,485 B2 4/2012 Wham et al.
8,152,041 B2 4/2012 Kostrzewski
8,152,756 B2 4/2012 Webster et al.
8,154,239 B2 4/2012 Katsuki et al.
8,157,145 B2 4/2012 Shelton, IV et al.
8,157,148 B2 4/2012 Scirica
8,157,151 B2 4/2012 Ingmanson et al.
8,157,152 B2 4/2012 Holsten et al.
8,157,153 B2 4/2012 Shelton, IV et al.
8,157,793 B2 4/2012 Omori et al.
8,161,977 B2 4/2012 Shelton, IV et al.
8,162,138 B2 4/2012 Bettenhausen et al.
8,162,197 B2 4/2012 Mastri et al.
8,162,668 B2 4/2012 Toly
8,162,933 B2 4/2012 Francischelli et al.
8,162,965 B2 4/2012 Reschke et al.
8,167,185 B2 5/2012 Shelton, IV et al.
8,167,622 B2 5/2012 Zhou
8,167,895 B2 5/2012 D'Agostino et al.
8,167,898 B1 5/2012 Schaller et al.
8,170,241 B2 5/2012 Roe et al.
8,172,004 B2 5/2012 Ho
8,172,120 B2 5/2012 Boyden et al.
8,172,122 B2 5/2012 Kasvikis et al.
8,172,124 B2 5/2012 Shelton, IV et al.

(56) **References Cited**

U.S. PATENT DOCUMENTS

8,177,776 B2 5/2012 Humayun et al.
8,177,797 B2 5/2012 Shimoji et al.
8,179,705 B2 5/2012 Chapuis
8,180,458 B2 5/2012 Kane et al.
8,181,839 B2 5/2012 Beetel
8,181,840 B2 5/2012 Milliman
8,182,422 B2 5/2012 Bayer et al.
8,183,807 B2 5/2012 Tsai et al.
8,186,555 B2 5/2012 Shelton, IV et al.
8,186,556 B2 5/2012 Viola
8,186,558 B2 5/2012 Sapienza
8,186,560 B2 5/2012 Hess et al.
8,191,752 B2 6/2012 Scirica
8,192,460 B2 6/2012 Orban, III et al.
8,192,651 B2 6/2012 Young et al.
8,196,795 B2 6/2012 Moore et al.
8,196,796 B2 6/2012 Shelton, IV et al.
8,197,501 B2 6/2012 Shadeck et al.
8,197,502 B2 6/2012 Smith et al.
8,197,837 B2 6/2012 Jamiolkowski et al.
8,201,720 B2 6/2012 Hessler
8,201,721 B2 6/2012 Zemlok et al.
8,202,549 B2 6/2012 Stucky et al.
8,205,779 B2 6/2012 Ma et al.
8,205,780 B2 6/2012 Sorrentino et al.
8,205,781 B2 6/2012 Baxter, III et al.
8,210,411 B2 7/2012 Yates et al.
8,210,414 B2 7/2012 Bettuchi et al.
8,210,415 B2 7/2012 Ward
8,210,416 B2 7/2012 Milliman et al.
8,210,721 B2 7/2012 Chen et al.
8,211,125 B2 7/2012 Spivey
8,214,019 B2 7/2012 Govari et al.
8,215,531 B2 7/2012 Shelton, IV et al.
8,215,532 B2 7/2012 Marczyk
8,215,533 B2 7/2012 Viola et al.
8,220,468 B2 7/2012 Cooper et al.
8,220,688 B2 7/2012 Laurent et al.
8,220,690 B2 7/2012 Hess et al.
8,221,424 B2 7/2012 Cha
8,225,799 B2 7/2012 Bettuchi
8,225,979 B2 7/2012 Farascioni et al.
8,226,553 B2 7/2012 Shelton, IV et al.
8,226,635 B2 7/2012 Petrie et al.
8,226,675 B2 7/2012 Houser et al.
8,226,715 B2 7/2012 Hwang et al.
8,227,946 B2 7/2012 Kim
8,228,048 B2 7/2012 Spencer
8,229,549 B2 7/2012 Whitman et al.
8,231,040 B2 7/2012 Zemlok et al.
8,231,042 B2 7/2012 Hessler et al.
8,231,043 B2 7/2012 Tarinelli et al.
8,235,272 B2 8/2012 Nicholas et al.
8,236,010 B2 8/2012 Ortiz et al.
8,236,020 B2 8/2012 Smith et al.
8,237,388 B2 8/2012 Jinno et al.
8,240,537 B2 8/2012 Marczyk
8,241,271 B2 8/2012 Millman et al.
8,241,284 B2 8/2012 Dycus et al.
8,241,308 B2 8/2012 Kortenbach et al.
8,241,322 B2 8/2012 Whitman et al.
8,245,594 B2 8/2012 Rogers et al.
8,245,898 B2 8/2012 Smith et al.
8,245,899 B2 8/2012 Swensgard et al.
8,245,900 B2 8/2012 Scirica
8,245,901 B2 8/2012 Stopek
8,246,608 B2 8/2012 Omori et al.
8,246,637 B2 8/2012 Viola et al.
8,256,654 B2 9/2012 Bettuchi et al.
8,256,655 B2 9/2012 Sniffin et al.
8,256,656 B2 9/2012 Milliman et al.
8,257,251 B2 9/2012 Shelton, IV et al.
8,257,356 B2 9/2012 Bleich et al.
8,257,386 B2 9/2012 Lee et al.
8,257,391 B2 9/2012 Orban, III et al.
8,257,634 B2 9/2012 Scirica
8,258,745 B2 9/2012 Smith et al.
8,262,655 B2 9/2012 Ghabrial et al.
8,267,300 B2 9/2012 Boudreaux
8,267,924 B2 9/2012 Zemlok et al.
8,267,946 B2 9/2012 Whitfield et al.
8,267,951 B2 9/2012 Whayne et al.
8,269,121 B2 9/2012 Smith
8,272,553 B2 9/2012 Mastri et al.
8,272,554 B2 9/2012 Whitman et al.
8,272,918 B2 9/2012 Lam
8,273,404 B2 9/2012 Dave et al.
8,276,801 B2 10/2012 Zemlok et al.
8,276,802 B2 10/2012 Kostrzewski
8,277,473 B2 10/2012 Sunaoshi et al.
8,281,446 B2 10/2012 Moskovich
8,281,973 B2 10/2012 Wenchell et al.
8,281,974 B2 10/2012 Hessler et al.
8,282,654 B2 10/2012 Ferrari et al.
8,285,367 B2 10/2012 Hyde et al.
8,286,723 B2 10/2012 Puzio et al.
8,286,845 B2 10/2012 Perry et al.
8,286,846 B2 10/2012 Smith et al.
8,287,487 B2 10/2012 Estes
8,287,522 B2 10/2012 Moses et al.
8,287,561 B2 10/2012 Nunez et al.
8,292,147 B2 10/2012 Viola
8,292,150 B2 10/2012 Bryant
8,292,151 B2 10/2012 Viola
8,292,152 B2 10/2012 Milliman et al.
8,292,155 B2 10/2012 Shelton, IV et al.
8,292,157 B2 10/2012 Smith et al.
8,292,801 B2 10/2012 Dejima et al.
8,292,888 B2 10/2012 Whitman
8,298,161 B2 10/2012 Vargas
8,298,189 B2 10/2012 Fisher et al.
8,298,233 B2 10/2012 Mueller
8,298,677 B2 10/2012 Wiesner et al.
8,302,323 B2 11/2012 Fortier et al.
8,308,040 B2 11/2012 Huang et al.
8,308,042 B2 11/2012 Aranyi
8,308,043 B2 11/2012 Bindra et al.
8,308,046 B2 11/2012 Prommersberger
8,308,659 B2 11/2012 Scheibe et al.
8,308,725 B2 11/2012 Bell et al.
8,310,188 B2 11/2012 Nakai
8,313,496 B2 11/2012 Sauer et al.
8,313,509 B2 11/2012 Kostrzewski
8,317,070 B2 11/2012 Hueil et al.
8,317,071 B1 11/2012 Knodel
8,317,074 B2 11/2012 Ortiz et al.
8,317,437 B2 11/2012 Merkley et al.
8,317,744 B2 11/2012 Kirschenman
8,317,790 B2 11/2012 Bell et al.
8,319,002 B2 11/2012 Daniels et al.
8,322,455 B2 12/2012 Shelton, IV et al.
8,322,589 B2 12/2012 Boudreaux
8,322,590 B2 12/2012 Patel et al.
8,322,901 B2 12/2012 Michelotti
8,323,789 B2 12/2012 Rozhin et al.
8,328,061 B2 12/2012 Kasvikis
8,328,062 B2 12/2012 Viola
8,328,063 B2 12/2012 Milliman et al.
8,328,064 B2 12/2012 Racenet et al.
8,328,802 B2 12/2012 Deville et al.
8,328,823 B2 12/2012 Aranyi et al.
8,333,313 B2 12/2012 Boudreaux et al.
8,333,691 B2 12/2012 Schaaf
8,333,764 B2 12/2012 Francischelli et al.
8,333,779 B2 12/2012 Smith et al.
8,334,468 B2 12/2012 Palmer et al.
8,336,753 B2 12/2012 Olson et al.
8,336,754 B2 12/2012 Cappola et al.
8,342,377 B2 1/2013 Milliman et al.
8,342,378 B2 1/2013 Marczyk et al.
8,342,379 B2 1/2013 Whitman et al.
8,343,150 B2 1/2013 Artale
8,347,978 B2 1/2013 Forster et al.
8,348,123 B2 1/2013 Scirica et al.

(56) **References Cited**

U.S. PATENT DOCUMENTS

8,348,124 B2 1/2013 Scirica
8,348,125 B2 1/2013 Viola et al.
8,348,126 B2 1/2013 Olson et al.
8,348,127 B2 1/2013 Marczyk
8,348,129 B2 1/2013 Bedi et al.
8,348,130 B2 1/2013 Shah et al.
8,348,131 B2 1/2013 Omaits et al.
8,348,837 B2 1/2013 Wenchell
8,348,959 B2 1/2013 Wolford et al.
8,348,972 B2 1/2013 Soltz et al.
8,349,987 B2 1/2013 Kapiamba et al.
8,352,004 B2 1/2013 Mannheimer et al.
8,353,437 B2 1/2013 Boudreaux
8,353,438 B2 1/2013 Baxter, III et al.
8,353,439 B2 1/2013 Baxter, III et al.
8,356,740 B1 1/2013 Knodel
8,357,144 B2 1/2013 Whitman et al.
8,357,161 B2 1/2013 Mueller
8,360,296 B2 1/2013 Zingman
8,360,297 B2 1/2013 Shelton, IV et al.
8,360,298 B2 1/2013 Farascioni et al.
8,360,299 B2 1/2013 Zemlok et al.
8,361,501 B2 1/2013 DiTizio et al.
8,365,973 B1 2/2013 White et al.
8,365,975 B1 2/2013 Manoux et al.
8,365,976 B2 2/2013 Hess et al.
8,366,559 B2 2/2013 Papenfuss et al.
8,366,787 B2 2/2013 Brown et al.
8,371,393 B2 2/2013 Higuchi et al.
8,371,491 B2 2/2013 Huitema et al.
8,371,492 B2 2/2013 Aranyi et al.
8,371,493 B2 2/2013 Aranyi et al.
8,371,494 B2 2/2013 Racenet et al.
8,372,094 B2 2/2013 Bettuchi et al.
8,376,865 B2 2/2013 Forster et al.
8,377,029 B2 2/2013 Nagao et al.
8,377,044 B2 2/2013 Coe et al.
8,382,773 B2 2/2013 Whitfield et al.
8,382,790 B2 2/2013 Uenohara et al.
8,387,848 B2 3/2013 Johnson et al.
8,388,633 B2 3/2013 Rousseau et al.
8,389,588 B2 3/2013 Ringeisen et al.
8,393,513 B2 3/2013 Jankowski
8,393,514 B2 3/2013 Shelton, IV et al.
8,393,516 B2 3/2013 Kostrzewski
8,397,971 B2 3/2013 Yates et al.
8,397,973 B1 3/2013 Hausen
8,398,633 B2 3/2013 Mueller
8,398,669 B2 3/2013 Kim
8,398,673 B2 3/2013 Hinchliffe et al.
8,400,851 B2 3/2013 Byun
8,403,138 B2 3/2013 Weisshaupt et al.
8,403,198 B2 3/2013 Sorrentino et al.
8,403,832 B2 3/2013 Cunningham et al.
8,403,945 B2 3/2013 Whitfield et al.
8,403,946 B2 3/2013 Whitfield et al.
8,403,950 B2 3/2013 Palmer et al.
8,408,439 B2 4/2013 Huang et al.
8,408,442 B2 4/2013 Racenet et al.
8,409,079 B2 4/2013 Okamoto et al.
8,409,174 B2 4/2013 Omori
8,409,175 B2 4/2013 Lee et al.
8,409,222 B2 4/2013 Whitfield et al.
8,409,223 B2 4/2013 Sorrentino et al.
8,411,500 B2 4/2013 Gapihan et al.
8,413,661 B2 4/2013 Rousseau et al.
8,413,870 B2 4/2013 Pastorelli et al.
8,413,871 B2 4/2013 Racenet et al.
8,413,872 B2 4/2013 Patel
8,414,577 B2 4/2013 Boudreaux et al.
8,418,073 B2 4/2013 Mohr et al.
8,418,906 B2 4/2013 Farascioni et al.
8,418,908 B1 4/2013 Beardsley
8,418,909 B2 4/2013 Kostrzewski
8,419,717 B2 4/2013 Diolaiti et al.
8,419,747 B2 4/2013 Hinman et al.
8,419,754 B2 4/2013 Laby et al.
8,423,182 B2 4/2013 Robinson et al.
8,424,737 B2 4/2013 Scirica
8,424,739 B2 4/2013 Racenet et al.
8,424,740 B2 4/2013 Shelton, IV et al.
8,424,741 B2 4/2013 McGuckin, Jr. et al.
8,425,600 B2 4/2013 Maxwell
8,427,430 B2 4/2013 Lee et al.
8,430,292 B2 4/2013 Patel et al.
8,430,892 B2 4/2013 Bindra et al.
8,430,898 B2 4/2013 Wiener et al.
8,435,257 B2 5/2013 Smith et al.
8,439,246 B1 5/2013 Knodel
8,444,036 B2 5/2013 Shelton, IV
8,444,037 B2 5/2013 Nicholas et al.
8,444,549 B2 5/2013 Viola et al.
8,453,904 B2 6/2013 Eskaros et al.
8,453,906 B2 6/2013 Huang et al.
8,453,907 B2 6/2013 Laurent et al.
8,453,908 B2 6/2013 Bedi et al.
8,453,912 B2 6/2013 Mastri et al.
8,453,914 B2 6/2013 Laurent et al.
8,454,495 B2 6/2013 Kawano et al.
8,454,628 B2 6/2013 Smith et al.
8,454,640 B2 6/2013 Johnston et al.
8,457,757 B2 6/2013 Cauller et al.
8,459,520 B2 6/2013 Giordano et al.
8,459,521 B2 6/2013 Zemlok et al.
8,459,524 B2 6/2013 Pribanic et al.
8,459,525 B2 6/2013 Yates et al.
8,464,922 B2 6/2013 Marczyk
8,464,923 B2 6/2013 Shelton, IV
8,464,924 B2 6/2013 Gresham et al.
8,464,925 B2 6/2013 Hull et al.
8,465,475 B2 6/2013 Isbell, Jr.
8,465,502 B2 6/2013 Zergiebel
8,465,515 B2 6/2013 Drew et al.
8,469,946 B2 6/2013 Sugita
8,469,973 B2 6/2013 Meade et al.
8,470,355 B2 6/2013 Skalla et al.
8,474,677 B2 7/2013 Woodard, Jr. et al.
8,475,453 B2 7/2013 Marczyk et al.
8,475,454 B1 7/2013 Alshemari
8,475,474 B2 7/2013 Bombard et al.
8,479,968 B2 7/2013 Hodgkinson et al.
8,479,969 B2 7/2013 Shelton, IV
8,480,703 B2 7/2013 Nicholas et al.
8,485,412 B2 7/2013 Shelton, IV et al.
8,485,413 B2 7/2013 Scheib et al.
8,485,970 B2 7/2013 Widenhouse et al.
8,487,199 B2 7/2013 Palmer et al.
8,490,851 B2 7/2013 Blier et al.
8,490,853 B2 7/2013 Criscuolo et al.
8,491,581 B2 7/2013 Deville et al.
8,491,603 B2 7/2013 Yeung et al.
8,496,154 B2 7/2013 Marczyk et al.
8,496,156 B2 7/2013 Sniffin et al.
8,496,683 B2 7/2013 Prommersberger et al.
8,499,992 B2 8/2013 Whitman et al.
8,499,993 B2 8/2013 Shelton, IV et al.
8,500,721 B2 8/2013 Jinno
8,500,762 B2 8/2013 Sholev et al.
8,502,091 B2 8/2013 Palmer et al.
8,505,799 B2 8/2013 Viola et al.
8,505,801 B2 8/2013 Ehrenfels et al.
8,506,555 B2 8/2013 Ruiz Morales
8,506,557 B2 8/2013 Zemlok et al.
8,506,580 B2 8/2013 Zergiebel et al.
8,506,581 B2 8/2013 Wingardner, III et al.
8,511,308 B2 8/2013 Hecox et al.
8,512,359 B2 8/2013 Whitman et al.
8,512,402 B2 8/2013 Marczyk et al.
8,517,239 B2 8/2013 Scheib et al.
8,517,241 B2 8/2013 Nicholas et al.
8,517,243 B2 8/2013 Giordano et al.
8,517,244 B2 8/2013 Shelton, IV et al.
8,518,024 B2 8/2013 Williams et al.
8,521,273 B2 8/2013 Kliman

(56) **References Cited**

U.S. PATENT DOCUMENTS

8,523,043 B2 9/2013 Ullrich et al.
8,523,881 B2 9/2013 Cabiri et al.
8,523,900 B2 9/2013 Jinno et al.
8,529,588 B2 9/2013 Ahlberg et al.
8,529,600 B2 9/2013 Woodard, Jr. et al.
8,529,819 B2 9/2013 Ostapoff et al.
8,532,747 B2 9/2013 Nock et al.
8,534,528 B2 9/2013 Shelton, IV
8,535,304 B2 9/2013 Sklar et al.
8,535,340 B2 9/2013 Allen
8,540,128 B2 9/2013 Shelton, IV et al.
8,540,129 B2 9/2013 Baxter, III et al.
8,540,130 B2 9/2013 Moore et al.
8,540,131 B2 9/2013 Swayze
8,540,133 B2 9/2013 Bedi et al.
8,540,733 B2 9/2013 Whitman et al.
8,540,735 B2 9/2013 Mitelberg et al.
8,550,984 B2 10/2013 Takemoto
8,551,076 B2 10/2013 Duval et al.
8,555,660 B2 10/2013 Takenaka et al.
8,556,151 B2 10/2013 Viola
8,556,918 B2 10/2013 Bauman et al.
8,556,935 B1 10/2013 Knodel et al.
8,560,147 B2 10/2013 Taylor et al.
8,561,617 B2 10/2013 Lindh et al.
8,561,870 B2 10/2013 Baxter, III et al.
8,561,871 B2 10/2013 Rajappa et al.
8,561,873 B2 10/2013 Ingmanson et al.
8,562,598 B2 10/2013 Falkenstein et al.
8,567,656 B2 10/2013 Shelton, IV et al.
8,568,416 B2 10/2013 Schmitz et al.
8,568,425 B2 10/2013 Ross et al.
8,573,459 B2 11/2013 Smith et al.
8,573,461 B2 11/2013 Shelton, IV et al.
8,573,462 B2 11/2013 Smith et al.
8,573,465 B2 11/2013 Shelton, IV
8,574,199 B2 11/2013 von Bulow et al.
8,574,263 B2 11/2013 Mueller
8,575,880 B2 11/2013 Grantz
8,579,176 B2 11/2013 Smith et al.
8,579,178 B2 11/2013 Holsten et al.
8,579,897 B2 11/2013 Vakharia et al.
8,579,937 B2 11/2013 Gresham
8,584,919 B2 11/2013 Hueil et al.
8,584,920 B2 11/2013 Hodgkinson
8,584,921 B2 11/2013 Scirica
8,585,583 B2 11/2013 Sakaguchi et al.
8,585,721 B2 11/2013 Kirsch
8,590,760 B2 11/2013 Cummins et al.
8,590,762 B2 11/2013 Hess et al.
8,590,764 B2 11/2013 Hartwick et al.
8,596,515 B2 12/2013 Okoniewski
8,597,745 B2 12/2013 Farnsworth et al.
8,599,450 B2 12/2013 Kubo et al.
8,602,287 B2 12/2013 Yates et al.
8,602,288 B2 12/2013 Shelton, IV et al.
8,603,077 B2 12/2013 Cooper et al.
8,603,089 B2 12/2013 Viola
8,603,110 B2 12/2013 Maruyama et al.
8,603,135 B2 12/2013 Mueller
8,608,043 B2 12/2013 Scirica
8,608,044 B2 12/2013 Hueil et al.
8,608,045 B2 12/2013 Smith et al.
8,608,046 B2 12/2013 Laurent et al.
8,608,745 B2 12/2013 Guzman et al.
8,613,383 B2 12/2013 Beckman et al.
8,616,427 B2 12/2013 Viola
8,616,431 B2 12/2013 Timm et al.
8,622,274 B2 1/2014 Yates et al.
8,622,275 B2 1/2014 Baxter, III et al.
8,627,993 B2 1/2014 Smith et al.
8,627,995 B2 1/2014 Smith et al.
8,628,518 B2 1/2014 Blumenkranz et al.
8,628,545 B2 1/2014 Cabrera et al.
8,631,987 B2 1/2014 Shelton, IV et al.
8,631,992 B1 1/2014 Hausen et al.
8,631,993 B2 1/2014 Kostrzewski
8,632,462 B2 1/2014 Yoo et al.
8,632,525 B2 1/2014 Kerr et al.
8,632,535 B2 1/2014 Shelton, IV et al.
8,632,563 B2 1/2014 Nagase et al.
8,636,187 B2 1/2014 Hueil et al.
8,636,191 B2 1/2014 Meagher
8,636,193 B2 1/2014 Whitman et al.
8,636,736 B2 1/2014 Yates et al.
8,636,766 B2 1/2014 Milliman et al.
8,639,936 B2 1/2014 Hu et al.
8,640,788 B2 2/2014 Dachs, II et al.
8,646,674 B2 2/2014 Schulte et al.
8,647,258 B2 2/2014 Aranyi et al.
8,652,120 B2 2/2014 Giordano et al.
8,652,151 B2 2/2014 Lehman et al.
8,657,174 B2 2/2014 Yates et al.
8,657,175 B2 2/2014 Sonnenschein et al.
8,657,176 B2 2/2014 Shelton, IV et al.
8,657,177 B2 2/2014 Scirica et al.
8,657,178 B2 2/2014 Hueil et al.
8,657,482 B2 2/2014 Malackowski et al.
8,657,808 B2 2/2014 McPherson et al.
8,657,814 B2 2/2014 Werneth et al.
8,657,821 B2 2/2014 Palermo
8,662,370 B2 3/2014 Takei
8,663,106 B2 3/2014 Stivoric et al.
8,663,192 B2 3/2014 Hester et al.
8,663,245 B2 3/2014 Francischelli et al.
8,663,262 B2 3/2014 Smith et al.
8,663,270 B2 3/2014 Donnigan et al.
8,664,792 B2 3/2014 Rebsdorf
8,668,129 B2 3/2014 Olson
8,668,130 B2 3/2014 Hess et al.
8,672,206 B2 3/2014 Aranyi et al.
8,672,207 B2 3/2014 Shelton, IV et al.
8,672,208 B2 3/2014 Hess et al.
8,672,922 B2 3/2014 Loh et al.
8,672,935 B2 3/2014 Okada et al.
8,672,951 B2 3/2014 Smith et al.
8,673,210 B2 3/2014 Deshays
8,675,820 B2 3/2014 Baic et al.
8,678,263 B2 3/2014 Viola
8,679,093 B2 3/2014 Farra
8,679,098 B2 3/2014 Hart
8,679,137 B2 3/2014 Bauman et al.
8,679,154 B2 3/2014 Smith et al.
8,679,156 B2 3/2014 Smith et al.
8,679,454 B2 3/2014 Guire et al.
8,684,248 B2 4/2014 Milliman
8,684,249 B2 4/2014 Racenet et al.
8,684,250 B2 4/2014 Bettuchi et al.
8,684,253 B2 4/2014 Giordano et al.
8,684,962 B2 4/2014 Kirschenman et al.
8,685,004 B2 4/2014 Zemlock et al.
8,685,020 B2 4/2014 Weizman et al.
8,695,866 B2 4/2014 Leimbach et al.
8,696,665 B2 4/2014 Hunt et al.
8,701,958 B2 4/2014 Shelton, IV et al.
8,701,959 B2 4/2014 Shah
8,708,210 B2 4/2014 Zemlok et al.
8,708,211 B2 4/2014 Zemlok et al.
8,708,213 B2 4/2014 Shelton, IV et al.
8,714,352 B2 5/2014 Farascioni et al.
8,714,429 B2 5/2014 Demmy
8,714,430 B2 5/2014 Natarajan et al.
8,715,256 B2 5/2014 Greener
8,715,302 B2 5/2014 Ibrahim et al.
8,720,766 B2 5/2014 Hess et al.
8,721,630 B2 5/2014 Ortiz et al.
8,721,666 B2 5/2014 Schroeder et al.
8,727,197 B2 5/2014 Hess et al.
8,727,199 B2 5/2014 Wenchell
8,727,200 B2 5/2014 Roy
8,727,961 B2 5/2014 Ziv
8,728,099 B2 5/2014 Cohn et al.
8,728,119 B2 5/2014 Cummins
8,733,470 B2 5/2014 Matthias et al.

(56) **References Cited**

U.S. PATENT DOCUMENTS

8,733,612 B2 5/2014 Ma
8,733,613 B2 5/2014 Huitema et al.
8,733,614 B2 5/2014 Ross et al.
8,734,336 B2 5/2014 Bonadio et al.
8,734,359 B2 5/2014 Ibanez et al.
8,734,478 B2 5/2014 Widenhouse et al.
8,739,033 B2 5/2014 Rosenberg
8,739,417 B2 6/2014 Tokunaga et al.
8,740,034 B2 6/2014 Morgan et al.
8,740,037 B2 6/2014 Shelton, IV et al.
8,740,038 B2 6/2014 Shelton, IV et al.
8,740,987 B2 6/2014 Geremakis et al.
8,746,529 B2 6/2014 Shelton, IV et al.
8,746,530 B2 6/2014 Giordano et al.
8,746,533 B2 6/2014 Whitman et al.
8,746,535 B2 6/2014 Shelton, IV et al.
8,747,238 B2 6/2014 Shelton, IV et al.
8,747,441 B2 6/2014 Konieczynski et al.
8,752,264 B2 6/2014 Ackley et al.
8,752,699 B2 6/2014 Morgan et al.
8,752,747 B2 6/2014 Shelton, IV et al.
8,752,748 B2 6/2014 Whitman et al.
8,752,749 B2 6/2014 Moore et al.
8,757,287 B2 6/2014 Mak et al.
8,757,465 B2 6/2014 Woodard, Jr. et al.
8,758,235 B2 6/2014 Jaworek
8,758,366 B2 6/2014 McLean et al.
8,758,391 B2 6/2014 Swayze et al.
8,758,438 B2 6/2014 Boyce et al.
8,763,875 B2 7/2014 Morgan et al.
8,763,877 B2 7/2014 Schall et al.
8,763,879 B2 7/2014 Shelton, IV et al.
8,764,732 B2 7/2014 Hartwell
8,770,458 B2 7/2014 Scirica
8,770,459 B2 7/2014 Racenet et al.
8,770,460 B2 7/2014 Belzer
8,771,169 B2 7/2014 Whitman et al.
8,777,004 B2 7/2014 Shelton, IV et al.
8,777,082 B2 7/2014 Scirica
8,777,083 B2 7/2014 Racenet et al.
8,777,898 B2 7/2014 Suon et al.
8,783,541 B2 7/2014 Shelton, IV et al.
8,783,542 B2 7/2014 Riestenberg et al.
8,783,543 B2 7/2014 Shelton, IV et al.
8,784,304 B2 7/2014 Mikkaichi et al.
8,784,404 B2 7/2014 Doyle et al.
8,784,415 B2 7/2014 Malackowski et al.
8,789,737 B2 7/2014 Hodgkinson et al.
8,789,739 B2 7/2014 Swensgard
8,789,740 B2 7/2014 Baxter, III et al.
8,789,741 B2 7/2014 Baxter, III et al.
8,790,658 B2 7/2014 Cigarini et al.
8,790,684 B2 7/2014 Dave et al.
8,794,496 B2 8/2014 Scirica
8,794,497 B2 8/2014 Zingman
8,795,276 B2 8/2014 Dietz et al.
8,795,308 B2 8/2014 Valin
8,795,324 B2 8/2014 Kawai et al.
8,800,681 B2 8/2014 Rousson et al.
8,800,837 B2 8/2014 Zemlok
8,800,838 B2 8/2014 Shelton, IV
8,800,839 B2 8/2014 Beetel
8,800,840 B2 8/2014 Jankowski
8,800,841 B2 8/2014 Ellerhorst et al.
8,801,734 B2 8/2014 Shelton, IV et al.
8,801,735 B2 8/2014 Shelton, IV et al.
8,801,752 B2 8/2014 Fortier et al.
8,801,801 B2 8/2014 Datta et al.
8,806,973 B2 8/2014 Ross et al.
8,807,414 B2 8/2014 Ross et al.
8,808,161 B2 8/2014 Gregg et al.
8,808,274 B2 8/2014 Hartwell
8,808,294 B2 8/2014 Fox et al.
8,808,308 B2 8/2014 Boukhny et al.
8,808,311 B2 8/2014 Heinrich et al.
8,808,325 B2 8/2014 Hess et al.
8,810,197 B2 8/2014 Juergens
8,811,017 B2 8/2014 Fujii et al.
8,813,866 B2 8/2014 Suzuki
8,814,024 B2 8/2014 Woodard, Jr. et al.
8,814,025 B2 8/2014 Miller et al.
8,820,603 B2 9/2014 Shelton, IV et al.
8,820,605 B2 9/2014 Shelton, IV
8,820,606 B2 9/2014 Hodgkinson
8,820,607 B2 9/2014 Marczyk
8,822,934 B2 9/2014 Sayeh et al.
8,825,164 B2 9/2014 Tweden et al.
8,827,133 B2 9/2014 Shelton, IV et al.
8,827,134 B2 9/2014 Viola et al.
8,827,903 B2 9/2014 Shelton, IV et al.
8,833,219 B2 9/2014 Pierce
8,833,630 B2 9/2014 Milliman
8,833,632 B2 9/2014 Swensgard
8,834,498 B2 9/2014 Byrum et al.
8,840,003 B2 9/2014 Morgan et al.
8,840,603 B2 9/2014 Shelton, IV et al.
8,840,609 B2 9/2014 Stuebe
8,844,789 B2 9/2014 Shelton, IV et al.
8,851,215 B2 10/2014 Goto
8,851,354 B2 10/2014 Swensgard et al.
8,852,185 B2 10/2014 Twomey
8,852,199 B2 10/2014 Deslauriers et al.
8,857,693 B2 10/2014 Schuckmann et al.
8,857,694 B2 10/2014 Shelton, IV et al.
8,858,538 B2 10/2014 Belson et al.
8,858,571 B2 10/2014 Shelton, IV et al.
8,858,590 B2 10/2014 Shelton, IV et al.
8,864,007 B2 10/2014 Widenhouse et al.
8,864,009 B2 10/2014 Shelton, IV et al.
8,864,010 B2 10/2014 Williams
8,870,050 B2 10/2014 Hodgkinson
8,870,912 B2 10/2014 Brisson et al.
8,875,971 B2 11/2014 Hall et al.
8,875,972 B2 11/2014 Weisenburgh, II et al.
8,876,857 B2 11/2014 Burbank
8,876,858 B2 11/2014 Braun
8,887,979 B2 11/2014 Mastri et al.
8,888,688 B2 11/2014 Julian et al.
8,888,695 B2 11/2014 Piskun et al.
8,888,792 B2 11/2014 Harris et al.
8,888,809 B2 11/2014 Davison et al.
8,893,946 B2 11/2014 Boudreaux et al.
8,893,949 B2 11/2014 Shelton, IV et al.
8,894,647 B2 11/2014 Beardsley et al.
8,894,654 B2 11/2014 Anderson
8,899,460 B2 12/2014 Wojcicki
8,899,461 B2 12/2014 Farascioni
8,899,462 B2 12/2014 Kostrzewski et al.
8,899,463 B2 12/2014 Schall et al.
8,899,464 B2 12/2014 Hueil et al.
8,899,465 B2 12/2014 Shelton, IV et al.
8,899,466 B2 12/2014 Baxter, III et al.
8,905,287 B2 12/2014 Racenet et al.
8,905,977 B2 12/2014 Shelton et al.
8,910,846 B2 12/2014 Viola
8,911,426 B2 12/2014 Coppeta et al.
8,911,448 B2 12/2014 Stein
8,911,460 B2 12/2014 Neurohr et al.
8,911,471 B2 12/2014 Spivey et al.
8,920,433 B2 12/2014 Barrier et al.
8,920,435 B2 12/2014 Smith et al.
8,920,438 B2 12/2014 Aranyi et al.
8,920,443 B2 12/2014 Hiles et al.
8,920,444 B2 12/2014 Hiles et al.
8,922,163 B2 12/2014 Macdonald
8,925,782 B2 1/2015 Shelton, IV
8,925,783 B2 1/2015 Zemlok et al.
8,925,788 B2 1/2015 Hess et al.
8,926,506 B2 1/2015 Widenhouse et al.
8,926,598 B2 1/2015 Mollere et al.
8,931,576 B2 1/2015 Iwata
8,931,679 B2 1/2015 Kostrzewski
8,931,680 B2 1/2015 Milliman
8,931,682 B2 1/2015 Timm et al.

(56) **References Cited**

U.S. PATENT DOCUMENTS


| | | | |
|---|---|---|---|
| 8,936,614 | B2 | 1/2015 | Allen, IV |
| 8,939,343 | B2 | 1/2015 | Milliman et al. |
| 8,939,344 | B2 | 1/2015 | Olson et al. |
| 8,945,163 | B2 | 2/2015 | Voegele et al. |
| 8,955,732 | B2 | 2/2015 | Zemlok et al. |
| 8,956,342 | B1 | 2/2015 | Russo et al. |
| 8,956,390 | B2 | 2/2015 | Shah et al. |
| 8,958,860 | B2 | 2/2015 | Banerjee et al. |
| 8,960,519 | B2 | 2/2015 | Whitman et al. |
| 8,960,520 | B2 | 2/2015 | McCuen |
| 8,960,521 | B2 | 2/2015 | Kostrzewski |
| 8,961,504 | B2 | 2/2015 | Hoarau et al. |
| 8,963,714 | B2 | 2/2015 | Medhal et al. |
| D725,674 | S | 3/2015 | Jung et al. |
| 8,967,443 | B2 | 3/2015 | McCuen |
| 8,967,444 | B2 | 3/2015 | Beetel |
| 8,967,446 | B2 | 3/2015 | Beardsley et al. |
| 8,967,448 | B2 | 3/2015 | Carter et al. |
| 8,968,276 | B2 | 3/2015 | Zemlok et al. |
| 8,968,312 | B2 | 3/2015 | Marczyk et al. |
| 8,968,337 | B2 | 3/2015 | Whitfield et al. |
| 8,968,340 | B2 | 3/2015 | Chowaniec et al. |
| 8,968,355 | B2 | 3/2015 | Malkowski et al. |
| 8,968,358 | B2 | 3/2015 | Reschke |
| 8,970,507 | B2 | 3/2015 | Holbein et al. |
| 8,973,803 | B2 | 3/2015 | Hall et al. |
| 8,973,804 | B2 | 3/2015 | Hess et al. |
| 8,973,805 | B2 | 3/2015 | Scirica et al. |
| 8,974,440 | B2 | 3/2015 | Farritor et al. |
| 8,974,932 | B2 | 3/2015 | McGahan et al. |
| 8,978,954 | B2 | 3/2015 | Shelton, IV et al. |
| 8,978,955 | B2 | 3/2015 | Aronhalt et al. |
| 8,978,956 | B2 | 3/2015 | Schall et al. |
| 8,979,843 | B2 | 3/2015 | Timm et al. |
| 8,979,890 | B2 | 3/2015 | Boudreaux |
| 8,982,195 | B2 | 3/2015 | Claus et al. |
| 8,991,676 | B2 | 3/2015 | Hess et al. |
| 8,991,677 | B2 | 3/2015 | Moore et al. |
| 8,991,678 | B2 | 3/2015 | Wellman et al. |
| 8,992,042 | B2 | 3/2015 | Eichenholz |
| 8,992,422 | B2 | 3/2015 | Spivey et al. |
| 8,992,565 | B2 | 3/2015 | Brisson et al. |
| 8,996,165 | B2 | 3/2015 | Wang et al. |
| 8,998,058 | B2 | 4/2015 | Moore et al. |
| 8,998,059 | B2 | 4/2015 | Smith et al. |
| 8,998,060 | B2 | 4/2015 | Bruewer et al. |
| 8,998,061 | B2 | 4/2015 | Williams et al. |
| 8,998,939 | B2 | 4/2015 | Price et al. |
| 9,002,518 | B2 | 4/2015 | Manzo et al. |
| 9,004,339 | B1 | 4/2015 | Park |
| 9,005,230 | B2 | 4/2015 | Yates et al. |
| 9,005,238 | B2 | 4/2015 | DeSantis et al. |
| 9,005,243 | B2 | 4/2015 | Stopek et al. |
| 9,010,606 | B2 | 4/2015 | Aranyi et al. |
| 9,010,608 | B2 | 4/2015 | Casasanta, Jr. et al. |
| 9,011,439 | B2 | 4/2015 | Shalaby et al. |
| 9,011,471 | B2 | 4/2015 | Timm et al. |
| 9,016,539 | B2 | 4/2015 | Kostrzewski et al. |
| 9,016,540 | B2 | 4/2015 | Whitman et al. |
| 9,016,541 | B2 | 4/2015 | Viola et al. |
| 9,016,542 | B2 | 4/2015 | Shelton, IV et al. |
| 9,016,545 | B2 | 4/2015 | Aranyi et al. |
| 9,017,331 | B2 | 4/2015 | Fox |
| 9,017,355 | B2 | 4/2015 | Smith et al. |
| 9,017,369 | B2 | 4/2015 | Renger et al. |
| 9,017,371 | B2 | 4/2015 | Whitman et al. |
| 9,021,684 | B2 | 5/2015 | Lenker et al. |
| 9,023,014 | B2 | 5/2015 | Chowaniec et al. |
| 9,023,071 | B2 | 5/2015 | Miller et al. |
| 9,027,817 | B2 | 5/2015 | Milliman et al. |
| 9,028,494 | B2 | 5/2015 | Shelton, IV et al. |
| 9,028,495 | B2 | 5/2015 | Mueller et al. |
| 9,028,519 | B2 | 5/2015 | Yates et al. |
| 9,030,169 | B2 | 5/2015 | Christensen et al. |
| 9,033,203 | B2 | 5/2015 | Woodard, Jr. et al. |
| 9,033,204 | B2 | 5/2015 | Shelton, IV et al. |
| 9,034,505 | B2 | 5/2015 | Detry et al. |
| 9,038,881 | B1 | 5/2015 | Schaller et al. |
| 9,039,690 | B2 | 5/2015 | Kersten et al. |
| 9,039,694 | B2 | 5/2015 | Ross et al. |
| 9,039,720 | B2 | 5/2015 | Madan |
| 9,043,027 | B2 | 5/2015 | Durant et al. |
| 9,044,227 | B2 | 6/2015 | Shelton, IV et al. |
| 9,044,228 | B2 | 6/2015 | Woodard, Jr. et al. |
| 9,044,229 | B2 | 6/2015 | Scheib et al. |
| 9,044,230 | B2 | 6/2015 | Morgan et al. |
| 9,050,083 | B2 | 6/2015 | Yates et al. |
| 9,050,084 | B2 | 6/2015 | Schmid et al. |
| 9,050,100 | B2 | 6/2015 | Yates et al. |
| 9,050,120 | B2 | 6/2015 | Swarup et al. |
| 9,050,123 | B2 | 6/2015 | Krause et al. |
| 9,050,176 | B2 | 6/2015 | Datta et al. |
| 9,055,941 | B2 | 6/2015 | Schmid et al. |
| 9,055,942 | B2 | 6/2015 | Balbierz et al. |
| 9,055,943 | B2 | 6/2015 | Zemlok et al. |
| 9,055,944 | B2 | 6/2015 | Hodgkinson et al. |
| 9,055,961 | B2 | 6/2015 | Manzo et al. |
| 9,060,770 | B2 | 6/2015 | Shelton, IV et al. |
| 9,060,776 | B2 | 6/2015 | Yates et al. |
| 9,060,794 | B2 | 6/2015 | Kang et al. |
| 9,060,894 | B2 | 6/2015 | Wubbeling |
| 9,061,392 | B2 | 6/2015 | Forgues et al. |
| 9,072,515 | B2 | 7/2015 | Hall et al. |
| 9,072,523 | B2 | 7/2015 | Houser et al. |
| 9,072,535 | B2 | 7/2015 | Shelton, IV et al. |
| 9,072,536 | B2 | 7/2015 | Shelton, IV et al. |
| 9,078,653 | B2 | 7/2015 | Leimbach et al. |
| 9,084,601 | B2 | 7/2015 | Moore et al. |
| 9,084,602 | B2 | 7/2015 | Gleiman |
| 9,086,875 | B2 | 7/2015 | Harrat et al. |
| 9,089,326 | B2 | 7/2015 | Krumanaker et al. |
| 9,089,330 | B2 | 7/2015 | Widenhouse et al. |
| 9,089,352 | B2 | 7/2015 | Jeong |
| 9,091,588 | B2 | 7/2015 | Lefler |
| D736,792 | S | 8/2015 | Brinda et al. |
| 9,095,339 | B2 | 8/2015 | Moore et al. |
| 9,095,346 | B2 | 8/2015 | Houser et al. |
| 9,095,362 | B2 | 8/2015 | Dachs, II et al. |
| 9,096,033 | B2 | 8/2015 | Holop et al. |
| 9,099,863 | B2 | 8/2015 | Smith et al. |
| 9,101,358 | B2 | 8/2015 | Kerr et al. |
| 9,101,385 | B2 | 8/2015 | Shelton, IV et al. |
| 9,101,475 | B2 | 8/2015 | Wei et al. |
| 9,107,663 | B2 | 8/2015 | Swensgard |
| 9,107,690 | B2 | 8/2015 | Bales, Jr. et al. |
| 9,110,587 | B2 | 8/2015 | Kim et al. |
| 9,113,862 | B2 | 8/2015 | Morgan et al. |
| 9,113,864 | B2 | 8/2015 | Morgan et al. |
| 9,113,865 | B2 | 8/2015 | Shelton, IV et al. |
| 9,113,873 | B2 | 8/2015 | Marczyk et al. |
| 9,113,874 | B2 | 8/2015 | Shelton, IV et al. |
| 9,113,876 | B2 | 8/2015 | Zemlok et al. |
| 9,113,880 | B2 | 8/2015 | Zemlok et al. |
| 9,113,881 | B2 | 8/2015 | Scirica |
| 9,113,883 | B2 | 8/2015 | Aronhalt et al. |
| 9,113,884 | B2 | 8/2015 | Shelton, IV et al. |
| 9,113,887 | B2 | 8/2015 | Behnke, II et al. |
| 9,119,657 | B2 | 9/2015 | Shelton, IV et al. |
| 9,119,898 | B2 | 9/2015 | Bayon et al. |
| 9,119,957 | B2 | 9/2015 | Gantz et al. |
| 9,123,286 | B2 | 9/2015 | Park |
| 9,124,097 | B2 | 9/2015 | Cruz |
| 9,125,654 | B2 | 9/2015 | Aronhalt et al. |
| 9,125,662 | B2 | 9/2015 | Shelton, IV |
| 9,126,317 | B2 | 9/2015 | Lawton et al. |
| 9,131,835 | B2 | 9/2015 | Widenhouse et al. |
| 9,131,940 | B2 | 9/2015 | Huitema et al. |
| 9,131,950 | B2 | 9/2015 | Matthew |
| 9,131,957 | B2 | 9/2015 | Skarbnik et al. |
| 9,138,225 | B2 | 9/2015 | Huang et al. |
| 9,138,226 | B2 | 9/2015 | Racenet et al. |
| 9,144,455 | B2 | 9/2015 | Kennedy et al. |
| 9,149,274 | B2 | 10/2015 | Spivey et al. |
| 9,149,324 | B2 | 10/2015 | Huang et al. |

(56) **References Cited**

U.S. PATENT DOCUMENTS

9,149,325 B2 10/2015 Worrell et al.
9,153,994 B2 10/2015 Wood et al.
9,161,753 B2 10/2015 Prior
9,161,803 B2 10/2015 Yates et al.
9,168,038 B2 10/2015 Shelton, IV et al.
9,168,039 B1 10/2015 Knodel
9,168,054 B2 10/2015 Turner et al.
9,168,144 B2 10/2015 Rivin et al.
9,179,911 B2 11/2015 Morgan et al.
9,179,912 B2 11/2015 Yates et al.
9,182,244 B2 11/2015 Luke et al.
9,186,046 B2 11/2015 Ramamurthy et al.
9,186,137 B2 11/2015 Farascioni et al.
9,186,140 B2 11/2015 Hiles et al.
9,186,142 B2 11/2015 Fanelli et al.
9,186,143 B2 11/2015 Timm et al.
9,186,148 B2 11/2015 Felder et al.
9,186,221 B2 11/2015 Burbank
9,192,380 B2 11/2015 (Tarinelli) Racenet et al.
9,192,384 B2 11/2015 Bettuchi
9,192,430 B2 11/2015 Rachlin et al.
9,192,434 B2 11/2015 Twomey et al.
9,193,045 B2 11/2015 Saur et al.
9,198,642 B2 12/2015 Storz
9,198,644 B2 12/2015 Balek et al.
9,198,661 B2 12/2015 Swensgard
9,198,662 B2 12/2015 Barton et al.
9,198,683 B2 12/2015 Friedman et al.
9,204,830 B2 12/2015 Zand et al.
9,204,877 B2 12/2015 Whitman et al.
9,204,878 B2 12/2015 Hall et al.
9,204,879 B2 12/2015 Shelton, IV
9,204,880 B2 12/2015 Baxter, III et al.
9,204,923 B2 12/2015 Manzo et al.
9,204,924 B2 12/2015 Marczyk et al.
9,211,120 B2 12/2015 Scheib et al.
9,211,121 B2 12/2015 Hall et al.
9,211,122 B2 12/2015 Hagerty et al.
9,216,013 B2 12/2015 Scirica et al.
9,216,019 B2 12/2015 Schmid et al.
9,216,020 B2 12/2015 Zhang et al.
9,216,030 B2 12/2015 Fan et al.
9,216,062 B2 12/2015 Duque et al.
9,220,500 B2 12/2015 Swayze et al.
9,220,501 B2 12/2015 Baxter, III et al.
9,220,502 B2 12/2015 Zemlok et al.
9,220,508 B2 12/2015 Dannaher
9,220,559 B2 12/2015 Worrell et al.
9,220,570 B2 12/2015 Kim et al.
D746,854 S 1/2016 Shardlow et al.
9,226,750 B2 1/2016 Weir et al.
9,226,751 B2 1/2016 Shelton, IV et al.
9,226,767 B2 1/2016 Stulen et al.
9,232,941 B2 1/2016 Mandakolathur Vasudevan et al.
9,232,945 B2 1/2016 Zingman
9,232,979 B2 1/2016 Parihar et al.
9,233,610 B2 1/2016 Kim et al.
9,237,891 B2 1/2016 Shelton, IV
9,237,892 B2 1/2016 Hodgkinson
9,237,895 B2 1/2016 McCarthy et al.
9,237,921 B2 1/2016 Messerly et al.
9,240,740 B2 1/2016 Zeng et al.
9,241,712 B2 1/2016 Zemlok et al.
9,241,714 B2 1/2016 Timm et al.
9,241,716 B2 1/2016 Whitman
9,241,731 B2 1/2016 Boudreaux et al.
D750,122 S 2/2016 Shardlow et al.
9,259,274 B2 2/2016 Prisco
9,261,172 B2 2/2016 Solomon et al.
9,265,500 B2 2/2016 Sorrentino et al.
9,265,516 B2 2/2016 Casey et al.
9,265,585 B2 2/2016 Wingardner et al.
9,271,718 B2 3/2016 Milad et al.
9,271,727 B2 3/2016 McGuckin, Jr. et al.
9,271,753 B2 3/2016 Butler et al.
9,271,799 B2 3/2016 Shelton, IV et al.
9,272,406 B2 3/2016 Aronhalt et al.
9,277,919 B2 3/2016 Timmer et al.
9,277,922 B2 3/2016 Carter et al.
9,282,962 B2 3/2016 Schmid et al.
9,282,963 B2 3/2016 Bryant
9,282,966 B2 3/2016 Shelton, IV et al.
9,282,974 B2 3/2016 Shelton, IV
9,283,028 B2 3/2016 Johnson
9,283,045 B2 3/2016 Rhee et al.
9,283,054 B2 3/2016 Morgan et al.
9,289,206 B2 3/2016 Hess et al.
9,289,207 B2 3/2016 Shelton, IV
9,289,210 B2 3/2016 Baxter, III et al.
9,289,211 B2 3/2016 Williams et al.
9,289,212 B2 3/2016 Shelton, IV et al.
9,289,225 B2 3/2016 Shelton, IV et al.
9,289,256 B2 3/2016 Shelton, IV et al.
9,293,757 B2 3/2016 Toussaint et al.
9,295,464 B2 3/2016 Shelton, IV et al.
9,295,465 B2 3/2016 Farascioni
9,295,466 B2 3/2016 Hodgkinson et al.
9,295,468 B2 3/2016 Heinrich et al.
9,295,514 B2 3/2016 Shelton, IV et al.
9,295,522 B2 3/2016 Kostrzewski
9,295,784 B2 3/2016 Eggert et al.
9,301,691 B2 4/2016 Hufnagel et al.
9,301,752 B2 4/2016 Mandakolathur Vasudevan et al.
9,301,753 B2 4/2016 Aldridge et al.
9,301,755 B2 4/2016 Shelton, IV et al.
9,301,759 B2 4/2016 Spivey et al.
9,307,965 B2 4/2016 Ming et al.
9,307,986 B2 4/2016 Hall et al.
9,307,987 B2 4/2016 Swensgard et al.
9,307,988 B2 4/2016 Shelton, IV
9,307,989 B2 4/2016 Shelton, IV et al.
9,307,994 B2 4/2016 Gresham et al.
9,308,009 B2 4/2016 Madan et al.
9,308,011 B2 4/2016 Chao et al.
9,308,646 B2 4/2016 Lim et al.
9,314,246 B2 4/2016 Shelton, IV et al.
9,314,247 B2 4/2016 Shelton, IV et al.
9,314,261 B2 4/2016 Bales, Jr. et al.
9,314,908 B2 4/2016 Tanimoto et al.
9,320,518 B2 4/2016 Henderson et al.
9,320,520 B2 4/2016 Shelton, IV et al.
9,320,521 B2 4/2016 Shelton, IV et al.
9,320,523 B2 4/2016 Shelton, IV et al.
9,326,767 B2 5/2016 Koch, Jr. et al.
9,326,768 B2 5/2016 Shelton, IV
9,326,769 B2 5/2016 Shelton, IV et al.
9,326,770 B2 5/2016 Shelton, IV et al.
9,326,771 B2 5/2016 Baxter, III et al.
9,326,788 B2 5/2016 Batross et al.
9,326,812 B2 5/2016 Waaler et al.
9,332,890 B2 5/2016 Ozawa
9,332,974 B2 5/2016 Henderson et al.
9,332,984 B2 5/2016 Weaner et al.
9,332,987 B2 5/2016 Leimbach et al.
9,333,040 B2 5/2016 Shellenberger et al.
9,333,082 B2 5/2016 Wei et al.
9,339,226 B2 5/2016 van der Walt et al.
9,345,477 B2 5/2016 Anim et al.
9,345,480 B2 5/2016 Hessler et al.
9,345,481 B2 5/2016 Hall et al.
9,351,726 B2 5/2016 Leimbach et al.
9,351,727 B2 5/2016 Leimbach et al.
9,351,728 B2 5/2016 Sniffin et al.
9,351,730 B2 5/2016 Schmid et al.
9,351,731 B2 5/2016 Carter et al.
9,351,732 B2 5/2016 Hodgkinson
D758,433 S 6/2016 Lee et al.
9,358,003 B2 6/2016 Hall et al.
9,358,005 B2 6/2016 Shelton, IV et al.
9,358,015 B2 6/2016 Sorrentino et al.
9,358,031 B2 6/2016 Manzo
9,364,217 B2 6/2016 Kostrzewski et al.
9,364,219 B2 6/2016 Olson et al.
9,364,220 B2 6/2016 Williams

(56) **References Cited**

U.S. PATENT DOCUMENTS

9,364,226 B2 6/2016 Zemlok et al.
9,364,229 B2 6/2016 D'Agostino et al.
9,364,230 B2 6/2016 Shelton, IV et al.
9,364,231 B2 6/2016 Wenchell
9,364,233 B2 6/2016 Alexander, III et al.
9,364,279 B2 6/2016 Houser et al.
9,368,991 B2 6/2016 Qahouq
9,370,341 B2 6/2016 Ceniccola et al.
9,370,358 B2 6/2016 Shelton, IV et al.
9,370,364 B2 6/2016 Smith et al.
9,375,206 B2 6/2016 Vidal et al.
9,375,255 B2 6/2016 Houser et al.
9,381,058 B2 7/2016 Houser et al.
9,386,983 B2 7/2016 Swensgard et al.
9,386,984 B2 7/2016 Aronhalt et al.
9,386,985 B2 7/2016 Koch, Jr. et al.
9,386,988 B2 7/2016 Baxter, III et al.
9,387,003 B2 7/2016 Kaercher et al.
9,393,015 B2 7/2016 Laurent et al.
9,393,017 B2 7/2016 Flanagan et al.
9,393,018 B2 7/2016 Wang et al.
9,398,911 B2 7/2016 Auld
9,402,604 B2 8/2016 Williams et al.
9,402,626 B2 8/2016 Ortiz et al.
9,402,627 B2 8/2016 Stevenson et al.
9,408,604 B2 8/2016 Shelton, IV et al.
9,408,606 B2 8/2016 Shelton, IV
9,408,622 B2 8/2016 Stulen et al.
9,411,370 B2 8/2016 Benni et al.
9,414,838 B2 8/2016 Shelton, IV et al.
9,414,849 B2 8/2016 Nagashimada
9,414,880 B2 8/2016 Monson et al.
9,420,967 B2 8/2016 Zand et al.
9,421,003 B2 8/2016 Williams et al.
9,421,014 B2 8/2016 Ingmanson et al.
9,421,030 B2 8/2016 Cole et al.
9,421,060 B2 8/2016 Monson et al.
9,427,223 B2 8/2016 Park et al.
9,427,231 B2 8/2016 Racenet et al.
9,433,411 B2 9/2016 Racenet et al.
9,433,419 B2 9/2016 Gonzalez et al.
9,433,420 B2 9/2016 Hodgkinson
9,439,649 B2 9/2016 Shelton, IV et al.
9,439,650 B2 9/2016 McGuckin, Jr. et al.
9,439,651 B2 9/2016 Smith et al.
9,439,668 B2 9/2016 Timm et al.
9,445,808 B2 9/2016 Woodard, Jr. et al.
9,445,813 B2 9/2016 Shelton, IV et al.
9,451,958 B2 9/2016 Shelton, IV et al.
9,461,340 B2 10/2016 Li et al.
9,463,040 B2 10/2016 Jeong et al.
9,463,260 B2 10/2016 Stopek
9,468,438 B2 10/2016 Baber et al.
9,468,447 B2 10/2016 Aman et al.
9,470,297 B2 10/2016 Aranyi et al.
9,471,969 B2 10/2016 Zeng et al.
9,474,506 B2 10/2016 Magnin et al.
9,474,523 B2 10/2016 Meade et al.
9,474,540 B2 10/2016 Stokes et al.
9,475,180 B2 10/2016 Eshleman et al.
9,480,476 B2 11/2016 Aldridge et al.
9,480,492 B2 11/2016 Aranyi et al.
9,483,095 B2 11/2016 Tran et al.
9,486,186 B2 11/2016 Fiebig et al.
9,486,213 B2 11/2016 Altman et al.
9,486,214 B2 11/2016 Shelton, IV
9,486,302 B2 11/2016 Boey et al.
9,488,197 B2 11/2016 Wi
9,492,146 B2 11/2016 Kostrzewski et al.
9,492,167 B2 11/2016 Shelton, IV et al.
9,492,170 B2 11/2016 Bear et al.
9,492,189 B2 11/2016 Williams et al.
9,492,192 B2 11/2016 To et al.
9,498,213 B2 11/2016 Marczyk et al.
9,498,219 B2 11/2016 Moore et al.
9,504,521 B2 11/2016 Deutmeyer et al.
D775,336 S 12/2016 Shelton, IV et al.
9,510,828 B2 12/2016 Yates et al.
9,510,830 B2 12/2016 Shelton, IV et al.
9,510,846 B2 12/2016 Sholev et al.
9,510,895 B2 12/2016 Houser et al.
9,510,925 B2 12/2016 Hotter et al.
9,517,063 B2 12/2016 Swayze et al.
9,517,068 B2 12/2016 Shelton, IV et al.
9,521,996 B2 12/2016 Armstrong
9,522,029 B2 12/2016 Yates et al.
9,526,481 B2 12/2016 Storz et al.
9,526,499 B2 12/2016 Kostrzewski et al.
9,526,564 B2 12/2016 Rusin
D777,773 S 1/2017 Shi
9,532,783 B2 1/2017 Swayze et al.
9,545,258 B2 1/2017 Smith et al.
9,549,732 B2 1/2017 Yates et al.
9,549,735 B2 1/2017 Shelton, IV et al.
9,554,794 B2 1/2017 Baber et al.
9,554,796 B2 1/2017 Kostrzewski
9,554,812 B2 1/2017 Inkpen et al.
9,559,624 B2 1/2017 Philipp
9,561,031 B2 2/2017 Heinrich et al.
9,561,032 B2 2/2017 Shelton, IV et al.
9,561,038 B2 2/2017 Shelton, IV et al.
9,561,045 B2 2/2017 Hinman et al.
9,566,061 B2 2/2017 Aronhalt et al.
9,566,067 B2 2/2017 Milliman et al.
9,572,574 B2 2/2017 Shelton, IV et al.
9,572,577 B2 2/2017 Lloyd et al.
9,572,592 B2 2/2017 Price et al.
9,574,644 B2 2/2017 Parihar
D781,879 S 3/2017 Butcher et al.
9,585,550 B2 3/2017 Abel et al.
9,585,657 B2 3/2017 Shelton, IV et al.
9,585,658 B2 3/2017 Shelton, IV
9,585,659 B2 3/2017 Viola et al.
9,585,660 B2 3/2017 Laurent et al.
9,585,662 B2 3/2017 Shelton, IV et al.
9,585,663 B2 3/2017 Shelton, IV et al.
9,585,672 B2 3/2017 Bastia
9,592,050 B2 3/2017 Schmid et al.
9,592,052 B2 3/2017 Shelton, IV
9,592,053 B2 3/2017 Shelton, IV et al.
9,592,054 B2 3/2017 Schmid et al.
9,597,073 B2 3/2017 Sorrentino et al.
9,597,075 B2 3/2017 Shelton, IV et al.
9,597,080 B2 3/2017 Milliman et al.
9,597,104 B2 3/2017 Nicholas et al.
9,597,143 B2 3/2017 Madan et al.
9,603,595 B2 3/2017 Shelton, IV et al.
9,603,598 B2 3/2017 Shelton, IV et al.
9,603,991 B2 3/2017 Shelton, IV et al.
9,610,080 B2 4/2017 Whitfield et al.
9,614,258 B2 4/2017 Takahashi et al.
9,615,826 B2 4/2017 Shelton, IV et al.
9,629,623 B2 4/2017 Lytle, IV et al.
9,629,626 B2 4/2017 Soltz et al.
9,629,629 B2 4/2017 Leimbach et al.
9,629,652 B2 4/2017 Mumaw et al.
9,629,814 B2 4/2017 Widenhouse et al.
D788,140 S 5/2017 Hemsley et al.
9,636,850 B2 5/2017 Stopek (nee Prommersberger) et al.
9,641,122 B2 5/2017 Romanowich et al.
9,642,620 B2 5/2017 Baxter, III et al.
9,649,096 B2 5/2017 Sholev
9,649,110 B2 5/2017 Parihar et al.
9,649,111 B2 5/2017 Shelton, IV et al.
9,655,613 B2 5/2017 Schaller
9,655,614 B2 5/2017 Swensgard et al.
9,655,615 B2 5/2017 Knodel et al.
9,655,624 B2 5/2017 Shelton, IV et al.
9,662,108 B2 5/2017 Williams
9,662,110 B2 5/2017 Huang et al.
9,662,116 B2 5/2017 Smith et al.
9,662,131 B2 5/2017 Omori et al.
D790,570 S 6/2017 Butcher et al.

(56) **References Cited**

U.S. PATENT DOCUMENTS

9,668,729 B2 6/2017 Williams et al.
9,668,732 B2 6/2017 Patel et al.
9,675,344 B2 6/2017 Combrowski et al.
9,675,351 B2 6/2017 Hodgkinson et al.
9,675,355 B2 6/2017 Shelton, IV et al.
9,675,372 B2 6/2017 Laurent et al.
9,675,375 B2 6/2017 Houser et al.
9,675,405 B2 6/2017 Trees et al.
9,681,870 B2 6/2017 Baxter, III et al.
9,681,873 B2 6/2017 Smith et al.
9,681,884 B2 6/2017 Clem et al.
9,687,230 B2 6/2017 Leimbach et al.
9,687,231 B2 6/2017 Baxter, III et al.
9,687,232 B2 6/2017 Shelton, IV et al.
9,687,233 B2 6/2017 Fernandez et al.
9,687,236 B2 6/2017 Leimbach et al.
9,687,237 B2 6/2017 Schmid et al.
9,687,253 B2 6/2017 Detry et al.
9,689,466 B2 6/2017 Kanai et al.
9,690,362 B2 6/2017 Leimbach et al.
9,693,772 B2 7/2017 Ingmanson et al.
9,693,774 B2 7/2017 Gettinger et al.
9,693,777 B2 7/2017 Schellin et al.
9,700,309 B2 7/2017 Jaworek et al.
9,700,310 B2 7/2017 Morgan et al.
9,700,312 B2 7/2017 Kostrzewski et al.
9,700,317 B2 7/2017 Aronhalt et al.
9,700,318 B2 7/2017 Scirica et al.
9,700,319 B2 7/2017 Motooka et al.
9,700,321 B2 7/2017 Shelton, IV et al.
9,706,981 B2 7/2017 Nicholas et al.
9,706,991 B2 7/2017 Hess et al.
9,706,993 B2 7/2017 Hessler et al.
9,707,026 B2 7/2017 Malackowski et al.
9,707,043 B2 7/2017 Bozung
9,707,684 B2 7/2017 Ruiz Morales et al.
9,713,468 B2 7/2017 Harris et al.
9,713,470 B2 7/2017 Scirica et al.
9,724,091 B2 8/2017 Shelton, IV et al.
9,724,092 B2 8/2017 Baxter, III et al.
9,724,094 B2 8/2017 Baber et al.
9,724,096 B2 8/2017 Thompson et al.
9,724,098 B2 8/2017 Baxter, III et al.
9,724,163 B2 8/2017 Orban
9,730,692 B2 8/2017 Shelton, IV et al.
9,730,695 B2 8/2017 Leimbach et al.
9,730,697 B2 8/2017 Morgan et al.
9,730,717 B2 8/2017 Katsuki et al.
9,731,410 B2 8/2017 Hirabayashi et al.
9,733,663 B2 8/2017 Leimbach et al.
9,737,297 B2 8/2017 Racenet et al.
9,737,301 B2 8/2017 Baber et al.
9,737,302 B2 8/2017 Shelton, IV et al.
9,737,303 B2 8/2017 Shelton, IV et al.
9,737,365 B2 8/2017 Hegeman et al.
9,743,927 B2 8/2017 Whitman
9,743,928 B2 8/2017 Shelton, IV et al.
9,743,929 B2 8/2017 Leimbach et al.
9,750,498 B2 9/2017 Timm et al.
9,750,499 B2 9/2017 Leimbach et al.
9,750,501 B2 9/2017 Shelton, IV et al.
9,750,639 B2 9/2017 Barnes et al.
9,757,123 B2 9/2017 Giordano et al.
9,757,124 B2 9/2017 Schellin et al.
9,757,126 B2 9/2017 Cappola
9,757,128 B2 9/2017 Baber et al.
9,757,129 B2 9/2017 Williams
9,757,130 B2 9/2017 Shelton, IV
9,763,662 B2 9/2017 Shelton, IV et al.
9,770,245 B2 9/2017 Swayze et al.
D800,904 S 10/2017 Leimbach et al.
9,775,608 B2 10/2017 Aronhalt et al.
9,775,609 B2 10/2017 Shelton, IV et al.
9,775,610 B2 10/2017 Nicholas et al.
9,775,611 B2 10/2017 Kostrzewski
9,775,613 B2 10/2017 Shelton, IV et al.
9,775,614 B2 10/2017 Shelton, IV et al.
9,782,169 B2 10/2017 Kimsey et al.
9,782,170 B2 10/2017 Zemlok et al.
9,782,180 B2 10/2017 Smith et al.
9,782,214 B2 10/2017 Houser et al.
9,788,834 B2 10/2017 Schmid et al.
9,788,835 B2 10/2017 Morgan et al.
9,788,836 B2 10/2017 Overmyer et al.
9,788,847 B2 10/2017 Jinno
9,788,851 B2 10/2017 Dannaher et al.
9,795,379 B2 10/2017 Leimbach et al.
9,795,381 B2 10/2017 Shelton, IV
9,795,382 B2 10/2017 Shelton, IV
9,795,383 B2 10/2017 Aldridge et al.
9,795,384 B2 10/2017 Weaner et al.
9,797,486 B2 10/2017 Zergiebel et al.
9,801,626 B2 10/2017 Parihar et al.
9,801,627 B2 10/2017 Harris et al.
9,801,628 B2 10/2017 Harris et al.
9,801,634 B2 10/2017 Shelton, IV et al.
9,802,033 B2 10/2017 Hibner et al.
9,804,618 B2 10/2017 Leimbach et al.
D803,850 S 11/2017 Chang et al.
9,808,244 B2 11/2017 Leimbach et al.
9,808,246 B2 11/2017 Shelton, IV et al.
9,808,247 B2 11/2017 Shelton, IV et al.
9,808,249 B2 11/2017 Shelton, IV
9,814,460 B2 11/2017 Kimsey et al.
9,814,462 B2 11/2017 Woodard, Jr. et al.
9,820,738 B2 11/2017 Lytle, IV et al.
9,820,741 B2 11/2017 Kostrzewski
9,820,768 B2 11/2017 Gee et al.
9,825,455 B2 11/2017 Sandhu et al.
9,826,976 B2 11/2017 Parihar et al.
9,826,977 B2 11/2017 Leimbach et al.
9,826,978 B2 11/2017 Shelton, IV et al.
9,829,698 B2 11/2017 Haraguchi et al.
9,833,236 B2 12/2017 Shelton, IV et al.
9,833,238 B2 12/2017 Baxter, III et al.
9,833,239 B2 12/2017 Yates et al.
9,833,241 B2 12/2017 Huitema et al.
9,833,242 B2 12/2017 Baxter, III et al.
9,839,420 B2 12/2017 Shelton, IV et al.
9,839,421 B2 12/2017 Zerkle et al.
9,839,422 B2 12/2017 Schellin et al.
9,839,423 B2 12/2017 Vendely et al.
9,839,427 B2 12/2017 Swayze et al.
9,839,428 B2 12/2017 Baxter, III et al.
9,839,429 B2 12/2017 Weisenburgh, II et al.
9,839,480 B2 12/2017 Pribanic et al.
9,844,368 B2 12/2017 Boudreaux et al.
9,844,369 B2 12/2017 Huitema et al.
9,844,372 B2 12/2017 Shelton, IV et al.
9,844,373 B2 12/2017 Swayze et al.
9,844,374 B2 12/2017 Lytle, IV et al.
9,844,375 B2 12/2017 Overmyer et al.
9,844,376 B2 12/2017 Baxter, III et al.
9,844,379 B2 12/2017 Shelton, IV et al.
9,848,873 B2 12/2017 Shelton, IV
9,848,875 B2 12/2017 Aronhalt et al.
9,848,877 B2 12/2017 Shelton, IV et al.
9,855,662 B2 1/2018 Ruiz Morales et al.
9,861,261 B2 1/2018 Shahinian
9,861,359 B2 1/2018 Shelton, IV et al.
9,861,361 B2 1/2018 Aronhalt et al.
9,861,382 B2 1/2018 Smith et al.
9,867,612 B2 1/2018 Parihar et al.
9,867,618 B2 1/2018 Hall et al.
9,868,198 B2 1/2018 Nicholas et al.
9,872,682 B2 1/2018 Hess et al.
9,872,683 B2 1/2018 Hopkins et al.
9,872,684 B2 1/2018 Hall et al.
9,877,721 B2 1/2018 Schellin et al.
9,877,723 B2 1/2018 Hall et al.
9,883,843 B2 2/2018 Garlow
9,883,860 B2 2/2018 Leimbach et al.
9,883,861 B2 2/2018 Shelton, IV et al.
9,884,456 B2 2/2018 Schellin et al.

(56) **References Cited**

U.S. PATENT DOCUMENTS


| | | | |
|---|---|---|---|
| 9,888,919 | B2 | 2/2018 | Leimbach et al. |
| 9,888,924 | B2 | 2/2018 | Ebersole et al. |
| 9,889,230 | B2 | 2/2018 | Bennett et al. |
| 9,895,147 | B2 | 2/2018 | Shelton, IV |
| 9,895,148 | B2 | 2/2018 | Shelton, IV et al. |
| 9,895,813 | B2 | 2/2018 | Blumenkranz et al. |
| 9,901,341 | B2 | 2/2018 | Kostrzewski |
| 9,901,342 | B2 | 2/2018 | Shelton, IV et al. |
| 9,901,344 | B2 | 2/2018 | Moore et al. |
| 9,901,345 | B2 | 2/2018 | Moore et al. |
| 9,901,346 | B2 | 2/2018 | Moore et al. |
| 9,907,456 | B2 | 3/2018 | Miyoshi |
| 9,907,553 | B2 | 3/2018 | Cole et al. |
| 9,907,620 | B2 | 3/2018 | Shelton, IV et al. |
| 9,913,642 | B2 | 3/2018 | Leimbach et al. |
| 9,913,644 | B2 | 3/2018 | McCuen |
| 9,913,646 | B2 | 3/2018 | Shelton, IV |
| 9,913,647 | B2 | 3/2018 | Weisenburgh, II et al. |
| 9,913,648 | B2 | 3/2018 | Shelton, IV et al. |
| 9,913,694 | B2 | 3/2018 | Brisson |
| 9,918,704 | B2 | 3/2018 | Shelton, IV et al. |
| 9,918,715 | B2 | 3/2018 | Menn |
| 9,918,716 | B2 | 3/2018 | Baxter, III et al. |
| 9,924,942 | B2 | 3/2018 | Swayze et al. |
| 9,924,944 | B2 | 3/2018 | Shelton, IV et al. |
| 9,924,945 | B2 | 3/2018 | Zheng et al. |
| 9,924,946 | B2 | 3/2018 | Vendely et al. |
| 9,924,947 | B2 | 3/2018 | Shelton, IV et al. |
| 9,924,961 | B2 | 3/2018 | Shelton, IV et al. |
| 9,931,116 | B2 | 4/2018 | Racenet et al. |
| 9,931,118 | B2 | 4/2018 | Shelton, IV et al. |
| 9,936,949 | B2 | 4/2018 | Measamer et al. |
| 9,936,950 | B2 | 4/2018 | Shelton, IV et al. |
| 9,936,951 | B2 | 4/2018 | Hufnagel et al. |
| 9,936,954 | B2 | 4/2018 | Shelton, IV et al. |
| 9,943,309 | B2 | 4/2018 | Shelton, IV et al. |
| 9,943,310 | B2 | 4/2018 | Harris et al. |
| 9,943,312 | B2 | 4/2018 | Posada et al. |
| 9,955,965 | B2 | 5/2018 | Chen et al. |
| 9,955,966 | B2 | 5/2018 | Zergiebel |
| 9,962,158 | B2 | 5/2018 | Hall et al. |
| 9,962,159 | B2 | 5/2018 | Heinrich et al. |
| 9,962,161 | B2 | 5/2018 | Scheib et al. |
| 9,968,354 | B2 | 5/2018 | Shelton, IV et al. |
| 9,968,355 | B2 | 5/2018 | Shelton, IV et al. |
| 9,968,356 | B2 | 5/2018 | Shelton, IV et al. |
| 9,968,397 | B2 | 5/2018 | Taylor et al. |
| 9,974,529 | B2 | 5/2018 | Shelton, IV et al. |
| 9,974,538 | B2 | 5/2018 | Baxter, III et al. |
| 9,974,539 | B2 | 5/2018 | Yates et al. |
| 9,980,713 | B2 | 5/2018 | Aronhalt et al. |
| 9,980,729 | B2 | 5/2018 | Moore et al. |
| 9,987,000 | B2 | 6/2018 | Shelton, IV et al. |
| 9,987,003 | B2 | 6/2018 | Timm et al. |
| 9,987,006 | B2 | 6/2018 | Morgan et al. |
| 9,987,099 | B2 | 6/2018 | Chen et al. |
| 9,993,248 | B2 | 6/2018 | Shelton, IV et al. |
| 9,993,258 | B2 | 6/2018 | Shelton, IV et al. |
| 9,999,408 | B2 | 6/2018 | Boudreaux et al. |
| 9,999,426 | B2 | 6/2018 | Moore et al. |
| 9,999,431 | B2 | 6/2018 | Shelton, IV et al. |
| 10,004,497 | B2 | 6/2018 | Overmyer et al. |
| 10,004,498 | B2 | 6/2018 | Morgan et al. |
| 10,004,500 | B2 | 6/2018 | Shelton, IV et al. |
| 10,004,501 | B2 | 6/2018 | Shelton, IV et al. |
| 10,004,505 | B2 | 6/2018 | Moore et al. |
| 10,004,506 | B2 | 6/2018 | Shelton, IV et al. |
| 10,010,322 | B2 | 7/2018 | Shelton, IV et al. |
| 10,010,324 | B2 | 7/2018 | Huitema et al. |
| 10,013,049 | B2 | 7/2018 | Leimbach et al. |
| 10,016,199 | B2 | 7/2018 | Baber et al. |
| 10,022,125 | B2 | 7/2018 | (Prommersberger) Stopek et al. |
| 10,024,407 | B2 | 7/2018 | Aranyi et al. |
| 10,028,742 | B2 | 7/2018 | Shelton, IV et al. |
| 10,028,743 | B2 | 7/2018 | Shelton, IV et al. |
| 10,028,744 | B2 | 7/2018 | Shelton, IV et al. |
| 10,028,761 | B2 | 7/2018 | Leimbach et al. |
| 10,029,125 | B2 | 7/2018 | Shapiro et al. |
| 10,034,668 | B2 | 7/2018 | Ebner |
| 10,039,440 | B2 | 8/2018 | Fenech et al. |
| 10,039,529 | B2 | 8/2018 | Kerr et al. |
| 10,039,545 | B2 | 8/2018 | Sadowski et al. |
| 10,041,822 | B2 | 8/2018 | Zemlok |
| 10,045,769 | B2 | 8/2018 | Aronhalt et al. |
| 10,045,776 | B2 | 8/2018 | Shelton, IV et al. |
| 10,045,778 | B2 | 8/2018 | Yates et al. |
| 10,045,779 | B2 | 8/2018 | Savage et al. |
| 10,045,781 | B2 | 8/2018 | Cropper et al. |
| 10,052,044 | B2 | 8/2018 | Shelton, IV et al. |
| 10,052,099 | B2 | 8/2018 | Morgan et al. |
| 10,052,100 | B2 | 8/2018 | Morgan et al. |
| 10,052,102 | B2 | 8/2018 | Baxter, III et al. |
| 10,052,104 | B2 | 8/2018 | Shelton, IV et al. |
| 10,052,164 | B2 | 8/2018 | Overmyer |
| 10,058,317 | B2 | 8/2018 | Fan et al. |
| 10,058,327 | B2 | 8/2018 | Weisenburgh, II et al. |
| 10,058,963 | B2 | 8/2018 | Shelton, IV et al. |
| 10,064,620 | B2 | 9/2018 | Gettinger et al. |
| 10,064,621 | B2 | 9/2018 | Kerr et al. |
| 10,064,624 | B2 | 9/2018 | Shelton, IV et al. |
| 10,064,639 | B2 | 9/2018 | Ishida et al. |
| 10,064,649 | B2 | 9/2018 | Golebieski et al. |
| 10,064,688 | B2 | 9/2018 | Shelton, IV et al. |
| 10,070,861 | B2 | 9/2018 | Spivey et al. |
| 10,070,863 | B2 | 9/2018 | Swayze et al. |
| 10,071,452 | B2 | 9/2018 | Shelton, IV et al. |
| 10,076,325 | B2 | 9/2018 | Huang et al. |
| 10,076,326 | B2 | 9/2018 | Yates et al. |
| D831,209 | S | 10/2018 | Huitema et al. |
| 10,085,624 | B2 | 10/2018 | Isoda et al. |
| 10,085,748 | B2 | 10/2018 | Morgan et al. |
| 10,085,751 | B2 | 10/2018 | Overmyer et al. |
| 10,085,806 | B2 | 10/2018 | Hagn et al. |
| 10,092,292 | B2 | 10/2018 | Boudreaux et al. |
| 10,098,636 | B2 | 10/2018 | Shelton, IV et al. |
| 10,098,642 | B2 | 10/2018 | Baxter, III et al. |
| 10,099,303 | B2 | 10/2018 | Yoshida et al. |
| 10,105,128 | B2 | 10/2018 | Cooper et al. |
| 10,105,136 | B2 | 10/2018 | Yates et al. |
| 10,105,139 | B2 | 10/2018 | Yates et al. |
| 10,105,140 | B2 | 10/2018 | Malinouskas et al. |
| 10,111,679 | B2 | 10/2018 | Baber et al. |
| 10,117,649 | B2 | 11/2018 | Baxter, III et al. |
| 10,117,652 | B2 | 11/2018 | Schmid et al. |
| 10,117,653 | B2 | 11/2018 | Leimbach et al. |
| 10,117,654 | B2 | 11/2018 | Ingmanson et al. |
| 2001/0000531 | A1 | 4/2001 | Casscells et al. |
| 2001/0025183 | A1 | 9/2001 | Shahidi |
| 2002/0014510 | A1 | 2/2002 | Richter et al. |
| 2002/0022810 | A1 | 2/2002 | Urich |
| 2002/0022836 | A1 | 2/2002 | Goble et al. |
| 2002/0022861 | A1 | 2/2002 | Jacobs et al. |
| 2002/0029032 | A1 | 3/2002 | Arkin |
| 2002/0029036 | A1 | 3/2002 | Goble et al. |
| 2002/0042620 | A1 | 4/2002 | Julian et al. |
| 2002/0091374 | A1 | 7/2002 | Cooper |
| 2002/0095175 | A1 | 7/2002 | Brock et al. |
| 2002/0103494 | A1 | 8/2002 | Pacey |
| 2002/0117534 | A1 | 8/2002 | Green et al. |
| 2002/0127265 | A1 | 9/2002 | Bowman et al. |
| 2002/0128633 | A1 | 9/2002 | Brock et al. |
| 2002/0134811 | A1 | 9/2002 | Napier et al. |
| 2002/0135474 | A1 | 9/2002 | Sylliassen |
| 2002/0143340 | A1 | 10/2002 | Kaneko |
| 2002/0158593 | A1 | 10/2002 | Henderson et al. |
| 2002/0185514 | A1 | 12/2002 | Adams et al. |
| 2002/0188170 | A1 | 12/2002 | Santamore et al. |
| 2002/0188287 | A1 | 12/2002 | Zvuloni et al. |
| 2003/0009193 | A1 | 1/2003 | Corsaro |
| 2003/0011245 | A1 | 1/2003 | Fiebig |
| 2003/0066858 | A1 | 4/2003 | Holgersson |
| 2003/0078647 | A1 | 4/2003 | Vallana et al. |
| 2003/0083648 | A1 | 5/2003 | Wang et al. |
| 2003/0084983 | A1 | 5/2003 | Rangachari et al. |

(56) **References Cited**

U.S. PATENT DOCUMENTS

2003/0093103 A1 5/2003 Malackowski et al.
2003/0094356 A1 5/2003 Waldron
2003/0096158 A1 5/2003 Takano et al.
2003/0114851 A1 6/2003 Truckai et al.
2003/0139741 A1 7/2003 Goble et al.
2003/0153908 A1 8/2003 Goble et al.
2003/0153968 A1 8/2003 Geis et al.
2003/0163085 A1 8/2003 Tanner et al.
2003/0181900 A1 9/2003 Long
2003/0190584 A1 10/2003 Heasley
2003/0195387 A1 10/2003 Kortenbach et al.
2003/0205029 A1 11/2003 Chapolini et al.
2003/0212005 A1 11/2003 Petito et al.
2003/0216732 A1 11/2003 Truckai et al.
2003/0236505 A1 12/2003 Bonadio et al.
2004/0006335 A1 1/2004 Garrison
2004/0006340 A1 1/2004 Latterell et al.
2004/0007608 A1 1/2004 Ehrenfels et al.
2004/0024457 A1 2/2004 Boyce et al.
2004/0028502 A1 2/2004 Cummins
2004/0030333 A1 2/2004 Goble
2004/0034357 A1 2/2004 Beane et al.
2004/0044364 A1 3/2004 DeVries et al.
2004/0049121 A1 3/2004 Yaron
2004/0049172 A1 3/2004 Root et al.
2004/0059362 A1 3/2004 Knodel et al.
2004/0068161 A1 4/2004 Couvillon
2004/0068224 A1 4/2004 Couvillon et al.
2004/0068307 A1 4/2004 Goble
2004/0070369 A1 4/2004 Sakakibara
2004/0073222 A1 4/2004 Koseki
2004/0078037 A1 4/2004 Batchelor et al.
2004/0085180 A1 5/2004 Juang
2004/0093024 A1 5/2004 Lousararian et al.
2004/0098040 A1 5/2004 Taniguchi et al.
2004/0101822 A1 5/2004 Wiesner et al.
2004/0102783 A1 5/2004 Sutterlin et al.
2004/0108357 A1 6/2004 Milliman et al.
2004/0110439 A1 6/2004 Chaikof et al.
2004/0115022 A1 6/2004 Albertson et al.
2004/0116952 A1 6/2004 Sakurai et al.
2004/0119185 A1 6/2004 Chen
2004/0122423 A1 6/2004 Dycus et al.
2004/0133095 A1 7/2004 Dunki-Jacobs et al.
2004/0143297 A1 7/2004 Ramsey
2004/0147909 A1 7/2004 Johnston et al.
2004/0153100 A1 8/2004 Ahlberg et al.
2004/0158261 A1 8/2004 Vu
2004/0164123 A1 8/2004 Racenet et al.
2004/0166169 A1 8/2004 Malaviya et al.
2004/0167572 A1 8/2004 Roth et al.
2004/0181219 A1 9/2004 Goble et al.
2004/0193189 A1 9/2004 Kortenbach et al.
2004/0197367 A1 10/2004 Rezania et al.
2004/0199181 A1 10/2004 Knodel et al.
2004/0204735 A1 10/2004 Shiroff et al.
2004/0222268 A1 11/2004 Bilotti et al.
2004/0225186 A1 11/2004 Horne et al.
2004/0232201 A1 11/2004 Wenchell et al.
2004/0236352 A1 11/2004 Wang et al.
2004/0243147 A1 12/2004 Lipow
2004/0243151 A1 12/2004 Demmy et al.
2004/0243163 A1 12/2004 Casiano et al.
2004/0247415 A1 12/2004 Mangone
2004/0249366 A1 12/2004 Kunz
2004/0254455 A1 12/2004 Iddan
2004/0254566 A1 12/2004 Plicchi et al.
2004/0254590 A1 12/2004 Hoffman et al.
2004/0260315 A1 12/2004 Dell et al.
2004/0267310 A1 12/2004 Racenet et al.
2005/0010158 A1 1/2005 Brugger et al.
2005/0010213 A1 1/2005 Stad et al.
2005/0021078 A1 1/2005 Vleugels et al.
2005/0032511 A1 2/2005 Malone et al.
2005/0033352 A1 2/2005 Zepf et al.
2005/0051163 A1 3/2005 Deem et al.
2005/0054946 A1 3/2005 Krzyzanowski
2005/0057225 A1 3/2005 Marquet
2005/0058890 A1 3/2005 Brazell et al.
2005/0059997 A1 3/2005 Bauman et al.
2005/0070929 A1 3/2005 Dalessandro et al.
2005/0075561 A1 4/2005 Golden
2005/0080342 A1 4/2005 Gilreath et al.
2005/0085693 A1 4/2005 Belson et al.
2005/0090817 A1 4/2005 Phan
2005/0096683 A1 5/2005 Ellins et al.
2005/0116673 A1 6/2005 Carl et al.
2005/0124855 A1 6/2005 Jaffe et al.
2005/0125897 A1 6/2005 Wyslucha et al.
2005/0130682 A1 6/2005 Takara et al.
2005/0131173 A1 6/2005 McDaniel et al.
2005/0131211 A1 6/2005 Bayley et al.
2005/0131390 A1 6/2005 Heinrich et al.
2005/0131436 A1 6/2005 Johnston et al.
2005/0131457 A1 6/2005 Douglas et al.
2005/0137454 A1 6/2005 Saadat et al.
2005/0137455 A1 6/2005 Ewers et al.
2005/0139636 A1 6/2005 Schwemberger et al.
2005/0143759 A1 6/2005 Kelly
2005/0143769 A1 6/2005 White et al.
2005/0145671 A1 7/2005 Viola
2005/0150928 A1 7/2005 Kameyama et al.
2005/0154258 A1 7/2005 Tartaglia et al.
2005/0154406 A1 7/2005 Bombard et al.
2005/0159778 A1 7/2005 Heinrich et al.
2005/0165419 A1 7/2005 Sauer et al.
2005/0169974 A1 8/2005 Tenerz et al.
2005/0171522 A1 8/2005 Christopherson
2005/0177181 A1 8/2005 Kagan et al.
2005/0177249 A1 8/2005 Kladakis et al.
2005/0182298 A1 8/2005 Ikeda et al.
2005/0184121 A1 8/2005 Heinrich
2005/0186240 A1 8/2005 Ringeisen et al.
2005/0187545 A1 8/2005 Hooven et al.
2005/0203550 A1 9/2005 Laufer et al.
2005/0209614 A1 9/2005 Fenter et al.
2005/0216055 A1 9/2005 Scirica et al.
2005/0222587 A1 10/2005 Jinno et al.
2005/0222611 A1 10/2005 Weitkamp
2005/0222616 A1 10/2005 Rethy et al.
2005/0222665 A1 10/2005 Aranyi
2005/0228224 A1 10/2005 Okada et al.
2005/0228446 A1 10/2005 Mooradian et al.
2005/0230453 A1 10/2005 Viola
2005/0240178 A1 10/2005 Morley et al.
2005/0245965 A1 11/2005 Orban, III et al.
2005/0251063 A1 11/2005 Basude
2005/0256452 A1 11/2005 DeMarchi et al.
2005/0261676 A1 11/2005 Hall et al.
2005/0263563 A1 12/2005 Racenet et al.
2005/0267455 A1 12/2005 Eggers et al.
2005/0274034 A1 12/2005 Hayashida et al.
2005/0283188 A1 12/2005 Loshakove et al.
2006/0008787 A1 1/2006 Hayman et al.
2006/0015009 A1 1/2006 Jaffe et al.
2006/0020258 A1 1/2006 Strauss et al.
2006/0020336 A1 1/2006 Liddicoat
2006/0025812 A1 2/2006 Shelton
2006/0041188 A1 2/2006 Dirusso et al.
2006/0047275 A1 3/2006 Goble
2006/0049229 A1 3/2006 Milliman et al.
2006/0052824 A1 3/2006 Ransick et al.
2006/0052825 A1 3/2006 Ransick et al.
2006/0064086 A1 3/2006 Odom
2006/0079735 A1 4/2006 Martone et al.
2006/0079879 A1 4/2006 Faller et al.
2006/0086032 A1 4/2006 Valencic et al.
2006/0087746 A1 4/2006 Lipow
2006/0089535 A1 4/2006 Raz et al.
2006/0100643 A1 5/2006 Laufer et al.
2006/0100649 A1 5/2006 Hart
2006/0111210 A1 5/2006 Hinman
2006/0111711 A1 5/2006 Goble
2006/0111723 A1 5/2006 Chapolini et al.

(56) **References Cited**

U.S. PATENT DOCUMENTS


| | | | |
|---|---|---|---|
| 2006/0116634 | A1 | 6/2006 | Shachar |
| 2006/0142772 | A1 | 6/2006 | Ralph et al. |
| 2006/0161050 | A1 | 7/2006 | Butler et al. |
| 2006/0161185 | A1 | 7/2006 | Saadat et al. |
| 2006/0167471 | A1 | 7/2006 | Phillips |
| 2006/0173470 | A1 | 8/2006 | Oray et al. |
| 2006/0176031 | A1 | 8/2006 | Forman et al. |
| 2006/0178556 | A1 | 8/2006 | Hasser et al. |
| 2006/0180633 | A1 | 8/2006 | Emmons |
| 2006/0180634 | A1 | 8/2006 | Shelton et al. |
| 2006/0185682 | A1 | 8/2006 | Marczyk |
| 2006/0199999 | A1 | 9/2006 | Ikeda et al. |
| 2006/0201989 | A1 | 9/2006 | Ojeda |
| 2006/0206100 | A1 | 9/2006 | Eskridge et al. |
| 2006/0217729 | A1 | 9/2006 | Eskridge et al. |
| 2006/0235368 | A1 | 10/2006 | Oz |
| 2006/0244460 | A1 | 11/2006 | Weaver |
| 2006/0252990 | A1 | 11/2006 | Kubach |
| 2006/0252993 | A1 | 11/2006 | Freed et al. |
| 2006/0258904 | A1 | 11/2006 | Stefanchik et al. |
| 2006/0259073 | A1 | 11/2006 | Miyamoto et al. |
| 2006/0261763 | A1 | 11/2006 | Iott et al. |
| 2006/0264831 | A1 | 11/2006 | Skwarek et al. |
| 2006/0264929 | A1 | 11/2006 | Goble et al. |
| 2006/0271042 | A1 | 11/2006 | Latterell et al. |
| 2006/0271102 | A1 | 11/2006 | Bosshard et al. |
| 2006/0282064 | A1 | 12/2006 | Shimizu et al. |
| 2006/0284730 | A1 | 12/2006 | Schmid et al. |
| 2006/0287576 | A1 | 12/2006 | Tsuji et al. |
| 2006/0289602 | A1 | 12/2006 | Wales et al. |
| 2006/0291981 | A1 | 12/2006 | Viola et al. |
| 2007/0010702 | A1 | 1/2007 | Wang et al. |
| 2007/0010838 | A1 | 1/2007 | Shelton et al. |
| 2007/0016235 | A1 | 1/2007 | Tanaka et al. |
| 2007/0026039 | A1 | 2/2007 | Drumheller et al. |
| 2007/0026040 | A1 | 2/2007 | Crawley et al. |
| 2007/0027468 | A1 | 2/2007 | Wales et al. |
| 2007/0027551 | A1 | 2/2007 | Farnsworth et al. |
| 2007/0043387 | A1 | 2/2007 | Vargas et al. |
| 2007/0049951 | A1 | 3/2007 | Menn |
| 2007/0049966 | A1 | 3/2007 | Bonadio et al. |
| 2007/0051375 | A1 | 3/2007 | Milliman |
| 2007/0055228 | A1 | 3/2007 | Berg et al. |
| 2007/0073341 | A1 | 3/2007 | Smith et al. |
| 2007/0073389 | A1 | 3/2007 | Bolduc et al. |
| 2007/0078328 | A1 | 4/2007 | Ozaki et al. |
| 2007/0078484 | A1 | 4/2007 | Talarico et al. |
| 2007/0084897 | A1 | 4/2007 | Shelton et al. |
| 2007/0090788 | A1 | 4/2007 | Hansford et al. |
| 2007/0093869 | A1 | 4/2007 | Bloom et al. |
| 2007/0102472 | A1 | 5/2007 | Shelton |
| 2007/0106113 | A1 | 5/2007 | Ravo |
| 2007/0106317 | A1 | 5/2007 | Shelton et al. |
| 2007/0134251 | A1 | 6/2007 | Ashkenazi et al. |
| 2007/0135686 | A1 | 6/2007 | Pruitt et al. |
| 2007/0135803 | A1 | 6/2007 | Belson |
| 2007/0155010 | A1 | 7/2007 | Farnsworth et al. |
| 2007/0170225 | A1 | 7/2007 | Shelton et al. |
| 2007/0173687 | A1 | 7/2007 | Shima et al. |
| 2007/0173813 | A1 | 7/2007 | Odom |
| 2007/0175950 | A1 | 8/2007 | Shelton et al. |
| 2007/0175951 | A1 | 8/2007 | Shelton et al. |
| 2007/0175955 | A1 | 8/2007 | Shelton et al. |
| 2007/0179477 | A1 | 8/2007 | Danger |
| 2007/0185545 | A1 | 8/2007 | Duke |
| 2007/0190110 | A1 | 8/2007 | Pameijer et al. |
| 2007/0191868 | A1 | 8/2007 | Theroux et al. |
| 2007/0194079 | A1 | 8/2007 | Hueil et al. |
| 2007/0194082 | A1 | 8/2007 | Morgan et al. |
| 2007/0197954 | A1 | 8/2007 | Keenan |
| 2007/0198039 | A1 | 8/2007 | Jones et al. |
| 2007/0203510 | A1 | 8/2007 | Bettuchi |
| 2007/0207010 | A1 | 9/2007 | Caspi |
| 2007/0208375 | A1 | 9/2007 | Nishizawa et al. |
| 2007/0213750 | A1 | 9/2007 | Weadock |
| 2007/0225562 | A1 | 9/2007 | Spivey et al. |
| 2007/0233163 | A1 | 10/2007 | Bombard et al. |
| 2007/0243227 | A1 | 10/2007 | Gertner |
| 2007/0244471 | A1 | 10/2007 | Malackowski |
| 2007/0246505 | A1 | 10/2007 | Pace-Floridia et al. |
| 2007/0275035 | A1 | 11/2007 | Herman et al. |
| 2007/0276409 | A1 | 11/2007 | Ortiz et al. |
| 2007/0279011 | A1 | 12/2007 | Jones et al. |
| 2007/0286892 | A1 | 12/2007 | Herzberg et al. |
| 2007/0296286 | A1 | 12/2007 | Avenell |
| 2008/0003196 | A1 | 1/2008 | Jonn et al. |
| 2008/0015598 | A1 | 1/2008 | Prommersberger |
| 2008/0021486 | A1 | 1/2008 | Oyola et al. |
| 2008/0029570 | A1 | 2/2008 | Shelton et al. |
| 2008/0029573 | A1 | 2/2008 | Shelton et al. |
| 2008/0029574 | A1 | 2/2008 | Shelton et al. |
| 2008/0029575 | A1 | 2/2008 | Shelton et al. |
| 2008/0030170 | A1 | 2/2008 | Dacquay et al. |
| 2008/0042861 | A1 | 2/2008 | Dacquay et al. |
| 2008/0051833 | A1 | 2/2008 | Gramuglia et al. |
| 2008/0064921 | A1 | 3/2008 | Larkin et al. |
| 2008/0065153 | A1 | 3/2008 | Allard et al. |
| 2008/0071328 | A1 | 3/2008 | Haubrich et al. |
| 2008/0078802 | A1 | 4/2008 | Hess et al. |
| 2008/0082114 | A1 | 4/2008 | McKenna et al. |
| 2008/0082125 | A1 | 4/2008 | Murray et al. |
| 2008/0082126 | A1 | 4/2008 | Murray et al. |
| 2008/0083807 | A1 | 4/2008 | Beardsley et al. |
| 2008/0085296 | A1 | 4/2008 | Powell et al. |
| 2008/0086078 | A1 | 4/2008 | Powell et al. |
| 2008/0091072 | A1 | 4/2008 | Omori et al. |
| 2008/0108443 | A1 | 5/2008 | Jinno et al. |
| 2008/0114250 | A1 | 5/2008 | Urbano et al. |
| 2008/0125749 | A1 | 5/2008 | Olson |
| 2008/0128469 | A1 | 6/2008 | Dalessandro et al. |
| 2008/0129253 | A1 | 6/2008 | Shiue et al. |
| 2008/0135600 | A1 | 6/2008 | Hiranuma et al. |
| 2008/0140115 | A1 | 6/2008 | Stopek |
| 2008/0140159 | A1 | 6/2008 | Bornhoft et al. |
| 2008/0154299 | A1 | 6/2008 | Livneh |
| 2008/0154335 | A1 | 6/2008 | Thrope et al. |
| 2008/0169328 | A1 | 7/2008 | Shelton |
| 2008/0169332 | A1 | 7/2008 | Shelton et al. |
| 2008/0169333 | A1 | 7/2008 | Shelton et al. |
| 2008/0172087 | A1 | 7/2008 | Fuchs et al. |
| 2008/0183193 | A1 | 7/2008 | Omori et al. |
| 2008/0190989 | A1 | 8/2008 | Crews et al. |
| 2008/0196419 | A1 | 8/2008 | Dube |
| 2008/0197167 | A1 | 8/2008 | Viola et al. |
| 2008/0200755 | A1 | 8/2008 | Bakos |
| 2008/0200762 | A1 | 8/2008 | Stokes et al. |
| 2008/0200835 | A1 | 8/2008 | Monson et al. |
| 2008/0200911 | A1 | 8/2008 | Long |
| 2008/0200933 | A1 | 8/2008 | Bakos et al. |
| 2008/0200934 | A1 | 8/2008 | Fox |
| 2008/0234709 | A1 | 9/2008 | Houser |
| 2008/0242939 | A1 | 10/2008 | Johnston |
| 2008/0249536 | A1 | 10/2008 | Stahler et al. |
| 2008/0249608 | A1 | 10/2008 | Dave |
| 2008/0255413 | A1 | 10/2008 | Zemlok et al. |
| 2008/0262654 | A1 | 10/2008 | Omori et al. |
| 2008/0269596 | A1 | 10/2008 | Revie et al. |
| 2008/0281171 | A1 | 11/2008 | Fennell et al. |
| 2008/0287944 | A1 | 11/2008 | Pearson et al. |
| 2008/0293910 | A1 | 11/2008 | Kapiamba et al. |
| 2008/0294179 | A1 | 11/2008 | Balbierz et al. |
| 2008/0296346 | A1 | 12/2008 | Shelton, IV et al. |
| 2008/0297287 | A1 | 12/2008 | Shachar et al. |
| 2008/0308602 | A1 | 12/2008 | Timm et al. |
| 2008/0308603 | A1 | 12/2008 | Shelton et al. |
| 2008/0312687 | A1 | 12/2008 | Blier |
| 2008/0315829 | A1 | 12/2008 | Jones et al. |
| 2009/0001121 | A1 | 1/2009 | Hess et al. |
| 2009/0001130 | A1 | 1/2009 | Hess et al. |
| 2009/0004455 | A1 | 1/2009 | Gravagna et al. |
| 2009/0005809 | A1 | 1/2009 | Hess et al. |
| 2009/0012534 | A1 | 1/2009 | Madhani et al. |
| 2009/0015195 | A1 | 1/2009 | Loth-Krausser |
| 2009/0020958 | A1 | 1/2009 | Soul |

(56) **References Cited**

U.S. PATENT DOCUMENTS


| | | | |
|---|---|---|---|
| 2009/0048583 | A1 | 2/2009 | Williams et al. |
| 2009/0048589 | A1 | 2/2009 | Takashino et al. |
| 2009/0076506 | A1 | 3/2009 | Baker |
| 2009/0078736 | A1 | 3/2009 | Van Lue |
| 2009/0081313 | A1 | 3/2009 | Aghion et al. |
| 2009/0088659 | A1 | 4/2009 | Graham et al. |
| 2009/0090763 | A1 | 4/2009 | Zemlok et al. |
| 2009/0092651 | A1 | 4/2009 | Shah et al. |
| 2009/0099579 | A1 | 4/2009 | Nentwick et al. |
| 2009/0099876 | A1 | 4/2009 | Whitman |
| 2009/0119011 | A1 | 5/2009 | Kondo et al. |
| 2009/0143855 | A1 | 6/2009 | Weber et al. |
| 2009/0149871 | A9 | 6/2009 | Kagan et al. |
| 2009/0171147 | A1 | 7/2009 | Lee et al. |
| 2009/0177226 | A1 | 7/2009 | Reinprecht et al. |
| 2009/0181290 | A1 | 7/2009 | Baldwin et al. |
| 2009/0188964 | A1 | 7/2009 | Orlov |
| 2009/0198272 | A1 | 8/2009 | Kerver et al. |
| 2009/0204108 | A1 | 8/2009 | Steffen |
| 2009/0204109 | A1 | 8/2009 | Grove et al. |
| 2009/0206125 | A1 | 8/2009 | Huitema et al. |
| 2009/0206126 | A1 | 8/2009 | Huitema et al. |
| 2009/0206131 | A1 | 8/2009 | Weisenburgh, II et al. |
| 2009/0206133 | A1 | 8/2009 | Morgan et al. |
| 2009/0206137 | A1 | 8/2009 | Hall et al. |
| 2009/0206139 | A1 | 8/2009 | Hall et al. |
| 2009/0206141 | A1 | 8/2009 | Huitema et al. |
| 2009/0206142 | A1 | 8/2009 | Huitema et al. |
| 2009/0221993 | A1 | 9/2009 | Sohi et al. |
| 2009/0234273 | A1 | 9/2009 | Intoccia et al. |
| 2009/0242610 | A1 | 10/2009 | Shelton, IV et al. |
| 2009/0247368 | A1 | 10/2009 | Chiang |
| 2009/0247901 | A1 | 10/2009 | Zimmer |
| 2009/0248041 | A1 | 10/2009 | Williams et al. |
| 2009/0253959 | A1 | 10/2009 | Yoshie et al. |
| 2009/0255974 | A1 | 10/2009 | Viola |
| 2009/0262078 | A1 | 10/2009 | Pizzi |
| 2009/0270895 | A1 | 10/2009 | Churchill et al. |
| 2009/0290016 | A1 | 11/2009 | Suda |
| 2009/0292283 | A1 | 11/2009 | Odom |
| 2009/0306639 | A1 | 12/2009 | Nevo et al. |
| 2009/0308907 | A1 | 12/2009 | Nalagatla et al. |
| 2010/0012703 | A1 | 1/2010 | Calabrese et al. |
| 2010/0016888 | A1 | 1/2010 | Calabrese et al. |
| 2010/0023024 | A1 | 1/2010 | Zeiner et al. |
| 2010/0030233 | A1 | 2/2010 | Whitman et al. |
| 2010/0036370 | A1 | 2/2010 | Mirel et al. |
| 2010/0065604 | A1 | 3/2010 | Weng |
| 2010/0069942 | A1 | 3/2010 | Shelton, IV |
| 2010/0076483 | A1 | 3/2010 | Imuta |
| 2010/0076489 | A1 | 3/2010 | Stopek et al. |
| 2010/0081883 | A1 | 4/2010 | Murray et al. |
| 2010/0094340 | A1 | 4/2010 | Stopek et al. |
| 2010/0100124 | A1 | 4/2010 | Calabrese et al. |
| 2010/0116519 | A1 | 5/2010 | Gareis |
| 2010/0122339 | A1 | 5/2010 | Boccacci |
| 2010/0133317 | A1 | 6/2010 | Shelton, IV et al. |
| 2010/0145146 | A1 | 6/2010 | Melder |
| 2010/0147921 | A1 | 6/2010 | Olson |
| 2010/0147922 | A1 | 6/2010 | Olson |
| 2010/0179022 | A1 | 7/2010 | Shirokoshi |
| 2010/0180711 | A1 | 7/2010 | Kilibarda et al. |
| 2010/0191262 | A1 | 7/2010 | Harris et al. |
| 2010/0191292 | A1 | 7/2010 | DeMeo et al. |
| 2010/0193566 | A1 | 8/2010 | Scheib et al. |
| 2010/0204717 | A1 | 8/2010 | Knodel |
| 2010/0222901 | A1 | 9/2010 | Swayze et al. |
| 2010/0249497 | A1 | 9/2010 | Peine et al. |
| 2010/0256675 | A1 | 10/2010 | Romans |
| 2010/0258327 | A1 | 10/2010 | Esenwein et al. |
| 2010/0267662 | A1 | 10/2010 | Fielder et al. |
| 2010/0274160 | A1 | 10/2010 | Yachi et al. |
| 2010/0292540 | A1 | 11/2010 | Hess et al. |
| 2010/0298636 | A1 | 11/2010 | Castro et al. |
| 2010/0312261 | A1 | 12/2010 | Suzuki et al. |
| 2010/0318085 | A1 | 12/2010 | Austin et al. |
| 2010/0331856 | A1 | 12/2010 | Carlson et al. |
| 2011/0006101 | A1 | 1/2011 | Hall et al. |
| 2011/0011916 | A1 | 1/2011 | Levine |
| 2011/0016960 | A1 | 1/2011 | Debrailly |
| 2011/0021871 | A1 | 1/2011 | Berkelaar |
| 2011/0022032 | A1 | 1/2011 | Zemlok et al. |
| 2011/0024477 | A1 | 2/2011 | Hall |
| 2011/0024478 | A1 | 2/2011 | Shelton, IV |
| 2011/0025311 | A1 | 2/2011 | Chauvin et al. |
| 2011/0034910 | A1 | 2/2011 | Ross et al. |
| 2011/0036891 | A1 | 2/2011 | Zemlok et al. |
| 2011/0046667 | A1 | 2/2011 | Culligan et al. |
| 2011/0060363 | A1 | 3/2011 | Hess et al. |
| 2011/0066156 | A1 | 3/2011 | McGahan et al. |
| 2011/0082538 | A1 | 4/2011 | Dahlgren et al. |
| 2011/0087276 | A1 | 4/2011 | Bedi et al. |
| 2011/0087278 | A1 | 4/2011 | Viola et al. |
| 2011/0088921 | A1 | 4/2011 | Forgues et al. |
| 2011/0095064 | A1 | 4/2011 | Taylor et al. |
| 2011/0101069 | A1 | 5/2011 | Bombard et al. |
| 2011/0101794 | A1 | 5/2011 | Schroeder et al. |
| 2011/0112517 | A1 | 5/2011 | Peine et al. |
| 2011/0112530 | A1 | 5/2011 | Keller |
| 2011/0114697 | A1 | 5/2011 | Baxter, III et al. |
| 2011/0121049 | A1 | 5/2011 | Malinouskas et al. |
| 2011/0125176 | A1 | 5/2011 | Yates et al. |
| 2011/0127945 | A1 | 6/2011 | Yoneda |
| 2011/0129706 | A1 | 6/2011 | Takahashi et al. |
| 2011/0144764 | A1 | 6/2011 | Bagga et al. |
| 2011/0147433 | A1 | 6/2011 | Shelton, IV et al. |
| 2011/0163146 | A1 | 7/2011 | Ortiz et al. |
| 2011/0172495 | A1 | 7/2011 | Armstrong |
| 2011/0174861 | A1 | 7/2011 | Shelton, IV et al. |
| 2011/0192882 | A1 | 8/2011 | Hess et al. |
| 2011/0199225 | A1 | 8/2011 | Touchberry et al. |
| 2011/0218400 | A1 | 9/2011 | Ma et al. |
| 2011/0218550 | A1 | 9/2011 | Ma |
| 2011/0230713 | A1 | 9/2011 | Kleemann et al. |
| 2011/0238044 | A1 | 9/2011 | Main et al. |
| 2011/0241597 | A1 | 10/2011 | Zhu et al. |
| 2011/0275901 | A1 | 11/2011 | Shelton, IV |
| 2011/0276083 | A1 | 11/2011 | Shelton, IV et al. |
| 2011/0278343 | A1 | 11/2011 | Knodel et al. |
| 2011/0279268 | A1 | 11/2011 | Konishi et al. |
| 2011/0290856 | A1 | 12/2011 | Shelton, IV et al. |
| 2011/0293690 | A1 | 12/2011 | Griffin et al. |
| 2011/0295295 | A1 | 12/2011 | Shelton, IV et al. |
| 2011/0313894 | A1 | 12/2011 | Dye et al. |
| 2011/0315413 | A1 | 12/2011 | Fisher et al. |
| 2012/0004636 | A1 | 1/2012 | Lo |
| 2012/0016239 | A1 | 1/2012 | Barthe et al. |
| 2012/0016413 | A1 | 1/2012 | Timm et al. |
| 2012/0016467 | A1 | 1/2012 | Chen et al. |
| 2012/0029272 | A1 | 2/2012 | Shelton, IV et al. |
| 2012/0033360 | A1 | 2/2012 | Hsu |
| 2012/0059286 | A1 | 3/2012 | Hastings et al. |
| 2012/0064483 | A1 | 3/2012 | Lint et al. |
| 2012/0074200 | A1 | 3/2012 | Schmid et al. |
| 2012/0078071 | A1 | 3/2012 | Bohm et al. |
| 2012/0078139 | A1 | 3/2012 | Aldridge et al. |
| 2012/0078244 | A1 | 3/2012 | Worrell et al. |
| 2012/0080336 | A1 | 4/2012 | Shelton, IV et al. |
| 2012/0080340 | A1 | 4/2012 | Shelton, IV et al. |
| 2012/0080344 | A1 | 4/2012 | Shelton, IV |
| 2012/0080478 | A1 | 4/2012 | Morgan et al. |
| 2012/0080498 | A1 | 4/2012 | Shelton, IV et al. |
| 2012/0086276 | A1 | 4/2012 | Sawyers |
| 2012/0095458 | A1 | 4/2012 | Cybulski et al. |
| 2012/0109186 | A1 | 5/2012 | Parrott et al. |
| 2012/0116261 | A1 | 5/2012 | Mumaw et al. |
| 2012/0116262 | A1 | 5/2012 | Houser et al. |
| 2012/0116265 | A1 | 5/2012 | Houser et al. |
| 2012/0116266 | A1 | 5/2012 | Houser et al. |
| 2012/0118595 | A1 | 5/2012 | Pellenc |
| 2012/0123203 | A1 | 5/2012 | Riva |
| 2012/0125792 | A1 | 5/2012 | Cassivi |
| 2012/0132286 | A1 | 5/2012 | Lim et al. |
| 2012/0171539 | A1 | 7/2012 | Rejman et al. |

(56) **References Cited**

U.S. PATENT DOCUMENTS

2012/0175398 A1 7/2012 Sandborn et al.
2012/0197272 A1 8/2012 Oray et al.
2012/0211542 A1 8/2012 Racenet
2012/0223121 A1 9/2012 Viola et al.
2012/0234895 A1 9/2012 O'Connor et al.
2012/0234897 A1 9/2012 Shelton, IV et al.
2012/0239068 A1 9/2012 Morris et al.
2012/0241493 A1 9/2012 Baxter et al.
2012/0248169 A1 10/2012 Widenhouse et al.
2012/0251861 A1 10/2012 Liang et al.
2012/0253328 A1 10/2012 Cunningham et al.
2012/0283707 A1 11/2012 Giordano et al.
2012/0289979 A1 11/2012 Eskaros et al.
2012/0292367 A1 11/2012 Morgan et al.
2012/0298722 A1 11/2012 Hess et al.
2012/0303002 A1 11/2012 Chowaniec et al.
2013/0006227 A1 1/2013 Takashino
2013/0012983 A1 1/2013 Kleyman
2013/0018400 A1 1/2013 Milton et al.
2013/0020375 A1 1/2013 Shelton, IV et al.
2013/0020376 A1 1/2013 Shelton, IV et al.
2013/0023861 A1 1/2013 Shelton, IV et al.
2013/0023910 A1 1/2013 Solomon et al.
2013/0026208 A1 1/2013 Shelton, IV et al.
2013/0026210 A1 1/2013 Shelton, IV et al.
2013/0030462 A1 1/2013 Keating et al.
2013/0068816 A1 3/2013 Mandakolathur Vasudevan et al.
2013/0087597 A1 4/2013 Shelton, IV et al.
2013/0090534 A1 4/2013 Burns et al.
2013/0096568 A1 4/2013 Justis
2013/0098970 A1 4/2013 Racenet et al.
2013/0105552 A1 5/2013 Weir et al.
2013/0116669 A1 5/2013 Shelton, IV et al.
2013/0123816 A1 5/2013 Hodgkinson et al.
2013/0126202 A1 5/2013 Oomori et al.
2013/0131476 A1 5/2013 Siu et al.
2013/0131651 A1 5/2013 Strobl et al.
2013/0136969 A1 5/2013 Yasui et al.
2013/0153636 A1 6/2013 Shelton, IV et al.
2013/0153641 A1 6/2013 Shelton, IV et al.
2013/0158390 A1 6/2013 Tan et al.
2013/0162198 A1 6/2013 Yokota et al.
2013/0172878 A1 7/2013 Smith
2013/0172929 A1 7/2013 Hess et al.
2013/0175317 A1 7/2013 Yates et al.
2013/0181033 A1 7/2013 Shelton, IV et al.
2013/0181034 A1 7/2013 Shelton, IV et al.
2013/0214025 A1 8/2013 Zemlok et al.
2013/0214030 A1 8/2013 Aronhalt et al.
2013/0233906 A1 9/2013 Hess et al.
2013/0238021 A1 9/2013 Gross et al.
2013/0248578 A1 9/2013 Arteaga Gonzalez
2013/0253480 A1 9/2013 Kimball et al.
2013/0256373 A1 10/2013 Schmid et al.
2013/0256379 A1 10/2013 Schmid et al.
2013/0256380 A1 10/2013 Schmid et al.
2013/0270322 A1 10/2013 Scheib et al.
2013/0277410 A1 10/2013 Fernandez et al.
2013/0317753 A1 11/2013 Kamen et al.
2013/0324981 A1 12/2013 Smith et al.
2013/0324982 A1 12/2013 Smith et al.
2013/0327552 A1 12/2013 Lovelass et al.
2013/0333910 A1 12/2013 Tanimoto et al.
2013/0334280 A1 12/2013 Krehel et al.
2013/0334283 A1 12/2013 Swayze et al.
2013/0334284 A1 12/2013 Swayze et al.
2013/0334285 A1 12/2013 Swayze et al.
2013/0341374 A1 12/2013 Shelton, IV et al.
2014/0001231 A1 1/2014 Shelton, IV et al.
2014/0001234 A1 1/2014 Shelton, IV et al.
2014/0005640 A1 1/2014 Shelton, IV et al.
2014/0005678 A1 1/2014 Shelton, IV et al.
2014/0005702 A1 1/2014 Timm et al.
2014/0005718 A1 1/2014 Shelton, IV et al.
2014/0012289 A1 1/2014 Snow et al.
2014/0012299 A1 1/2014 Stoddard et al.
2014/0014705 A1 1/2014 Baxter, III
2014/0018832 A1 1/2014 Shelton, IV
2014/0039549 A1 2/2014 Belsky et al.
2014/0048580 A1 2/2014 Merchant et al.
2014/0081176 A1 3/2014 Hassan
2014/0100558 A1 4/2014 Schmitz et al.
2014/0107640 A1 4/2014 Yates et al.
2014/0110456 A1 4/2014 Taylor
2014/0114327 A1 4/2014 Boudreaux et al.
2014/0115229 A1 4/2014 Kothamasu et al.
2014/0131418 A1 5/2014 Kostrzewski
2014/0151433 A1 6/2014 Shelton, IV et al.
2014/0158747 A1 6/2014 Measamer et al.
2014/0166724 A1 6/2014 Schellin et al.
2014/0166725 A1 6/2014 Schellin et al.
2014/0166726 A1 6/2014 Schellin et al.
2014/0171966 A1 6/2014 Giordano et al.
2014/0175147 A1 6/2014 Manoux et al.
2014/0175150 A1 6/2014 Shelton, IV et al.
2014/0175152 A1 6/2014 Hess et al.
2014/0188159 A1 7/2014 Steege
2014/0200561 A1 7/2014 Ingmanson et al.
2014/0207124 A1 7/2014 Aldridge et al.
2014/0207125 A1 7/2014 Applegate et al.
2014/0224857 A1 8/2014 Schmid
2014/0228867 A1 8/2014 Thomas et al.
2014/0230595 A1 8/2014 Butt et al.
2014/0243865 A1 8/2014 Swayze et al.
2014/0246475 A1 9/2014 Hall et al.
2014/0248167 A1 9/2014 Sugimoto et al.
2014/0249557 A1 9/2014 Koch, Jr. et al.
2014/0249573 A1 9/2014 Arav
2014/0263541 A1 9/2014 Leimbach et al.
2014/0263552 A1 9/2014 Hall et al.
2014/0263554 A1 9/2014 Leimbach et al.
2014/0263558 A1 9/2014 Hausen et al.
2014/0276730 A1 9/2014 Boudreaux et al.
2014/0284371 A1 9/2014 Morgan et al.
2014/0288460 A1 9/2014 Ouyang et al.
2014/0291378 A1 10/2014 Shelton, IV et al.
2014/0291379 A1 10/2014 Schellin et al.
2014/0291383 A1 10/2014 Spivey et al.
2014/0299648 A1 10/2014 Shelton, IV et al.
2014/0303645 A1 10/2014 Morgan et al.
2014/0303660 A1 10/2014 Boyden et al.
2014/0305990 A1 10/2014 Shelton, IV et al.
2014/0305991 A1 10/2014 Parihar et al.
2014/0309666 A1 10/2014 Shelton, IV et al.
2014/0330161 A1 11/2014 Swayze et al.
2014/0367445 A1 12/2014 Ingmanson et al.
2014/0374130 A1 12/2014 Nakamura et al.
2014/0378950 A1 12/2014 Chiu
2015/0002089 A1 1/2015 Rejman et al.
2015/0008248 A1 1/2015 Giordano et al.
2015/0053737 A1 2/2015 Leimbach et al.
2015/0053742 A1 2/2015 Shelton, IV et al.
2015/0053743 A1 2/2015 Yates et al.
2015/0053746 A1 2/2015 Shelton, IV et al.
2015/0053748 A1 2/2015 Yates et al.
2015/0060518 A1 3/2015 Shelton, IV et al.
2015/0060519 A1 3/2015 Shelton, IV et al.
2015/0060520 A1 3/2015 Shelton, IV et al.
2015/0060521 A1 3/2015 Weisenburgh, II et al.
2015/0066000 A1 3/2015 An et al.
2015/0076207 A1 3/2015 Boudreaux et al.
2015/0076208 A1 3/2015 Shelton, IV
2015/0076209 A1 3/2015 Shelton, IV et al.
2015/0076210 A1 3/2015 Shelton, IV et al.
2015/0076212 A1 3/2015 Shelton, IV
2015/0080868 A1 3/2015 Kerr
2015/0083781 A1 3/2015 Giordano et al.
2015/0083782 A1 3/2015 Scheib et al.
2015/0090760 A1 4/2015 Giordano et al.
2015/0090761 A1 4/2015 Giordano et al.
2015/0090762 A1 4/2015 Giordano et al.
2015/0090763 A1 4/2015 Murray et al.
2015/0108199 A1 4/2015 Shelton, IV et al.
2015/0122870 A1 5/2015 Zemlok et al.

(56) **References Cited**

U.S. PATENT DOCUMENTS

2015/0148830 A1 5/2015 Stulen et al.
2015/0150554 A1 6/2015 Soltz
2015/0150620 A1 6/2015 Miyamoto et al.
2015/0173744 A1 6/2015 Shelton, IV et al.
2015/0173749 A1 6/2015 Shelton, IV et al.
2015/0173756 A1 6/2015 Baxter, III et al.
2015/0173789 A1 6/2015 Baxter, III et al.
2015/0182220 A1 7/2015 Yates et al.
2015/0196295 A1 7/2015 Shelton, IV et al.
2015/0196296 A1 7/2015 Swayze et al.
2015/0196299 A1 7/2015 Swayze et al.
2015/0196347 A1 7/2015 Yates et al.
2015/0196348 A1 7/2015 Yates et al.
2015/0201932 A1 7/2015 Swayze et al.
2015/0201936 A1 7/2015 Swayze et al.
2015/0201937 A1 7/2015 Swayze et al.
2015/0201938 A1 7/2015 Swayze et al.
2015/0201939 A1 7/2015 Swayze et al.
2015/0201940 A1 7/2015 Swayze et al.
2015/0201941 A1 7/2015 Swayze et al.
2015/0209031 A1 7/2015 Shelton, IV et al.
2015/0222212 A1 8/2015 Iwata
2015/0231409 A1 8/2015 Racenet et al.
2015/0245835 A1 9/2015 Racenet et al.
2015/0265276 A1 9/2015 Huitema et al.
2015/0265357 A1 9/2015 Shelton, IV et al.
2015/0272557 A1 10/2015 Overmyer et al.
2015/0272571 A1 10/2015 Leimbach et al.
2015/0272580 A1 10/2015 Leimbach et al.
2015/0272582 A1 10/2015 Leimbach et al.
2015/0272604 A1 10/2015 Chowaniec et al.
2015/0280384 A1 10/2015 Leimbach et al.
2015/0282810 A1 10/2015 Shelton, IV et al.
2015/0289873 A1 10/2015 Shelton, IV et al.
2015/0289874 A1 10/2015 Leimbach et al.
2015/0297200 A1 10/2015 Fitzsimmons et al.
2015/0297210 A1 10/2015 Widenhouse et al.
2015/0297219 A1 10/2015 Shelton, IV et al.
2015/0297222 A1 10/2015 Huitema et al.
2015/0297223 A1 10/2015 Huitema et al.
2015/0297225 A1 10/2015 Huitema et al.
2015/0297228 A1 10/2015 Huitema et al.
2015/0297229 A1 10/2015 Schellin et al.
2015/0297232 A1 10/2015 Huitema et al.
2015/0297233 A1 10/2015 Huitema et al.
2015/0297234 A1 10/2015 Schellin et al.
2015/0297235 A1 10/2015 Harris et al.
2015/0297236 A1 10/2015 Harris et al.
2015/0303417 A1 10/2015 Koeder et al.
2015/0305729 A1 10/2015 Fitzsimmons et al.
2015/0313594 A1 11/2015 Shelton, IV et al.
2015/0324317 A1 11/2015 Collins et al.
2015/0327864 A1 11/2015 Hodgkinson et al.
2015/0335328 A1 11/2015 Shelton, IV et al.
2015/0336249 A1 11/2015 Iwata et al.
2015/0342607 A1 12/2015 Shelton, IV et al.
2015/0351758 A1 12/2015 Shelton, IV et al.
2015/0351762 A1 12/2015 Vendely et al.
2015/0351765 A1 12/2015 Valentine et al.
2015/0352699 A1 12/2015 Sakai et al.
2015/0366220 A1 12/2015 Zhang et al.
2015/0372265 A1 12/2015 Morisaku et al.
2015/0374360 A1 12/2015 Scheib et al.
2015/0374361 A1 12/2015 Gettinger et al.
2015/0374363 A1 12/2015 Laurent, IV et al.
2015/0374368 A1 12/2015 Swayze et al.
2015/0374369 A1 12/2015 Yates et al.
2015/0374371 A1 12/2015 Richard et al.
2015/0374374 A1 12/2015 Shelton, IV et al.
2015/0374375 A1 12/2015 Shelton, IV et al.
2015/0374376 A1 12/2015 Shelton, IV
2015/0374377 A1 12/2015 Shelton, IV
2015/0374378 A1 12/2015 Giordano et al.
2015/0374379 A1 12/2015 Shelton, IV
2015/0380187 A1 12/2015 Zergiebel et al.
2016/0000430 A1 1/2016 Ming et al.
2016/0000431 A1 1/2016 Giordano et al.
2016/0000437 A1 1/2016 Giordano et al.
2016/0000438 A1 1/2016 Swayze et al.
2016/0000442 A1 1/2016 Shelton, IV
2016/0000452 A1 1/2016 Yates et al.
2016/0000453 A1 1/2016 Yates et al.
2016/0000513 A1 1/2016 Shelton, IV et al.
2016/0007992 A1 1/2016 Yates et al.
2016/0008023 A1 1/2016 Yates et al.
2016/0015391 A1 1/2016 Shelton, IV et al.
2016/0023342 A1 1/2016 Koenig et al.
2016/0030042 A1 2/2016 Heinrich et al.
2016/0030103 A1 2/2016 Manwaring et al.
2016/0051257 A1 2/2016 Shelton, IV et al.
2016/0058443 A1 3/2016 Yates et al.
2016/0066911 A1 3/2016 Baber et al.
2016/0066913 A1 3/2016 Swayze et al.
2016/0069449 A1 3/2016 Kanai et al.
2016/0073909 A1 3/2016 Zand et al.
2016/0074040 A1 3/2016 Widenhouse et al.
2016/0082161 A1 3/2016 Zilberman et al.
2016/0089137 A1 3/2016 Hess et al.
2016/0089142 A1 3/2016 Harris et al.
2016/0089146 A1 3/2016 Harris et al.
2016/0089147 A1 3/2016 Harris et al.
2016/0089149 A1 3/2016 Harris et al.
2016/0089198 A1 3/2016 Arya et al.
2016/0095585 A1 4/2016 Zergiebel et al.
2016/0106431 A1 4/2016 Shelton, IV et al.
2016/0113653 A1 4/2016 Zingman
2016/0120544 A1 5/2016 Shelton, IV et al.
2016/0120545 A1 5/2016 Shelton, IV et al.
2016/0166256 A1 6/2016 Baxter, III et al.
2016/0166308 A1 6/2016 Manwaring et al.
2016/0174969 A1 6/2016 Kerr et al.
2016/0174972 A1 6/2016 Shelton, IV et al.
2016/0174974 A1 6/2016 Schmid et al.
2016/0174984 A1 6/2016 Smith et al.
2016/0174985 A1 6/2016 Baxter, III et al.
2016/0183939 A1 6/2016 Shelton, IV et al.
2016/0183943 A1 6/2016 Shelton, IV
2016/0183944 A1 6/2016 Swensgard et al.
2016/0183945 A1 6/2016 Shelton, IV et al.
2016/0192916 A1 7/2016 Shelton, IV et al.
2016/0192917 A1 7/2016 Shelton, IV et al.
2016/0192918 A1 7/2016 Shelton, IV et al.
2016/0192933 A1 7/2016 Shelton, IV
2016/0192936 A1 7/2016 Leimbach et al.
2016/0192977 A1 7/2016 Manwaring et al.
2016/0192996 A1 7/2016 Spivey et al.
2016/0199059 A1 7/2016 Shelton, IV et al.
2016/0199061 A1 7/2016 Shelton, IV et al.
2016/0199063 A1 7/2016 Mandakolathur Vasudevan et al.
2016/0199064 A1 7/2016 Shelton, IV et al.
2016/0199089 A1 7/2016 Hess et al.
2016/0199956 A1 7/2016 Shelton, IV et al.
2016/0206310 A1 7/2016 Shelton, IV
2016/0206314 A1 7/2016 Scheib et al.
2016/0220248 A1 8/2016 Timm et al.
2016/0220249 A1 8/2016 Shelton, IV et al.
2016/0220266 A1 8/2016 Shelton, IV et al.
2016/0220268 A1 8/2016 Shelton, IV et al.
2016/0235403 A1 8/2016 Shelton, IV et al.
2016/0235404 A1 8/2016 Shelton, IV
2016/0235405 A1 8/2016 Shelton, IV et al.
2016/0235406 A1 8/2016 Shelton, IV et al.
2016/0235408 A1 8/2016 Shelton, IV et al.
2016/0235409 A1 8/2016 Shelton, IV et al.
2016/0235494 A1 8/2016 Shelton, IV et al.
2016/0242775 A1 8/2016 Shelton, IV et al.
2016/0242776 A1 8/2016 Shelton, IV et al.
2016/0242781 A1 8/2016 Shelton, IV et al.
2016/0242782 A1 8/2016 Shelton, IV et al.
2016/0242783 A1 8/2016 Shelton, IV et al.
2016/0249909 A1 9/2016 Shelton, IV et al.
2016/0249910 A1 9/2016 Shelton, IV et al.
2016/0249911 A1 9/2016 Timm et al.
2016/0249915 A1 9/2016 Beckman et al.

(56) **References Cited**

U.S. PATENT DOCUMENTS

2016/0249916 A1 9/2016 Shelton, IV et al.
2016/0249917 A1 9/2016 Beckman et al.
2016/0249918 A1 9/2016 Shelton, IV et al.
2016/0249922 A1 9/2016 Morgan et al.
2016/0249927 A1 9/2016 Beckman et al.
2016/0256071 A1 9/2016 Shelton, IV et al.
2016/0256154 A1 9/2016 Shelton, IV et al.
2016/0256156 A1 9/2016 Shelton, IV et al.
2016/0256159 A1 9/2016 Pinjala et al.
2016/0256160 A1 9/2016 Shelton, IV et al.
2016/0256161 A1 9/2016 Overmyer et al.
2016/0256185 A1 9/2016 Shelton, IV et al.
2016/0256229 A1 9/2016 Morgan et al.
2016/0262745 A1 9/2016 Morgan et al.
2016/0262746 A1 9/2016 Shelton, IV et al.
2016/0270780 A1 9/2016 Hall et al.
2016/0278765 A1 9/2016 Shelton, IV et al.
2016/0278775 A1 9/2016 Shelton, IV et al.
2016/0287249 A1 10/2016 Alexander, III et al.
2016/0287250 A1 10/2016 Shelton, IV et al.
2016/0287251 A1 10/2016 Shelton, IV et al.
2016/0287253 A1 10/2016 Shelton, IV et al.
2016/0310143 A1 10/2016 Bettuchi
2016/0331375 A1 11/2016 Shelton, IV et al.
2016/0345976 A1 12/2016 Gonzalez et al.
2016/0346034 A1 12/2016 Arya et al.
2016/0354085 A1 12/2016 Shelton, IV et al.
2016/0367122 A1 12/2016 Ichimura et al.
2016/0367245 A1 12/2016 Wise et al.
2016/0367246 A1 12/2016 Baxter et al.
2016/0367247 A1 12/2016 Weaner et al.
2016/0367254 A1 12/2016 Baxter, III et al.
2016/0367255 A1 12/2016 Wise et al.
2016/0367256 A1 12/2016 Hensel et al.
2016/0374675 A1 12/2016 Shelton, IV et al.
2017/0000485 A1 1/2017 Shelton, IV et al.
2017/0007236 A1 1/2017 Shelton, IV et al.
2017/0007237 A1 1/2017 Yates et al.
2017/0007238 A1 1/2017 Yates et al.
2017/0007239 A1 1/2017 Shelton, IV
2017/0007241 A1 1/2017 Shelton, IV et al.
2017/0007242 A1 1/2017 Shelton, IV et al.
2017/0007243 A1 1/2017 Shelton, IV et al.
2017/0007244 A1 1/2017 Shelton, IV et al.
2017/0007245 A1 1/2017 Shelton, IV et al.
2017/0007246 A1 1/2017 Shelton, IV et al.
2017/0007247 A1 1/2017 Shelton, IV et al.
2017/0007248 A1 1/2017 Shelton, IV et al.
2017/0007249 A1 1/2017 Shelton, IV et al.
2017/0007250 A1 1/2017 Shelton, IV et al.
2017/0007251 A1 1/2017 Yates et al.
2017/0007254 A1 1/2017 Jaworek et al.
2017/0007255 A1 1/2017 Jaworek et al.
2017/0007340 A1 1/2017 Swensgard et al.
2017/0007341 A1 1/2017 Swensgard et al.
2017/0007347 A1 1/2017 Jaworek et al.
2017/0014125 A1 1/2017 Shelton, IV et al.
2017/0049444 A1 2/2017 Schellin et al.
2017/0049447 A1 2/2017 Barton et al.
2017/0049448 A1 2/2017 Widenhouse et al.
2017/0055986 A1 3/2017 Harris et al.
2017/0055989 A1 3/2017 Shelton, IV et al.
2017/0055997 A1 3/2017 Swayze et al.
2017/0055998 A1 3/2017 Baxter, III et al.
2017/0055999 A1 3/2017 Baxter, III et al.
2017/0056000 A1 3/2017 Nalagatla et al.
2017/0056001 A1 3/2017 Shelton, IV et al.
2017/0056002 A1 3/2017 Nalagatla et al.
2017/0056004 A1 3/2017 Shelton, IV et al.
2017/0056005 A1 3/2017 Shelton, IV et al.
2017/0056006 A1 3/2017 Shelton, IV et al.
2017/0056007 A1 3/2017 Eckert et al.
2017/0079640 A1 3/2017 Overmyer et al.
2017/0079642 A1 3/2017 Overmyer et al.
2017/0079643 A1 3/2017 Yates et al.
2017/0079644 A1 3/2017 Overmyer et al.
2017/0086823 A1 3/2017 Leimbach et al.
2017/0086827 A1 3/2017 Vendely et al.
2017/0086829 A1 3/2017 Vendely et al.
2017/0086830 A1 3/2017 Yates et al.
2017/0086831 A1 3/2017 Shelton, IV et al.
2017/0086832 A1 3/2017 Harris et al.
2017/0086835 A1 3/2017 Harris et al.
2017/0086836 A1 3/2017 Harris et al.
2017/0086837 A1 3/2017 Vendely et al.
2017/0086838 A1 3/2017 Harris et al.
2017/0086839 A1 3/2017 Vendely et al.
2017/0086840 A1 3/2017 Harris et al.
2017/0086841 A1 3/2017 Vendely et al.
2017/0086842 A1 3/2017 Shelton, IV et al.
2017/0086843 A1 3/2017 Vendely et al.
2017/0086844 A1 3/2017 Vendely et al.
2017/0086845 A1 3/2017 Vendely et al.
2017/0086936 A1 3/2017 Shelton, IV et al.
2017/0119390 A1 5/2017 Schellin et al.
2017/0119397 A1 5/2017 Harris et al.
2017/0128149 A1 5/2017 Heinrich et al.
2017/0135695 A1 5/2017 Shelton, IV et al.
2017/0135697 A1 5/2017 Mozdzierz et al.
2017/0150983 A1 6/2017 Ingmanson et al.
2017/0172672 A1 6/2017 Bailey et al.
2017/0182211 A1 6/2017 Raxworthy et al.
2017/0189018 A1 7/2017 Harris et al.
2017/0189019 A1 7/2017 Harris et al.
2017/0189020 A1 7/2017 Harris et al.
2017/0196558 A1 7/2017 Morgan et al.
2017/0196560 A1 7/2017 Leimbach et al.
2017/0196561 A1 7/2017 Shelton, IV et al.
2017/0196562 A1 7/2017 Shelton, IV et al.
2017/0196637 A1 7/2017 Shelton, IV et al.
2017/0196649 A1 7/2017 Yates et al.
2017/0202596 A1 7/2017 Shelton, IV et al.
2017/0209145 A1 7/2017 Swayze et al.
2017/0209146 A1 7/2017 Yates et al.
2017/0209226 A1 7/2017 Overmyer et al.
2017/0215881 A1 8/2017 Shelton, IV et al.
2017/0224330 A1 8/2017 Worthington et al.
2017/0224331 A1 8/2017 Worthington et al.
2017/0224332 A1 8/2017 Hunter et al.
2017/0224333 A1 8/2017 Hunter et al.
2017/0224334 A1 8/2017 Worthington et al.
2017/0224335 A1 8/2017 Weaner et al.
2017/0224336 A1 8/2017 Hunter et al.
2017/0224339 A1 8/2017 Huang et al.
2017/0224342 A1 8/2017 Worthington et al.
2017/0224343 A1 8/2017 Baxter, III et al.
2017/0231623 A1 8/2017 Shelton, IV et al.
2017/0231626 A1 8/2017 Shelton, IV et al.
2017/0231627 A1 8/2017 Shelton, IV et al.
2017/0231628 A1 8/2017 Shelton, IV et al.
2017/0238928 A1 8/2017 Morgan et al.
2017/0238929 A1 8/2017 Yates et al.
2017/0245952 A1 8/2017 Shelton, IV et al.
2017/0245953 A1 8/2017 Shelton, IV et al.
2017/0249431 A1 8/2017 Shelton, IV et al.
2017/0258469 A1 9/2017 Shelton, IV et al.
2017/0265856 A1 9/2017 Shelton, IV et al.
2017/0281167 A1 10/2017 Shelton, IV et al.
2017/0281180 A1 10/2017 Morgan et al.
2017/0290585 A1 10/2017 Shelton, IV et al.
2017/0296169 A1 10/2017 Yates et al.
2017/0296170 A1 10/2017 Shelton, IV et al.
2017/0296171 A1 10/2017 Shelton, IV et al.
2017/0296172 A1 10/2017 Harris et al.
2017/0296173 A1 10/2017 Shelton, IV et al.
2017/0296177 A1 10/2017 Harris et al.
2017/0296178 A1 10/2017 Miller et al.
2017/0296179 A1 10/2017 Shelton, IV et al.
2017/0296180 A1 10/2017 Harris et al.
2017/0296183 A1 10/2017 Shelton, IV et al.
2017/0296184 A1 10/2017 Harris et al.
2017/0296185 A1 10/2017 Swensgard et al.
2017/0296189 A1 10/2017 Vendely et al.
2017/0296190 A1 10/2017 Aronhalt et al.

(56) **References Cited**

U.S. PATENT DOCUMENTS

2017/0296191 A1 10/2017 Shelton, IV et al.
2017/0296213 A1 10/2017 Swensgard et al.
2017/0311944 A1 11/2017 Morgan et al.
2017/0311949 A1 11/2017 Shelton, IV
2017/0311950 A1 11/2017 Shelton, IV et al.
2017/0312040 A1 11/2017 Giordano et al.
2017/0312041 A1 11/2017 Giordano et al.
2017/0312042 A1 11/2017 Giordano et al.
2017/0319201 A1 11/2017 Morgan et al.
2017/0319207 A1 11/2017 Shelton, IV et al.
2017/0319209 A1 11/2017 Morgan et al.
2017/0319777 A1 11/2017 Shelton, IV et al.
2017/0333034 A1 11/2017 Morgan et al.
2017/0333035 A1 11/2017 Morgan et al.
2017/0333070 A1 11/2017 Laurent et al.
2017/0348043 A1 12/2017 Wang et al.
2017/0354415 A1 12/2017 Casasanta, Jr. et al.
2017/0360442 A1 12/2017 Shelton, IV et al.
2017/0367700 A1 12/2017 Leimbach et al.
2017/0367991 A1 12/2017 Widenhouse et al.
2018/0000483 A1 1/2018 Leimbach et al.
2018/0000545 A1 1/2018 Giordano et al.
2018/0008269 A1 1/2018 Moore et al.
2018/0008270 A1 1/2018 Moore et al.
2018/0008271 A1 1/2018 Moore et al.
2018/0008356 A1 1/2018 Giordano et al.
2018/0008357 A1 1/2018 Giordano et al.
2018/0028184 A1 2/2018 Shelton, IV et al.
2018/0028185 A1 2/2018 Shelton, IV et al.
2018/0042611 A1 2/2018 Swayze et al.
2018/0049824 A1 2/2018 Harris et al.
2018/0049883 A1 2/2018 Moskowitz et al.
2018/0055510 A1 3/2018 Schmid et al.
2018/0055513 A1 3/2018 Shelton, IV et al.
2018/0055524 A1 3/2018 Shelton, IV et al.
2018/0055525 A1 3/2018 Shelton, IV et al.
2018/0055526 A1 3/2018 Shelton, IV et al.
2018/0064437 A1 3/2018 Yates et al.
2018/0064440 A1 3/2018 Shelton, IV et al.
2018/0064441 A1 3/2018 Shelton, IV et al.
2018/0064442 A1 3/2018 Shelton, IV et al.
2018/0064443 A1 3/2018 Shelton, IV et al.
2018/0070939 A1 3/2018 Giordano et al.
2018/0070942 A1 3/2018 Shelton, IV et al.
2018/0070946 A1 3/2018 Shelton, IV et al.
2018/0074535 A1 3/2018 Shelton, IV et al.
2018/0078248 A1 3/2018 Swayze et al.
2018/0085116 A1 3/2018 Yates et al.
2018/0085117 A1 3/2018 Shelton, IV et al.
2018/0085123 A1 3/2018 Shelton, IV et al.
2018/0103952 A1 4/2018 Aronhalt et al.
2018/0103953 A1 4/2018 Shelton, IV et al.
2018/0103955 A1 4/2018 Shelton, IV et al.
2018/0110516 A1 4/2018 Baxter, III et al.
2018/0110518 A1 4/2018 Overmyer et al.
2018/0110519 A1 4/2018 Lytle, IV et al.
2018/0110520 A1 4/2018 Shelton, IV et al.
2018/0110521 A1 4/2018 Shelton, IV et al.
2018/0110522 A1 4/2018 Shelton, IV et al.
2018/0110523 A1 4/2018 Shelton, IV
2018/0110574 A1 4/2018 Shelton, IV et al.
2018/0110575 A1 4/2018 Shelton, IV et al.
2018/0116658 A1 5/2018 Aronhalt, IV et al.
2018/0116662 A1 5/2018 Shelton, IV et al.
2018/0116665 A1 5/2018 Hall et al.
2018/0125481 A1 5/2018 Yates et al.
2018/0125488 A1 5/2018 Morgan et al.
2018/0125489 A1 5/2018 Leimbach et al.
2018/0125590 A1 5/2018 Giordano et al.
2018/0126504 A1 5/2018 Shelton, IV et al.
2018/0132845 A1 5/2018 Schmid et al.
2018/0132850 A1 5/2018 Leimbach et al.
2018/0132851 A1 5/2018 Hall et al.
2018/0132952 A1 5/2018 Spivey et al.
2018/0133856 A1 5/2018 Shelton, IV et al.
2018/0140299 A1 5/2018 Weaner et al.
2018/0140368 A1 5/2018 Shelton, IV et al.
2018/0146960 A1 5/2018 Shelton, IV et al.
2018/0153542 A1 6/2018 Shelton, IV et al.
2018/0161034 A1 6/2018 Scheib et al.
2018/0168575 A1 6/2018 Simms et al.
2018/0168576 A1 6/2018 Hunter et al.
2018/0168577 A1 6/2018 Aronhalt et al.
2018/0168578 A1 6/2018 Aronhalt et al.
2018/0168579 A1 6/2018 Aronhalt et al.
2018/0168580 A1 6/2018 Hunter et al.
2018/0168581 A1 6/2018 Hunter et al.
2018/0168582 A1 6/2018 Swayze et al.
2018/0168583 A1 6/2018 Hunter et al.
2018/0168584 A1 6/2018 Harris et al.
2018/0168589 A1 6/2018 Swayze et al.
2018/0168590 A1 6/2018 Overmyer et al.
2018/0168591 A1 6/2018 Swayze et al.
2018/0168592 A1 6/2018 Overmyer et al.
2018/0168593 A1 6/2018 Overmyer et al.
2018/0168594 A1 6/2018 Shelton, IV et al.
2018/0168595 A1 6/2018 Overmyer et al.
2018/0168596 A1 6/2018 Beckman et al.
2018/0168597 A1 6/2018 Fanelli et al.
2018/0168598 A1 6/2018 Shelton, IV et al.
2018/0168599 A1 6/2018 Bakos et al.
2018/0168600 A1 6/2018 Shelton, IV et al.
2018/0168601 A1 6/2018 Bakos et al.
2018/0168602 A1 6/2018 Bakos et al.
2018/0168603 A1 6/2018 Morgan et al.
2018/0168604 A1 6/2018 Shelton, IV et al.
2018/0168605 A1 6/2018 Baber et al.
2018/0168606 A1 6/2018 Shelton, IV et al.
2018/0168607 A1 6/2018 Shelton, IV et al.
2018/0168608 A1 6/2018 Shelton, IV et al.
2018/0168609 A1 6/2018 Fanelli et al.
2018/0168610 A1 6/2018 Shelton, IV et al.
2018/0168611 A1 6/2018 Shelton, IV et al.
2018/0168612 A1 6/2018 Shelton, IV et al.
2018/0168613 A1 6/2018 Shelton, IV et al.
2018/0168614 A1 6/2018 Shelton, IV et al.
2018/0168615 A1 6/2018 Shelton, IV et al.
2018/0168618 A1 6/2018 Scott et al.
2018/0168619 A1 6/2018 Scott et al.
2018/0168620 A1 6/2018 Huang et al.
2018/0168621 A1 6/2018 Shelton, IV et al.
2018/0168622 A1 6/2018 Shelton, IV et al.
2018/0168623 A1 6/2018 Simms et al.
2018/0168624 A1 6/2018 Shelton, IV et al.
2018/0168625 A1 6/2018 Posada et al.
2018/0168626 A1 6/2018 Shelton, IV et al.
2018/0168627 A1 6/2018 Weaner et al.
2018/0168628 A1 6/2018 Hunter et al.
2018/0168629 A1 6/2018 Shelton, IV et al.
2018/0168630 A1 6/2018 Shelton, IV et al.
2018/0168631 A1 6/2018 Harris et al.
2018/0168632 A1 6/2018 Harris et al.
2018/0168633 A1 6/2018 Shelton, IV et al.
2018/0168634 A1 6/2018 Harris et al.
2018/0168635 A1 6/2018 Shelton, IV et al.
2018/0168636 A1 6/2018 Shelton, IV et al.
2018/0168637 A1 6/2018 Harris et al.
2018/0168638 A1 6/2018 Harris et al.
2018/0168639 A1 6/2018 Shelton, IV et al.
2018/0168640 A1 6/2018 Shelton, IV et al.
2018/0168641 A1 6/2018 Harris et al.
2018/0168642 A1 6/2018 Shelton, IV et al.
2018/0168644 A1 6/2018 Shelton, IV et al.
2018/0168645 A1 6/2018 Shelton, IV et al.
2018/0168646 A1 6/2018 Shelton, IV et al.
2018/0168649 A1 6/2018 Shelton, IV et al.
2018/0168651 A1 6/2018 Shelton, IV et al.
2018/0199940 A1 7/2018 Zergiebel et al.
2018/0206843 A1 7/2018 Yates et al.
2018/0206906 A1 7/2018 Moua et al.
2018/0214147 A1 8/2018 Merchant et al.
2018/0221046 A1 8/2018 Demmy et al.
2018/0221050 A1 8/2018 Kostrzewski et al.
2018/0228490 A1 8/2018 Richard et al.

(56) **References Cited**

U.S. PATENT DOCUMENTS

| | | | |
|---|---|---|---|
| 2018/0250001 | A1 | 9/2018 | Aronhalt et al. |
| 2018/0256184 | A1 | 9/2018 | Shelton, IV et al. |
| 2018/0256185 | A1 | 9/2018 | Shelton, IV et al. |
| 2018/0271520 | A1 | 9/2018 | Shelton, IV et al. |
| 2018/0280020 | A1 | 10/2018 | Hess et al. |
| 2018/0280021 | A1 | 10/2018 | Timm et al. |
| 2018/0280022 | A1 | 10/2018 | Timm et al. |
| 2018/0280023 | A1 | 10/2018 | Timm et al. |
| 2018/0296211 | A1 | 10/2018 | Timm et al. |
| 2018/0296215 | A1 | 10/2018 | Baxter, III et al. |
| 2018/0296216 | A1 | 10/2018 | Shelton, IV et al. |
| 2018/0296217 | A1 | 10/2018 | Moore et al. |
| 2018/0303478 | A1 | 10/2018 | Yates et al. |
| 2018/0303481 | A1 | 10/2018 | Shelton, IV et al. |
| 2018/0303482 | A1 | 10/2018 | Shelton, IV et al. |
| 2018/0310931 | A1 | 11/2018 | Hall et al. |
| 2018/0311002 | A1 | 11/2018 | Giordano et al. |

FOREIGN PATENT DOCUMENTS

| | | | |
|---|---|---|---|
| AU | 2011218702 | B2 | 6/2013 |
| AU | 2012200178 | B2 | 7/2013 |
| CA | 1015829 | A | 8/1977 |
| CA | 1125615 | A | 6/1982 |
| CA | 2458946 | A1 | 3/2003 |
| CA | 2477181 | A1 | 4/2004 |
| CA | 2512960 | A1 | 1/2006 |
| CA | 2514274 | A1 | 1/2006 |
| CA | 2639177 | A1 | 2/2009 |
| CA | 266487 | A1 | 11/2009 |
| CA | 2576347 | C | 8/2015 |
| CA | 2940510 | A1 | 8/2015 |
| CN | 86100996 | A | 9/1986 |
| CN | 1163558 | A | 10/1997 |
| CN | 2488482 | Y | 5/2002 |
| CN | 1424891 | A | 6/2003 |
| CN | 1523725 | A | 8/2004 |
| CN | 1545154 | A | 11/2004 |
| CN | 1634601 | A | 7/2005 |
| CN | 1636525 | A | 7/2005 |
| CN | 1636526 | A | 7/2005 |
| CN | 2716900 | Y | 8/2005 |
| CN | 2738962 | Y | 11/2005 |
| CN | 1726874 | A | 2/2006 |
| CN | 1726878 | A | 2/2006 |
| CN | 1868411 | A | 11/2006 |
| CN | 1915180 | A | 2/2007 |
| CN | 2868212 | Y | 2/2007 |
| CN | 1960679 | A | 5/2007 |
| CN | 101011286 | A | 8/2007 |
| CN | 200942099 | Y | 9/2007 |
| CN | 200991269 | Y | 12/2007 |
| CN | 101095621 | A | 1/2008 |
| CN | 101111196 | A | 1/2008 |
| CN | 201001747 | Y | 1/2008 |
| CN | 101137402 | A | 3/2008 |
| CN | 101143105 | A | 3/2008 |
| CN | 201029899 | Y | 3/2008 |
| CN | 101224122 | A | 7/2008 |
| CN | 101224124 | A | 7/2008 |
| CN | 101254126 | A | 9/2008 |
| CN | 101507620 | A | 8/2009 |
| CN | 101507622 | A | 8/2009 |
| CN | 101507623 | A | 8/2009 |
| CN | 101507625 | A | 8/2009 |
| CN | 101507628 | A | 8/2009 |
| CN | 101534724 | A | 9/2009 |
| CN | 101626731 | A | 1/2010 |
| CN | 101669833 | A | 3/2010 |
| CN | 101675898 | A | 3/2010 |
| CN | 101683280 | A | 3/2010 |
| CN | 101721236 | A | 6/2010 |
| CN | 101801284 | A | 8/2010 |
| CN | 101828940 | A | 9/2010 |
| CN | 101868203 | A | 10/2010 |
| CN | 101873834 | A | 10/2010 |
| CN | 101073509 | B | 12/2010 |
| CN | 101912285 | A | 12/2010 |
| CN | 101028205 | B | 1/2011 |
| CN | 101933824 | A | 1/2011 |
| CN | 101934098 | A | 1/2011 |
| CN | 201719298 | U | 1/2011 |
| CN | 102038531 | A | 5/2011 |
| CN | 102038532 | A | 5/2011 |
| CN | 101534722 | B | 6/2011 |
| CN | 201879759 | U | 6/2011 |
| CN | 101361666 | B | 8/2011 |
| CN | 201949071 | U | 8/2011 |
| CN | 101224119 | B | 9/2011 |
| CN | 101336835 | B | 9/2011 |
| CN | 102188270 | A | 9/2011 |
| CN | 101779977 | B | 12/2011 |
| CN | 101534723 | B | 1/2012 |
| CN | 101310680 | B | 4/2012 |
| CN | 101912284 | B | 7/2012 |
| CN | 202397539 | U | 8/2012 |
| CN | 202426586 | U | 9/2012 |
| CN | 101317782 | B | 10/2012 |
| CN | 202489990 | U | 10/2012 |
| CN | 101507639 | B | 11/2012 |
| CN | 101541251 | A | 11/2012 |
| CN | 102835977 | A | 12/2012 |
| CN | 101507633 | B | 2/2013 |
| CN | 101023879 | B | 3/2013 |
| CN | 101507624 | B | 3/2013 |
| CN | 101327137 | B | 6/2013 |
| CN | 101401736 | B | 6/2013 |
| CN | 101332110 | B | 7/2013 |
| CN | 101683281 | B | 1/2014 |
| CN | 103648408 | A | 3/2014 |
| CN | 203564285 | U | 4/2014 |
| CN | 203564287 | U | 4/2014 |
| CN | 203597997 | U | 5/2014 |
| CN | 103829983 | A | 6/2014 |
| CN | 103908313 | A | 7/2014 |
| CN | 203736251 | U | 7/2014 |
| CN | 103981635 | A | 8/2014 |
| CN | 102783741 | B | 10/2014 |
| CN | 102973300 | B | 10/2014 |
| CN | 102793571 | B | 12/2014 |
| CN | 104337556 | A | 2/2015 |
| CN | 102166129 | B | 3/2015 |
| CN | 102469995 | B | 3/2015 |
| CN | 102113902 | B | 4/2015 |
| CN | 102247177 | B | 2/2016 |
| CN | 103750872 | B | 5/2016 |
| DE | 273689 | C | 5/1914 |
| DE | 1775926 | A | 1/1972 |
| DE | 3036217 | A1 | 4/1982 |
| DE | 3212828 | A1 | 11/1982 |
| DE | 3210466 | A1 | 9/1983 |
| DE | 3709067 | A1 | 9/1988 |
| DE | 4228909 | A1 | 3/1994 |
| DE | 9412228 | U1 | 9/1994 |
| DE | 19509116 | A1 | 9/1996 |
| DE | 19534043 | A1 | 3/1997 |
| DE | 19707373 | C1 | 2/1998 |
| DE | 19851291 | A1 | 1/2000 |
| DE | 19924311 | A1 | 11/2000 |
| DE | 69328576 | T2 | 1/2001 |
| DE | 20016423 | U1 | 2/2001 |
| DE | 19941859 | A1 | 3/2001 |
| DE | 10052679 | A1 | 5/2001 |
| DE | 20112837 | U1 | 10/2001 |
| DE | 20121753 | U1 | 4/2003 |
| DE | 10314827 | B3 | 4/2004 |
| DE | 202004012389 | U1 | 9/2004 |
| DE | 10314072 | A1 | 10/2004 |
| DE | 202007003114 | U1 | 6/2007 |
| DE | 102010013150 | A1 | 9/2011 |
| EP | 0000756 | A1 | 2/1979 |
| EP | 0033633 | A2 | 8/1981 |
| EP | 0122046 | A1 | 10/1984 |
| EP | 0070230 | B1 | 4/1985 |

(56) **References Cited**

FOREIGN PATENT DOCUMENTS

| | | | |
|---|---|---|---|
| EP | 0156774 | A2 | 10/1985 |
| EP | 0072754 | B1 | 4/1986 |
| EP | 0033548 | B1 | 5/1986 |
| EP | 0077262 | B1 | 8/1986 |
| EP | 0189807 | A2 | 8/1986 |
| EP | 0212278 | A2 | 3/1987 |
| EP | 0129442 | B1 | 11/1987 |
| EP | 0255631 | A1 | 2/1988 |
| EP | 0276104 | A2 | 7/1988 |
| EP | 0178940 | B1 | 1/1991 |
| EP | 0178941 | B1 | 1/1991 |
| EP | 0169044 | B1 | 6/1991 |
| EP | 0248844 | B1 | 1/1993 |
| EP | 0539762 | A1 | 5/1993 |
| EP | 0541950 | A1 | 5/1993 |
| EP | 0545029 | A1 | 6/1993 |
| EP | 0548998 | A1 | 6/1993 |
| EP | 0379721 | B1 | 9/1993 |
| EP | 0277959 | B1 | 10/1993 |
| EP | 0233940 | B1 | 11/1993 |
| EP | 0261230 | B1 | 11/1993 |
| EP | 0324636 | B1 | 3/1994 |
| EP | 0591946 | A1 | 4/1994 |
| EP | 0593920 | A1 | 4/1994 |
| EP | 0594148 | A1 | 4/1994 |
| EP | 0427949 | B1 | 6/1994 |
| EP | 0523174 | B1 | 6/1994 |
| EP | 0600182 | A2 | 6/1994 |
| EP | 0310431 | B1 | 11/1994 |
| EP | 0375302 | B1 | 11/1994 |
| EP | 0376562 | B1 | 11/1994 |
| EP | 0623311 | A2 | 11/1994 |
| EP | 0630612 | A1 | 12/1994 |
| EP | 0630614 | A1 | 12/1994 |
| EP | 0634144 | A1 | 1/1995 |
| EP | 0639349 | A2 | 2/1995 |
| EP | 0646356 | A2 | 4/1995 |
| EP | 0646357 | A1 | 4/1995 |
| EP | 0505036 | B1 | 5/1995 |
| EP | 0653189 | A2 | 5/1995 |
| EP | 0669104 | A1 | 8/1995 |
| EP | 0387980 | B1 | 10/1995 |
| EP | 0511470 | B1 | 10/1995 |
| EP | 0674876 | A2 | 10/1995 |
| EP | 0676173 | B1 | 10/1995 |
| EP | 0679367 | A2 | 11/1995 |
| EP | 0392547 | B1 | 12/1995 |
| EP | 0685204 | A1 | 12/1995 |
| EP | 0686374 | A2 | 12/1995 |
| EP | 0364216 | B1 | 1/1996 |
| EP | 0699418 | A1 | 3/1996 |
| EP | 0702937 | A1 | 3/1996 |
| EP | 0488768 | B1 | 4/1996 |
| EP | 0705571 | A1 | 4/1996 |
| EP | 0528478 | B1 | 5/1996 |
| EP | 0711611 | A2 | 5/1996 |
| EP | 0541987 | B1 | 7/1996 |
| EP | 0667119 | B1 | 7/1996 |
| EP | 0737446 | A1 | 10/1996 |
| EP | 0741996 | B1 | 11/1996 |
| EP | 0748614 | A1 | 12/1996 |
| EP | 0708618 | B1 | 3/1997 |
| EP | 0770355 | A1 | 5/1997 |
| EP | 0503662 | B1 | 6/1997 |
| EP | 0447121 | B1 | 7/1997 |
| EP | 0621009 | B1 | 7/1997 |
| EP | 0625077 | B1 | 7/1997 |
| EP | 0633749 | B1 | 8/1997 |
| EP | 0710090 | B1 | 8/1997 |
| EP | 0578425 | B1 | 9/1997 |
| EP | 0623312 | B1 | 9/1997 |
| EP | 0621006 | B1 | 10/1997 |
| EP | 0625335 | B1 | 11/1997 |
| EP | 0552423 | B1 | 1/1998 |
| EP | 0592244 | B1 | 1/1998 |
| EP | 0648476 | B1 | 1/1998 |
| EP | 0649290 | B1 | 3/1998 |
| EP | 0598618 | B1 | 9/1998 |
| EP | 0678007 | B1 | 9/1998 |
| EP | 0869104 | A1 | 10/1998 |
| EP | 0603472 | B1 | 11/1998 |
| EP | 0605351 | B1 | 11/1998 |
| EP | 0878169 | A1 | 11/1998 |
| EP | 0879742 | A1 | 11/1998 |
| EP | 0695144 | B1 | 12/1998 |
| EP | 0722296 | B1 | 12/1998 |
| EP | 0760230 | B1 | 2/1999 |
| EP | 0623316 | B1 | 3/1999 |
| EP | 0650701 | B1 | 3/1999 |
| EP | 0537572 | B1 | 6/1999 |
| EP | 0923907 | A1 | 6/1999 |
| EP | 0640317 | B1 | 9/1999 |
| EP | 0843906 | B1 | 3/2000 |
| EP | 0552050 | B1 | 5/2000 |
| EP | 0833592 | B1 | 5/2000 |
| EP | 0832605 | B1 | 6/2000 |
| EP | 0484677 | B2 | 7/2000 |
| EP | 0830094 | B1 | 9/2000 |
| EP | 1034747 | A1 | 9/2000 |
| EP | 1034748 | A1 | 9/2000 |
| EP | 0726632 | B1 | 10/2000 |
| EP | 0694290 | B1 | 11/2000 |
| EP | 1050278 | A1 | 11/2000 |
| EP | 1053719 | A1 | 11/2000 |
| EP | 1053720 | A1 | 11/2000 |
| EP | 1055399 | A1 | 11/2000 |
| EP | 1055400 | A1 | 11/2000 |
| EP | 1058177 | A1 | 12/2000 |
| EP | 1080694 | A1 | 3/2001 |
| EP | 1090592 | A1 | 4/2001 |
| EP | 1095627 | A1 | 5/2001 |
| EP | 0806914 | B1 | 9/2001 |
| EP | 0768840 | B1 | 12/2001 |
| EP | 0908152 | B1 | 1/2002 |
| EP | 0717959 | B1 | 2/2002 |
| EP | 0872213 | B1 | 5/2002 |
| EP | 0862386 | B1 | 6/2002 |
| EP | 0949886 | B1 | 9/2002 |
| EP | 1238634 | A2 | 9/2002 |
| EP | 0858295 | B1 | 12/2002 |
| EP | 0656188 | B1 | 1/2003 |
| EP | 0717960 | B1 | 2/2003 |
| EP | 1284120 | A1 | 2/2003 |
| EP | 1287788 | A1 | 3/2003 |
| EP | 0717966 | B1 | 4/2003 |
| EP | 0717967 | B1 | 5/2003 |
| EP | 0869742 | B1 | 5/2003 |
| EP | 0829235 | B1 | 6/2003 |
| EP | 0887046 | B1 | 7/2003 |
| EP | 1323384 | A2 | 7/2003 |
| EP | 0852480 | B1 | 8/2003 |
| EP | 0891154 | B1 | 9/2003 |
| EP | 0813843 | B1 | 10/2003 |
| EP | 0873089 | B1 | 10/2003 |
| EP | 0856326 | B1 | 11/2003 |
| EP | 1374788 | A1 | 1/2004 |
| EP | 0814712 | B1 | 2/2004 |
| EP | 1402837 | A1 | 3/2004 |
| EP | 0705570 | B1 | 4/2004 |
| EP | 0959784 | B1 | 4/2004 |
| EP | 1407719 | A2 | 4/2004 |
| EP | 1411626 | A2 | 4/2004 |
| EP | 1086713 | B1 | 5/2004 |
| EP | 0996378 | B1 | 6/2004 |
| EP | 1426012 | A1 | 6/2004 |
| EP | 0833593 | B2 | 7/2004 |
| EP | 1442694 | A1 | 8/2004 |
| EP | 0888749 | B1 | 9/2004 |
| EP | 0959786 | B1 | 9/2004 |
| EP | 1453432 | A2 | 9/2004 |
| EP | 1459695 | A1 | 9/2004 |
| EP | 1254636 | B1 | 10/2004 |
| EP | 1473819 | A1 | 11/2004 |
| EP | 1477119 | A1 | 11/2004 |

(56) **References Cited**

FOREIGN PATENT DOCUMENTS

| | | | |
|---|---|---|---|
| EP | 1479345 | A1 | 11/2004 |
| EP | 1479347 | A1 | 11/2004 |
| EP | 1479348 | A1 | 11/2004 |
| EP | 0754437 | B2 | 12/2004 |
| EP | 1025807 | B1 | 12/2004 |
| EP | 1001710 | B1 | 1/2005 |
| EP | 1496805 | A2 | 1/2005 |
| EP | 1256318 | B1 | 2/2005 |
| EP | 1520521 | A1 | 4/2005 |
| EP | 1520522 | A1 | 4/2005 |
| EP | 1520523 | A1 | 4/2005 |
| EP | 1520525 | A1 | 4/2005 |
| EP | 1522264 | A1 | 4/2005 |
| EP | 1523942 | A2 | 4/2005 |
| EP | 1550408 | A1 | 7/2005 |
| EP | 1557129 | A1 | 7/2005 |
| EP | 1064883 | B1 | 8/2005 |
| EP | 1067876 | B1 | 8/2005 |
| EP | 0870473 | B1 | 9/2005 |
| EP | 1157666 | B1 | 9/2005 |
| EP | 0880338 | B1 | 10/2005 |
| EP | 1158917 | B1 | 11/2005 |
| EP | 1344498 | B1 | 11/2005 |
| EP | 0906764 | B1 | 12/2005 |
| EP | 1330989 | B1 | 12/2005 |
| EP | 0771176 | B2 | 1/2006 |
| EP | 1621138 | A2 | 2/2006 |
| EP | 1621139 | A2 | 2/2006 |
| EP | 1621141 | A2 | 2/2006 |
| EP | 1621143 | A2 | 2/2006 |
| EP | 1621145 | A2 | 2/2006 |
| EP | 1621151 | A2 | 2/2006 |
| EP | 1034746 | B1 | 3/2006 |
| EP | 1201196 | B1 | 3/2006 |
| EP | 1632191 | A2 | 3/2006 |
| EP | 1647231 | A1 | 4/2006 |
| EP | 1065981 | B1 | 5/2006 |
| EP | 1082944 | B1 | 5/2006 |
| EP | 1230899 | B1 | 5/2006 |
| EP | 1652481 | A2 | 5/2006 |
| EP | 1382303 | B1 | 6/2006 |
| EP | 1253866 | B1 | 7/2006 |
| EP | 1676539 | A1 | 7/2006 |
| EP | 1032318 | B1 | 8/2006 |
| EP | 1045672 | B1 | 8/2006 |
| EP | 1617768 | B1 | 8/2006 |
| EP | 1693015 | A2 | 8/2006 |
| EP | 1400214 | B1 | 9/2006 |
| EP | 1702567 | A2 | 9/2006 |
| EP | 1129665 | B1 | 11/2006 |
| EP | 1400206 | B1 | 11/2006 |
| EP | 1721568 | A1 | 11/2006 |
| EP | 1723914 | A1 | 11/2006 |
| EP | 1256317 | B1 | 12/2006 |
| EP | 1285633 | B1 | 12/2006 |
| EP | 1728473 | A1 | 12/2006 |
| EP | 1736105 | A1 | 12/2006 |
| EP | 1011494 | B1 | 1/2007 |
| EP | 1479346 | B1 | 1/2007 |
| EP | 1484024 | B1 | 1/2007 |
| EP | 1749485 | A1 | 2/2007 |
| EP | 1754445 | A2 | 2/2007 |
| EP | 1759812 | A1 | 3/2007 |
| EP | 1767157 | A1 | 3/2007 |
| EP | 1767163 | A1 | 3/2007 |
| EP | 1563792 | B1 | 4/2007 |
| EP | 1769756 | A1 | 4/2007 |
| EP | 1769758 | A1 | 4/2007 |
| EP | 1581128 | B1 | 5/2007 |
| EP | 1780825 | A1 | 5/2007 |
| EP | 1785097 | A2 | 5/2007 |
| EP | 1790293 | A2 | 5/2007 |
| EP | 1790294 | A1 | 5/2007 |
| EP | 1563793 | B1 | 6/2007 |
| EP | 1791473 | A2 | 6/2007 |
| EP | 1800610 | A1 | 6/2007 |
| EP | 1300117 | B1 | 8/2007 |
| EP | 1813199 | A1 | 8/2007 |
| EP | 1813200 | A2 | 8/2007 |
| EP | 1813201 | A1 | 8/2007 |
| EP | 1813202 | A1 | 8/2007 |
| EP | 1813203 | A2 | 8/2007 |
| EP | 1813207 | A1 | 8/2007 |
| EP | 1813209 | A1 | 8/2007 |
| EP | 1815950 | A1 | 8/2007 |
| EP | 1330991 | B1 | 9/2007 |
| EP | 1837041 | A1 | 9/2007 |
| EP | 0922435 | B1 | 10/2007 |
| EP | 1487359 | B1 | 10/2007 |
| EP | 1599146 | B1 | 10/2007 |
| EP | 1839596 | A1 | 10/2007 |
| EP | 1679096 | B1 | 11/2007 |
| EP | 1857057 | A2 | 11/2007 |
| EP | 1402821 | B1 | 12/2007 |
| EP | 1872727 | A1 | 1/2008 |
| EP | 1550410 | B1 | 2/2008 |
| EP | 1671593 | B1 | 2/2008 |
| EP | 1897502 | A1 | 3/2008 |
| EP | 1611856 | B1 | 4/2008 |
| EP | 1908417 | A2 | 4/2008 |
| EP | 1917929 | A1 | 5/2008 |
| EP | 1330201 | B1 | 6/2008 |
| EP | 1702568 | B1 | 7/2008 |
| EP | 1943955 | A2 | 7/2008 |
| EP | 1943957 | A2 | 7/2008 |
| EP | 1943959 | A1 | 7/2008 |
| EP | 1943962 | A2 | 7/2008 |
| EP | 1943964 | A1 | 7/2008 |
| EP | 1943976 | A2 | 7/2008 |
| EP | 1593337 | B1 | 8/2008 |
| EP | 1970014 | A1 | 9/2008 |
| EP | 1974678 | A2 | 10/2008 |
| EP | 1980213 | A2 | 10/2008 |
| EP | 1980214 | A2 | 10/2008 |
| EP | 1759645 | B1 | 11/2008 |
| EP | 1987780 | A2 | 11/2008 |
| EP | 1990014 | A2 | 11/2008 |
| EP | 1992296 | A1 | 11/2008 |
| EP | 1552795 | B1 | 12/2008 |
| EP | 1693008 | B1 | 12/2008 |
| EP | 1759640 | B1 | 12/2008 |
| EP | 1997439 | A2 | 12/2008 |
| EP | 2000101 | A2 | 12/2008 |
| EP | 2000102 | A2 | 12/2008 |
| EP | 2005894 | A2 | 12/2008 |
| EP | 2005897 | A2 | 12/2008 |
| EP | 2005901 | A1 | 12/2008 |
| EP | 2008595 | A2 | 12/2008 |
| EP | 2025293 | A1 | 2/2009 |
| EP | 1736104 | B1 | 3/2009 |
| EP | 1749486 | B1 | 3/2009 |
| EP | 1782743 | B1 | 3/2009 |
| EP | 2039302 | A2 | 3/2009 |
| EP | 2039308 | A2 | 3/2009 |
| EP | 2039316 | A2 | 3/2009 |
| EP | 1721576 | B1 | 4/2009 |
| EP | 1733686 | B1 | 4/2009 |
| EP | 2044890 | A1 | 4/2009 |
| EP | 2055243 | A2 | 5/2009 |
| EP | 1550409 | B1 | 6/2009 |
| EP | 1550413 | B1 | 6/2009 |
| EP | 1719461 | B1 | 6/2009 |
| EP | 1834594 | B1 | 6/2009 |
| EP | 1709911 | B1 | 7/2009 |
| EP | 2077093 | A2 | 7/2009 |
| EP | 1745748 | B1 | 8/2009 |
| EP | 2090231 | A1 | 8/2009 |
| EP | 2090237 | A1 | 8/2009 |
| EP | 2090241 | A1 | 8/2009 |
| EP | 2090245 | A1 | 8/2009 |
| EP | 2090254 | A1 | 8/2009 |
| EP | 2090256 | A2 | 8/2009 |
| EP | 2095777 | A2 | 9/2009 |
| EP | 2098170 | A2 | 9/2009 |

(56) **References Cited**

FOREIGN PATENT DOCUMENTS

| | | | |
|---|---|---|---|
| EP | 2100562 | A2 | 9/2009 |
| EP | 2110082 | A1 | 10/2009 |
| EP | 2110083 | A2 | 10/2009 |
| EP | 2110084 | A2 | 10/2009 |
| EP | 2111803 | A2 | 10/2009 |
| EP | 1813208 | B1 | 11/2009 |
| EP | 1908426 | B1 | 11/2009 |
| EP | 2116195 | A1 | 11/2009 |
| EP | 2116196 | A2 | 11/2009 |
| EP | 2116197 | A2 | 11/2009 |
| EP | 1607050 | B1 | 12/2009 |
| EP | 1762190 | B8 | 12/2009 |
| EP | 1815804 | B1 | 12/2009 |
| EP | 1875870 | B1 | 12/2009 |
| EP | 1878395 | B1 | 1/2010 |
| EP | 2151204 | A1 | 2/2010 |
| EP | 1813211 | B1 | 3/2010 |
| EP | 2165654 | A1 | 3/2010 |
| EP | 2165656 | A2 | 3/2010 |
| EP | 2165660 | A2 | 3/2010 |
| EP | 2165663 | A2 | 3/2010 |
| EP | 2165664 | A2 | 3/2010 |
| EP | 1566150 | B1 | 4/2010 |
| EP | 1813206 | B1 | 4/2010 |
| EP | 2184014 | A2 | 5/2010 |
| EP | 1769754 | B1 | 6/2010 |
| EP | 1854416 | B1 | 6/2010 |
| EP | 1911408 | B1 | 6/2010 |
| EP | 2198787 | A1 | 6/2010 |
| EP | 2214610 | A1 | 8/2010 |
| EP | 2218409 | A1 | 8/2010 |
| EP | 1647286 | B1 | 9/2010 |
| EP | 1825821 | B1 | 9/2010 |
| EP | 1535565 | B1 | 10/2010 |
| EP | 1702570 | B1 | 10/2010 |
| EP | 1785098 | B1 | 10/2010 |
| EP | 2005896 | B1 | 10/2010 |
| EP | 2030578 | B1 | 11/2010 |
| EP | 2036505 | B1 | 11/2010 |
| EP | 2245993 | A2 | 11/2010 |
| EP | 2245994 | A1 | 11/2010 |
| EP | 2253280 | A1 | 11/2010 |
| EP | 1627605 | B1 | 12/2010 |
| EP | 2027811 | B1 | 12/2010 |
| EP | 2130498 | B1 | 12/2010 |
| EP | 2258282 | A2 | 12/2010 |
| EP | 2263568 | A2 | 12/2010 |
| EP | 1994890 | B1 | 1/2011 |
| EP | 2005900 | B1 | 1/2011 |
| EP | 2277667 | A1 | 1/2011 |
| EP | 2283780 | A2 | 2/2011 |
| EP | 2286738 | A2 | 2/2011 |
| EP | 1494595 | B1 | 3/2011 |
| EP | 1690502 | B1 | 3/2011 |
| EP | 1884201 | B1 | 3/2011 |
| EP | 2292153 | A1 | 3/2011 |
| EP | 1769755 | B1 | 4/2011 |
| EP | 2090240 | B1 | 4/2011 |
| EP | 2305135 | A1 | 4/2011 |
| EP | 2308388 | A1 | 4/2011 |
| EP | 2314254 | A2 | 4/2011 |
| EP | 2316345 | A1 | 5/2011 |
| EP | 2316366 | A2 | 5/2011 |
| EP | 2319443 | A1 | 5/2011 |
| EP | 2324776 | A2 | 5/2011 |
| EP | 1813205 | B1 | 6/2011 |
| EP | 2042107 | B1 | 6/2011 |
| EP | 2090243 | B1 | 6/2011 |
| EP | 2329773 | A1 | 6/2011 |
| EP | 2090239 | B1 | 7/2011 |
| EP | 2340771 | A2 | 7/2011 |
| EP | 1728475 | B1 | 8/2011 |
| EP | 2353545 | A1 | 8/2011 |
| EP | 2361562 | A1 | 8/2011 |
| EP | 2377472 | A1 | 10/2011 |
| EP | 1836986 | B1 | 11/2011 |
| EP | 1908414 | B1 | 11/2011 |
| EP | 2153781 | B1 | 11/2011 |
| EP | 2387943 | A2 | 11/2011 |
| EP | 2389928 | A2 | 11/2011 |
| EP | 1847225 | B1 | 12/2011 |
| EP | 2397079 | A1 | 12/2011 |
| EP | 2399538 | A2 | 12/2011 |
| EP | 1785102 | B1 | 1/2012 |
| EP | 1316290 | B1 | 2/2012 |
| EP | 1962711 | B1 | 2/2012 |
| EP | 2415416 | A1 | 2/2012 |
| EP | 2090253 | B1 | 3/2012 |
| EP | 2430986 | A2 | 3/2012 |
| EP | 1347638 | B1 | 5/2012 |
| EP | 1943956 | B1 | 5/2012 |
| EP | 2446834 | A1 | 5/2012 |
| EP | 2455007 | A2 | 5/2012 |
| EP | 2457519 | A1 | 5/2012 |
| EP | 2462878 | A1 | 6/2012 |
| EP | 2462880 | A2 | 6/2012 |
| EP | 1813204 | B1 | 7/2012 |
| EP | 2189121 | B1 | 7/2012 |
| EP | 2248475 | B1 | 7/2012 |
| EP | 2478845 | A2 | 7/2012 |
| EP | 2005895 | B1 | 8/2012 |
| EP | 2090248 | B1 | 8/2012 |
| EP | 2481359 | A1 | 8/2012 |
| EP | 2484304 | A2 | 8/2012 |
| EP | 2486860 | A2 | 8/2012 |
| EP | 2486862 | A2 | 8/2012 |
| EP | 2486868 | A2 | 8/2012 |
| EP | 1908412 | B1 | 9/2012 |
| EP | 1935351 | B1 | 9/2012 |
| EP | 2497431 | A1 | 9/2012 |
| EP | 1550412 | B2 | 10/2012 |
| EP | 1616549 | B1 | 10/2012 |
| EP | 2030579 | B1 | 10/2012 |
| EP | 2090252 | B1 | 10/2012 |
| EP | 2517637 | A1 | 10/2012 |
| EP | 2517638 | A1 | 10/2012 |
| EP | 2517642 | A2 | 10/2012 |
| EP | 2517645 | A2 | 10/2012 |
| EP | 2517649 | A2 | 10/2012 |
| EP | 2517651 | A2 | 10/2012 |
| EP | 2526877 | A1 | 11/2012 |
| EP | 2526883 | A1 | 11/2012 |
| EP | 1884206 | B1 | 3/2013 |
| EP | 2286735 | B1 | 3/2013 |
| EP | 2090238 | B1 | 4/2013 |
| EP | 1806103 | B1 | 5/2013 |
| EP | 2586380 | A1 | 5/2013 |
| EP | 2586383 | A2 | 5/2013 |
| EP | 2606812 | A1 | 6/2013 |
| EP | 2606834 | A2 | 6/2013 |
| EP | 1982657 | B1 | 7/2013 |
| EP | 2614782 | A2 | 7/2013 |
| EP | 2617369 | A1 | 7/2013 |
| EP | 2620117 | A1 | 7/2013 |
| EP | 2090234 | B1 | 9/2013 |
| EP | 2633830 | A1 | 9/2013 |
| EP | 2090244 | B1 | 10/2013 |
| EP | 2644124 | A1 | 10/2013 |
| EP | 2644209 | A2 | 10/2013 |
| EP | 2649948 | A1 | 10/2013 |
| EP | 2649949 | A1 | 10/2013 |
| EP | 1997438 | B1 | 11/2013 |
| EP | 2684529 | A2 | 1/2014 |
| EP | 2687164 | A2 | 1/2014 |
| EP | 2700367 | A1 | 2/2014 |
| EP | 2713902 | A1 | 4/2014 |
| EP | 1772105 | B1 | 5/2014 |
| EP | 2743042 | A2 | 6/2014 |
| EP | 2759267 | A2 | 7/2014 |
| EP | 2764826 | A1 | 8/2014 |
| EP | 2764827 | A2 | 8/2014 |
| EP | 2767243 | A2 | 8/2014 |
| EP | 2772206 | A2 | 9/2014 |
| EP | 2772209 | A1 | 9/2014 |

(56) **References Cited**

FOREIGN PATENT DOCUMENTS

| | | | |
|---|---|---|---|
| EP | 2777520 | A1 | 9/2014 |
| EP | 2777524 | A2 | 9/2014 |
| EP | 2777528 | A2 | 9/2014 |
| EP | 2777537 | A1 | 9/2014 |
| EP | 2777538 | A2 | 9/2014 |
| EP | 2786714 | A2 | 10/2014 |
| EP | 2792313 | A2 | 10/2014 |
| EP | 2803324 | A2 | 11/2014 |
| EP | 2815704 | A1 | 12/2014 |
| EP | 2446835 | B1 | 1/2015 |
| EP | 2842500 | A1 | 3/2015 |
| EP | 2845545 | A1 | 3/2015 |
| EP | 1943960 | B1 | 4/2015 |
| EP | 2090255 | B1 | 4/2015 |
| EP | 2853220 | A1 | 4/2015 |
| EP | 2923647 | A2 | 9/2015 |
| EP | 2923653 | A2 | 9/2015 |
| EP | 2923660 | A2 | 9/2015 |
| EP | 2932913 | A1 | 10/2015 |
| EP | 2944270 | A1 | 11/2015 |
| EP | 1774914 | B1 | 12/2015 |
| EP | 2090235 | B1 | 4/2016 |
| EP | 2823773 | B1 | 4/2016 |
| EP | 2131750 | B1 | 5/2016 |
| EP | 2298220 | B1 | 6/2016 |
| EP | 2510891 | B1 | 6/2016 |
| EP | 1915957 | B1 | 8/2016 |
| EP | 2296559 | B1 | 8/2016 |
| EP | 2586379 | B1 | 8/2016 |
| EP | 2777533 | B1 | 10/2016 |
| EP | 2364651 | B1 | 11/2016 |
| EP | 2747235 | B1 | 11/2016 |
| EP | 2116192 | B1 | 3/2017 |
| EP | 2789299 | B1 | 5/2017 |
| EP | 2311386 | B1 | 6/2017 |
| EP | 2839787 | B1 | 6/2017 |
| EP | 2745782 | B1 | 10/2017 |
| EP | 3363378 | A1 | 8/2018 |
| ES | 2396594 | T3 | 2/2013 |
| FR | 459743 | A | 11/1913 |
| FR | 999646 | A | 2/1952 |
| FR | 1112936 | A | 3/1956 |
| FR | 2452275 | B1 | 4/1983 |
| FR | 2598905 | A1 | 11/1987 |
| FR | 2689749 | B1 | 7/1994 |
| FR | 2765794 | A1 | 1/1999 |
| FR | 2815842 | A1 | 5/2002 |
| GB | 939929 | A | 10/1963 |
| GB | 1210522 | A | 10/1970 |
| GB | 1217159 | A | 12/1970 |
| GB | 1339394 | A | 12/1973 |
| GB | 2024012 | A | 1/1980 |
| GB | 2109241 | A | 6/1983 |
| GB | 2090534 | B | 6/1984 |
| GB | 2272159 | A | 5/1994 |
| GB | 2284242 | A | 5/1995 |
| GB | 2286435 | A | 8/1995 |
| GB | 2336214 | A | 10/1999 |
| GB | 2425903 | A | 11/2006 |
| GB | 2426391 | A | 11/2006 |
| GB | 2423199 | B | 5/2009 |
| GB | 2509523 | A | 7/2014 |
| GR | 930100110 | A | 11/1993 |
| JP | S4711908 | Y1 | 5/1972 |
| JP | S5033988 | U | 4/1975 |
| JP | S56112235 | A | 9/1981 |
| JP | S58500053 | A | 1/1983 |
| JP | S58501360 | A | 8/1983 |
| JP | S59174920 | A | 10/1984 |
| JP | S60100955 | A | 6/1985 |
| JP | S60212152 | A | 10/1985 |
| JP | S6198249 | A | 5/1986 |
| JP | S61502036 | A | 9/1986 |
| JP | S62170011 | U | 10/1987 |
| JP | S6359764 | A | 3/1988 |
| JP | S63147499 | A | 6/1988 |
| JP | S63203149 | A | 8/1988 |
| JP | S63270040 | A | 11/1988 |
| JP | H0129503 | B2 | 6/1989 |
| JP | H02279149 | A | 11/1990 |
| JP | H0312126 | A | 1/1991 |
| JP | H0318354 | A | 1/1991 |
| JP | H0378514 | U | 8/1991 |
| JP | H0385009 | U | 8/1991 |
| JP | H04215747 | A | 8/1992 |
| JP | H04131860 | U | 12/1992 |
| JP | H0584252 | A | 4/1993 |
| JP | H05123325 | A | 5/1993 |
| JP | H05212039 | A | 8/1993 |
| JP | H 05226945 | A | 9/1993 |
| JP | H067357 | A | 1/1994 |
| JP | H0630945 | A | 2/1994 |
| JP | H0654857 | A | 3/1994 |
| JP | H0663054 | A | 3/1994 |
| JP | H0626812 | U | 4/1994 |
| JP | H06121798 | A | 5/1994 |
| JP | H06125913 | A | 5/1994 |
| JP | H06197901 | A | 7/1994 |
| JP | H06237937 | A | 8/1994 |
| JP | H06327684 | A | 11/1994 |
| JP | H079622 | U | 2/1995 |
| JP | H0731623 | A | 2/1995 |
| JP | H0747070 | A | 2/1995 |
| JP | H0751273 | A | 2/1995 |
| JP | H07124166 | A | 5/1995 |
| JP | H07163573 | A | 6/1995 |
| JP | H07163574 | A | 6/1995 |
| JP | H07171163 | A | 7/1995 |
| JP | H07255735 | A | 10/1995 |
| JP | H07285089 | A | 10/1995 |
| JP | H07299074 | A | 11/1995 |
| JP | H0833641 | A | 2/1996 |
| JP | H0833642 | A | 2/1996 |
| JP | H08164141 | A | 6/1996 |
| JP | H08173437 | A | 7/1996 |
| JP | H08182684 | A | 7/1996 |
| JP | H08215201 | A | 8/1996 |
| JP | H08507708 | A | 8/1996 |
| JP | H08229050 | A | 9/1996 |
| JP | H08289895 | A | 11/1996 |
| JP | H08336540 | A | 12/1996 |
| JP | H08336544 | A | 12/1996 |
| JP | H09501081 | A | 2/1997 |
| JP | H09501577 | A | 2/1997 |
| JP | H09164144 | A | 6/1997 |
| JP | H09-323068 | A | 12/1997 |
| JP | H10113352 | A | 5/1998 |
| JP | H10118090 | A | 5/1998 |
| JP | H10-200699 | A | 7/1998 |
| JP | H 10296660 | A | 11/1998 |
| JP | H10512465 | A | 12/1998 |
| JP | H10512469 | A | 12/1998 |
| JP | 2000014632 | A | 1/2000 |
| JP | 2000033071 | A | 2/2000 |
| JP | 2000112002 | A | 4/2000 |
| JP | 3056672 | B2 | 6/2000 |
| JP | 2000166932 | A | 6/2000 |
| JP | 2000171730 | A | 6/2000 |
| JP | 2000287987 | A | 10/2000 |
| JP | 2000325303 | A | 11/2000 |
| JP | 2001037763 | A | 2/2001 |
| JP | 2001046384 | A | 2/2001 |
| JP | 2001-087272 | A | 4/2001 |
| JP | 2001514541 | A | 9/2001 |
| JP | 2001276091 | A | 10/2001 |
| JP | 2001286477 | A | 10/2001 |
| JP | 2001517473 | A | 10/2001 |
| JP | 2002051974 | A | 2/2002 |
| JP | 2002054903 | A | 2/2002 |
| JP | 2002085415 | A | 3/2002 |
| JP | 2002143078 | A | 5/2002 |
| JP | 2002204801 | A | 7/2002 |
| JP | 2002528161 | A | 9/2002 |
| JP | 2002314298 | A | 10/2002 |

(56) **References Cited**

FOREIGN PATENT DOCUMENTS

| | | | |
|---|---|---|---|
| JP | 2002369820 | A | 12/2002 |
| JP | 2002542186 | A | 12/2002 |
| JP | 2003000603 | A | 1/2003 |
| JP | 2003500153 | A | 1/2003 |
| JP | 2003504104 | A | 2/2003 |
| JP | 2003135473 | A | 5/2003 |
| JP | 2003148903 | A | 5/2003 |
| JP | 2003164066 | A | 6/2003 |
| JP | 2003521301 | A | 7/2003 |
| JP | 2003521304 | A | 7/2003 |
| JP | 2003523251 | A | 8/2003 |
| JP | 2003523254 | A | 8/2003 |
| JP | 2003524431 | A | 8/2003 |
| JP | 3442423 | B2 | 9/2003 |
| JP | 2003300416 | A | 10/2003 |
| JP | 2004147701 | A | 5/2004 |
| JP | 2004162035 | A | 6/2004 |
| JP | 2004229976 | A | 8/2004 |
| JP | 2004524076 | A | 8/2004 |
| JP | 2004531280 | A | 10/2004 |
| JP | 2004532084 | A | 10/2004 |
| JP | 2004532676 | A | 10/2004 |
| JP | 2004-535217 | A | 11/2004 |
| JP | 2004329624 | A | 11/2004 |
| JP | 2004337617 | A | 12/2004 |
| JP | 2004344662 | A | 12/2004 |
| JP | 2004344663 | A | 12/2004 |
| JP | 2005013573 | A | 1/2005 |
| JP | 2005028147 | A | 2/2005 |
| JP | 2005028148 | A | 2/2005 |
| JP | 2005028149 | A | 2/2005 |
| JP | 2005505309 | A | 2/2005 |
| JP | 2005505322 | A | 2/2005 |
| JP | 2005505334 | A | 2/2005 |
| JP | 2005080702 | A | 3/2005 |
| JP | 2005103280 | A | 4/2005 |
| JP | 2005103281 | A | 4/2005 |
| JP | 2005103293 | A | 4/2005 |
| JP | 2005511131 | A | 4/2005 |
| JP | 2005511137 | A | 4/2005 |
| JP | 2005131163 | A | 5/2005 |
| JP | 2005131164 | A | 5/2005 |
| JP | 2005131173 | A | 5/2005 |
| JP | 2005131211 | A | 5/2005 |
| JP | 2005131212 | A | 5/2005 |
| JP | 2005137423 | A | 6/2005 |
| JP | 2005137919 | A | 6/2005 |
| JP | 2005144183 | A | 6/2005 |
| JP | 2005152416 | A | 6/2005 |
| JP | 2005516714 | A | 6/2005 |
| JP | 2005187954 | A | 7/2005 |
| JP | 2005521109 | A | 7/2005 |
| JP | 2005523105 | A | 8/2005 |
| JP | 2005524474 | A | 8/2005 |
| JP | 2005296412 | A | 10/2005 |
| JP | 2005529675 | A | 10/2005 |
| JP | 2005529677 | A | 10/2005 |
| JP | 2005328882 | A | 12/2005 |
| JP | 2005335432 | A | 12/2005 |
| JP | 2005342267 | A | 12/2005 |
| JP | 2006034975 | A | 2/2006 |
| JP | 2006034977 | A | 2/2006 |
| JP | 2006034978 | A | 2/2006 |
| JP | 2006034980 | A | 2/2006 |
| JP | 2006043451 | A | 2/2006 |
| JP | 2006506106 | A | 2/2006 |
| JP | 2006510879 | A | 3/2006 |
| JP | 3791856 | B2 | 6/2006 |
| JP | 2006187649 | A | 7/2006 |
| JP | 2006218228 | A | 8/2006 |
| JP | 2006218297 | A | 8/2006 |
| JP | 2006223872 | A | 8/2006 |
| JP | 2006281405 | A | 10/2006 |
| JP | 2006289064 | A | 10/2006 |
| JP | 2006334412 | A | 12/2006 |
| JP | 2006334417 | A | 12/2006 |
| JP | 2006346445 | A | 12/2006 |
| JP | 2007000634 | A | 1/2007 |
| JP | 2007050253 | A | 3/2007 |
| JP | 2007061628 | A | 3/2007 |
| JP | 3906843 | B2 | 4/2007 |
| JP | 2007083051 | A | 4/2007 |
| JP | 2007098130 | A | 4/2007 |
| JP | 2007105481 | A | 4/2007 |
| JP | 2007117725 | A | 5/2007 |
| JP | 2007130471 | A | 5/2007 |
| JP | 2007130479 | A | 5/2007 |
| JP | 3934161 | B2 | 6/2007 |
| JP | 2007203047 | A | 8/2007 |
| JP | 2007203049 | A | 8/2007 |
| JP | 2007203051 | A | 8/2007 |
| JP | 2007203055 | A | 8/2007 |
| JP | 2007203057 | A | 8/2007 |
| JP | 2007524435 | A | 8/2007 |
| JP | 2007222615 | A | 9/2007 |
| JP | 2007229448 | A | 9/2007 |
| JP | 2007526026 | A | 9/2007 |
| JP | 4001860 | B2 | 10/2007 |
| JP | 2007252916 | A | 10/2007 |
| JP | 2007307373 | A | 11/2007 |
| JP | 2007325922 | A | 12/2007 |
| JP | 2008068073 | A | 3/2008 |
| JP | 2008510515 | A | 4/2008 |
| JP | 2008516669 | A | 5/2008 |
| JP | 2008528203 | A | 7/2008 |
| JP | 2008-220032 | A | 9/2008 |
| JP | 2008206967 | A | 9/2008 |
| JP | 2008212637 | A | 9/2008 |
| JP | 2008212638 | A | 9/2008 |
| JP | 2008212640 | A | 9/2008 |
| JP | 2008220956 | A | 9/2008 |
| JP | 2008237881 | A | 10/2008 |
| JP | 2008259860 | A | 10/2008 |
| JP | 2008264535 | A | 11/2008 |
| JP | 2008283459 | A | 11/2008 |
| JP | 2008307393 | A | 12/2008 |
| JP | 2009000531 | A | 1/2009 |
| JP | 2009006137 | A | 1/2009 |
| JP | 2009502351 | A | 1/2009 |
| JP | 2009502352 | A | 1/2009 |
| JP | 2009022742 | A | 2/2009 |
| JP | 2009506799 | A | 2/2009 |
| JP | 2009507526 | A | 2/2009 |
| JP | 2009072595 | A | 4/2009 |
| JP | 2009072599 | A | 4/2009 |
| JP | 2009090113 | A | 4/2009 |
| JP | 2009106752 | A | 5/2009 |
| JP | 2009189821 | A | 8/2009 |
| JP | 2009189823 | A | 8/2009 |
| JP | 2009189836 | A | 8/2009 |
| JP | 2009189837 | A | 8/2009 |
| JP | 2009189838 | A | 8/2009 |
| JP | 2009189846 | A | 8/2009 |
| JP | 2009189847 | A | 8/2009 |
| JP | 2009201998 | A | 9/2009 |
| JP | 2009207260 | A | 9/2009 |
| JP | 2009226028 | A | 10/2009 |
| JP | 2009536082 | A | 10/2009 |
| JP | 2009261944 | A | 11/2009 |
| JP | 2009268908 | A | 11/2009 |
| JP | 2009538684 | A | 11/2009 |
| JP | 2009539420 | A | 11/2009 |
| JP | 2009291604 | A | 12/2009 |
| JP | 2010504808 | A | 2/2010 |
| JP | 2010504809 | A | 2/2010 |
| JP | 2010504813 | A | 2/2010 |
| JP | 2010504846 | A | 2/2010 |
| JP | 2010505524 | A | 2/2010 |
| JP | 2010069307 | A | 4/2010 |
| JP | 2010069310 | A | 4/2010 |
| JP | 2010075694 | A | 4/2010 |
| JP | 2010075695 | A | 4/2010 |
| JP | 2010088876 | A | 4/2010 |
| JP | 2010094514 | A | 4/2010 |

(56) **References Cited**

FOREIGN PATENT DOCUMENTS

| | | | |
|---|---|---|---|
| JP | 2010098844 | A | 4/2010 |
| JP | 4461008 | B2 | 5/2010 |
| JP | 2010-520025 | A | 6/2010 |
| JP | 2010-148879 | A | 7/2010 |
| JP | 2010142636 | A | 7/2010 |
| JP | 4549018 | B2 | 9/2010 |
| JP | 2010214166 | A | 9/2010 |
| JP | 2010-240429 | A | 10/2010 |
| JP | 2010240411 | A | 10/2010 |
| JP | 2010246948 | A | 11/2010 |
| JP | 2010-540041 | A | 12/2010 |
| JP | 2010279690 | A | 12/2010 |
| JP | 2010540192 | A | 12/2010 |
| JP | 2011005260 | A | 1/2011 |
| JP | 2011504391 | A | 2/2011 |
| JP | 2011509786 | A | 3/2011 |
| JP | 2011072574 | A | 4/2011 |
| JP | 2011072797 | A | 4/2011 |
| JP | 2011078763 | A | 4/2011 |
| JP | 2011-115594 | A | 6/2011 |
| JP | 2011-520564 | A | 7/2011 |
| JP | 4722849 | B2 | 7/2011 |
| JP | 4783373 | B2 | 9/2011 |
| JP | 2011524199 | A | 9/2011 |
| JP | 2011251156 | A | 12/2011 |
| JP | 2012040398 | A | 3/2012 |
| JP | 2012507356 | A | 3/2012 |
| JP | 2012517289 | A | 8/2012 |
| JP | 5140421 | B2 | 2/2013 |
| JP | 5154710 | B1 | 2/2013 |
| JP | 5162595 | B2 | 3/2013 |
| JP | 2013517891 | A | 5/2013 |
| JP | 2013526342 | A | 6/2013 |
| JP | 2013128791 | A | 7/2013 |
| JP | 5333899 | B2 | 11/2013 |
| JP | 2014121599 | A | 7/2014 |
| JP | 2016-512057 | A | 4/2016 |
| KR | 20100110134 | A | 10/2010 |
| KR | 20110003229 | A | 1/2011 |
| RU | 1814161 | C | 5/1993 |
| RU | 2008830 | C1 | 3/1994 |
| RU | 2052979 | C1 | 1/1996 |
| RU | 2066128 | C1 | 9/1996 |
| RU | 2098025 | C1 | 12/1997 |
| RU | 2141279 | C1 | 11/1999 |
| RU | 2144791 | C1 | 1/2000 |
| RU | 2161450 | C1 | 1/2001 |
| RU | 2181566 | C2 | 4/2002 |
| RU | 2187249 | C2 | 8/2002 |
| RU | 2189091 | C2 | 9/2002 |
| RU | 32984 | U1 | 10/2003 |
| RU | 2225170 | C2 | 3/2004 |
| RU | 42750 | U1 | 12/2004 |
| RU | 61114 | U1 | 2/2007 |
| RU | 61122 | U1 | 2/2007 |
| RU | 2007103563 | A | 8/2008 |
| SU | 189517 | A | 1/1967 |
| SU | 297156 | A | 5/1971 |
| SU | 328636 | A | 9/1972 |
| SU | 511939 | A1 | 4/1976 |
| SU | 674747 | A1 | 7/1979 |
| SU | 728848 | A1 | 4/1980 |
| SU | 886900 | A1 | 12/1981 |
| SU | 1009439 | A | 4/1983 |
| SU | 1022703 | A1 | 6/1983 |
| SU | 1271497 | A1 | 11/1986 |
| SU | 1333319 | A2 | 8/1987 |
| SU | 1377052 | A1 | 2/1988 |
| SU | 1377053 | A1 | 2/1988 |
| SU | 1443874 | A1 | 12/1988 |
| SU | 1509051 | A1 | 9/1989 |
| SU | 1561964 | A1 | 5/1990 |
| SU | 1708312 | A1 | 1/1992 |
| SU | 1722476 | A1 | 3/1992 |
| SU | 1752361 | A1 | 8/1992 |
| SU | 1814161 | A1 | 5/1993 |
| WO | WO-8202824 | A1 | 9/1982 |
| WO | WO-8602254 | A1 | 4/1986 |
| WO | WO-9115157 | A1 | 10/1991 |
| WO | WO-9220295 | A1 | 11/1992 |
| WO | WO-9221300 | A1 | 12/1992 |
| WO | WO-9308755 | A1 | 5/1993 |
| WO | WO-9313718 | A1 | 7/1993 |
| WO | WO-9314690 | A1 | 8/1993 |
| WO | WO-9315648 | A1 | 8/1993 |
| WO | WO-9315850 | A1 | 8/1993 |
| WO | WO-9319681 | A1 | 10/1993 |
| WO | WO-9400060 | A1 | 1/1994 |
| WO | WO-9411057 | A1 | 5/1994 |
| WO | WO-94/14129 | A1 | 6/1994 |
| WO | WO-9412108 | A1 | 6/1994 |
| WO | WO-9417737 | A1 | 8/1994 |
| WO | WO-9418893 | A1 | 9/1994 |
| WO | WO-9420030 | A1 | 9/1994 |
| WO | WO-9422378 | A1 | 10/1994 |
| WO | WO-9423659 | A1 | 10/1994 |
| WO | WO-9424943 | A1 | 11/1994 |
| WO | WO-9424947 | A1 | 11/1994 |
| WO | WO-9502369 | A1 | 1/1995 |
| WO | WO-9503743 | A1 | 2/1995 |
| WO | WO-9506817 | A1 | 3/1995 |
| WO | WO-9509576 | A1 | 4/1995 |
| WO | WO-9509577 | A1 | 4/1995 |
| WO | WO-9514436 | A1 | 6/1995 |
| WO | WO-9517855 | A1 | 7/1995 |
| WO | WO-9518383 | A1 | 7/1995 |
| WO | WO-9518572 | A1 | 7/1995 |
| WO | WO-9519739 | A1 | 7/1995 |
| WO | WO-9520360 | A1 | 8/1995 |
| WO | WO-9523557 | A1 | 9/1995 |
| WO | WO-9524865 | A1 | 9/1995 |
| WO | WO-9525471 | A3 | 9/1995 |
| WO | WO-9526562 | A1 | 10/1995 |
| WO | WO-9529639 | A1 | 11/1995 |
| WO | WO-9604858 | A1 | 2/1996 |
| WO | WO-9618344 | A2 | 6/1996 |
| WO | WO-9619151 | A1 | 6/1996 |
| WO | WO-9619152 | A1 | 6/1996 |
| WO | WO-9620652 | A1 | 7/1996 |
| WO | WO-9621119 | A1 | 7/1996 |
| WO | WO-9622055 | A1 | 7/1996 |
| WO | WO-9623448 | A1 | 8/1996 |
| WO | WO-9624301 | A1 | 8/1996 |
| WO | WO-9627337 | A1 | 9/1996 |
| WO | WO-9631155 | A1 | 10/1996 |
| WO | WO-9635464 | A1 | 11/1996 |
| WO | WO-9639085 | A1 | 12/1996 |
| WO | WO-9639086 | A1 | 12/1996 |
| WO | WO-9639087 | A1 | 12/1996 |
| WO | WO-9639088 | A1 | 12/1996 |
| WO | WO-9639089 | A1 | 12/1996 |
| WO | WO-9700646 | A1 | 1/1997 |
| WO | WO-9700647 | A1 | 1/1997 |
| WO | WO-9701989 | A1 | 1/1997 |
| WO | WO-9706582 | A1 | 2/1997 |
| WO | WO-9710763 | A1 | 3/1997 |
| WO | WO-9710764 | A1 | 3/1997 |
| WO | WO-9711648 | A2 | 4/1997 |
| WO | WO-9711649 | A1 | 4/1997 |
| WO | WO-9715237 | A1 | 5/1997 |
| WO | WO-9724073 | A1 | 7/1997 |
| WO | WO-9724993 | A1 | 7/1997 |
| WO | WO-9730644 | A1 | 8/1997 |
| WO | WO-9730659 | A1 | 8/1997 |
| WO | WO-9734533 | A1 | 9/1997 |
| WO | WO-9737598 | A1 | 10/1997 |
| WO | WO-9739688 | A2 | 10/1997 |
| WO | WO-9741767 | A2 | 11/1997 |
| WO | WO-9801080 | A1 | 1/1998 |
| WO | WO-9817180 | A1 | 4/1998 |
| WO | WO-9822154 | A2 | 5/1998 |
| WO | WO-9827880 | A1 | 7/1998 |
| WO | WO-9830153 | A1 | 7/1998 |
| WO | WO-9847436 | A1 | 10/1998 |

(56) **References Cited**

FOREIGN PATENT DOCUMENTS

| | | | |
|---|---|---|---|
| WO | WO-9858589 | A1 | 12/1998 |
| WO | WO-9902090 | A1 | 1/1999 |
| WO | WO-9903407 | A1 | 1/1999 |
| WO | WO-9903408 | A1 | 1/1999 |
| WO | WO-9903409 | A1 | 1/1999 |
| WO | WO-9912483 | A1 | 3/1999 |
| WO | WO-9912487 | A1 | 3/1999 |
| WO | WO-9912488 | A1 | 3/1999 |
| WO | WO-9915086 | A1 | 4/1999 |
| WO | WO-9915091 | A1 | 4/1999 |
| WO | WO-9923933 | A2 | 5/1999 |
| WO | WO-9923959 | A1 | 5/1999 |
| WO | WO-9925261 | A1 | 5/1999 |
| WO | WO-9929244 | A1 | 6/1999 |
| WO | WO-9934744 | A1 | 7/1999 |
| WO | WO-9945849 | A1 | 9/1999 |
| WO | WO-9948430 | A1 | 9/1999 |
| WO | WO-9951158 | A1 | 10/1999 |
| WO | WO-0024322 | A1 | 5/2000 |
| WO | WO-0024330 | A1 | 5/2000 |
| WO | WO-0033755 | A1 | 6/2000 |
| WO | WO-0041638 | A1 | 7/2000 |
| WO | WO-0048506 | A1 | 8/2000 |
| WO | WO-0053112 | A2 | 9/2000 |
| WO | WO-0054653 | A1 | 9/2000 |
| WO | WO-0057796 | A1 | 10/2000 |
| WO | WO-0064365 | A1 | 11/2000 |
| WO | WO-0072762 | A1 | 12/2000 |
| WO | WO-0072765 | A1 | 12/2000 |
| WO | WO-0078222 | A1 | 12/2000 |
| WO | WO-0103587 | A1 | 1/2001 |
| WO | WO-0105702 | A1 | 1/2001 |
| WO | WO-0110482 | A1 | 2/2001 |
| WO | WO-0135845 | A1 | 5/2001 |
| WO | WO-0154594 | A1 | 8/2001 |
| WO | WO-0158371 | A1 | 8/2001 |
| WO | WO-0162158 | A2 | 8/2001 |
| WO | WO-0162161 | A1 | 8/2001 |
| WO | WO-0162162 | A1 | 8/2001 |
| WO | WO-0162163 | A1 | 8/2001 |
| WO | WO-0162164 | A2 | 8/2001 |
| WO | WO-0162169 | A2 | 8/2001 |
| WO | WO-0178605 | A2 | 10/2001 |
| WO | WO-0180757 | A2 | 11/2001 |
| WO | WO-0191646 | A1 | 12/2001 |
| WO | WO-0200121 | A1 | 1/2002 |
| WO | WO-0207608 | A2 | 1/2002 |
| WO | WO-0207618 | A1 | 1/2002 |
| WO | WO-0217799 | A1 | 3/2002 |
| WO | WO-0219920 | A1 | 3/2002 |
| WO | WO-0219932 | A1 | 3/2002 |
| WO | WO-0226143 | A1 | 4/2002 |
| WO | WO-0230297 | A2 | 4/2002 |
| WO | WO-0232322 | A2 | 4/2002 |
| WO | WO-0236028 | A1 | 5/2002 |
| WO | WO-0243571 | A2 | 6/2002 |
| WO | WO-02058568 | A1 | 8/2002 |
| WO | WO-02060328 | A1 | 8/2002 |
| WO | WO-02065933 | A2 | 8/2002 |
| WO | WO-02067785 | A2 | 9/2002 |
| WO | WO-02080781 | A2 | 10/2002 |
| WO | WO-02085218 | A2 | 10/2002 |
| WO | WO-02087586 | A1 | 11/2002 |
| WO | WO-02098302 | A1 | 12/2002 |
| WO | WO-03000138 | A2 | 1/2003 |
| WO | WO-03001329 | A2 | 1/2003 |
| WO | WO-03001986 | A2 | 1/2003 |
| WO | WO-03013363 | A1 | 2/2003 |
| WO | WO-03013372 | A2 | 2/2003 |
| WO | WO-03015604 | A2 | 2/2003 |
| WO | WO-03020106 | A2 | 3/2003 |
| WO | WO-03020139 | A2 | 3/2003 |
| WO | WO-03024339 | A1 | 3/2003 |
| WO | WO-03030743 | A2 | 4/2003 |
| WO | WO-03037193 | A1 | 5/2003 |
| WO | WO-03055402 | A1 | 7/2003 |
| WO | WO-03057048 | A1 | 7/2003 |
| WO | WO-03057058 | A1 | 7/2003 |
| WO | WO-03063694 | A1 | 8/2003 |
| WO | WO-03077769 | A1 | 9/2003 |
| WO | WO-03079911 | A1 | 10/2003 |
| WO | WO-03082126 | A1 | 10/2003 |
| WO | WO-03086206 | A1 | 10/2003 |
| WO | WO-03088845 | A2 | 10/2003 |
| WO | WO 2003/094747 | A1 | 11/2003 |
| WO | WO-03047436 | A3 | 11/2003 |
| WO | WO-03090630 | A2 | 11/2003 |
| WO | WO-03094743 | A1 | 11/2003 |
| WO | WO-03094745 | A1 | 11/2003 |
| WO | WO-03094746 | A1 | 11/2003 |
| WO | WO-03101313 | A1 | 12/2003 |
| WO | WO-03105698 | A2 | 12/2003 |
| WO | WO-03105702 | A2 | 12/2003 |
| WO | WO-2004004578 | A1 | 1/2004 |
| WO | WO-2004006980 | A2 | 1/2004 |
| WO | WO-2004011037 | A2 | 2/2004 |
| WO | WO-2004014238 | A2 | 2/2004 |
| WO | WO-03079909 | A3 | 3/2004 |
| WO | WO-2004019769 | A1 | 3/2004 |
| WO | WO-2004019803 | A1 | 3/2004 |
| WO | WO-2004021868 | A2 | 3/2004 |
| WO | WO-2004028585 | A2 | 4/2004 |
| WO | WO-2004030554 | A1 | 4/2004 |
| WO | WO-2004032754 | A2 | 4/2004 |
| WO | WO-2004032760 | A2 | 4/2004 |
| WO | WO-2004032762 | A1 | 4/2004 |
| WO | WO-2004032763 | A2 | 4/2004 |
| WO | WO-2004032783 | A1 | 4/2004 |
| WO | WO-2004034875 | A2 | 4/2004 |
| WO | WO-2004047626 | A1 | 6/2004 |
| WO | WO-2004047653 | A2 | 6/2004 |
| WO | WO-2004049956 | A2 | 6/2004 |
| WO | WO-2004050971 | A2 | 6/2004 |
| WO | WO-2004052426 | A2 | 6/2004 |
| WO | WO-2004056276 | A1 | 7/2004 |
| WO | WO-2004056277 | A1 | 7/2004 |
| WO | WO-2004062516 | A1 | 7/2004 |
| WO | WO-2004064600 | A2 | 8/2004 |
| WO | WO-2004078050 | A2 | 9/2004 |
| WO | WO-2004078051 | A2 | 9/2004 |
| WO | WO-2004078236 | A2 | 9/2004 |
| WO | WO-2004086987 | A1 | 10/2004 |
| WO | WO-2004096015 | A2 | 11/2004 |
| WO | WO-2004096057 | A2 | 11/2004 |
| WO | WO-2004103157 | A2 | 12/2004 |
| WO | WO-2004105593 | A1 | 12/2004 |
| WO | WO-2004105621 | A1 | 12/2004 |
| WO | WO-2004112618 | A2 | 12/2004 |
| WO | WO-2004112652 | A2 | 12/2004 |
| WO | WO-2005027983 | A2 | 3/2005 |
| WO | WO-2005037329 | A2 | 4/2005 |
| WO | WO-2005042041 | A1 | 5/2005 |
| WO | WO-2005044078 | A2 | 5/2005 |
| WO | WO-2005048809 | A1 | 6/2005 |
| WO | WO-2005055846 | A1 | 6/2005 |
| WO | WO-2005072634 | A2 | 8/2005 |
| WO | WO-2005078892 | A1 | 8/2005 |
| WO | WO-2005079675 | A2 | 9/2005 |
| WO | WO-2005087128 | A1 | 9/2005 |
| WO | WO-2005096954 | A2 | 10/2005 |
| WO | WO-2005110243 | A2 | 11/2005 |
| WO | WO-2005112806 | A2 | 12/2005 |
| WO | WO-2005112808 | A1 | 12/2005 |
| WO | WO-2005115251 | A1 | 12/2005 |
| WO | WO-2005115253 | A2 | 12/2005 |
| WO | WO-2005117735 | A1 | 12/2005 |
| WO | WO-2005122936 | A1 | 12/2005 |
| WO | WO-2006/026520 | A2 | 3/2006 |
| WO | WO-2006023486 | A1 | 3/2006 |
| WO | WO-2006023578 | A2 | 3/2006 |
| WO | WO-2006027014 | A1 | 3/2006 |
| WO | WO-2006028314 | A1 | 3/2006 |
| WO | WO-2006044490 | A2 | 4/2006 |
| WO | WO-2006044581 | A2 | 4/2006 |

(56) **References Cited**

FOREIGN PATENT DOCUMENTS

| | | | |
|---|---|---|---|
| WO | WO-2006044810 | A2 | 4/2006 |
| WO | WO-2006049852 | A2 | 5/2006 |
| WO | WO-2006050360 | A1 | 5/2006 |
| WO | WO-2006051252 | A1 | 5/2006 |
| WO | WO-2006/057702 | A2 | 6/2006 |
| WO | WO-2006059067 | A1 | 6/2006 |
| WO | WO-2006/073581 | A2 | 7/2006 |
| WO | WO-2006083748 | A1 | 8/2006 |
| WO | WO-2006085389 | A1 | 8/2006 |
| WO | WO-2006092563 | A1 | 9/2006 |
| WO | WO-2006092565 | A1 | 9/2006 |
| WO | WO-2006115958 | A1 | 11/2006 |
| WO | WO-2006125940 | A1 | 11/2006 |
| WO | WO-2006132992 | A2 | 12/2006 |
| WO | WO-2007002180 | A2 | 1/2007 |
| WO | WO-2007014355 | A2 | 2/2007 |
| WO | WO-2007016290 | A2 | 2/2007 |
| WO | WO-2007018898 | A2 | 2/2007 |
| WO | WO-2007034161 | A2 | 3/2007 |
| WO | WO-2007051000 | A2 | 5/2007 |
| WO | WO-2007059233 | A2 | 5/2007 |
| WO | WO-2007074430 | A1 | 7/2007 |
| WO | WO-2007089603 | A2 | 8/2007 |
| WO | WO-2007098220 | A2 | 8/2007 |
| WO | WO-2007121579 | A1 | 11/2007 |
| WO | WO-2007129121 | A1 | 11/2007 |
| WO | WO-2007131110 | A2 | 11/2007 |
| WO | WO-2007137304 | A2 | 11/2007 |
| WO | WO-2007139734 | A2 | 12/2007 |
| WO | WO-2007142625 | A2 | 12/2007 |
| WO | WO-2007145825 | A2 | 12/2007 |
| WO | WO-2007146987 | A2 | 12/2007 |
| WO | WO-2007147439 | A1 | 12/2007 |
| WO | WO-2008020964 | A2 | 2/2008 |
| WO | WO-2008021687 | A1 | 2/2008 |
| WO | WO-2008021969 | A2 | 2/2008 |
| WO | WO-2008027972 | A1 | 3/2008 |
| WO | WO-2008039237 | A1 | 4/2008 |
| WO | WO-2008039249 | A1 | 4/2008 |
| WO | WO-2008039270 | A1 | 4/2008 |
| WO | WO-2008045383 | A2 | 4/2008 |
| WO | WO-2008/061566 | A1 | 5/2008 |
| WO | WO-2008057281 | A2 | 5/2008 |
| WO | WO-2008070763 | A1 | 6/2008 |
| WO | WO-2008080148 | A2 | 7/2008 |
| WO | WO-2008089404 | A2 | 7/2008 |
| WO | WO-2008101080 | A1 | 8/2008 |
| WO | WO-2008101228 | A2 | 8/2008 |
| WO | WO-2008103797 | A2 | 8/2008 |
| WO | WO-2008109123 | A2 | 9/2008 |
| WO | WO-2008109125 | A1 | 9/2008 |
| WO | WO-2008112912 | A2 | 9/2008 |
| WO | WO-2008118728 | A1 | 10/2008 |
| WO | WO-2008118928 | A2 | 10/2008 |
| WO | WO-2008124748 | A1 | 10/2008 |
| WO | WO-2008131357 | A1 | 10/2008 |
| WO | WO-2009005969 | A2 | 1/2009 |
| WO | WO-2009022614 | A1 | 2/2009 |
| WO | WO-2009023851 | A1 | 2/2009 |
| WO | WO-2009033057 | A2 | 3/2009 |
| WO | WO-2009039506 | A1 | 3/2009 |
| WO | WO-2009046394 | A1 | 4/2009 |
| WO | WO-2009066105 | A1 | 5/2009 |
| WO | WO-2009067649 | A2 | 5/2009 |
| WO | WO-2009091497 | A2 | 7/2009 |
| WO | WO-2009120944 | A2 | 10/2009 |
| WO | WO-2009137761 | A2 | 11/2009 |
| WO | WO-2009143092 | A1 | 11/2009 |
| WO | WO-2009143331 | A1 | 11/2009 |
| WO | WO-2009150650 | A2 | 12/2009 |
| WO | WO-2009152307 | A1 | 12/2009 |
| WO | WO-2010028332 | A2 | 3/2010 |
| WO | WO-2010030434 | A1 | 3/2010 |
| WO | WO-2010045425 | A1 | 4/2010 |
| WO | WO-2010050771 | A2 | 5/2010 |
| WO | WO-2010054404 | A1 | 5/2010 |
| WO | WO-2010056714 | A1 | 5/2010 |
| WO | WO-2010063795 | A1 | 6/2010 |
| WO | WO-2010090940 | A1 | 8/2010 |
| WO | WO-2010093333 | A1 | 8/2010 |
| WO | WO-2010098871 | A2 | 9/2010 |
| WO | WO-2010134913 | A1 | 11/2010 |
| WO | WO-2011008672 | A2 | 1/2011 |
| WO | WO-2011013103 | A1 | 2/2011 |
| WO | WO-2011044343 | A2 | 4/2011 |
| WO | WO-2011056458 | A1 | 5/2011 |
| WO | WO-2011060311 | A2 | 5/2011 |
| WO | WO-2011084969 | A1 | 7/2011 |
| WO | WO-2011127137 | A1 | 10/2011 |
| WO | WO-2012006306 | A2 | 1/2012 |
| WO | WO-2012009431 | A2 | 1/2012 |
| WO | WO-2012/013577 | A1 | 2/2012 |
| WO | WO-2012021671 | A1 | 2/2012 |
| WO | WO-2012040438 | A1 | 3/2012 |
| WO | WO-2012044551 | A1 | 4/2012 |
| WO | WO-2012044554 | A1 | 4/2012 |
| WO | WO-2012044597 | A1 | 4/2012 |
| WO | WO-2012044606 | A2 | 4/2012 |
| WO | WO-2012044820 | A1 | 4/2012 |
| WO | WO-2012044844 | A2 | 4/2012 |
| WO | WO-2012044853 | A1 | 4/2012 |
| WO | WO-2012044854 | A1 | 4/2012 |
| WO | WO-2012058213 | A2 | 5/2012 |
| WO | WO-2012068156 | A2 | 5/2012 |
| WO | WO-2012109760 | A1 | 8/2012 |
| WO | WO-2012127462 | A1 | 9/2012 |
| WO | WO-2012135705 | A1 | 10/2012 |
| WO | WO-2012143913 | A2 | 10/2012 |
| WO | WO-2012148667 | A2 | 11/2012 |
| WO | WO-2012148668 | A2 | 11/2012 |
| WO | WO-2012148703 | A2 | 11/2012 |
| WO | WO-2012160163 | A1 | 11/2012 |
| WO | WO-2012166503 | A1 | 12/2012 |
| WO | WO-2013009252 | A2 | 1/2013 |
| WO | WO-2013009699 | A2 | 1/2013 |
| WO | WO-2013023114 | A1 | 2/2013 |
| WO | WO-2013036409 | A1 | 3/2013 |
| WO | WO-2013043707 | A2 | 3/2013 |
| WO | WO-2013043717 | A1 | 3/2013 |
| WO | WO-2013043721 | A2 | 3/2013 |
| WO | WO-2013062978 | A2 | 5/2013 |
| WO | WO-2013116869 | A1 | 8/2013 |
| WO | WO-2013148762 | A2 | 10/2013 |
| WO | WO-2013151888 | A1 | 10/2013 |
| WO | WO-2013167427 | A1 | 11/2013 |
| WO | WO-2013188130 | A1 | 12/2013 |
| WO | WO-2014/008289 | A2 | 1/2014 |
| WO | WO-2014004199 | A1 | 1/2014 |
| WO | WO-2014004294 | A2 | 1/2014 |
| WO | WO-2014/113438 | A1 | 7/2014 |
| WO | WO-2014/134034 | A2 | 9/2014 |
| WO | WO-2014/172213 | A2 | 10/2014 |
| WO | WO-2014158882 | A2 | 10/2014 |
| WO | WO-2015/032797 | A1 | 3/2015 |
| WO | WO-2015/148136 | A1 | 10/2015 |
| WO | WO-2015148141 | A1 | 10/2015 |
| WO | WO-2015153642 | A1 | 10/2015 |
| WO | WO-2015187107 | A1 | 12/2015 |

OTHER PUBLICATIONS

"Indian Standard: Automotive Vehicles—Brakes and Braking Systems (IS 11852-1:2001)", Mar. 1, 2001.

Allegro MicroSystems, LLC, Automotive Full Bridge MOSFET Driver, A3941-DS, Rev. 5, 21 pages, http://www.allegromicro.com/~/media/Files/Datasheets/A3941-Datasheet.ashx?la=en.

Anonymous, Analog Devices Wiki, Chapter 11: The Current Mirror, Aug. 20, 2017, 22 pages. https://wiki.analog.com/university/courses/electronics/text/chapter-11?rev=1503222341.

Anonymous: "Sense & Control Application Note Current Sensing Using Linear Hall Sensors," Feb. 3, 2009, pp. 1-18. Retrieved from the Internet: URL: http://www.infineon.com/dgdl/Current_Sensing_

(56) **References Cited**

OTHER PUBLICATIONS

Rev.1.1.pdf?fileId=db3a304332d040720132d939503e5f17 [retrieved on Oct. 18, 2016].
ASTM procedure D2240-00, "Standard Test Method for Rubber Property-Durometer Hardness," (Published Aug. 2000).
ASTM procedure D2240-05, "Standard Test Method for Rubber Property-Durometer Hardness," (Published Apr. 2010).
B.R. Coolman, DVM, MS et al., "Comparison of Skin Staples With Sutures for Anastomosis of the Small Intestine in Dogs," Abstract; http://www.blackwell-synergy.com/doi/abs/10.1053/jvet.2000.7539?cookieSet=1&journalCode=vsu which redirects to http://www3.interscience.wiley.com/journal/119040681/abstract?CRETRY=1&SRETRY=0; [online] accessed: Sep. 22, 2008 (2 pages).
Brar et al., "Investigation of the mechanical and degradation properties of Mg—Sr and Mg—Zn—Sr alloys for use as potential biodegradable implant materials," J. Mech. Behavior of Biomed. Mater. 7 (2012) pp. 87-95.
Breedveld et al., "A New, Easily Miniaturized Sterrable Endoscope," IEEE Engineering in Medicine and Biology Magazine (Nov./Dec. 2005).
Byrne et al., "Molecular Imprinting Within Hydrogels," Advanced Drug Delivery Reviews, 54 (2002) pp. 149-161.
C.C. Thompson et al., "Peroral Endoscopic Reduction of Dilated Gastrojejunal Anastomosis After Roux-en-Y Gastric Bypass: A Possible New Option for Patients with Weight Regain," Surg Endosc (2006) vol. 20., pp. 1744-1748.
Chen et al., "Elastomeric Biomaterials for Tissue Engineering," Progress in Polymer Science 38 (2013), pp. 584-671.
Covidien "iDrive™ Ultra Powered Stapling System, A Guide for Surgeons," (6 pages).
Covidien "iDrive™ Ultra Powered Stapling System, Cleaning and Sterilization Guide," (2 pages).
Covidien Brochure "iDrive™ Ultra Powered Stapling System," (6 pages).
Covidien Brochure, "Endo GIA™ Curved Tip Reload with Tri-Staple™ Technology," (2012), 2 pages.
Covidien Brochure, "Endo GIA™ Reloads with Tri-Staple™ Technology and Endo GIA™ Ultra Universal Staplers," (2010), 2 pages.
Covidien Brochure, "Endo GIA™ Reloads with Tri-Staple™ Technology," (2010), 1 page.
Covidien Brochure, "Endo GIA™ Reloads with Tri-Staple™ Technology," (2010), 2 pages.
Covidien Brochure, "Endo GIA™ Black Reload with Tri-Staple™ Technology," (2012), 2 pages.
Covidien Brochure, "Endo GIA™ Ultra Universal Stapler," (2010), 2 pages.
Covidien iDrive™ Ultra in Service Reference Card, "iDrive™ Ultra Powered Stapling Device," (4 pages).
Covidien iDrive™ Ultra Powered Stapling System ibrochure, "The Power of iDrive™ Ultra Powered Stapling System and Tri-Staple™ Technology," (23 pages).
Cuper et al., "The Use of Near-Infrared Light for Safe and Effective Visualization of Subsurface Blood Vessels to Facilitate Blood Withdrawal in Children," Medical Engineering & Physics, vol. 35, No. 4, pp. 433-440 (2013).
D. Tuite, Ed., "Get the Lowdown on Ultracapacitors," Nov. 15, 2007; [online] URL: http://electronicdesign.com/Articles/Print.cfm?ArticleID=17465, accessed Jan. 15, 2008 (5 pages).
Data Sheet of LM4F230H5QR, 2007.
Datasheet for Panasonic TK Relays Ultra Low Profile 2 A Polarized Relay, Copyright Matsushita Electric Works, Ltd. (Known of at least as early as Aug. 17, 2010), 5 pages.
Disclosed Anonymously, "Motor-Driven Surgical Stapler Improvements," Research Disclosure Database No. 526041, Published: Feb. 2008.
Ebara, "Carbohydrate-Derived Hydrogels and Microgels," Engineered Carbohydrate-Based Materials for Biomedical Applications: Polymers, Surfaes, Dendrimers, Nanoparticles, and Hydrogels, Edited by Ravin Narain, 2011, pp. 337-345.
Fast, Versatile Blackfin Processors Handle Advanced RFID Reader Applications; Analog Dialogue: vol. 40—Sep. 2006; http://www.analog.com/library/analogDialogue/archives/40-09/rfid.pdf; Wayback Machine to Feb. 15, 2012.
Hoffman, "Hydrogels for Biomedical Applications," Advanced Drug Delivery Reviews, 43 (2002) pp. 3-12.
Hoffman, "Hydrogels for Biomedical Applications," Advanced Drug Delivery Reviews, 54 (2002) pp. 3-12.
http://ninpgan.net/publications/51-100/89.pdf; 2004, Ning Pan, on Uniqueness of Fibrous Materials, Design & Nature II. Eds: Colins, M. and Brebbia, C. WIT Press, Boston, 493-504.
Jeong et al., "Thermosensitive Sol-Gel Reversible Hydrogels," Advanced Drug Delivery Reviews, 54 (2002) pp. 37-51.
Lyon et al. "The Relationship Between Current Load and Temperature for Quasi-Steady State and Transient Conditions," SPIE—International Society for Optical Engineering. Proceedings, vol. 4020, (pp. 62-70), Mar. 30, 2000.
Matsuda, "Thermodynamics of Formation of Porous Polymeric Membrane from Solutions," Polymer Journal, vol. 23, No. 5, pp. 435-444 (1991).
Miyata et al., "Biomolecule-Sensitive Hydrogels," Advanced Drug Delivery Reviews, 54 (2002) pp. 79-98.
Mouser Electronics, "LM317 3-Terminal Adjustable Regulator with Overcurrent/Overtemperature Self Protection", Sep. 30, 2016 (Sep. 30, 2016), XP0555246104, Retrieved from the Internet: URL: http://www.mouser.com/ds/2/405/lm317m-440423.pdf, pp. 1-9.
Mouser Electronics, "LM317M 3-Terminal Adjustable Regulator with Overcurrent/Overtemperature Self Protection", Mar. 31, 2014 (Mar. 31, 2014), XP0555246104, Retrieved from the Internet: URL: http://www.mouser.com/ds/2/405/lm317m-440423.pdf, pp. 1-8.
Patrick J. Sweeney: "RFID for Dummies", Mar. 11, 2010, pp. 365-365, XP055150775, ISBN: 978-1-11-805447-5, Retrieved from the Internet: URL: books.google.de/books?isbn=1118054474 [retrieved on Nov. 4, 2014]—book not attached.
Pellicer et al. "On the biodegradability, mechanical behavior, and cytocompatibility of amorphous Mg72Zn23Ca5 and crystalline Mg70Zn23Ca5Pd2 alloys as temporary implant materials," J Biomed Mater Res Part A ,2013:101A:502-517.
Peppas, "Physiologically Responsive Hydrogels," Journal of Bioactive and Compatible Polymers, vol. 6 (Jul. 1991) pp. 241-246.
Peppas, Editor "Hydrogels in Medicine and Pharmacy," vol. I, Fundamentals, CRC Press, 1986.
Pitt et al., "Attachment of Hyaluronan to Metallic Surfaces," J. Biomed. Mater. Res. 68A: pp. 95-106, 2004.
Qiu et al., "Environment-Sensitive Hydrogels for Drug Delivery," Advanced Drug Delivery Reviews, 53 (2001) pp. 321-339.
Schellhammer et al., "Poly-Lactic-Acid for Coating of Endovascular Stents: Preliminary Results in Canine Experimental Av-Fistulae," Mat.-wiss. u. Werkstofftech., 32, pp. 193-199 (2001).
Seils et al., Covidien Summary: Clinical Study "UCONN Biodynamics: Final Report on Results," (2 pages).
Serial Communication Protocol; Michael Lemmon Feb. 1, 2009; http://www3.nd.edu/~lemmon/courses/ee224/web-manual/web-manual/lab12/node2.html; Wayback Machine to Apr. 29, 2012.
Solorio et al., "Gelatin Microspheres Crosslinked with Genipin for Local Delivery of Growth Factors," J. Tissue Eng. Regen. Med. (2010), 4(7): pp. 514-523.
Texas Instruments: "Current Recirculation and Decay Modes," Application Report SLVA321—Mar., 2009; Retrieved from the Internet: URL:http://www.ti.com/lit/an/slva321/slva321 [retrieved on Apr. 25, 2017], 7 pages.
The Sodem Aseptic Battery Transfer Kit, Sodem Systems, 2000, 3 pages.
Van Meer et al., "A Disposable Plastic Compact Wrist for Smart Minimally Invasive Surgical Tools," LAAS/CNRS (Aug. 2005).
Yan et al, Comparison of the effects of Mg—6Zn and Ti—3Al—2.5V alloys on TGF-β/TNF-α/VEGF/b-FGF in the healing of the intestinal track in vivo, Biomed. Mater. 9 (2014), 11 pages.
Yan et al., "Comparison of the effects of Mg-6Zn and titanium on intestinal tract in vivo," J Mater Sci: Mater Med (2013), 11 pages.
Young, "Microcellular foams via phase separation," Journal of Vacuum Science & Technology A 4(3), (May/Jun. 1986).

(56) **References Cited**

OTHER PUBLICATIONS

Petition for Inter Partes Review of U.S. Pat. No. 8,317,070, filed Mar. 25, 2013; IPR 2013-00209.
Declaration of Henry Bolanos, Covidien Exhibit 1010, filed Mar. 25, 2013; IPR 2013-00209.
Curriculum Vitae of Henry Bolanos, Covidien Exhibit 1011, filed Mar. 25, 2013; IPR 2013-00209.
Excerpts from The American Heritage® College Dictionary, Fourth Edition, Copyright 2002, Covidien Exhibit 1016, filed Mar. 25, 2013; IPR 2013-00209.
Excerpts from Webster's II New College Dictionary, Third Edition, Copyright 2005, Covidien Exhibit 1017, filed Mar. 25, 2013; IPR 2013-00209.
Excerpts from Merriam-Webster's Collegiate® Dictionary, Eleventh Edition, Copyright 2005, Covidien Exhibit 1018, filed Mar. 25, 2013; IPR 2013-00209.
Ethicon Endo-Surgery, Inc.'s Mandatory Notices, filed Apr. 12, 2013; IPR 2013-00209.
Ethicon Endo-Surgery, Inc.'s Preliminary Response, filed Jun. 21, 2013; IPR 2013-00209.
Decision, Institution of Inter Partes Review 37 C.F.R. § 42.108, dated Aug. 26, 2013; IPR 2013-00209.
Petitioner's Request for Rehearing Under 37 C.F.R. § 42.71(d), filed Sep. 9, 2013; IPR 2013-00209.
Decision, Petitioner's Request for Rehearing 37 C.F.R. § 42.71, dated Sep. 20, 2013; IPR 2013-00209.
Ethicon Endo-Surgery, Inc.'s Patent Owner Response Pursuant to 37 C.F.R. § 42.120, filed Nov. 19, 2013; IPR 2013-00209.
Expert Declaration of Mark S. Ortiz, Ethicon Exhibit 2004, filed Nov. 19, 2013; IPR 2013-00209.
Resume of Mark S. Ortiz, Ethicon Exhibit 2005, filed Nov. 19, 2013; IPR 2013-00209.
Covidien's Nov. 24, 2008 510(k) Summary of Safety and Effectiveness, Ethicon Exhibit 2013, filed Nov. 19, 2013; IPR 2013-00209.
Covidien Technical Brochure: Endo GIA™ Reloads with Tri-Staple™ Technology, Ethicon Exhibit 2014, filed Nov. 19, 2013; IPR 2013-00209.
Claim Chart—U.S. Pat. No. 8,317,070, Exhibit 2015, filed Nov. 19, 2013; IPR 2013-00209.
Jan. 7, 2013 Covidien News Release "Covidien's Tri-Staple™ Technology Platform Reaches $1 Billion Sales Milestone", Ethicon Exhibit 2016, filed Nov. 19, 2013; IPR 2013-00209.
IMS Raw Data, Ethicon Exhibit 2017, filed Nov. 19, 2013; IPR 2013-00209.
Covidien Tri-Staple™ Brochure, Ethicon Exhibit 2018, filed Nov. 19, 2013; IPR 2013-00209.
2012 Covidien Annual Report, Ethicon Exhibit 2019, filed Nov. 19, 2013; IPR 2013-00209.
IMS Pricing, Ethicon Exhibit 2021, filed Nov. 19, 2013; IPR 2013-00209.
IMS Unit Data, Ethicon Exhibit 2022, filed Nov. 19, 2013; IPR 2013-00209.
Covidien Website—Endo GIA™ Ultra Universal Staplers and Reloads, Ethicon Exhibit 2023, filed Nov. 19, 2013; IPR 2013-00209.
Covidien Technical Brochure: Endo GIA™ Reloads with Tri-Staple™ Technology and Endo GIA™ Ultra Universal Staplers, Ethicon Exhibit 2024, filed Nov. 19, 2013; IPR 2013-00209.
Ethicon Endo-Surgery, Inc.'s Updated Mandatory Notices, filed Dec. 9, 2013; IPR 2013-00209.
Petitioner's Reply Under 37 C.F.R. § 42.23 to Patent Owner Response, filed Feb. 5, 2014; IPR 2013-00209.
Petitioner's Current List of Exhibits, filed Feb. 5, 2014; IPR 2013-00209.
Transcript from Deposition of Henry Bolanos taken Nov. 7, 2013, Covidien Exhibit 1019, filed Feb. 5, 2014; IPR 2013-00209.
Transcript from Deposition of Mark S. Ortiz taken Jan. 15, 2014, Covidien Exhibit 1023, filed Feb. 5, 2014; IPR 2013-00209.
Patent Owner's Response filed Jun. 2, 2008, in European Patent Application No. 06254511.6, Covidien Exhibit 1024, filed Feb. 5, 2014; IPR 2013-00209.
Communication from the European Patent Office dated Jan. 24, 2007, in European Patent Application No. 06254511.6, Covidien Exhibit 1025, filed Feb. 5, 2014; IPR 2013-00209.
Communication from the European Patent Office dated Feb. 13, 2008, in European Patent Application No. 06254511.6, Covidien Exhibit 1026, filed Feb. 5, 2014; IPR 2013-00209.
Patent Owner Response filed Jun. 29, 2011, in European Patent Application No. 10178489.0, Covidien Exhibit 1027, filed Feb. 5, 2014; IPR 2013-00209.
Communication from the European Patent Office dated Nov. 29, 2010, in European Patent Application No. 10178489.0, Covidien Exhibit 1028, filed Feb. 5, 2014; IPR 2013-00209.
Patent Owner's Response filed Jul. 26, 2011, in European Patent Application No. 10179946.8, Covidien Exhibit 1029, filed Feb. 5, 2014; IPR 2013-00209.
Communication from the European Patent Office dated Dec. 2, 2010, in European Patent Application No. 10179946.8, Covidien Exhibit 1030, filed Feb. 5, 2014; IPR 2013-00209.
Rebuttal Declaration of Henry Bolanos, Covidien Exhibit 1031, filed Feb. 5, 2014; IPR 2013-00209.
Patent Owner's Submission dated Mar. 1, 2010 from a suit in Germany relating to European Patent No. EP 0 337 612 (German Patent No. DE 689 07 255)(including English-language translation and Certificate of Translation), Covidien Exhibit 1032, filed Feb. 5, 2014; IPR 2013-00209.
Expert Report of William David Kelly dated Feb. 8, 2006 from a suit in Germany relating to European Patent No. EP 0 337 612 (German Patent No. DE 689 07 255), Covidien Exhibit 1033, filed Feb. 5, 2014; IPR 2013-00209.
Petitioner's Demonstrative Exhibits, filed Apr. 7, 2014; IPR 2013-00209.
Patent Owner's Demonstrative Exhibits, filed Apr. 7, 2014; IPR 2013-00209.
Oral Hearing Transcript, held Apr. 10, 2014, entered May 9, 2014; IPR 2013-00209.
Final Written Decision 35 U.S.C. § 318(a) and 37 C.F.R. § 42.73, entered Jun. 9, 2014; IPR 2013-00209.
Ethicon Endo-Surgery, Inc.'s Notice of Appeal, filed Aug. 5, 2014; IPR 2013-00209.

* cited by examiner

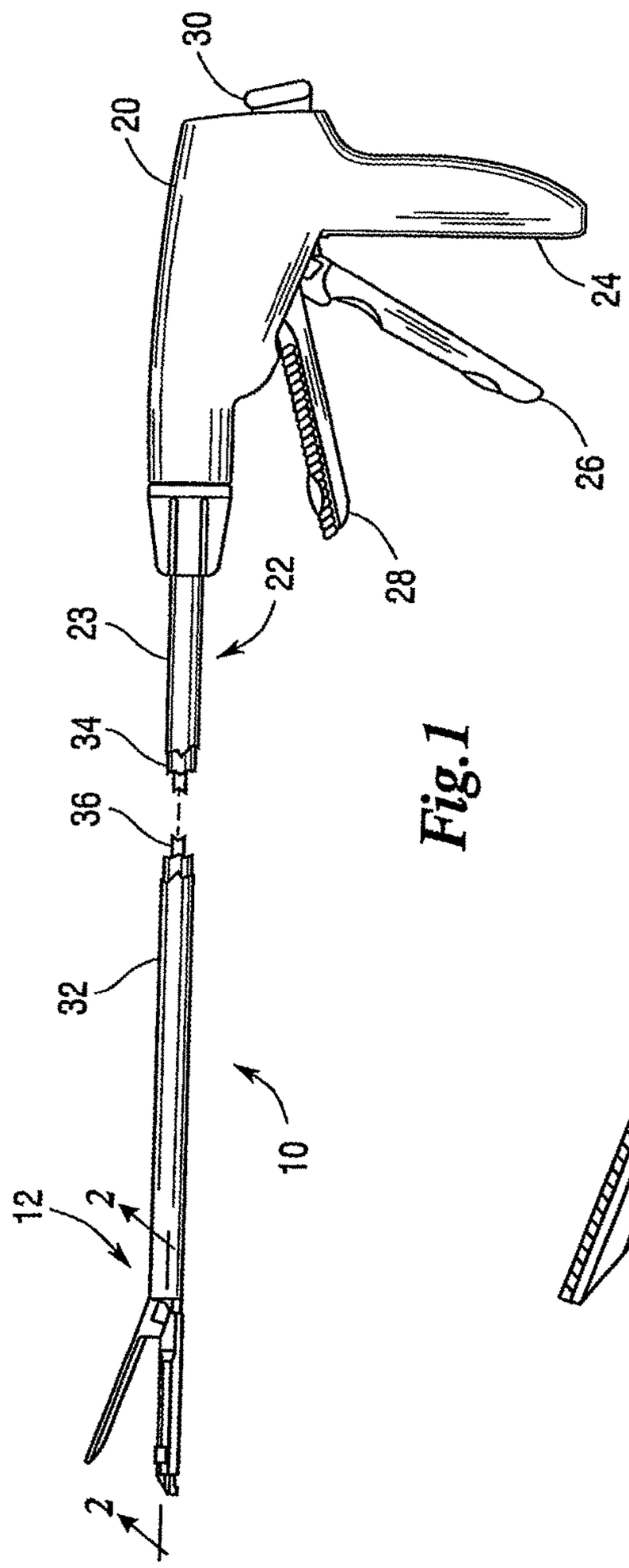
30
20
24
26
28
22
23
34
36
32
10
12
2
2

Fig.1

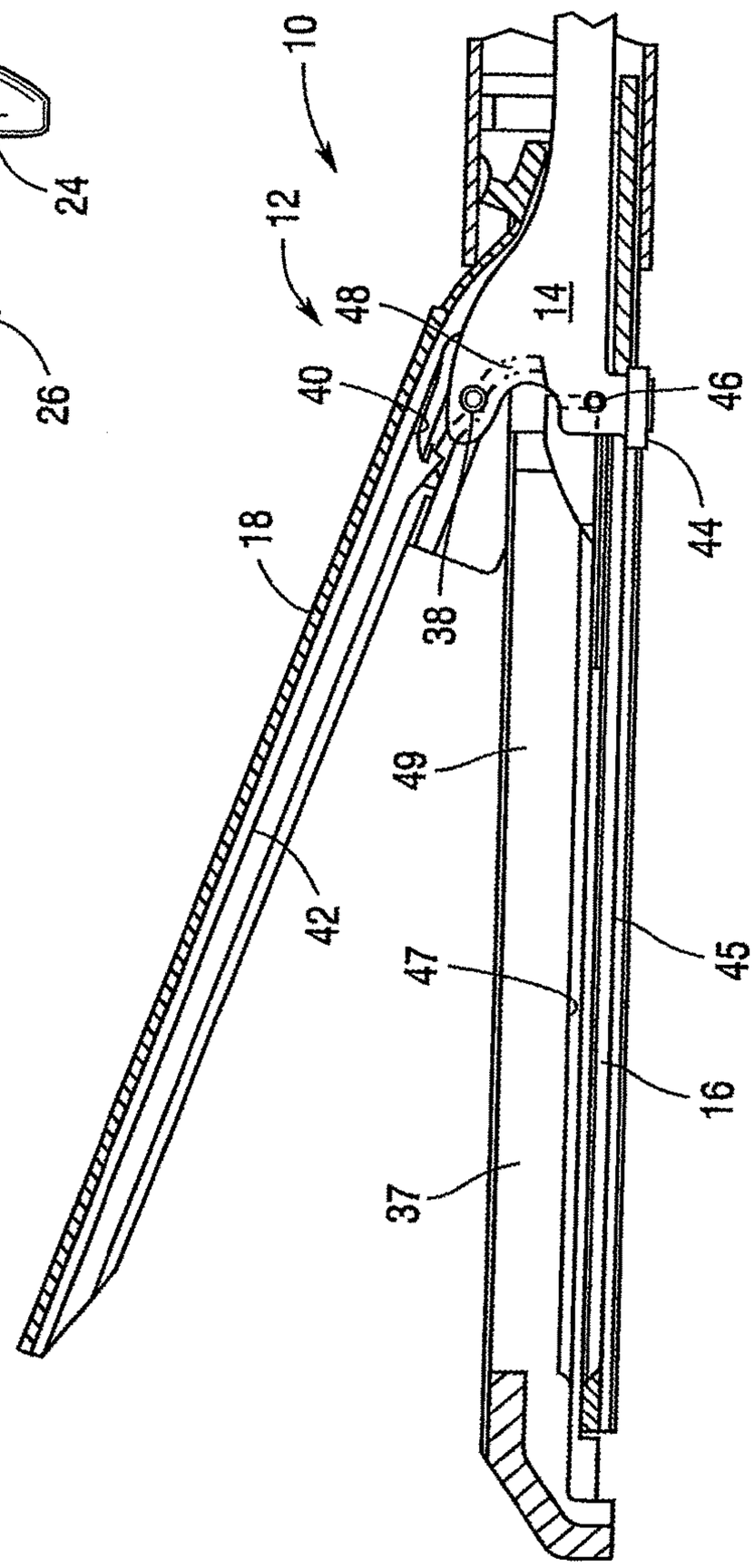
10
12
14
48
40
46
44
18
38
49
42
47
45
16
37

Fig.2

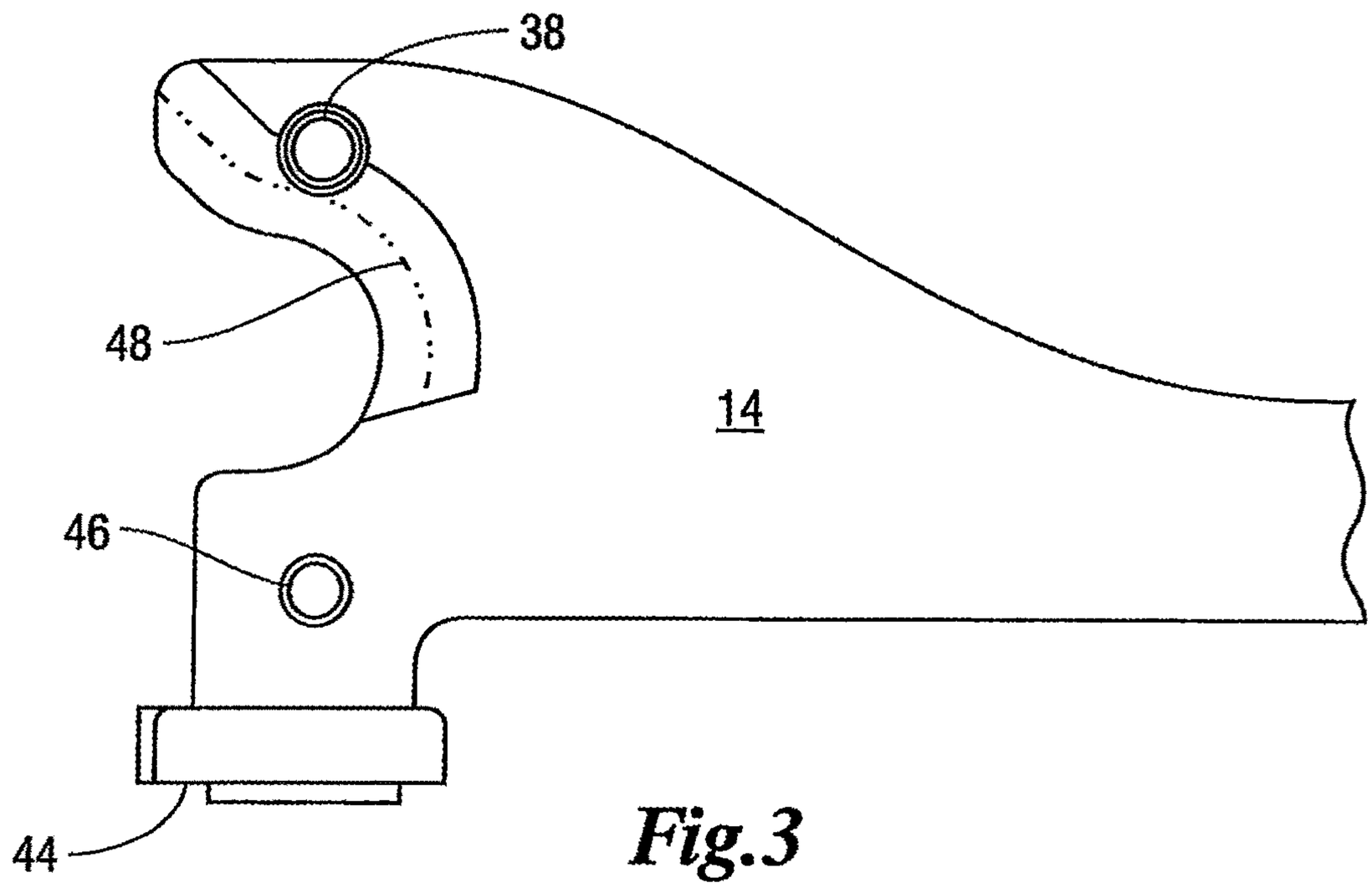


*Fig.3*

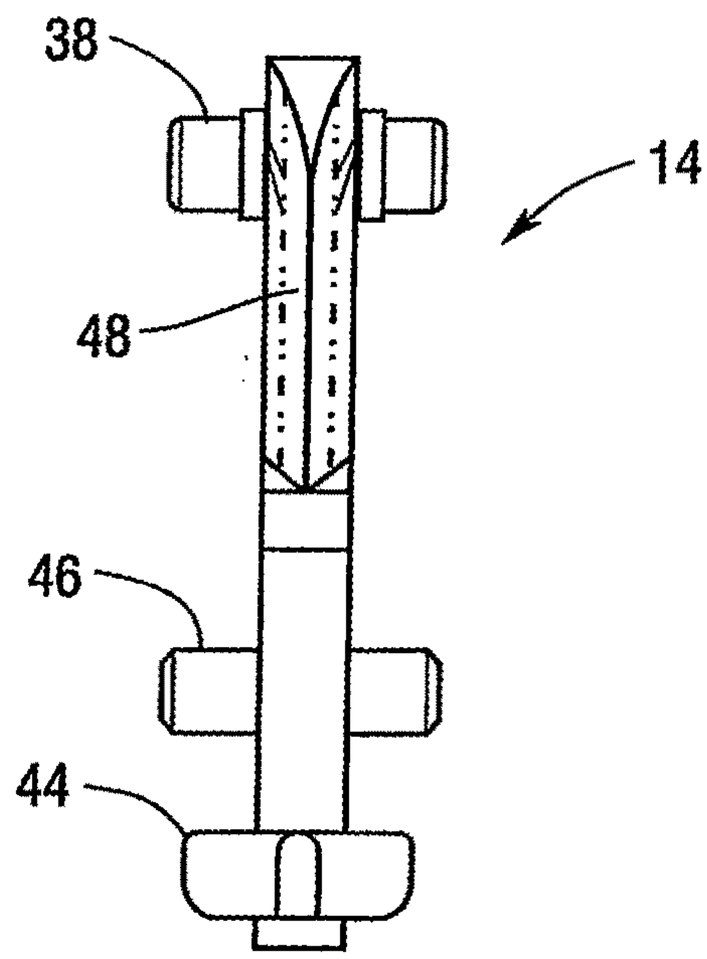


*Fig.4*

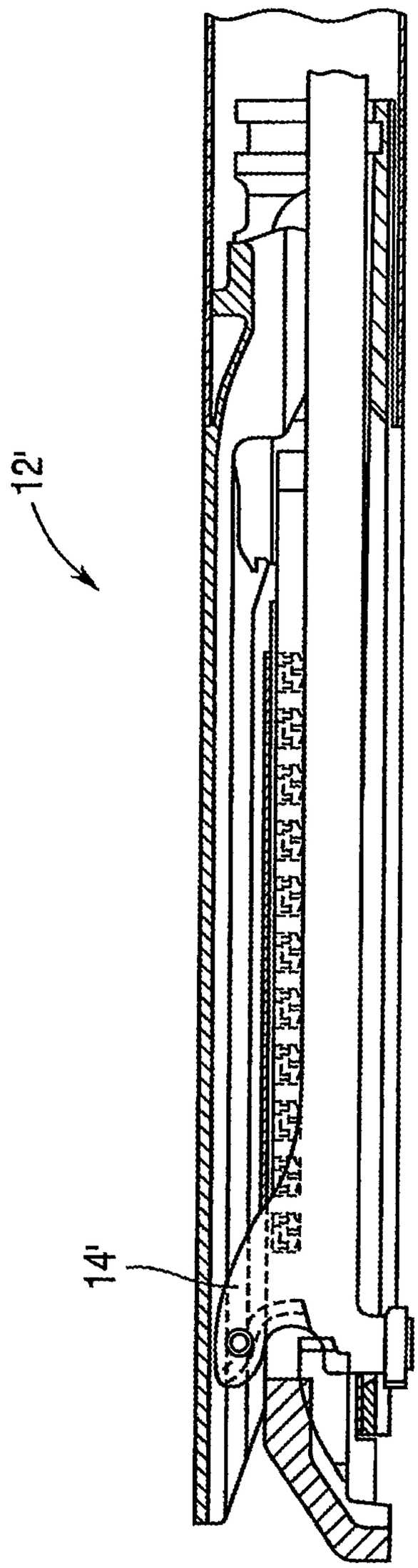


Fig.5

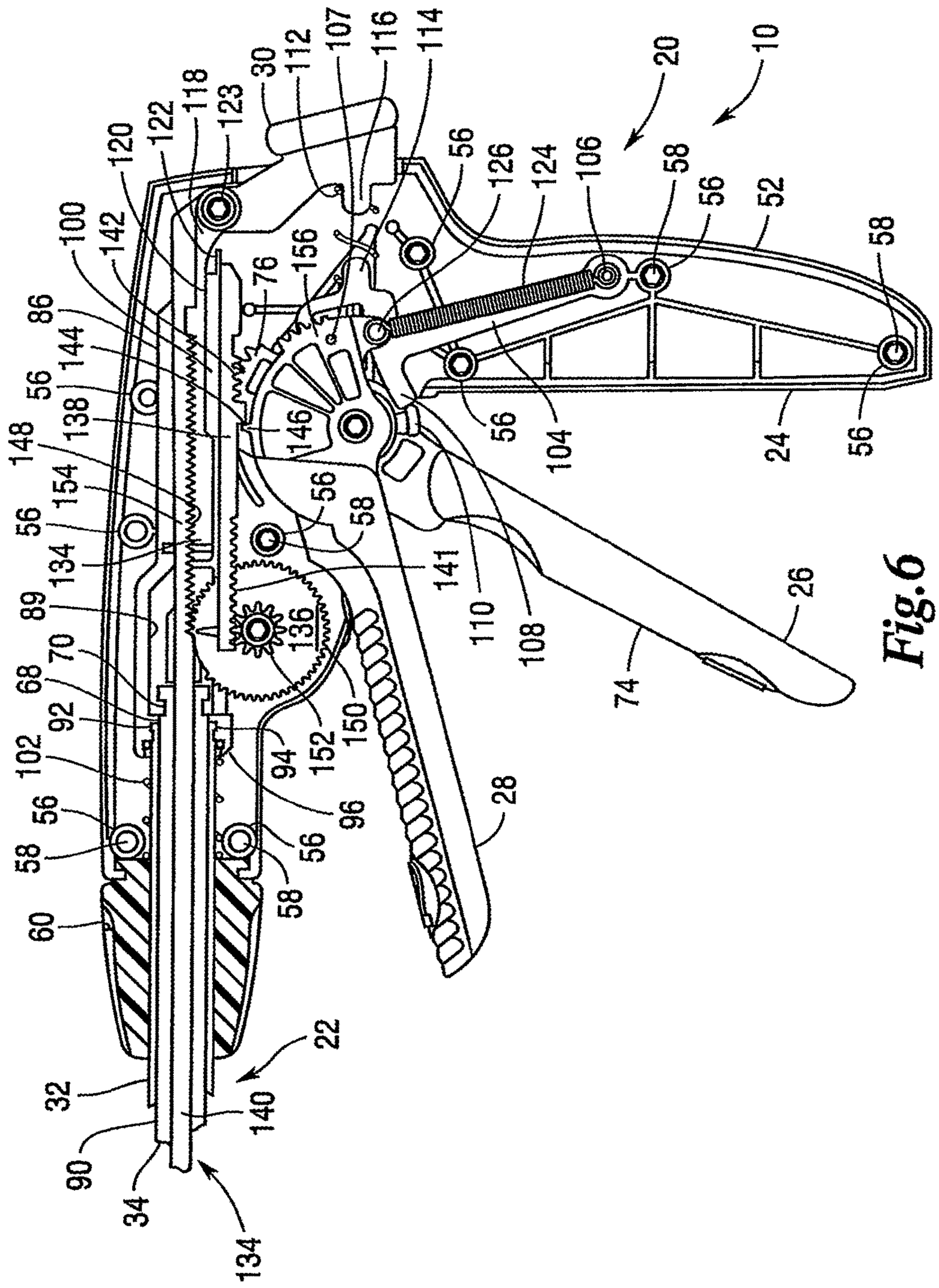
10
20
52
56
58
24
26
74
28
22
104
106
124
126
114
116
107
112
30
123
118
122
120
100
142
86
144
138
148
154
134
89
70
68
92
102
60
32
90
34
134
140
94
96
152
150
136
141
146
156
76
110
108

Fig.6

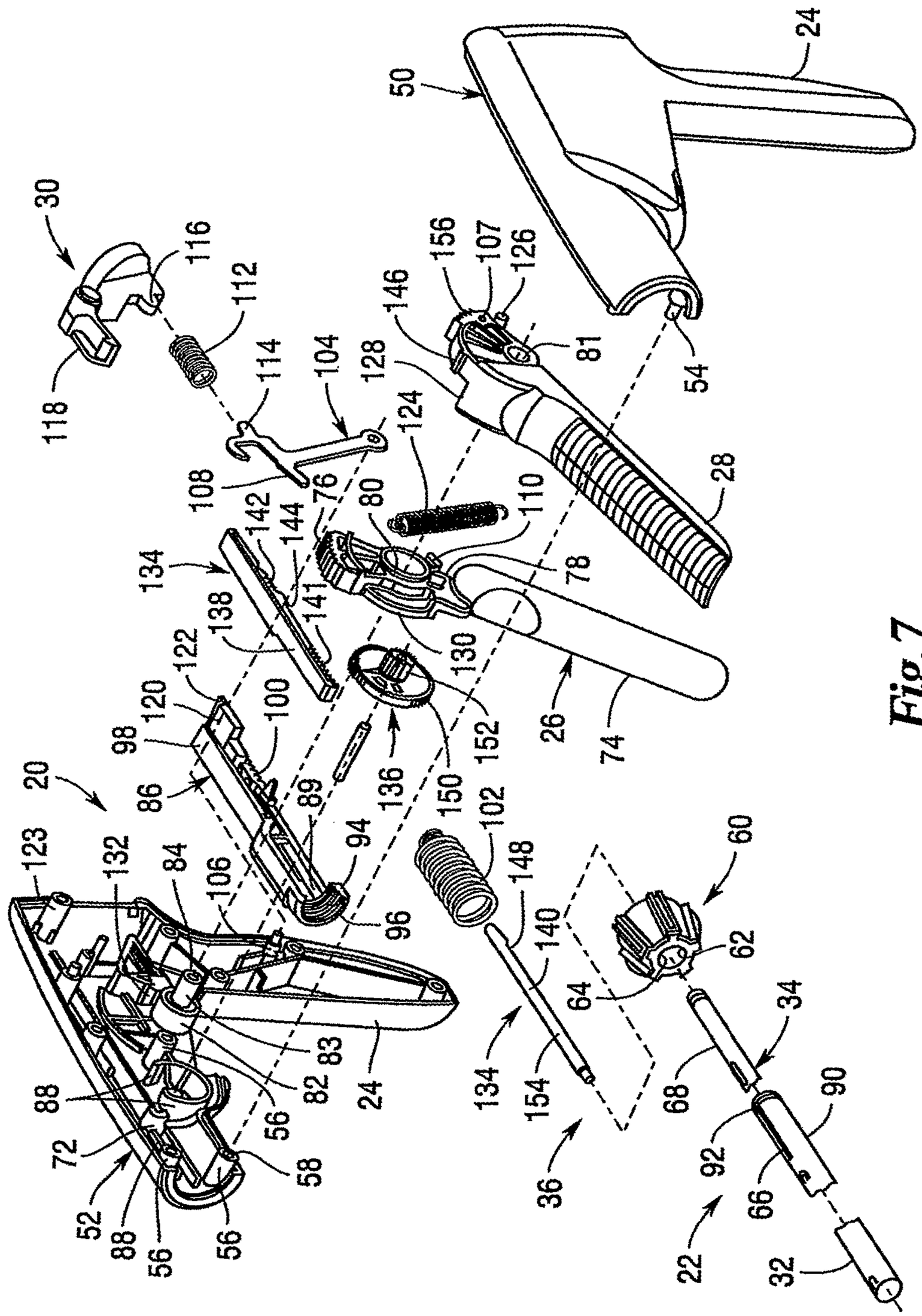
24
50
30
116
112
118
114
104
108
156
107
126
146
128
81
54
124
28
142
144
76
80
110
134
141
78
138
122
130
120
100
152
26
98
74
20
86
89
136
150
102
123
132
84
94
148
60
106
96
140
62
64
34
83
82
24
134
154
68
88
56
90
72
58
92
52
36
66
22
32

Fig. 7

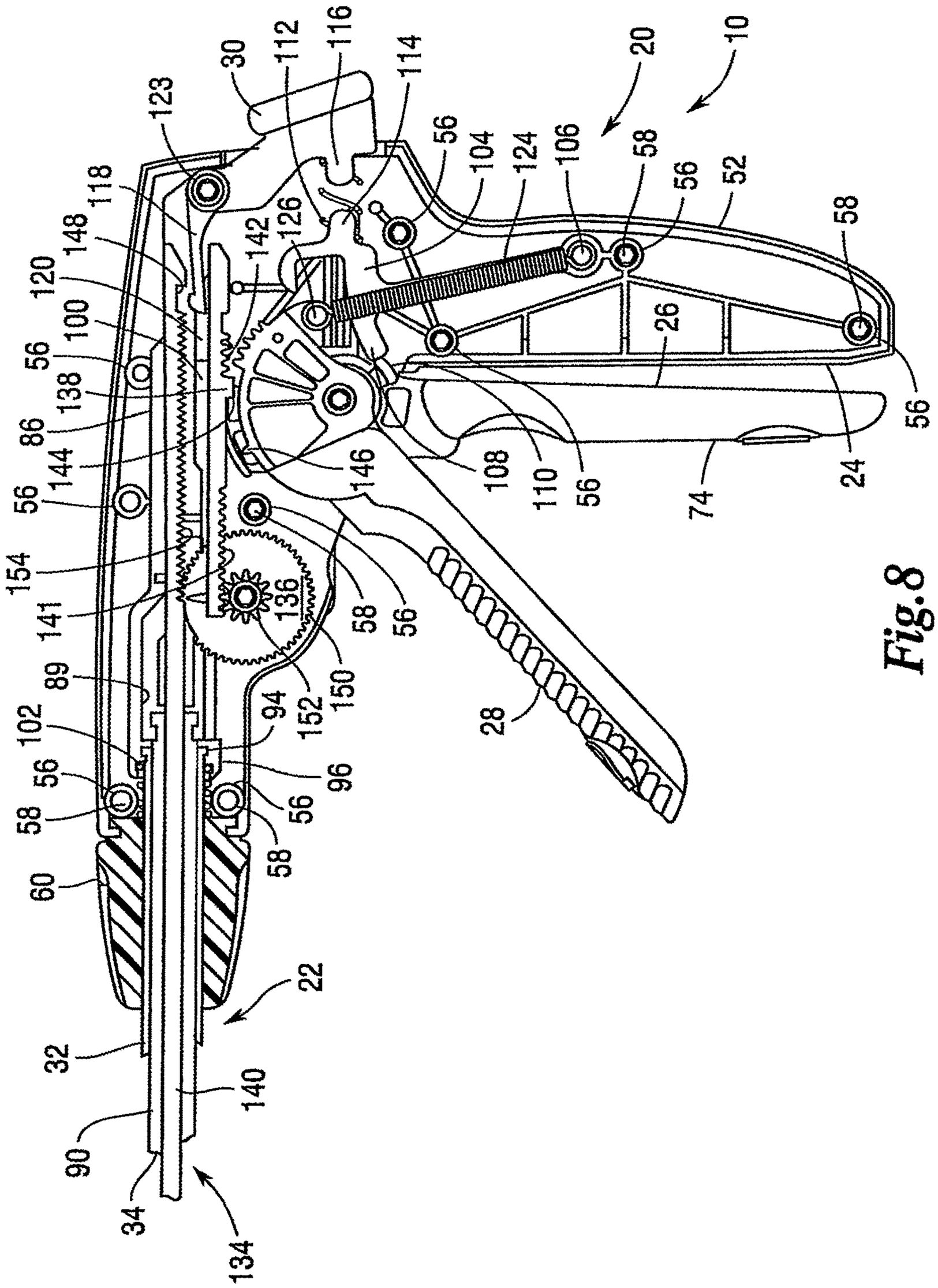
10
20
30
112
116
114
123
118
148
120
100
56
138
86
144
56
154
141
89
102
56
58
60
58
56
58
96
94
152
150
136
58
56
146
108
110
56
74
24
56
26
58
52
56
106
124
104
56
142
126
22
32
140
90
34
134
28

Fig.8

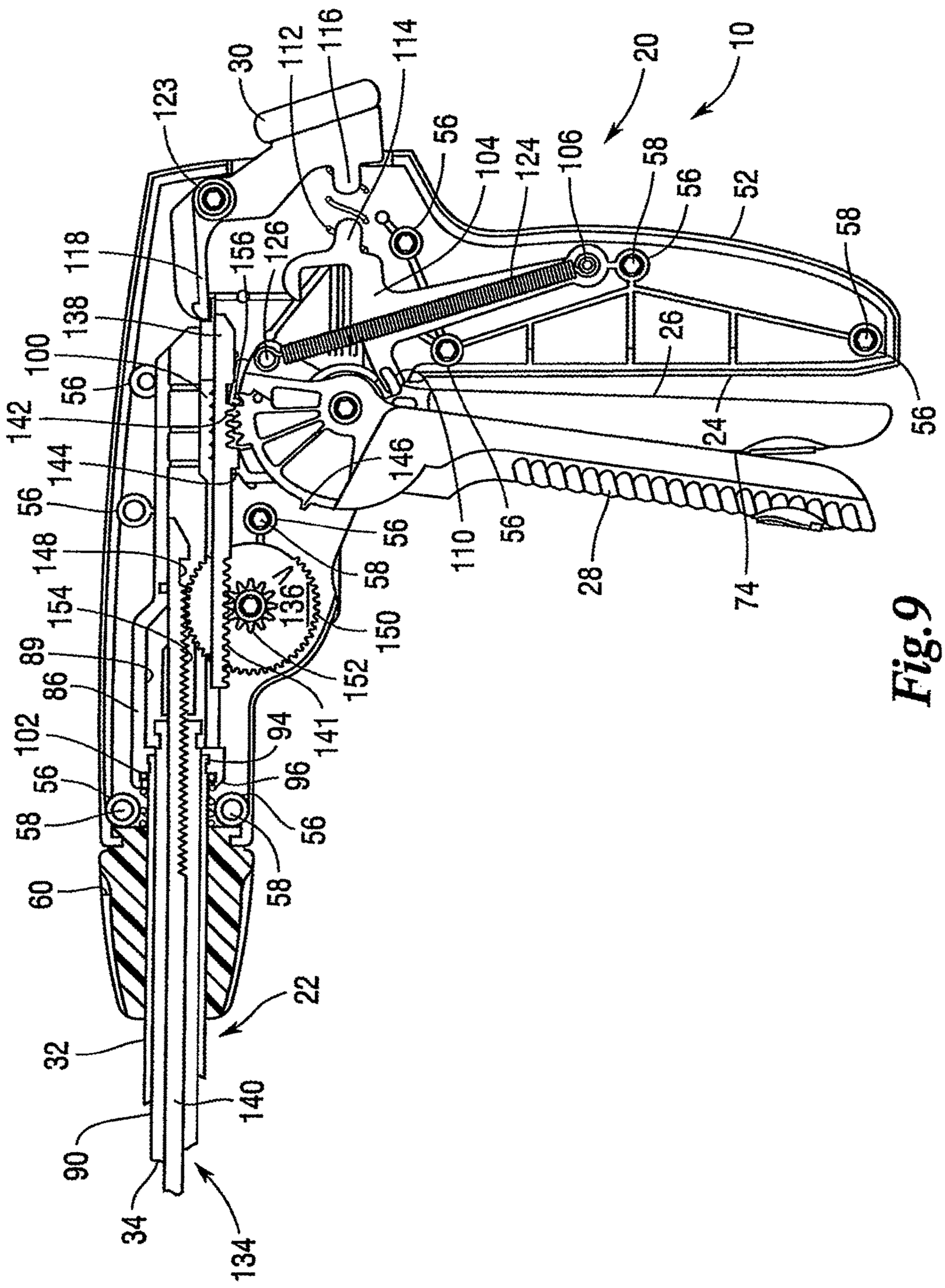
10
20
30
112
116
114
123
56
104
124
106
58
56
52
58
118
156
126
138
100
56
142
144
56
148
154
89
86
102
56
58
60
32
90
34
134
140
22
58
96
56
94
141
152
150
136
58
56
146
110
56
28
74
24
26
56

Fig.9

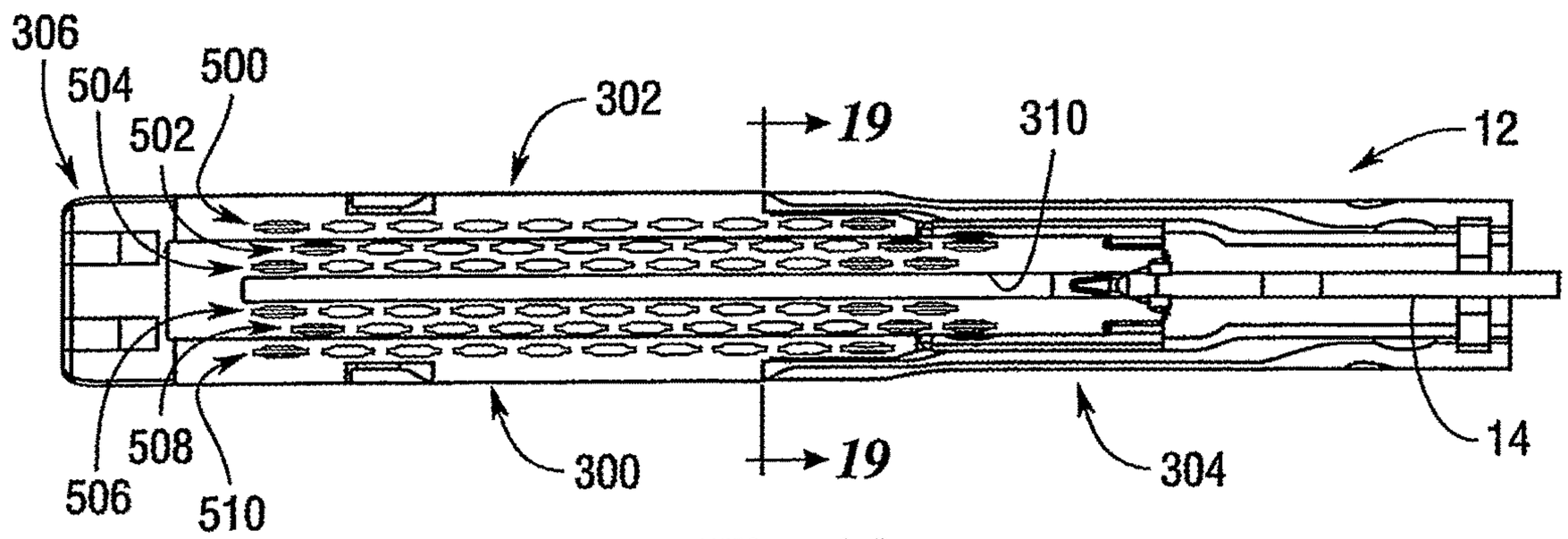
306
504
500
502
302
19
310
12
508
506
510
300
19
304
14

*Fig.10*

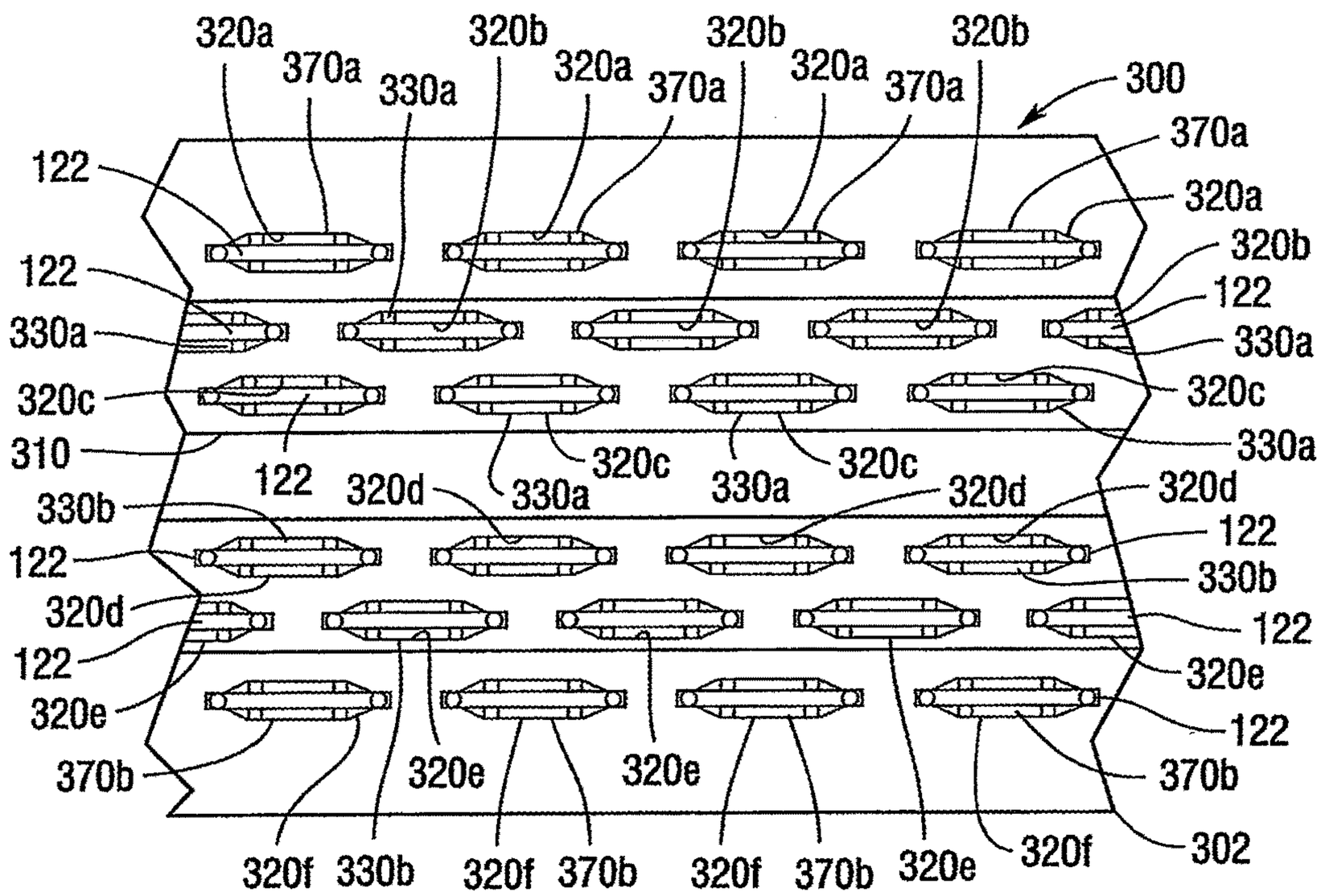
320a
370a
330a
320b
320a
370a
320b
320a
370a
320b
300
370a
122
320a
320b
122
122
330a
330a
320c
320c
310
330a
122
320d
330a
320c
330a
320c
320d
320d
330b
122
122
330b
320d
122
122
320e
320e
122
370b
320e
320e
370b
320f
330b
320f
370b
320f
370b
320e
320f
302

*Fig.11*

Fig.12

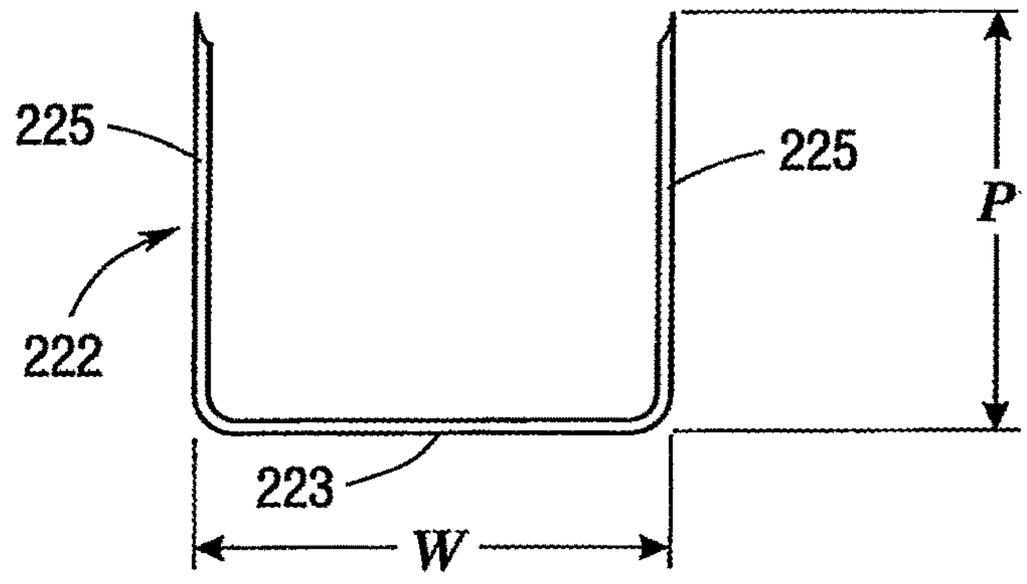


Fig.14

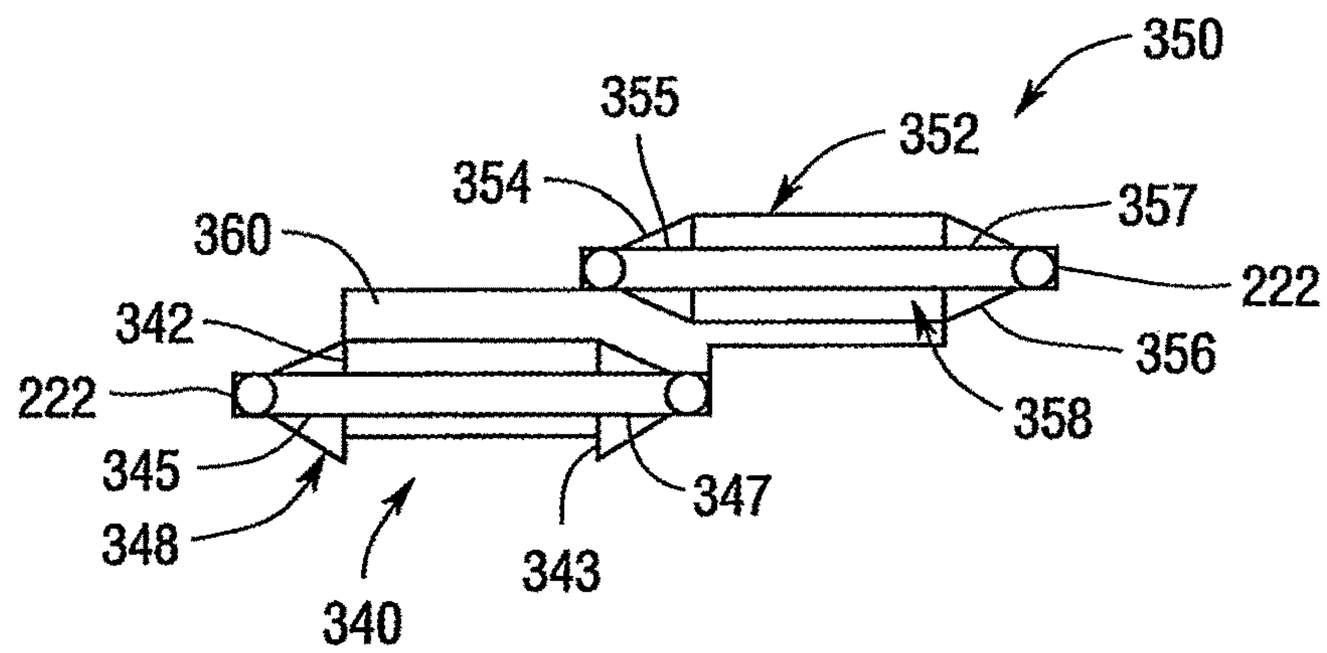


Fig.13

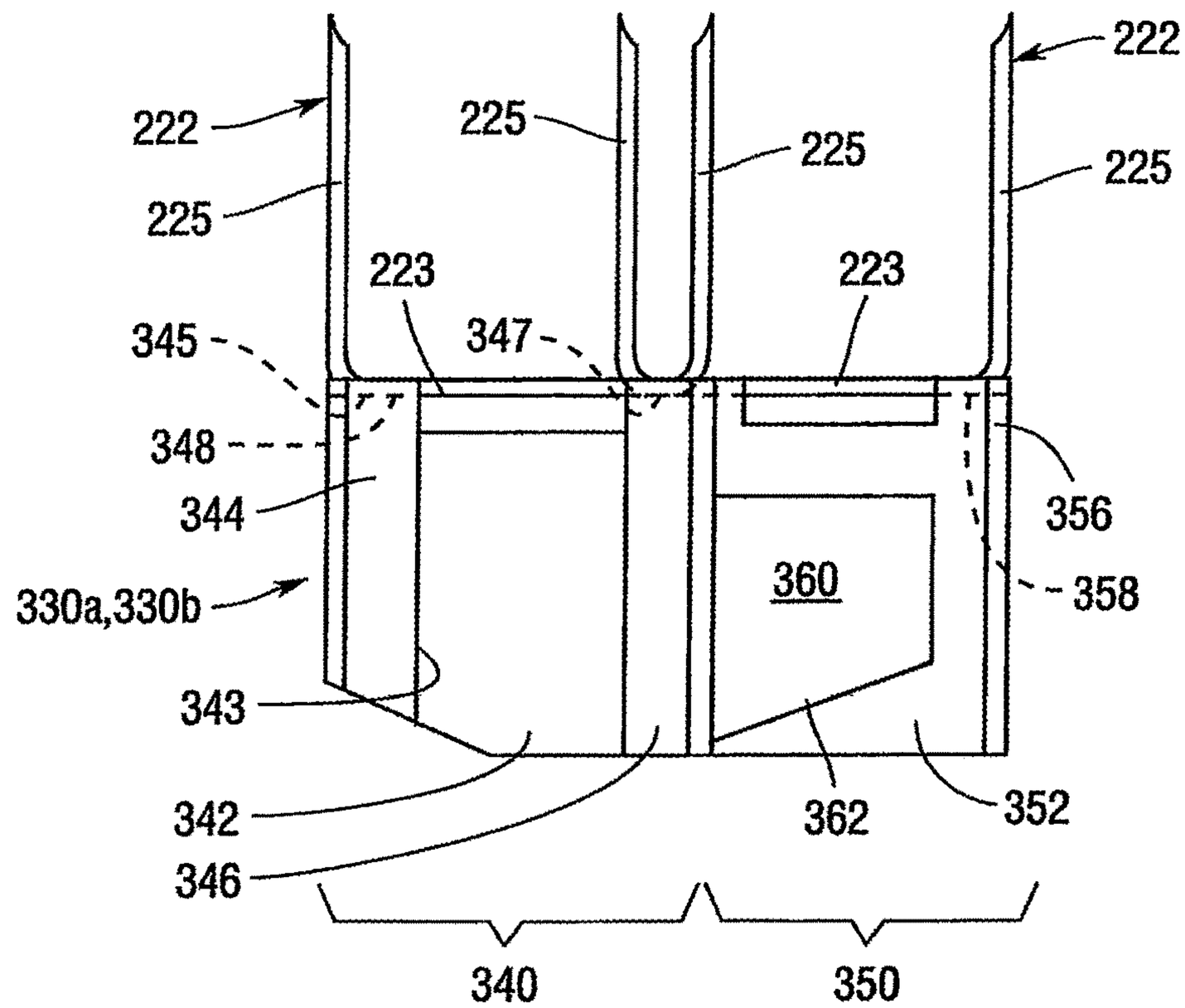

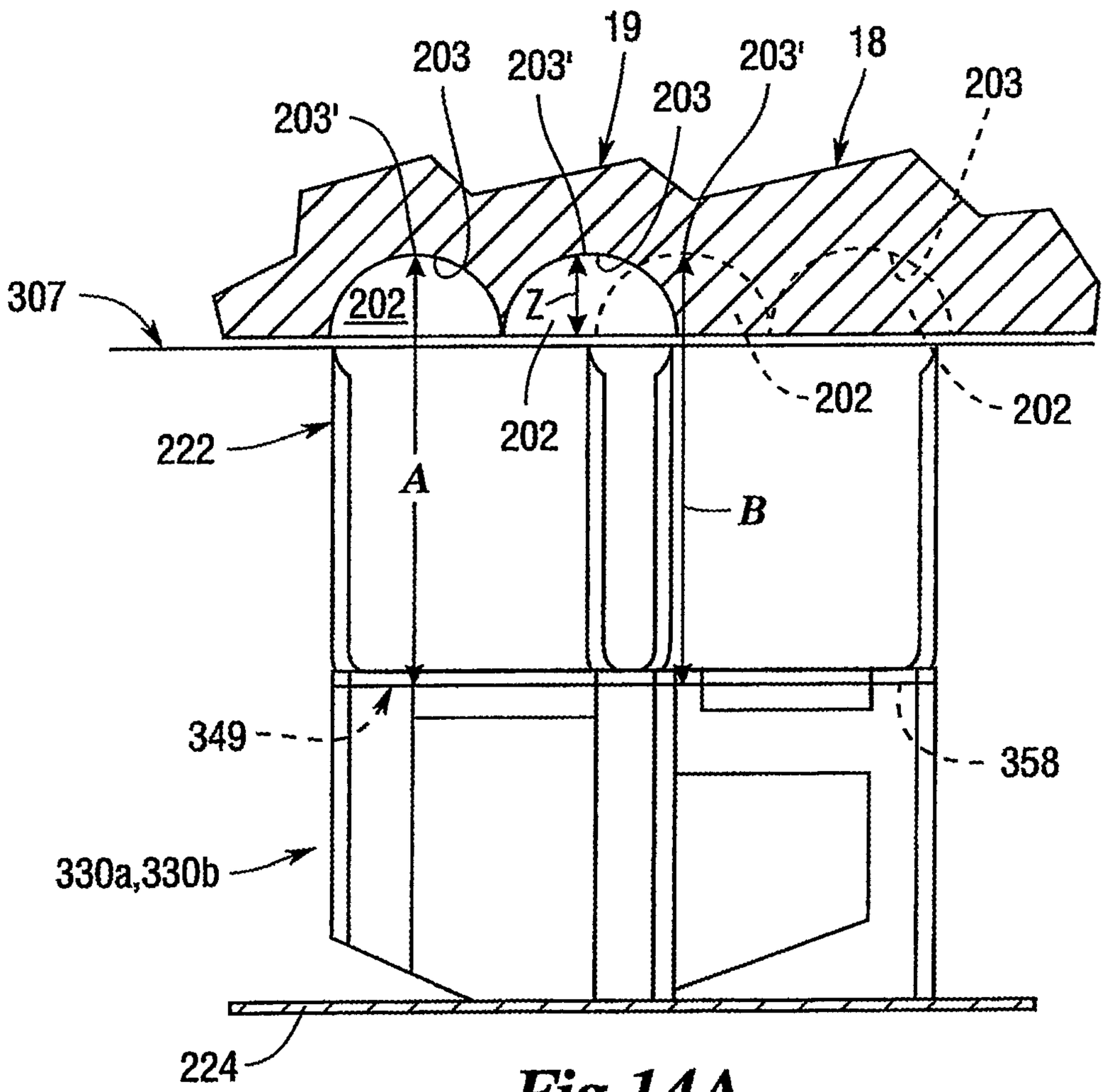
19
203
203'
203'
203
203'
18
203
307
202
Z
202
202
202
222
A
B
349
358
330a,330b
224

Fig.14A

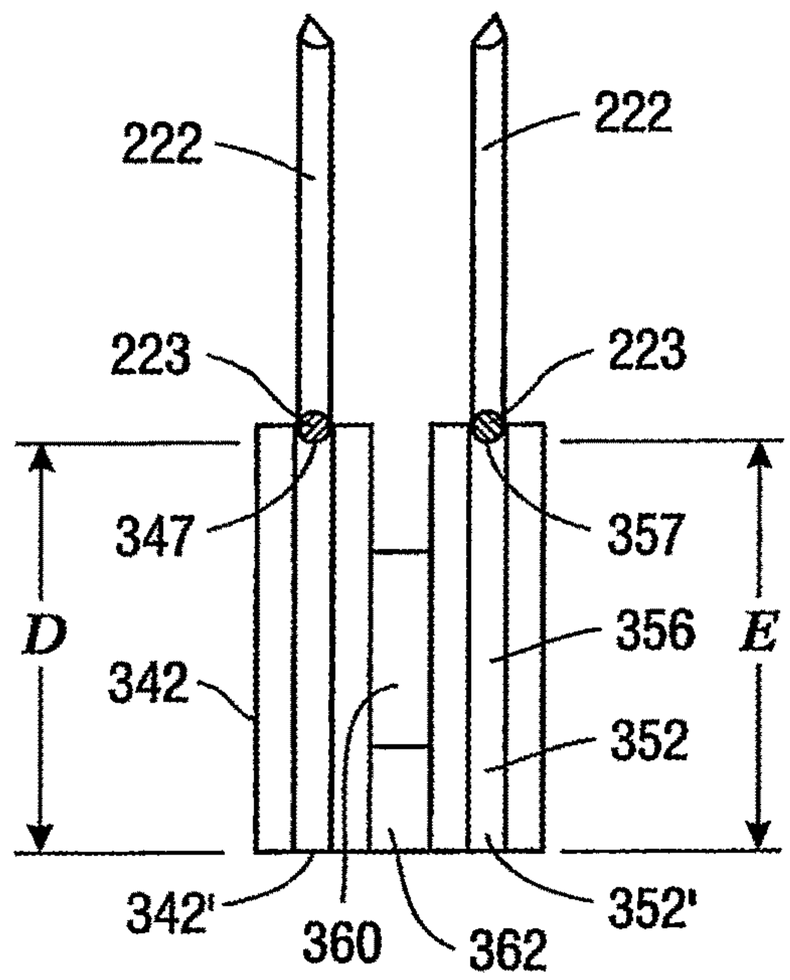


*Fig.15*

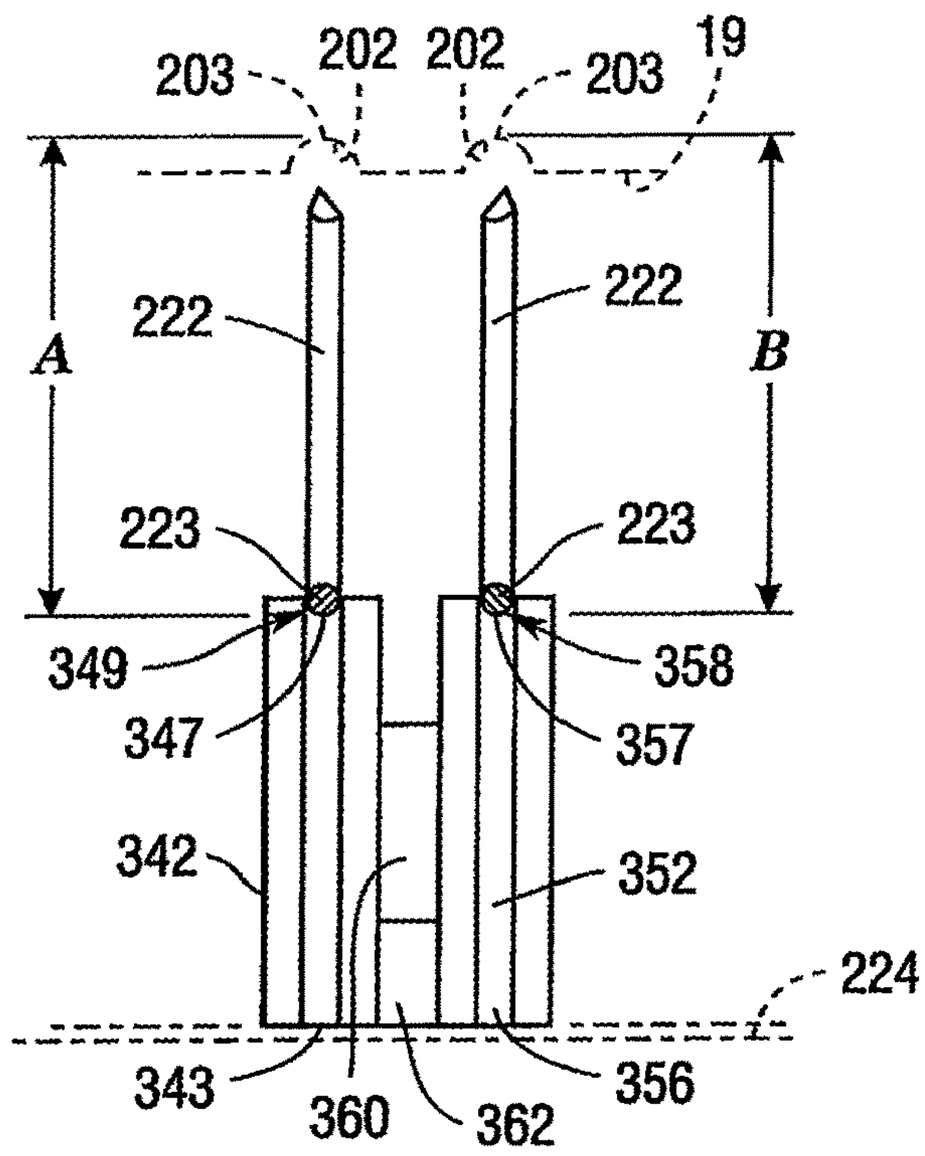


*Fig.15A*

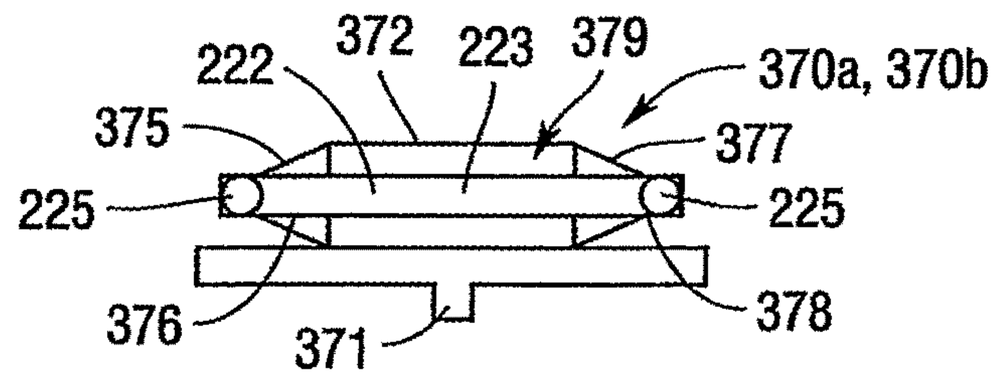


Fig.17

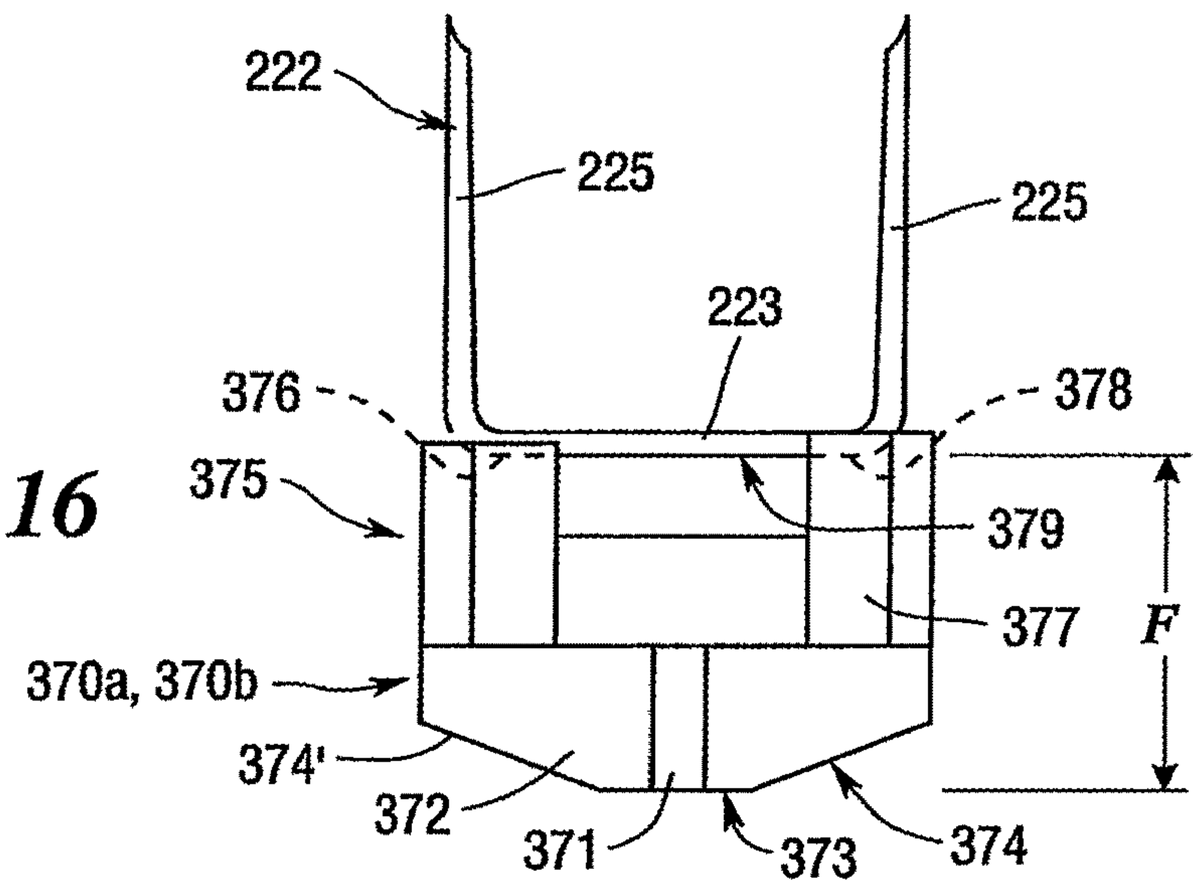


Fig.16

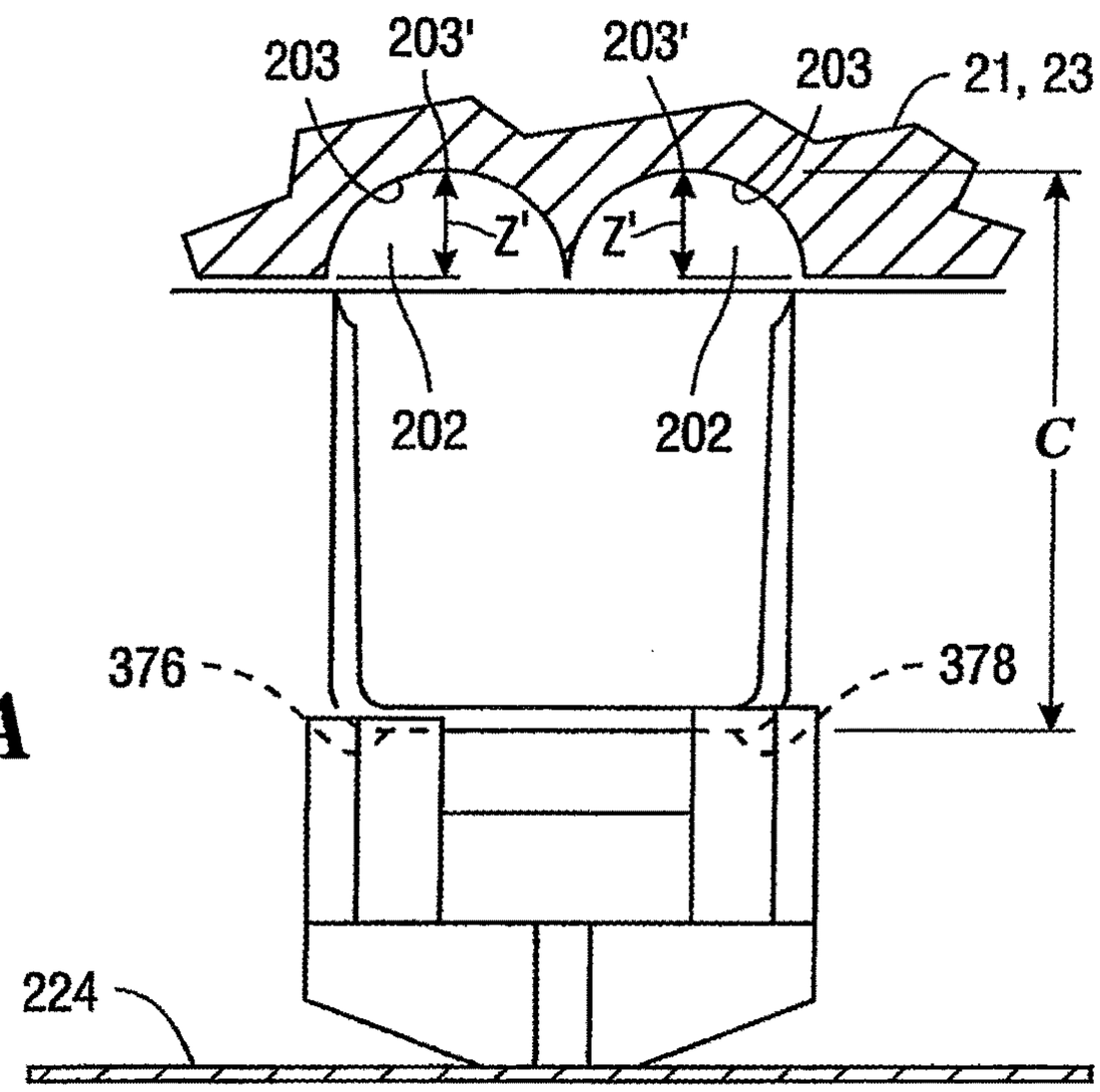


Fig.16A

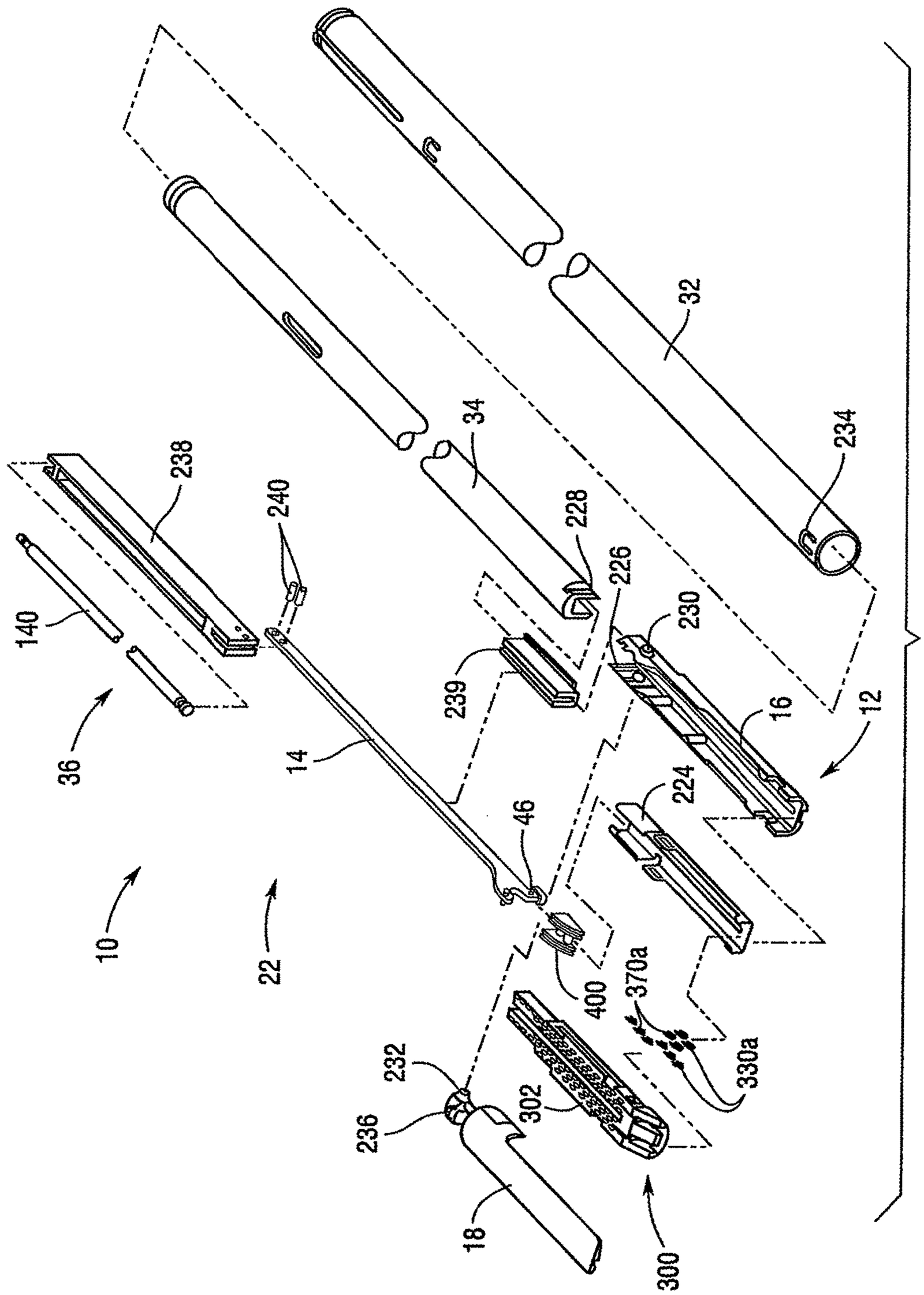
10
12
14
16
18
22
32
34
36
46
140
224
226
228
230
232
234
236
238
239
240
300
302
330a
370a
400

Fig.18

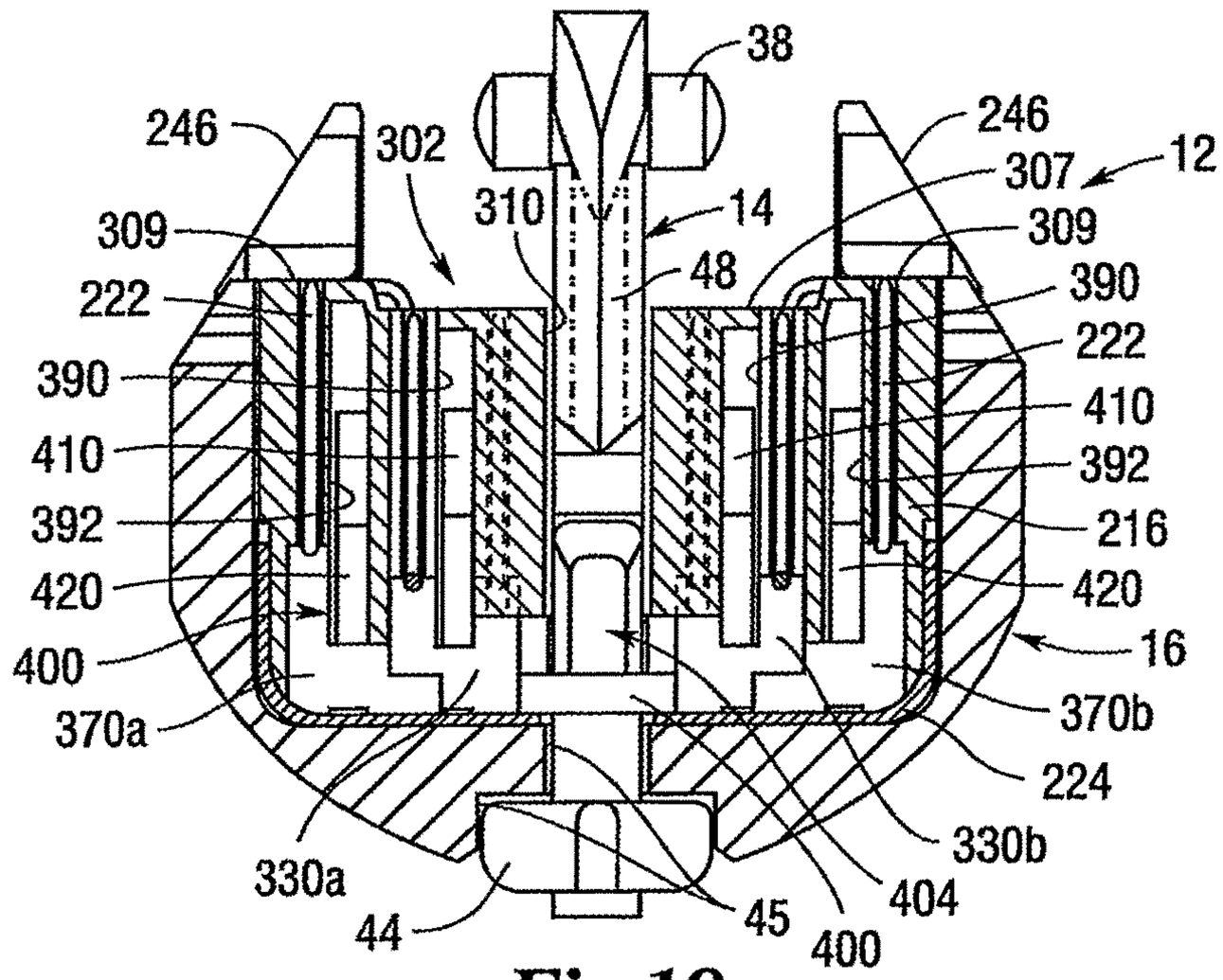


*Fig.19*

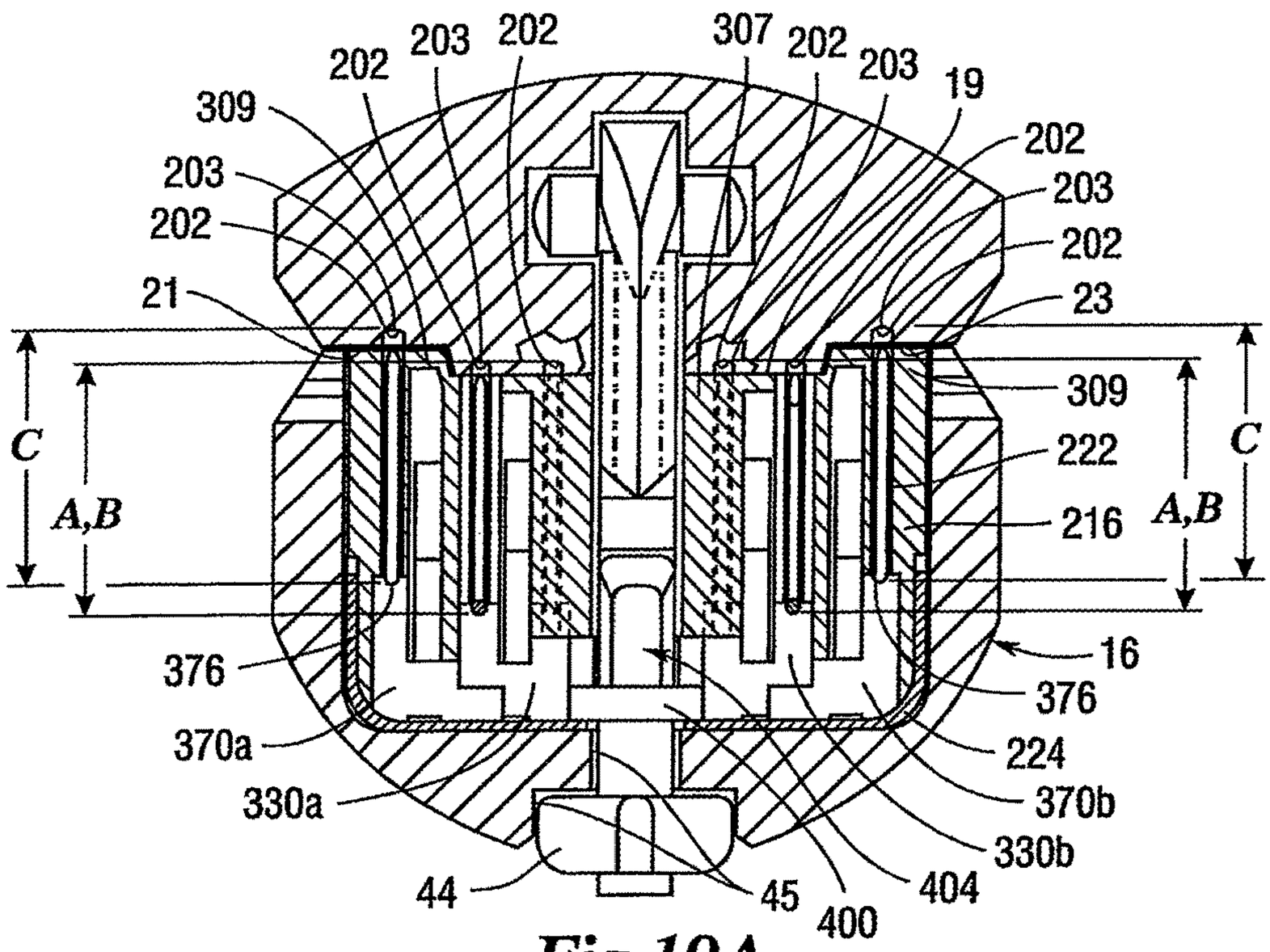


*Fig.19A*

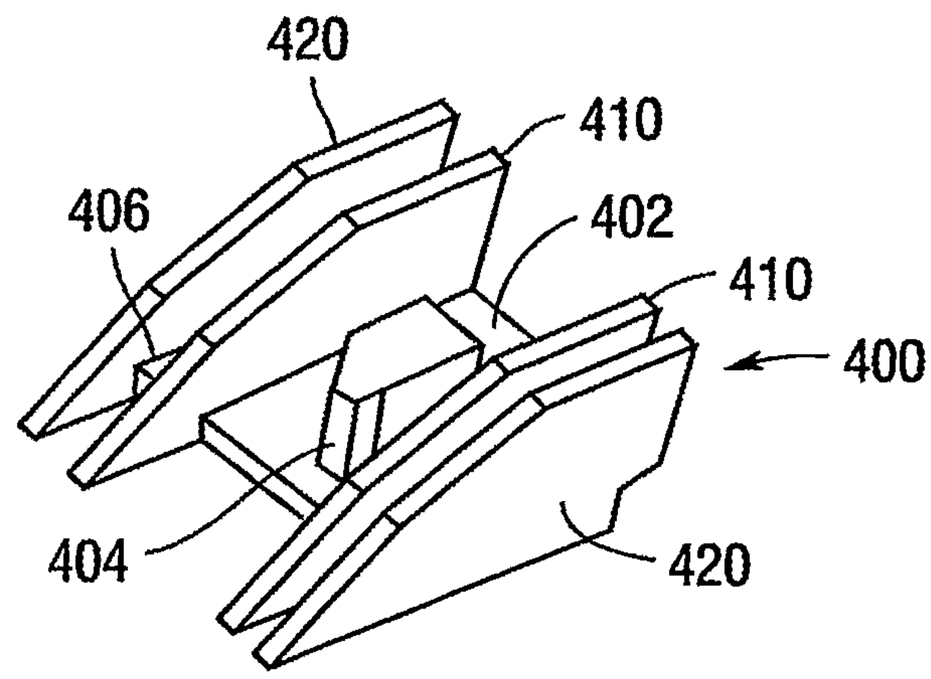


Fig.20

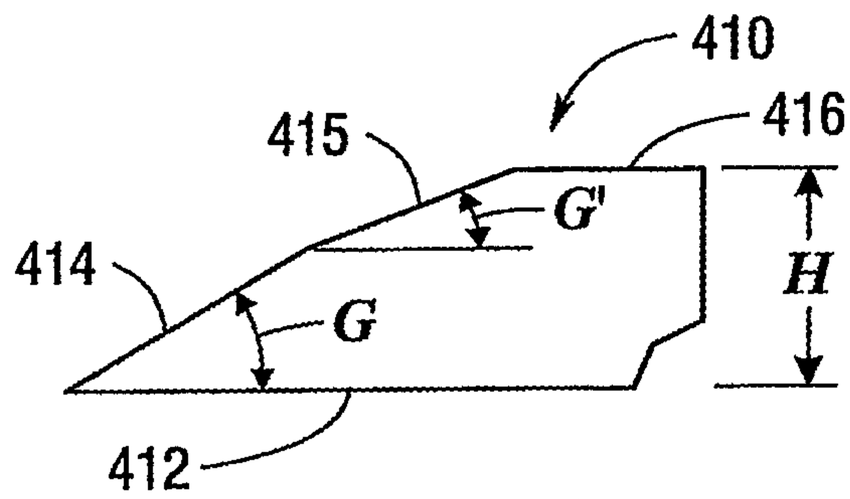


Fig.21

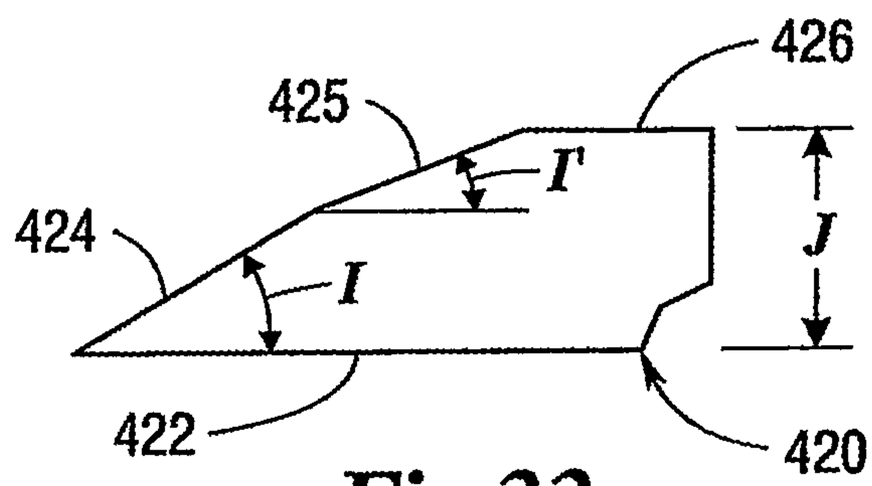


Fig.22

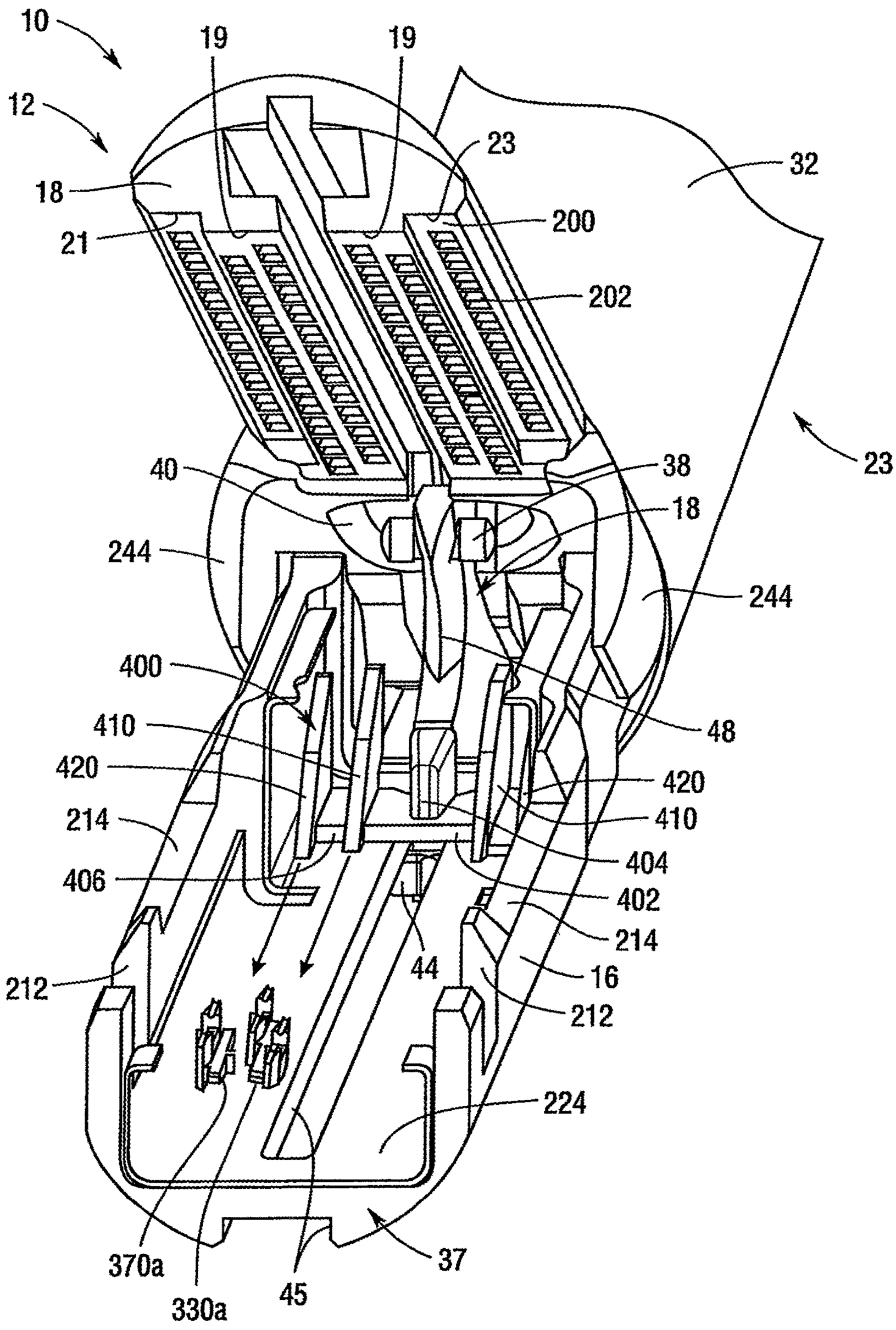
10
12
19
19
23
32
18
21
200
202
23
40
38
18
244
244
400
48
410
420
420
214
410
404
406
402
214
16
212
44
212
224
370a
330a
45
37

*Fig.23*

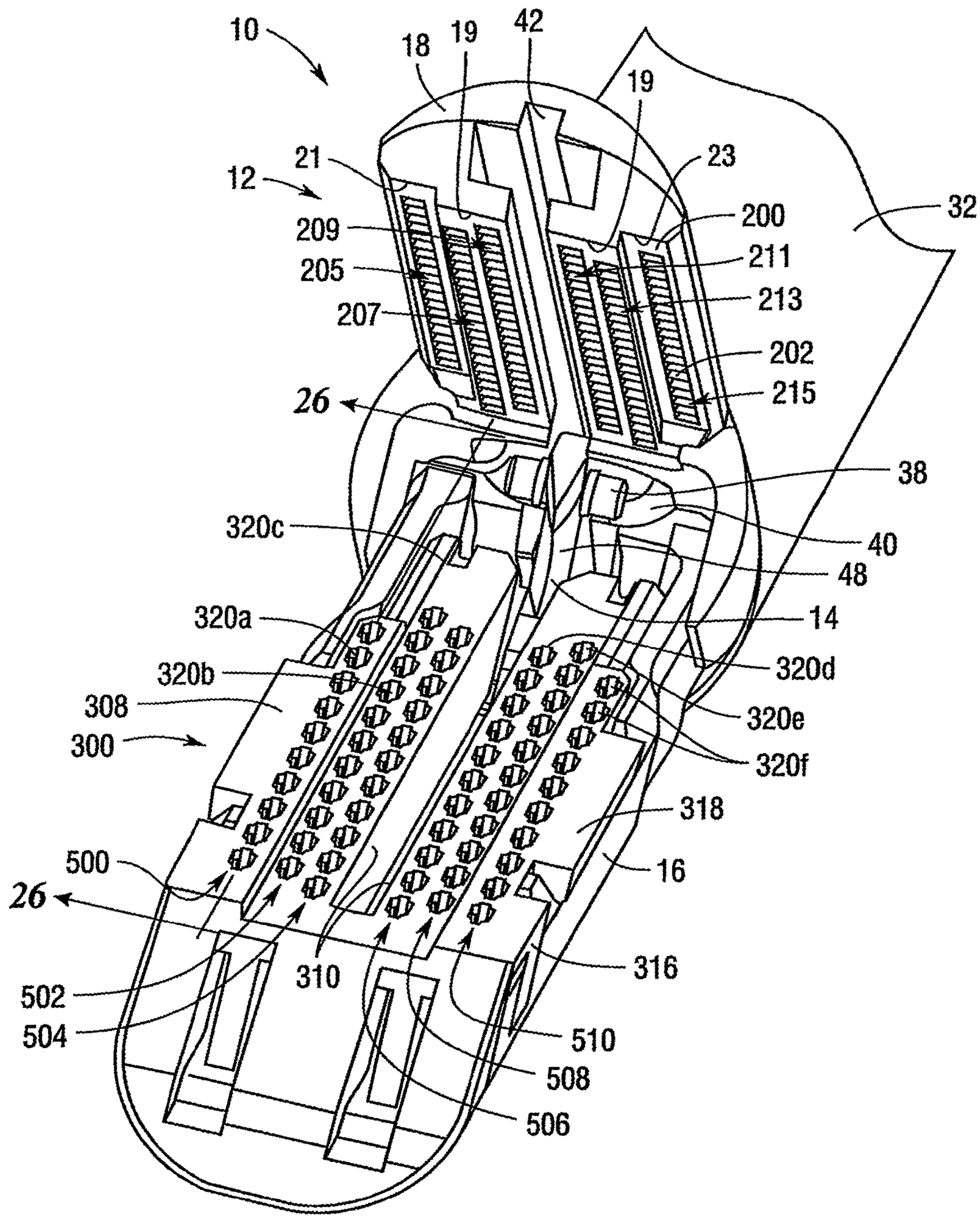
10
18
19
42
19
21
12
23
32
209
200
205
211
207
213
202
26
215
38
320c
40
48
320a
14
320b
320d
308
320e
300
320f
318
500
16
26
316
310
502
504
510
508
506

Fig.24

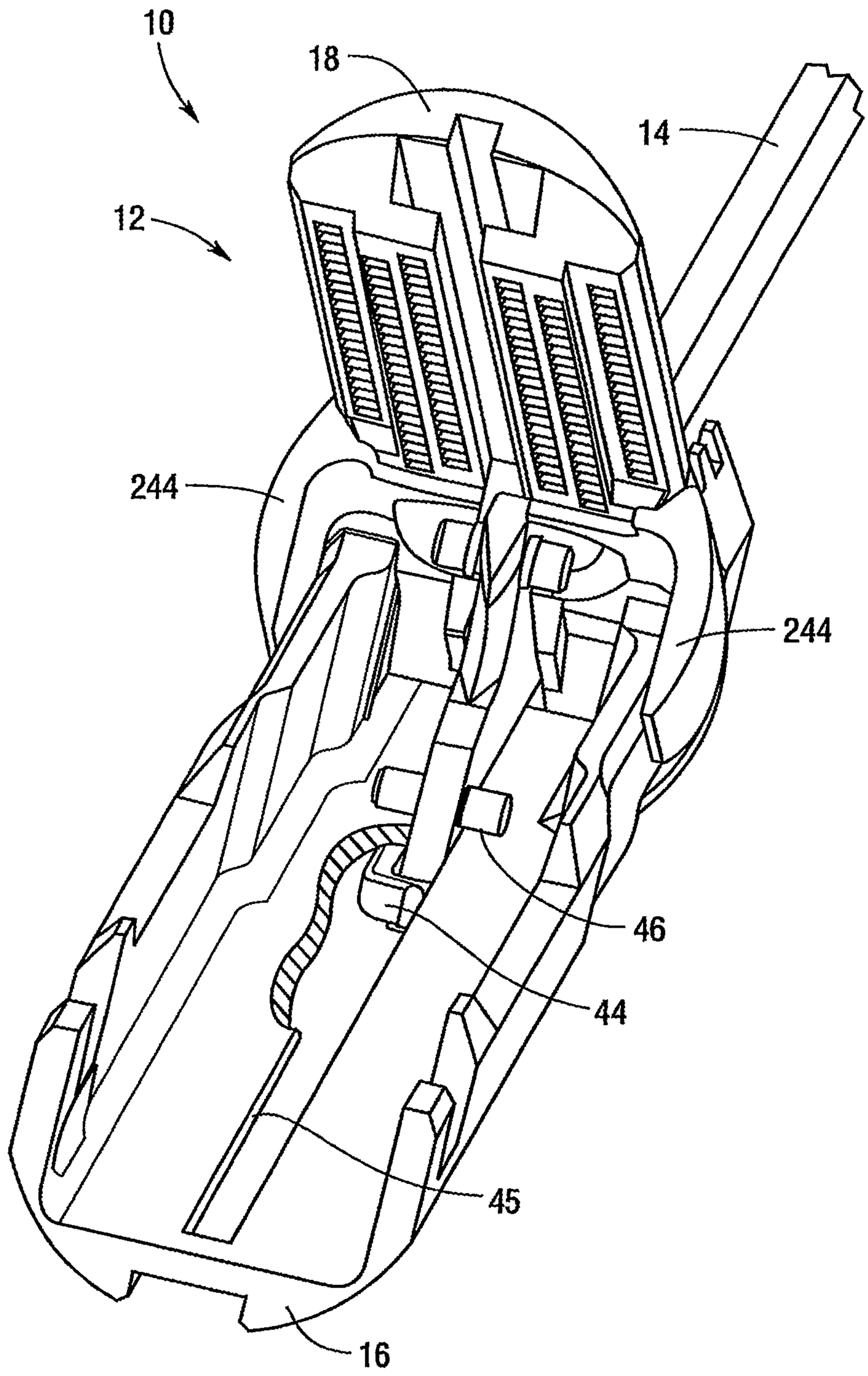


*Fig.25*

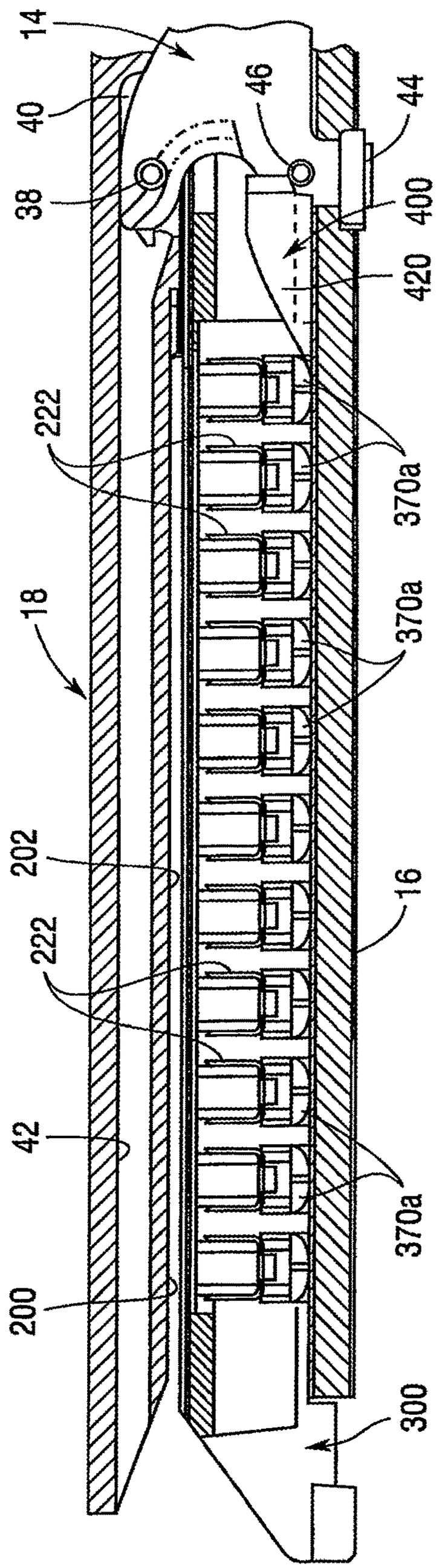


Fig.26

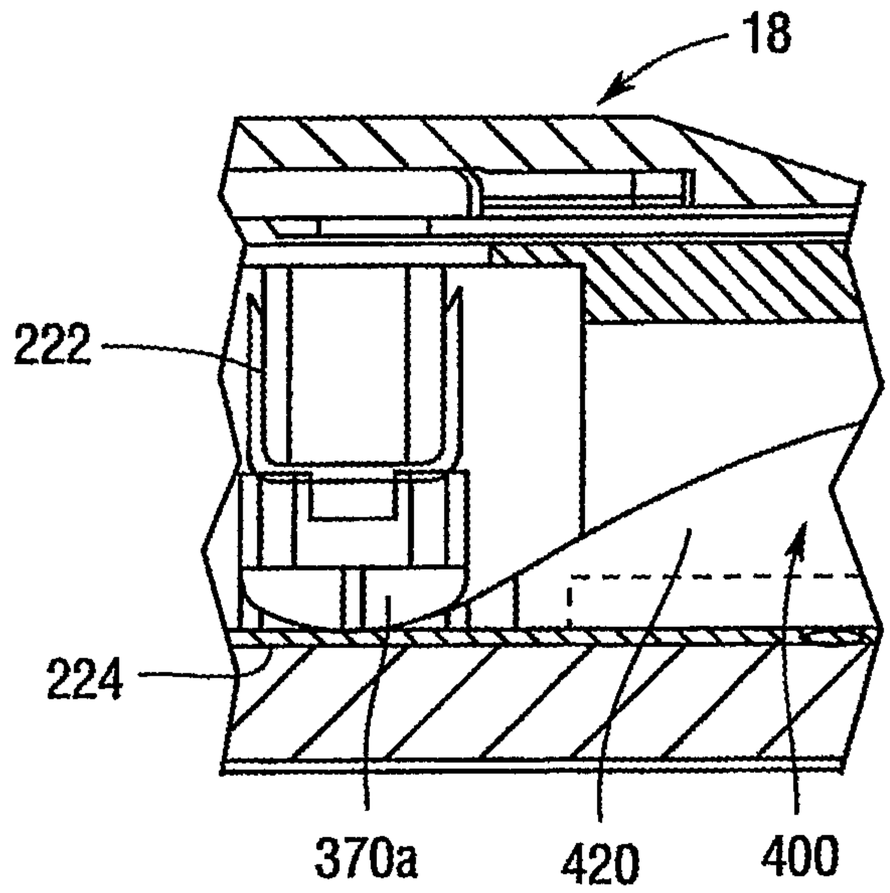
18
222
224
370a
420
400

*Fig.27*

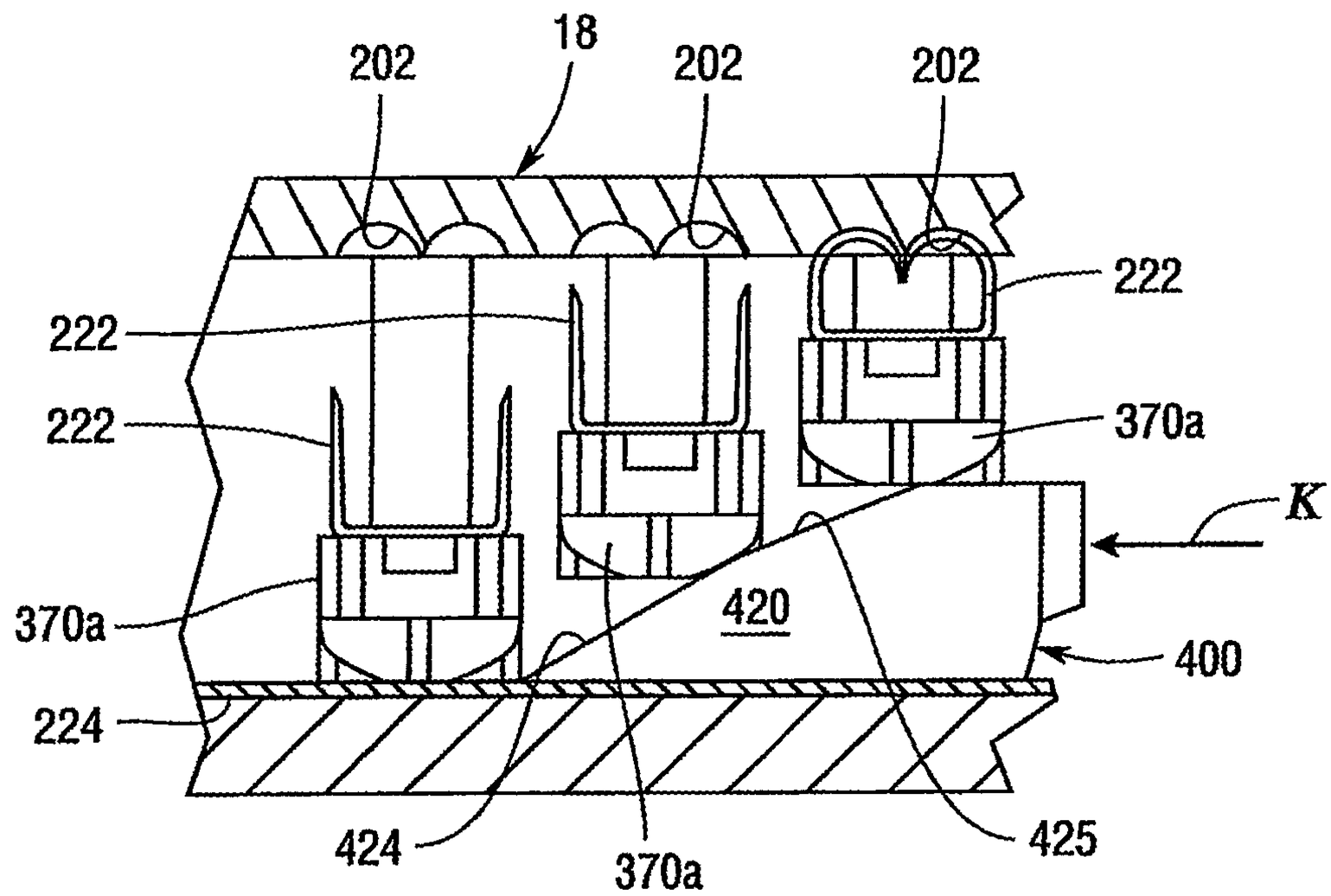
202
18
202
202
222
222
222
370a
K
370a
420
400
224
424
370a
425

*Fig.28*

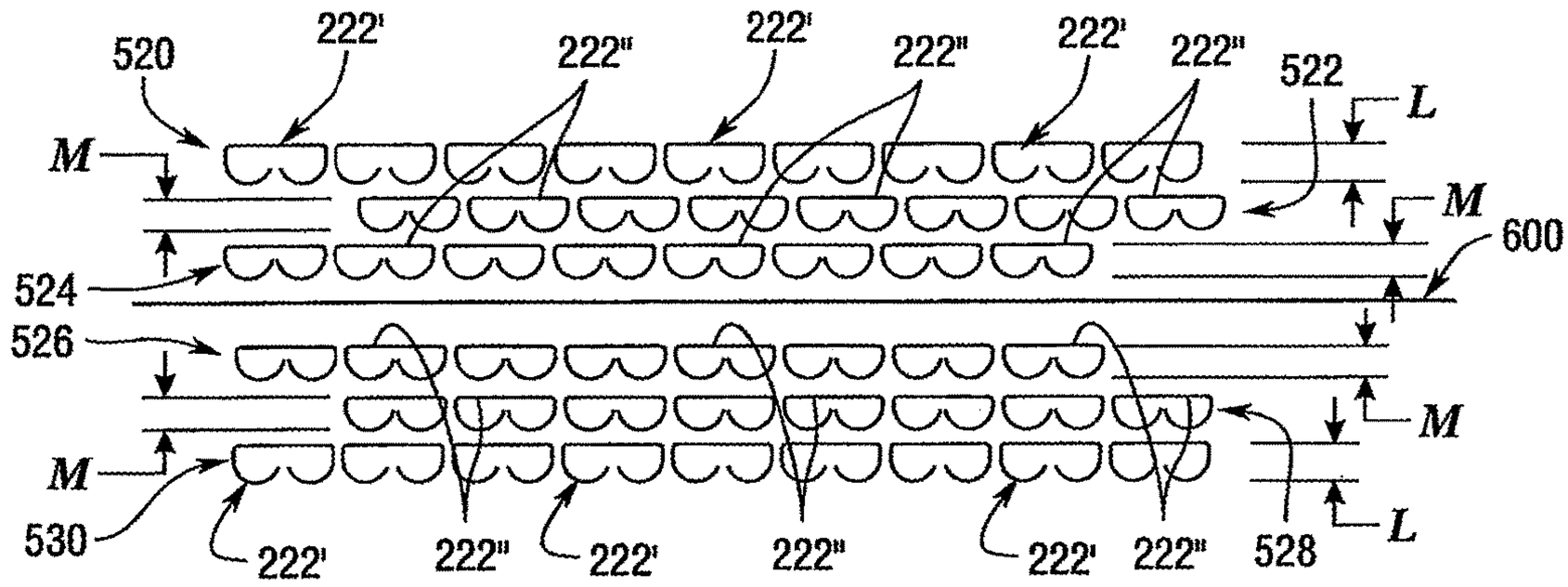


Fig.29

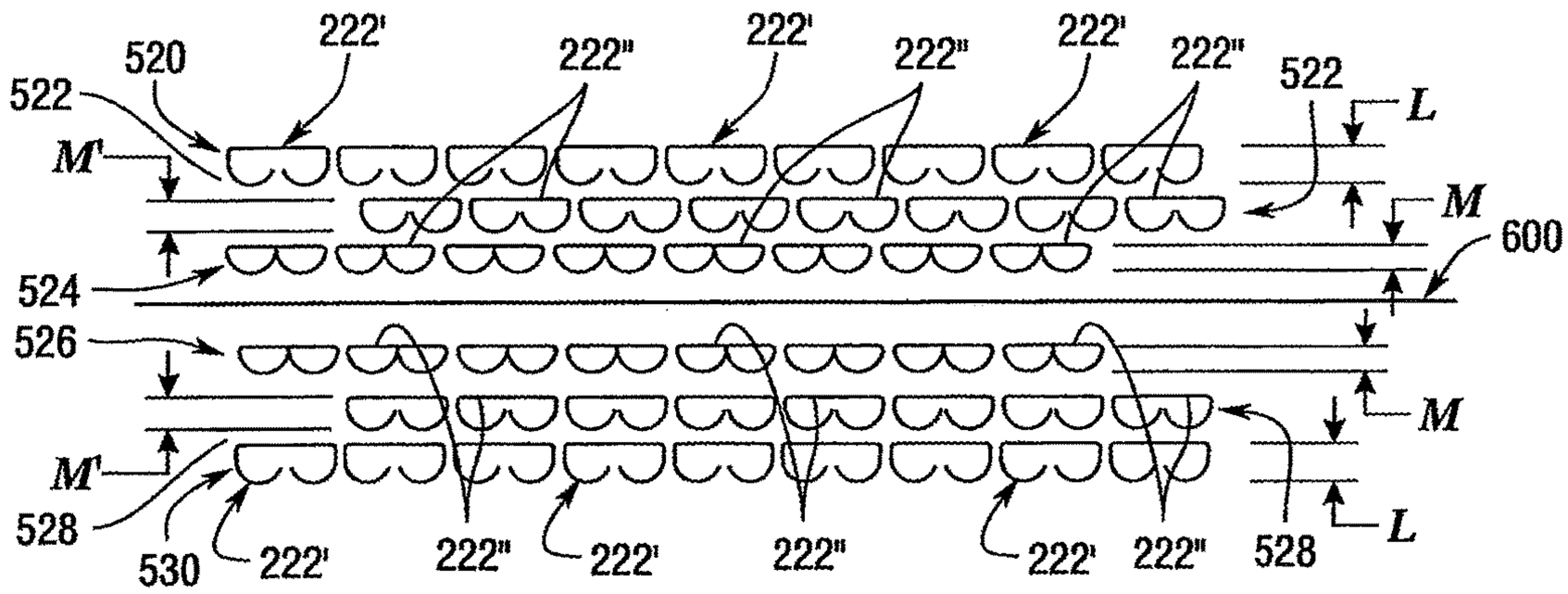


Fig.32

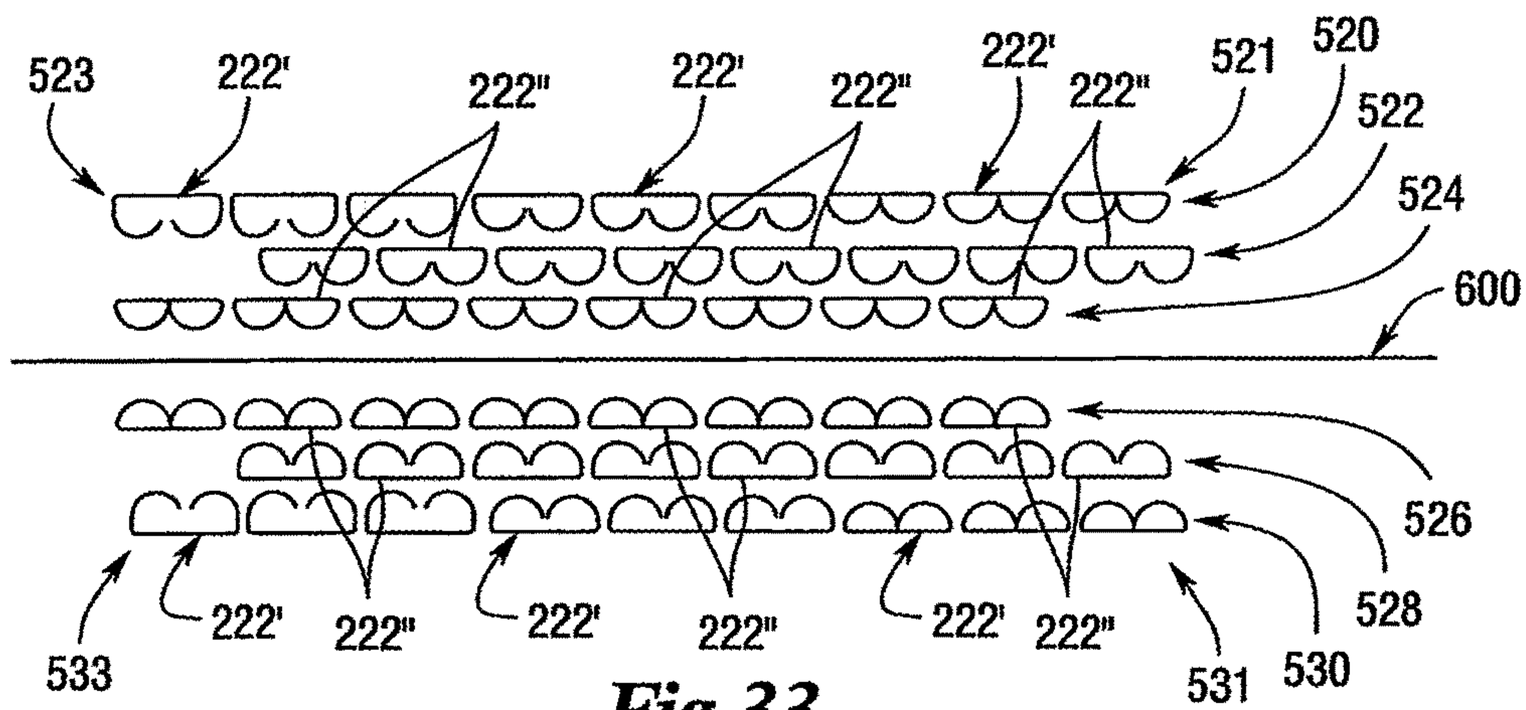


Fig.33

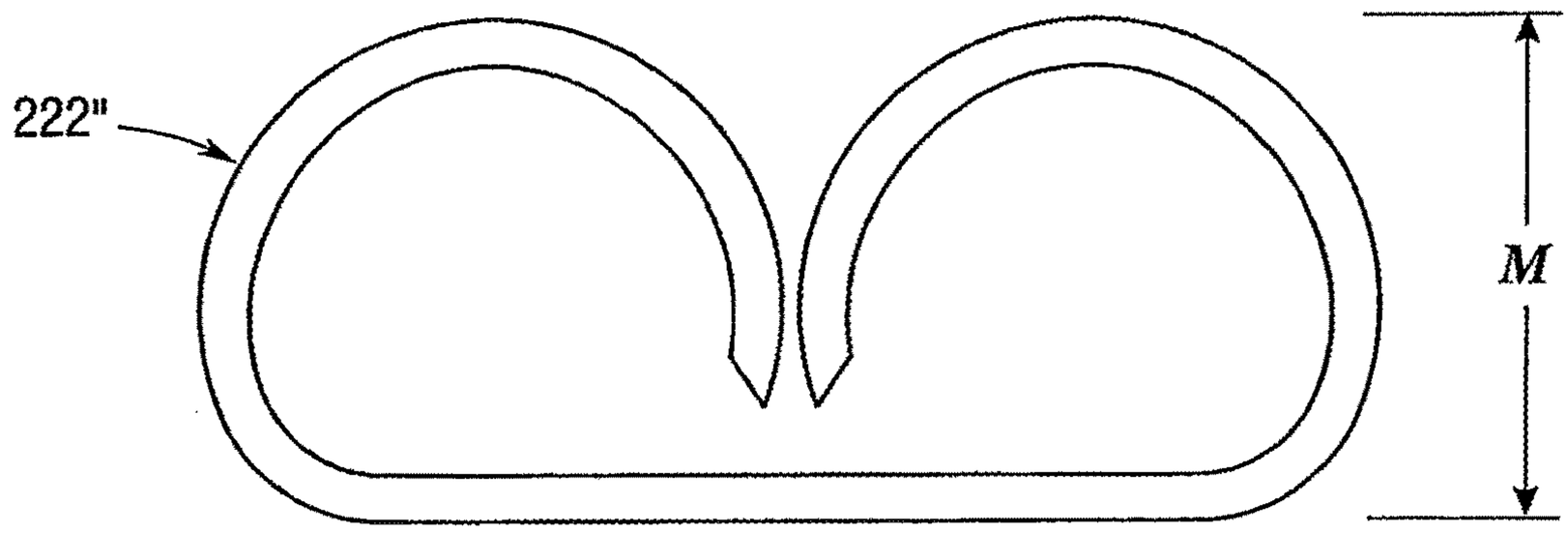


*Fig.31*

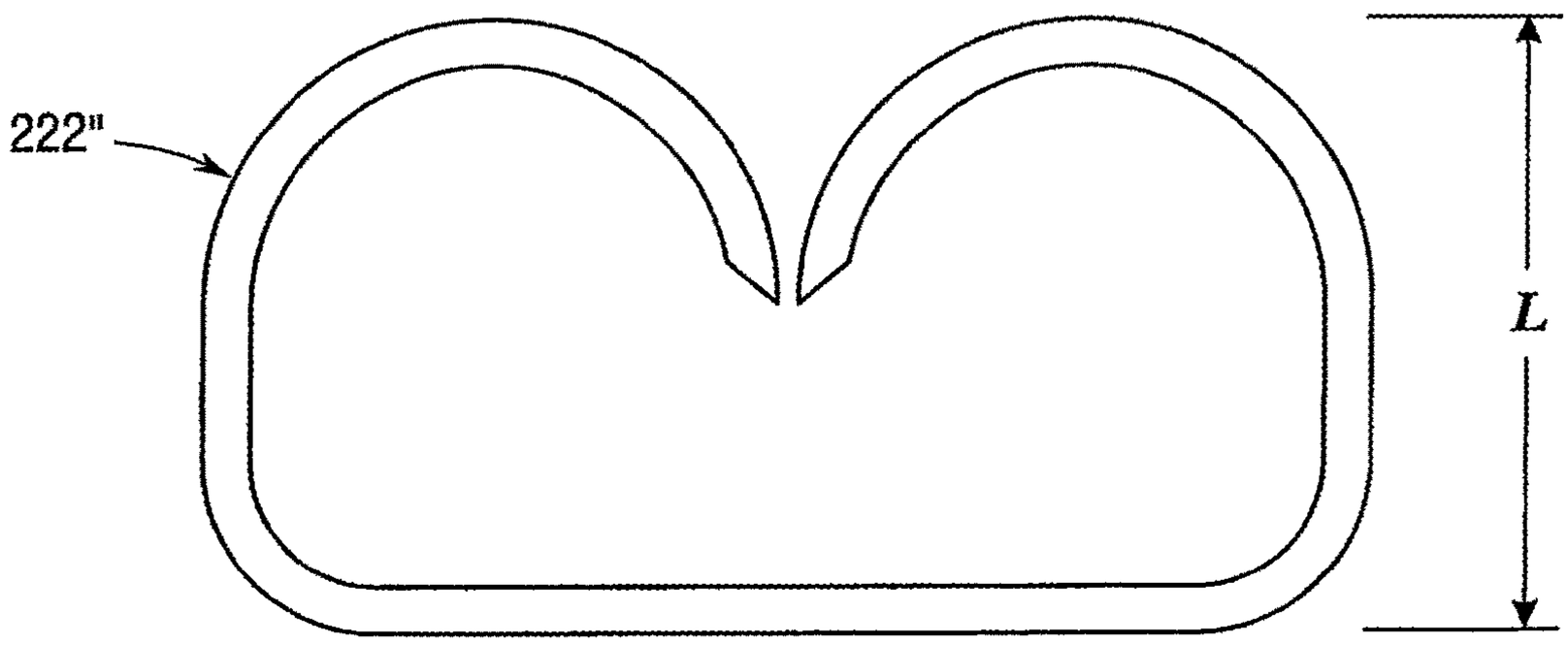


*Fig.30*

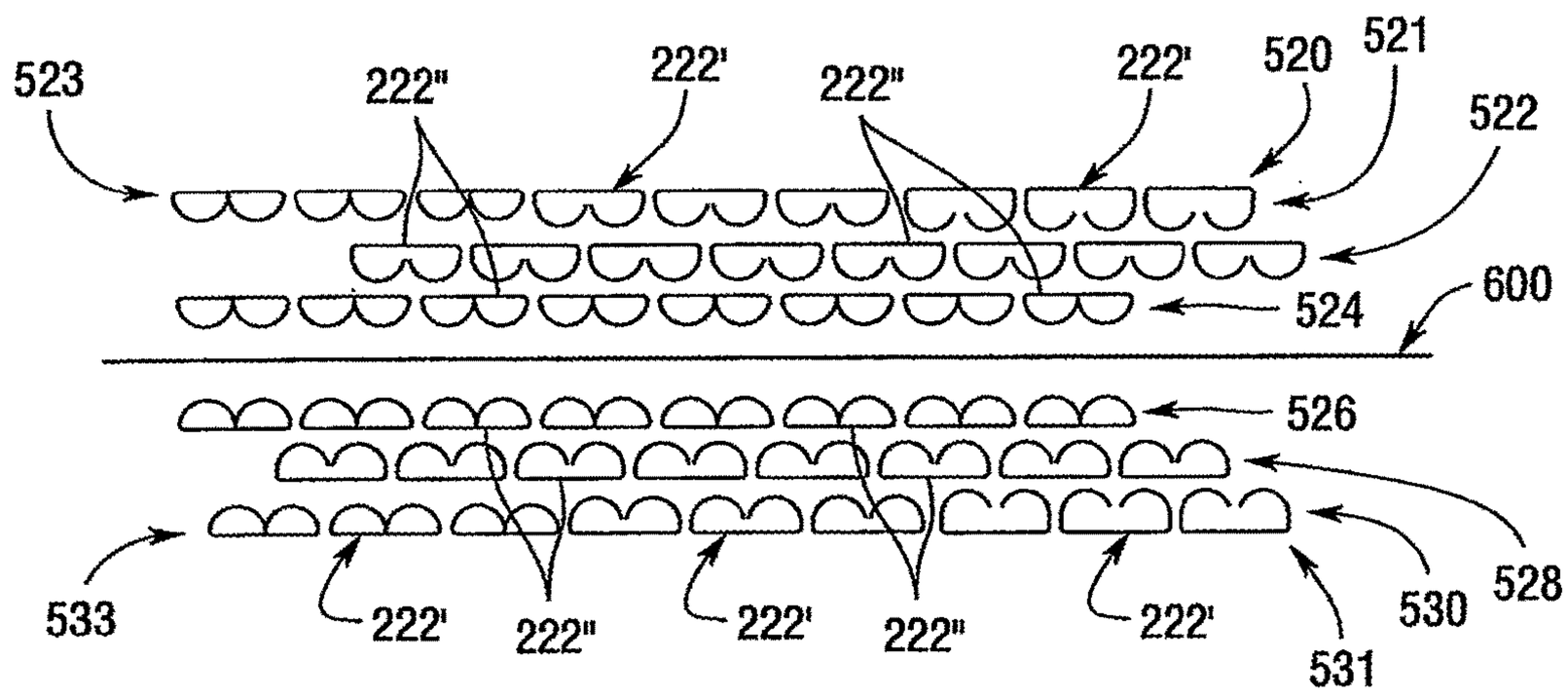
523
222"
222'
222"
222'
520
521
522
524
600
526
528
530
531
533
222'
222"
222'
222"
222'

*Fig.34*

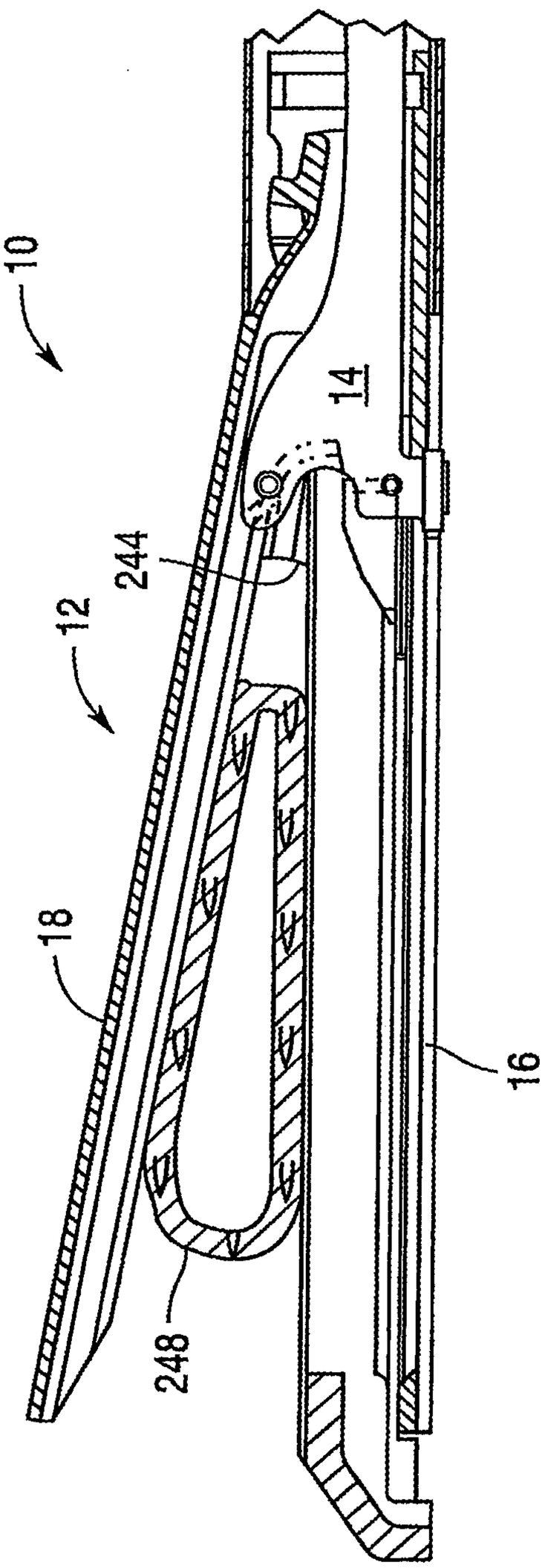


Fig.35

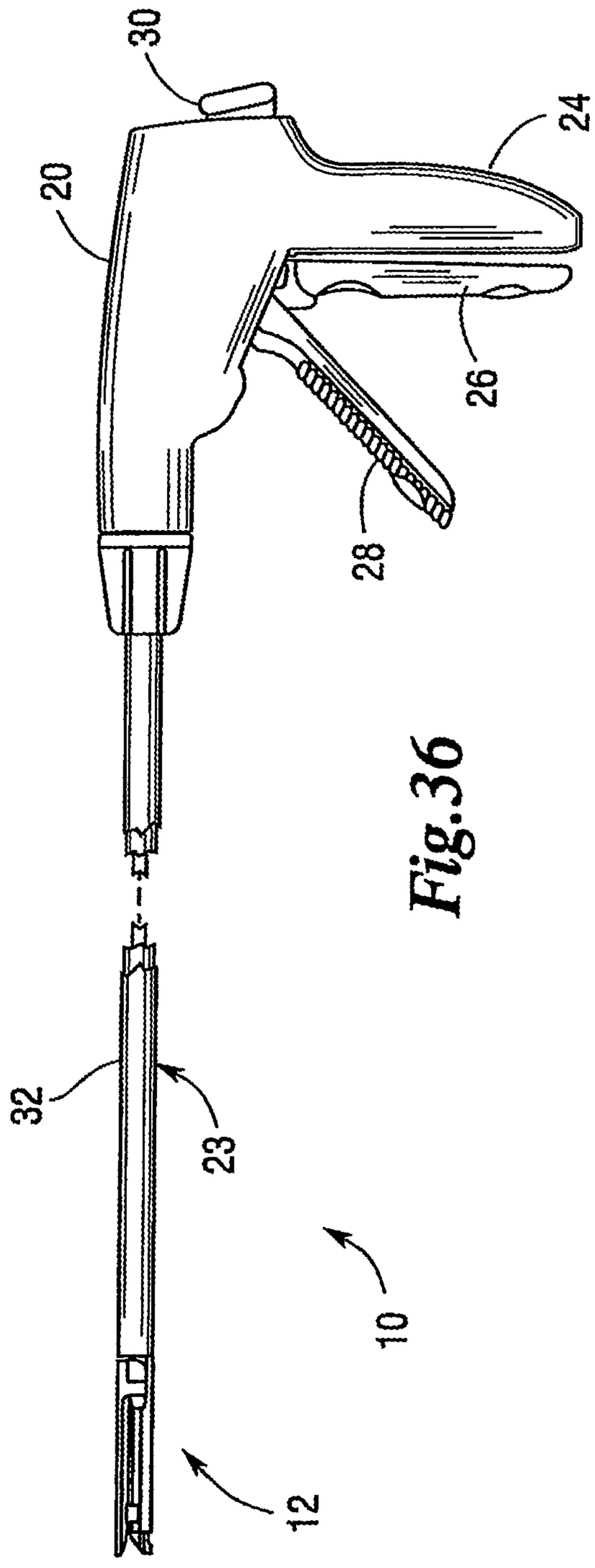


Fig.36

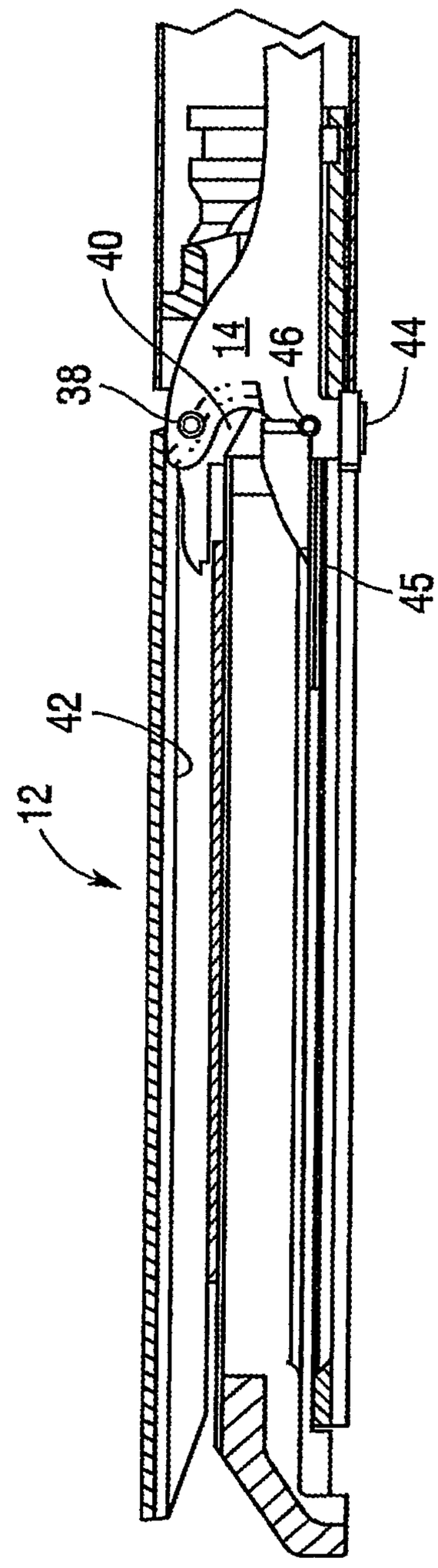


Fig.37

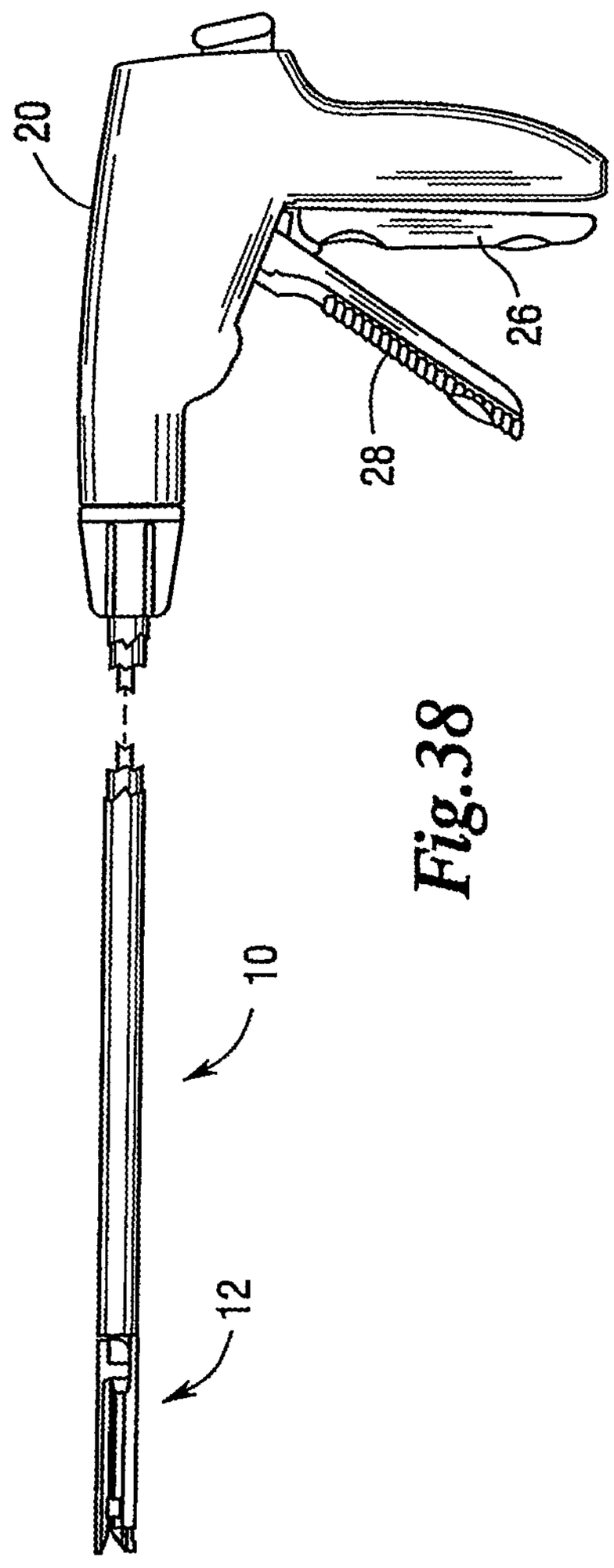


Fig.38

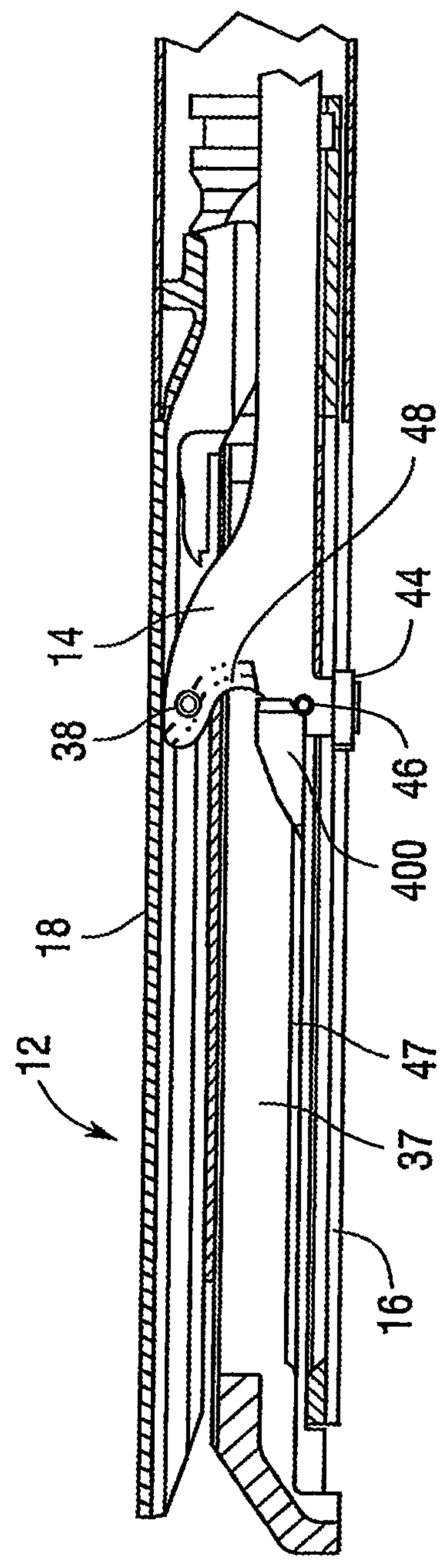


Fig.39

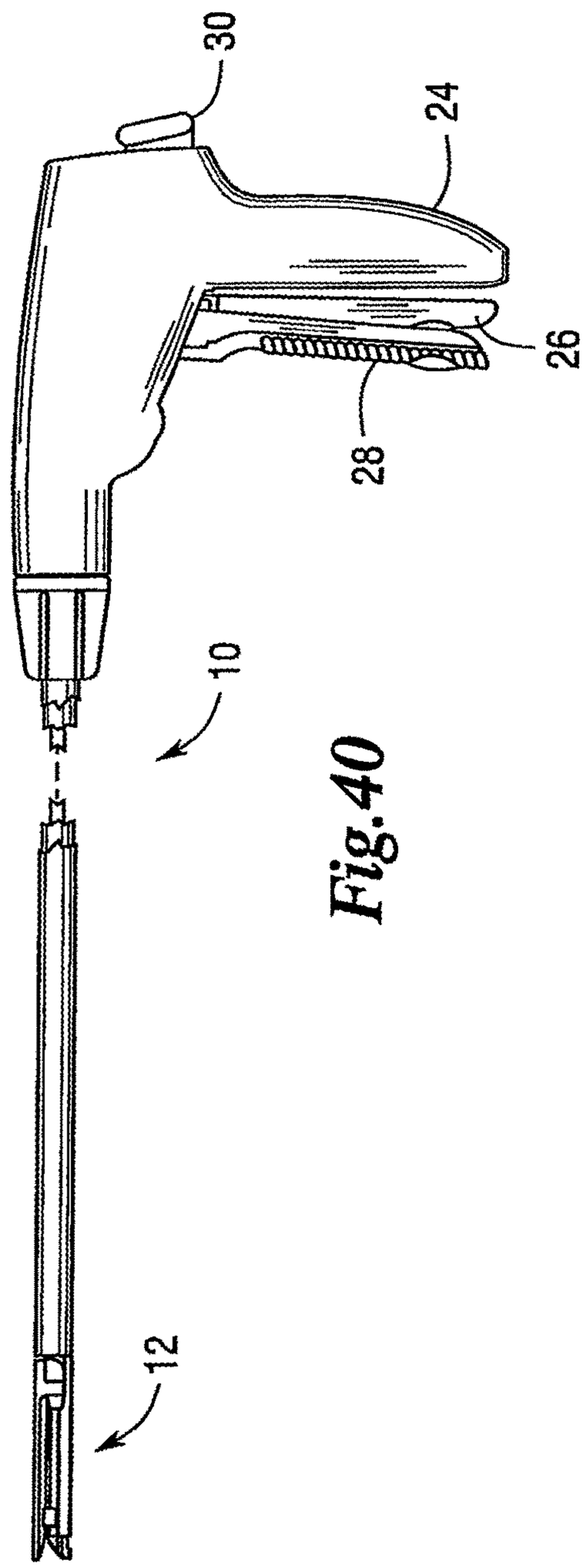


Fig.40

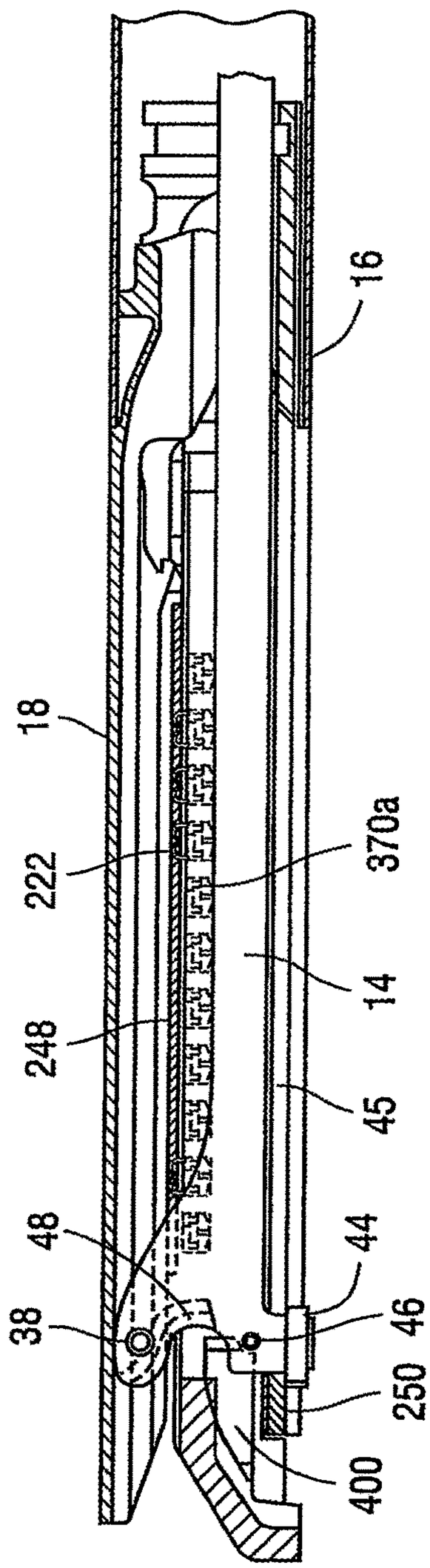


Fig.41

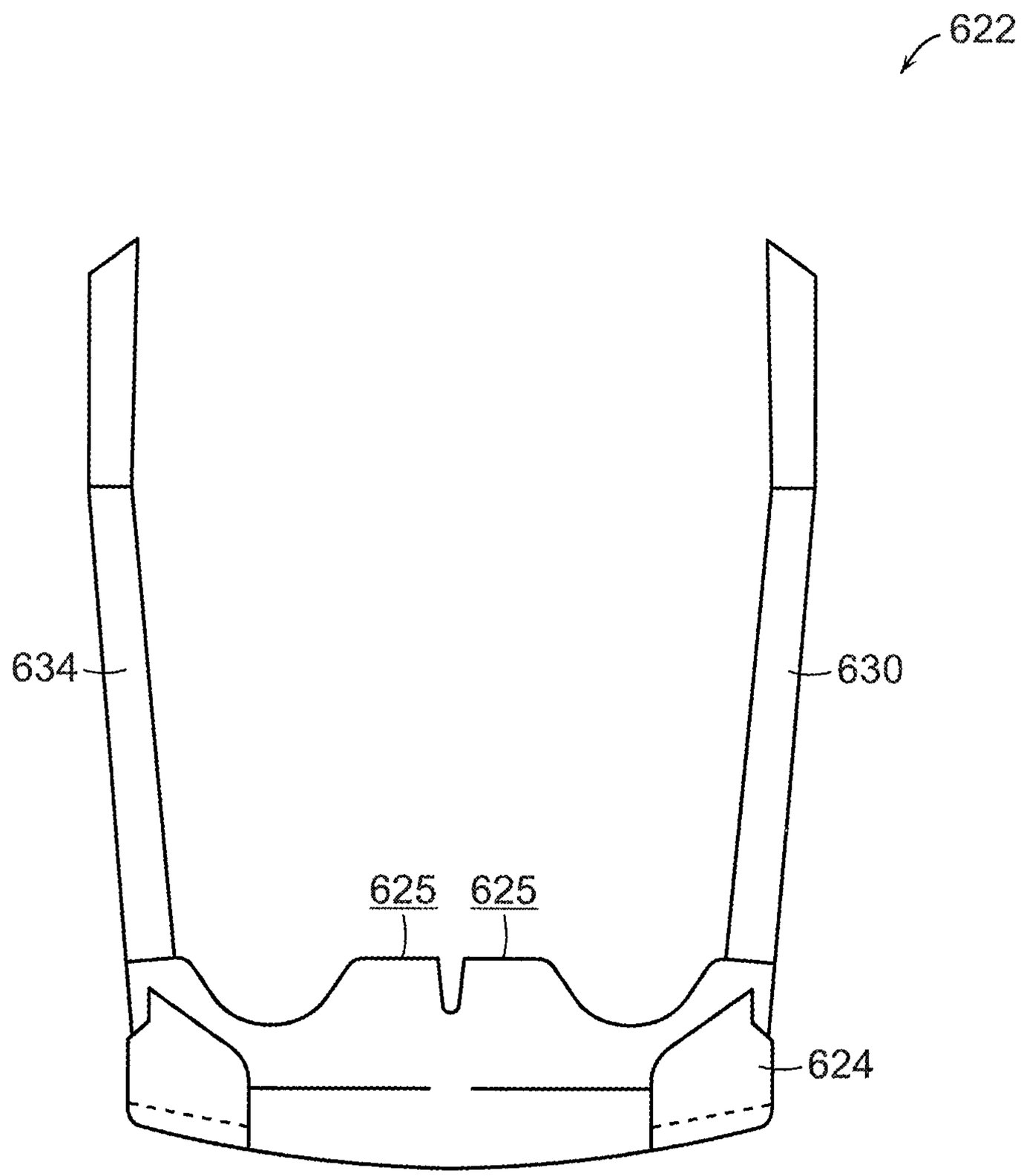


FIG. 42

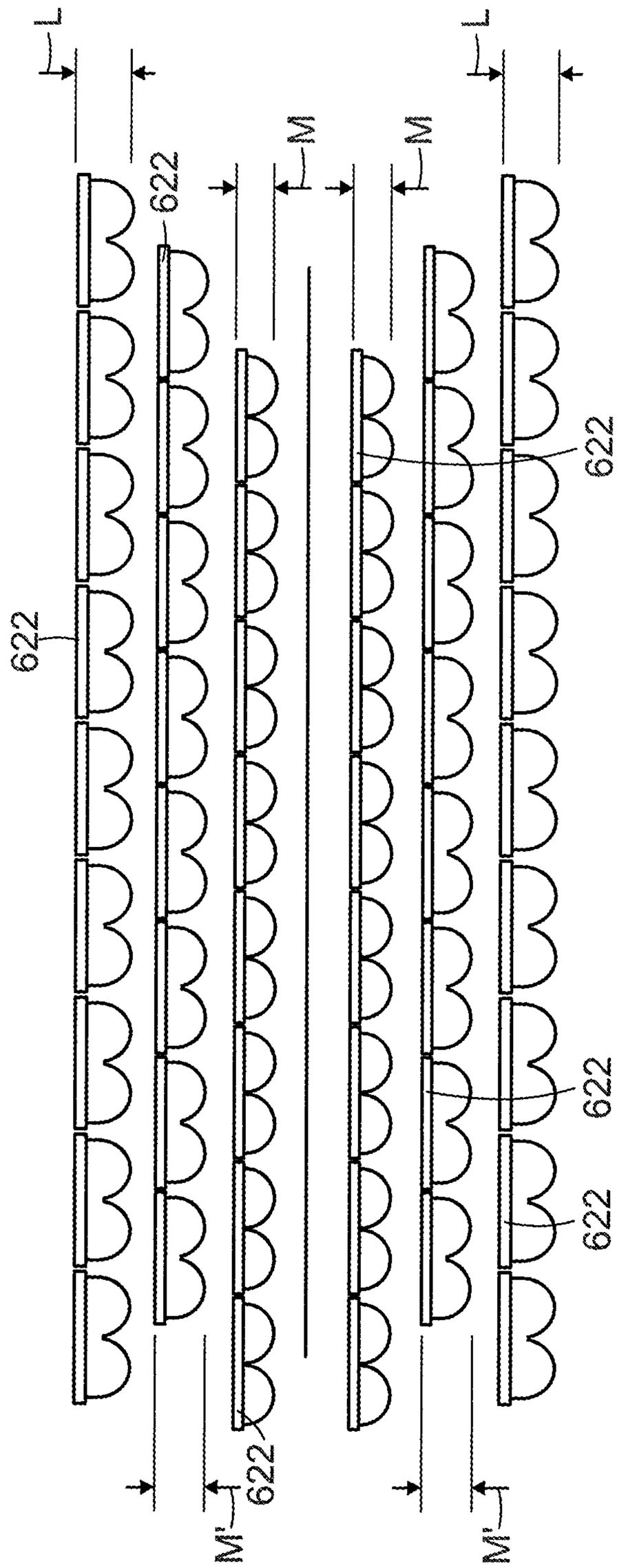


FIG. 43

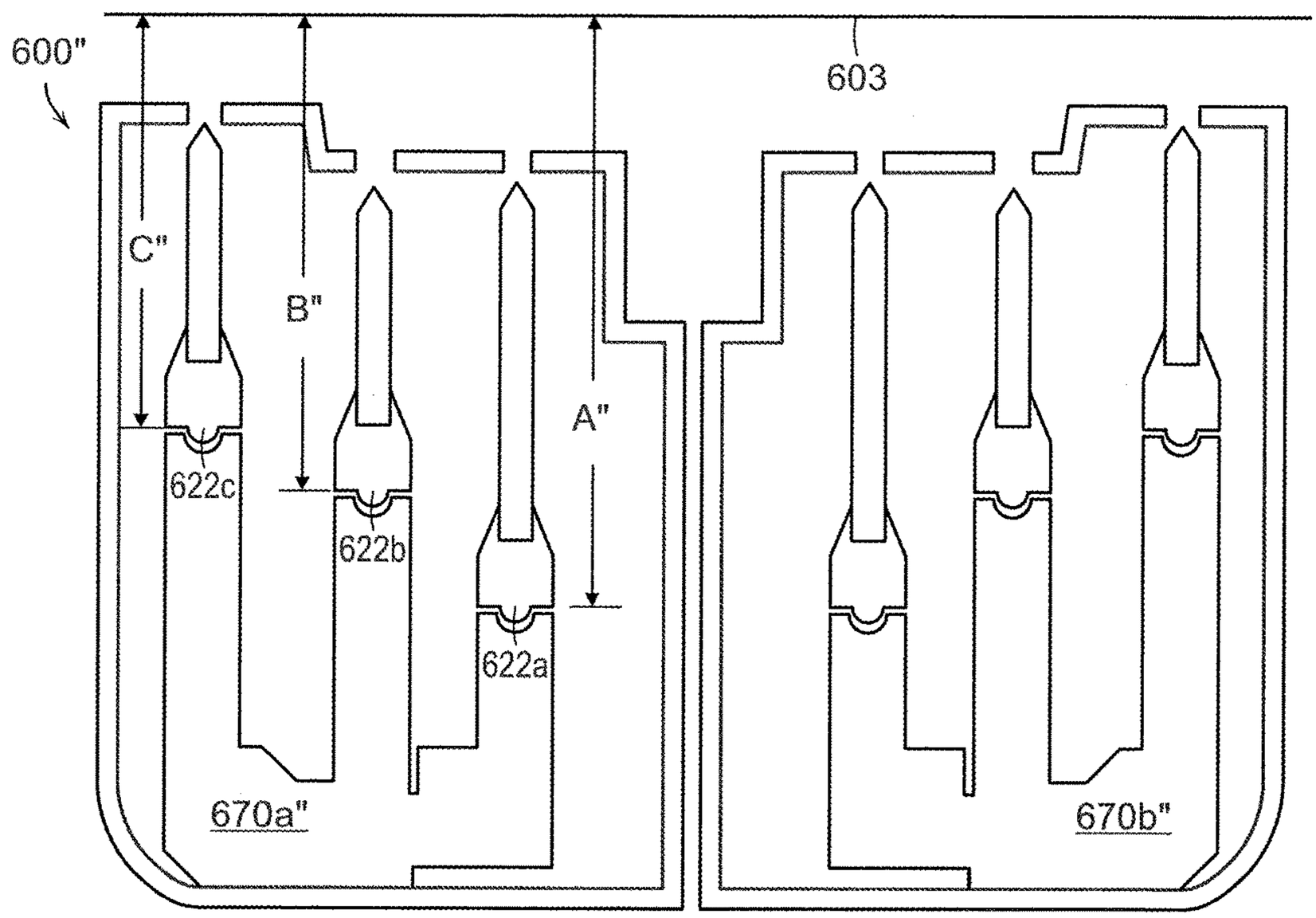
600"
603
C"
B"
A"
622c
622b
622a
670a"
670b"

FIG. 44

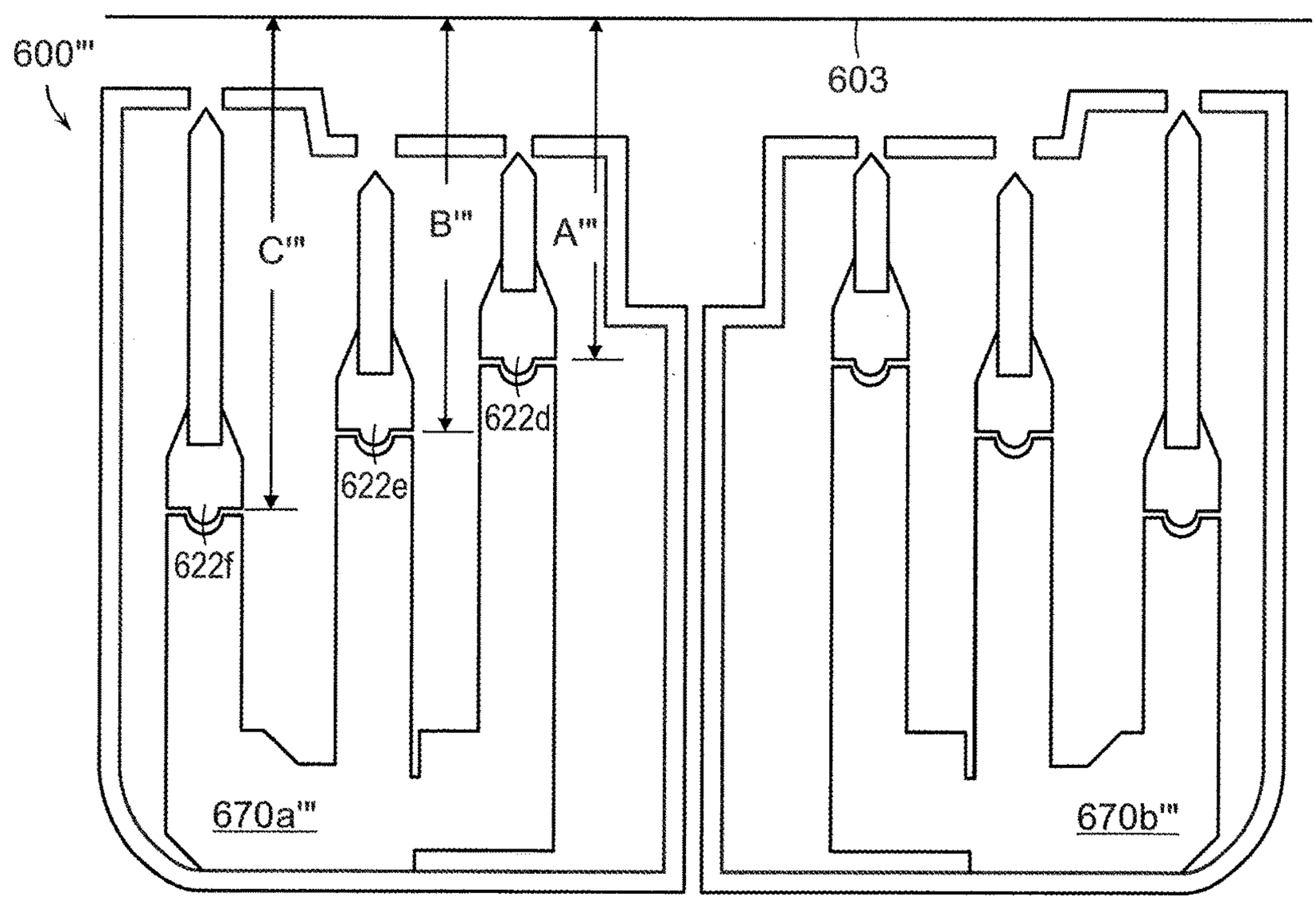
600'''
603
C'''
B'''
A'''
622d
622e
622f
670a'''
670b'''

FIG. 45

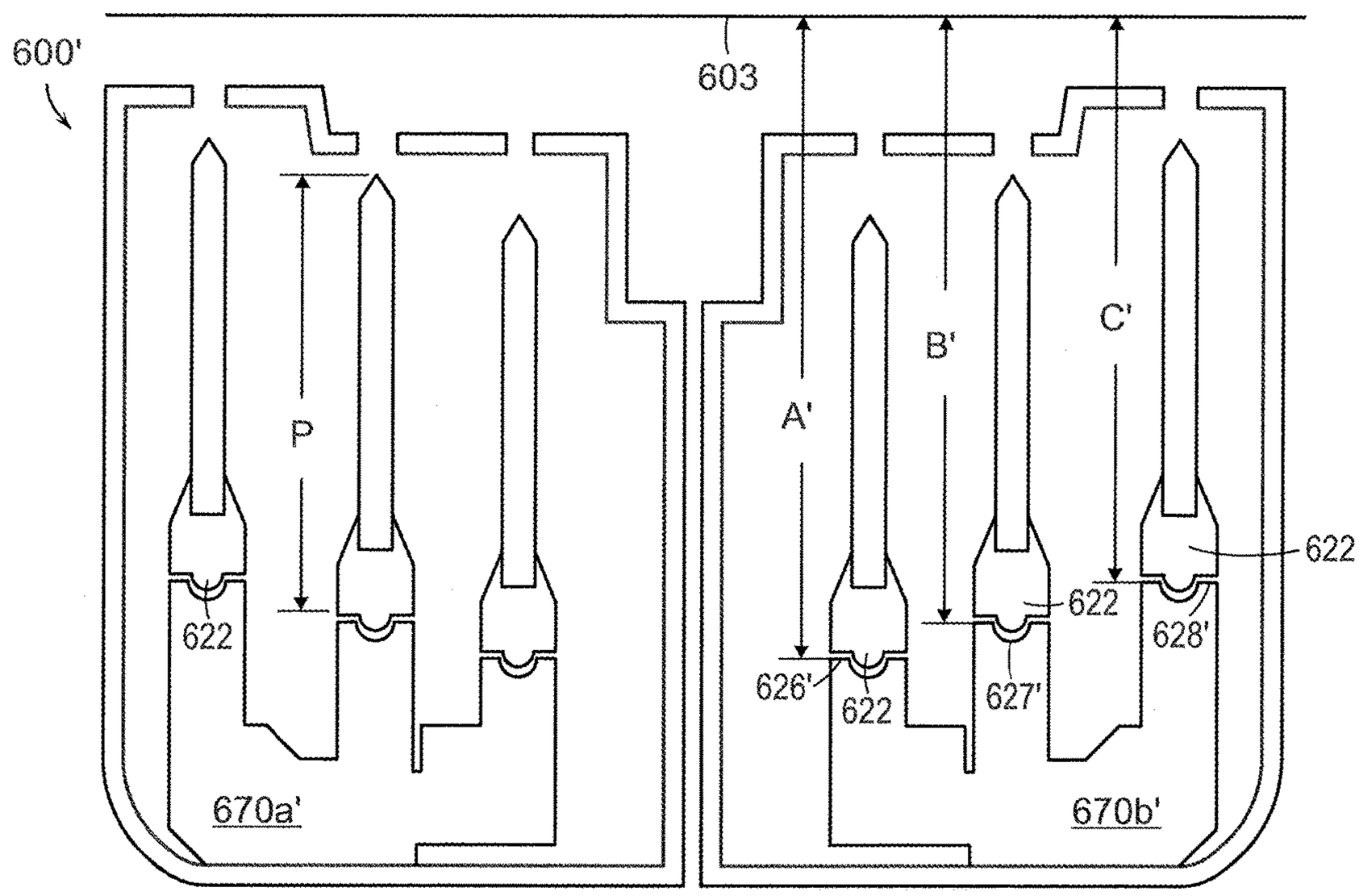
600'
603
P
A'
B'
C'
622
622
622
628'
626'
622
627'
670a'
670b'

FIG. 46

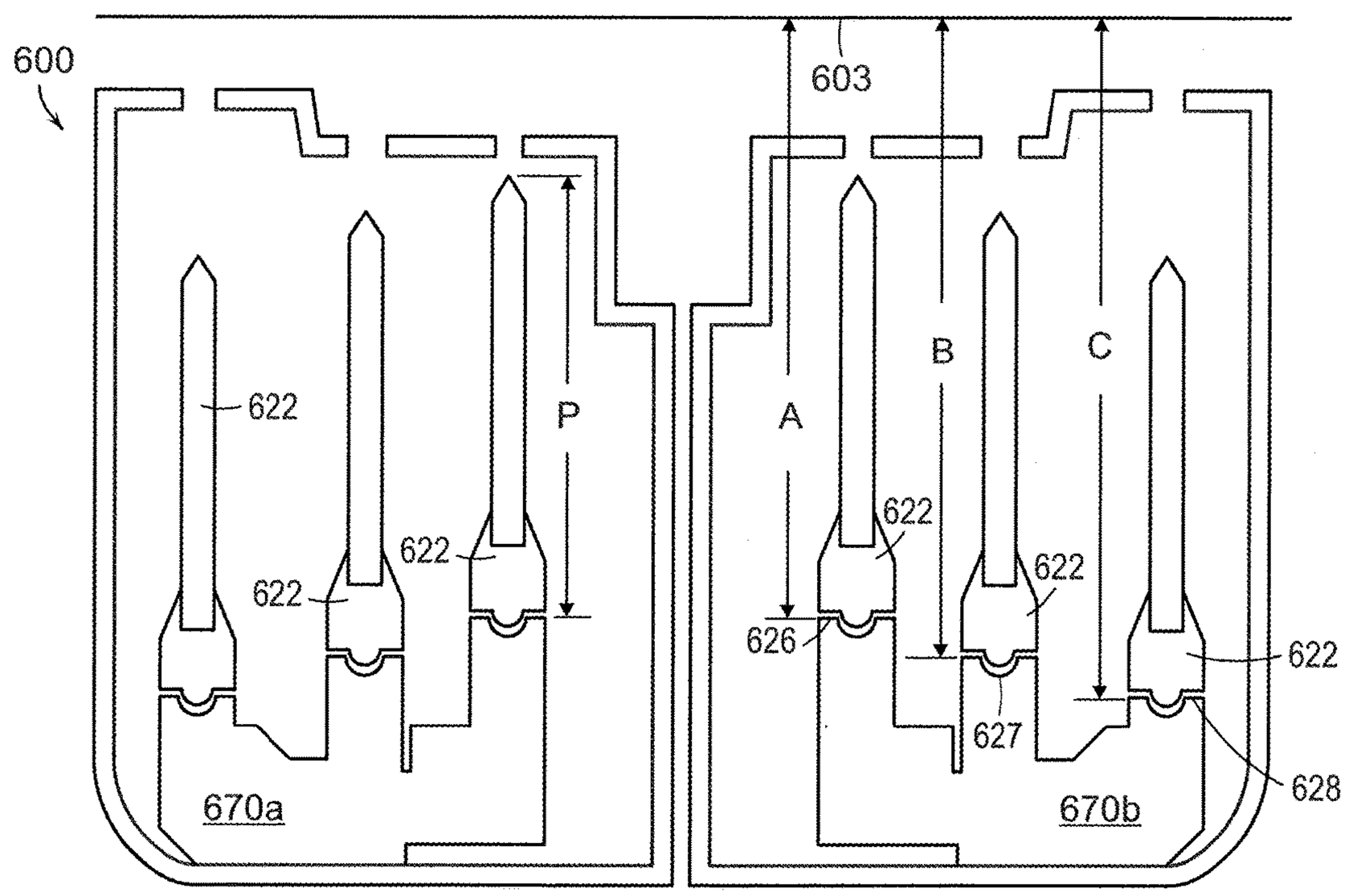
600
603
622
P
A
B
C
622
622
622
622
626
622
627
628
670a
670b

FIG. 47

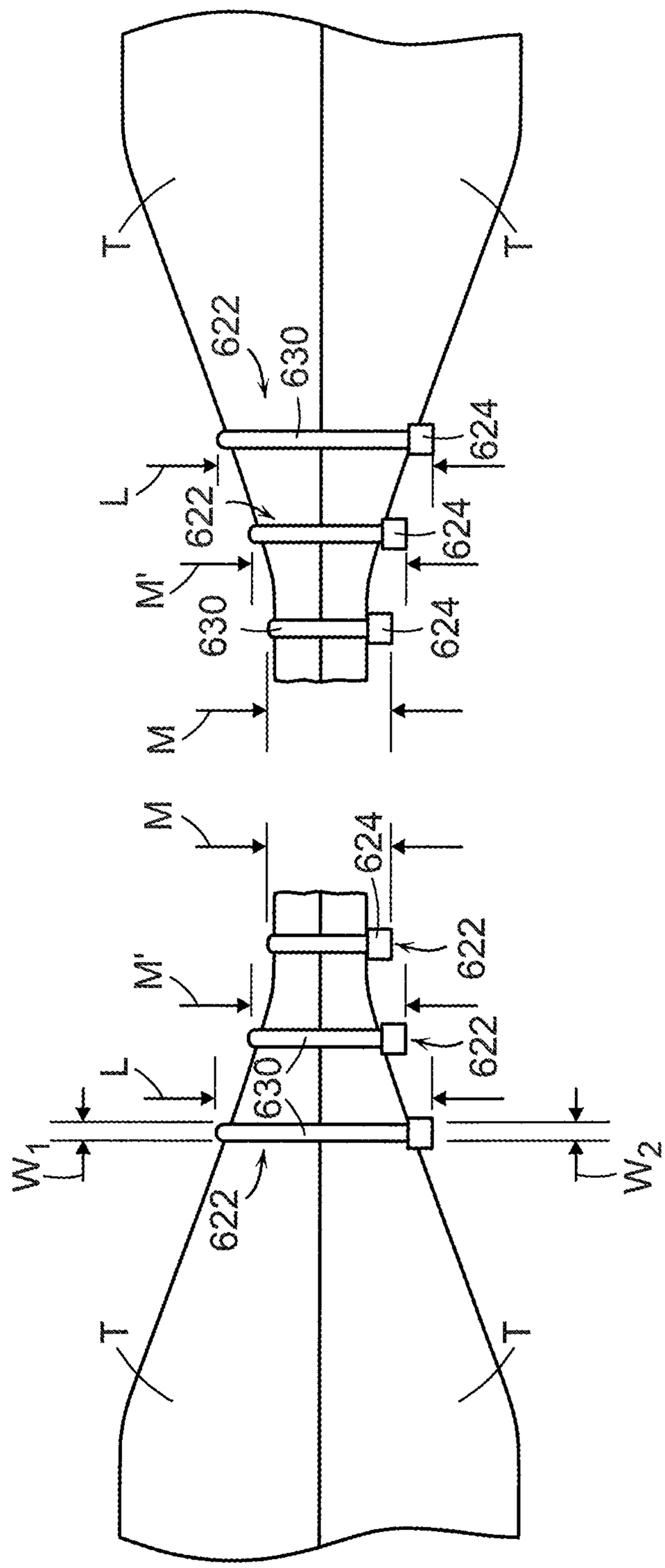
T
622
630
L
622
M'
630
M
624
624
624
T
M
624
M'
622
L
630
622
$W_1$
622
$W_2$
T
T

FIG. 48

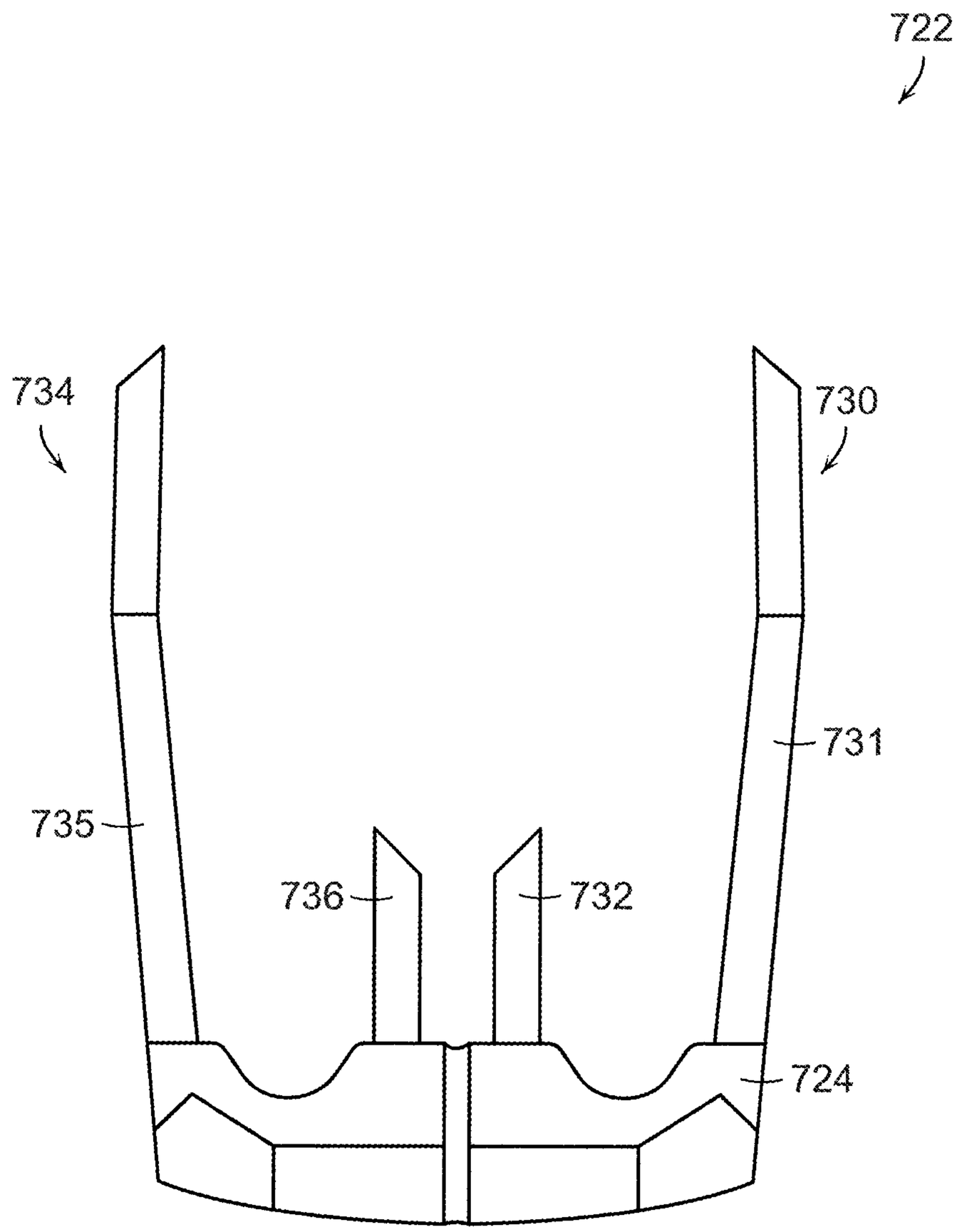


FIG. 49

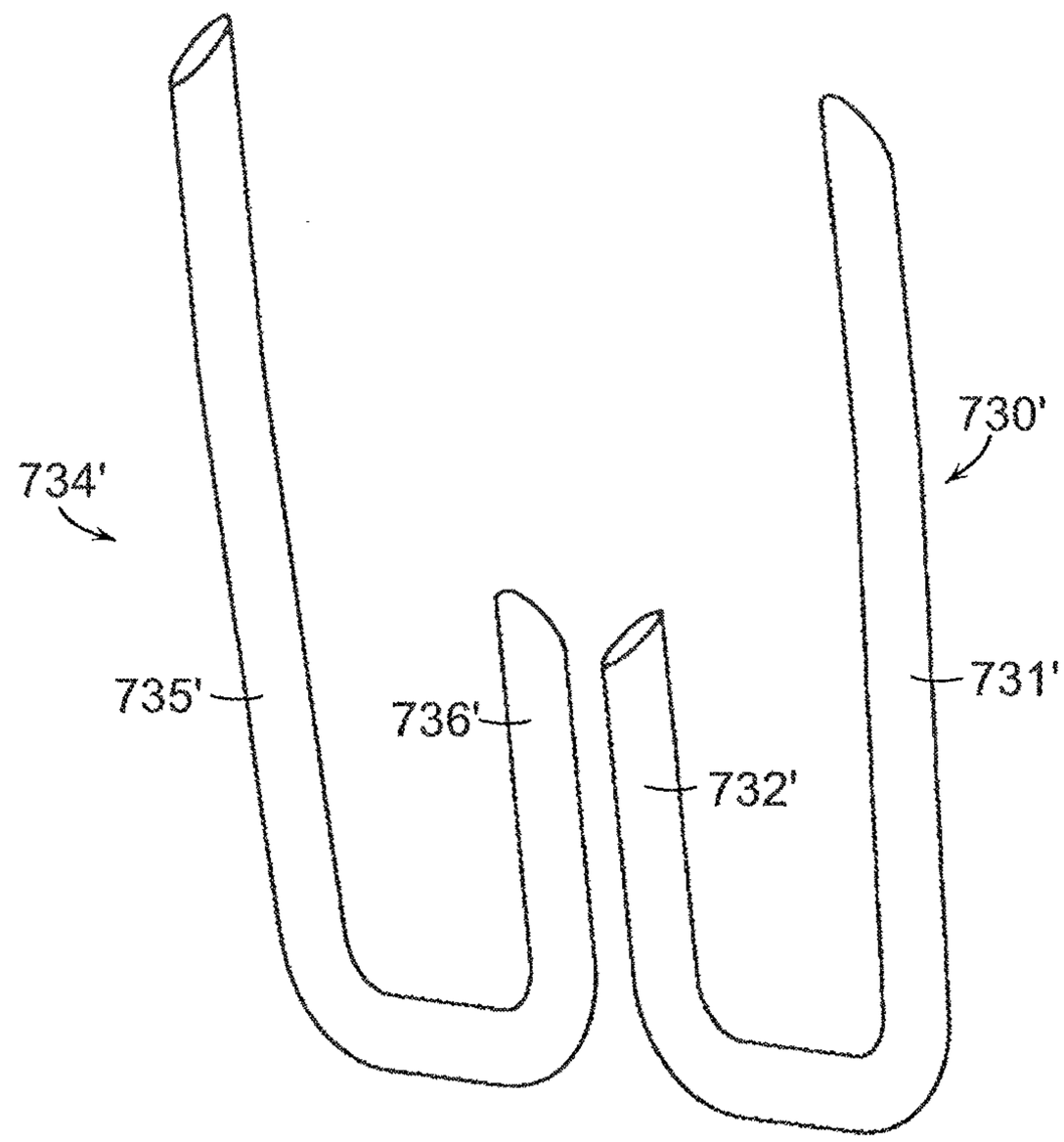
730'
734'
735'
736'
731'
732'

FIG. 50

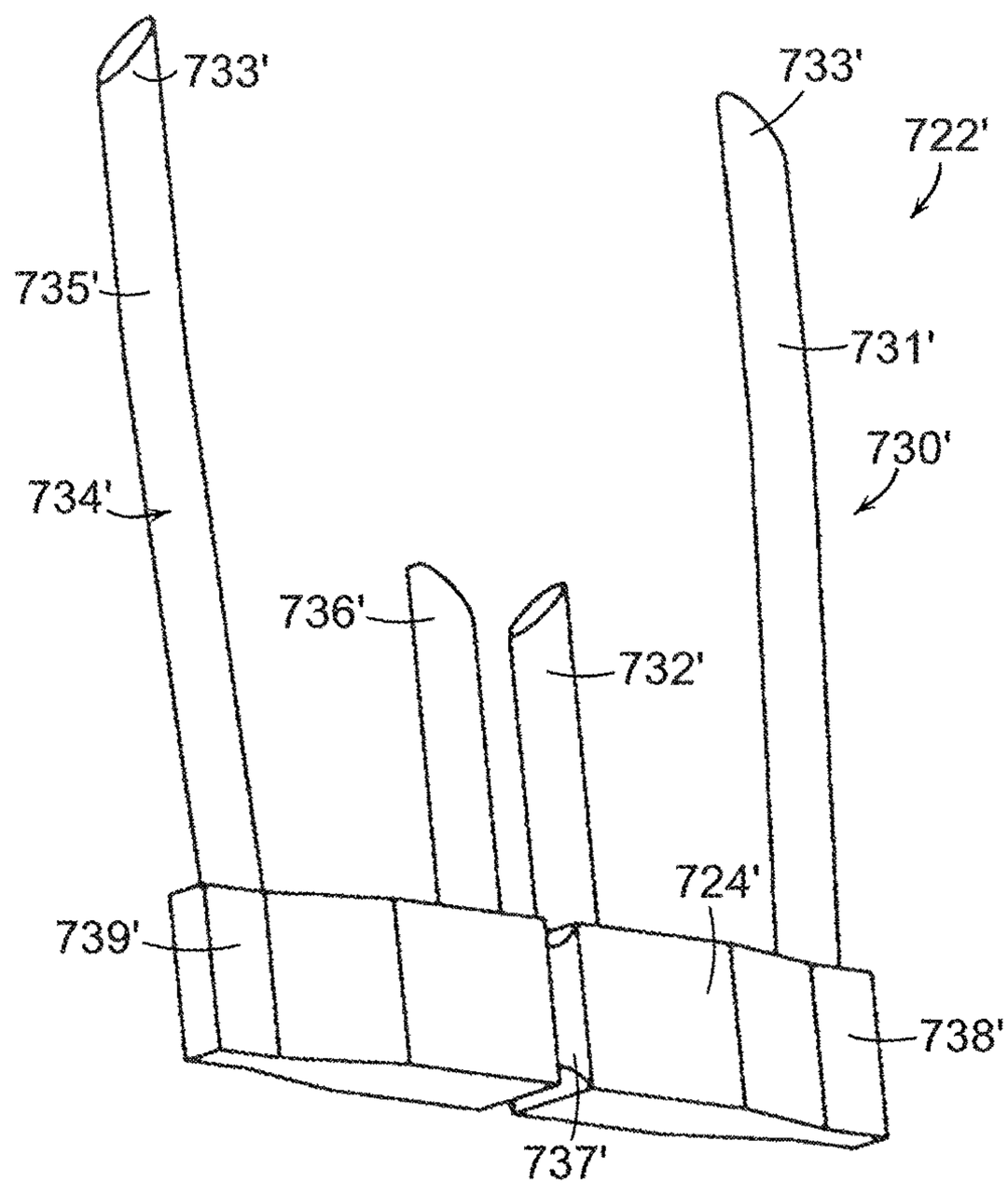
733'
733'
722'
735'
731'
730'
734'
736'
732'
724'
739'
738'
737'

FIG. 51

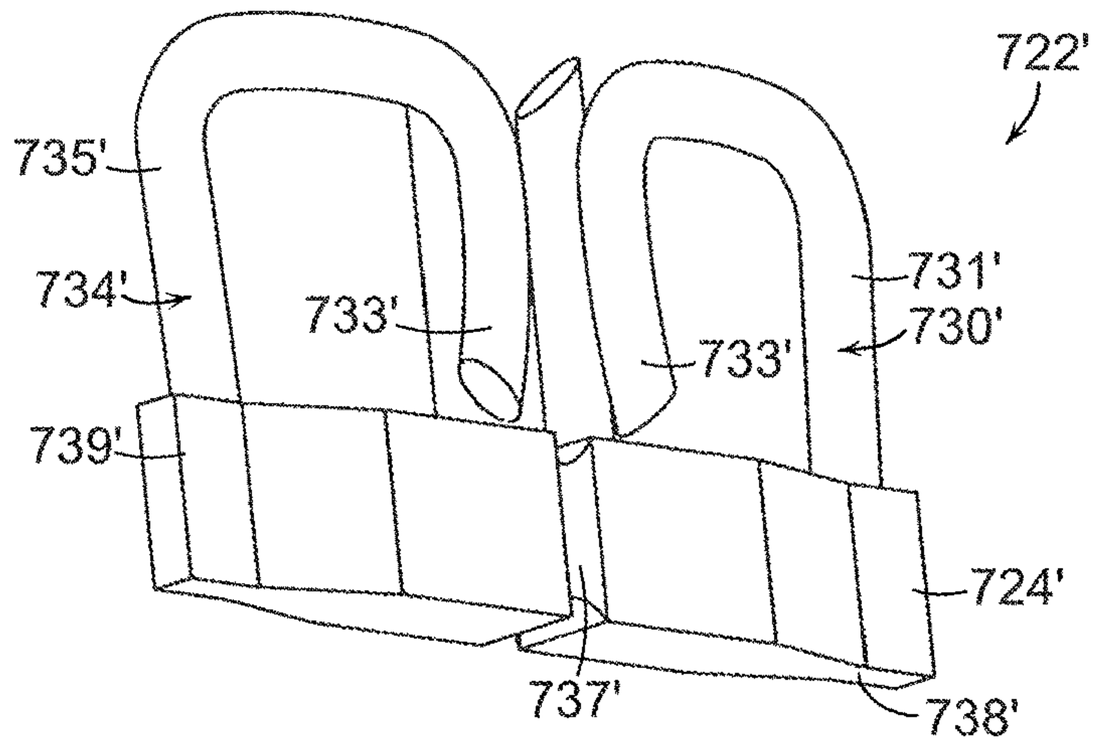


FIG. 52

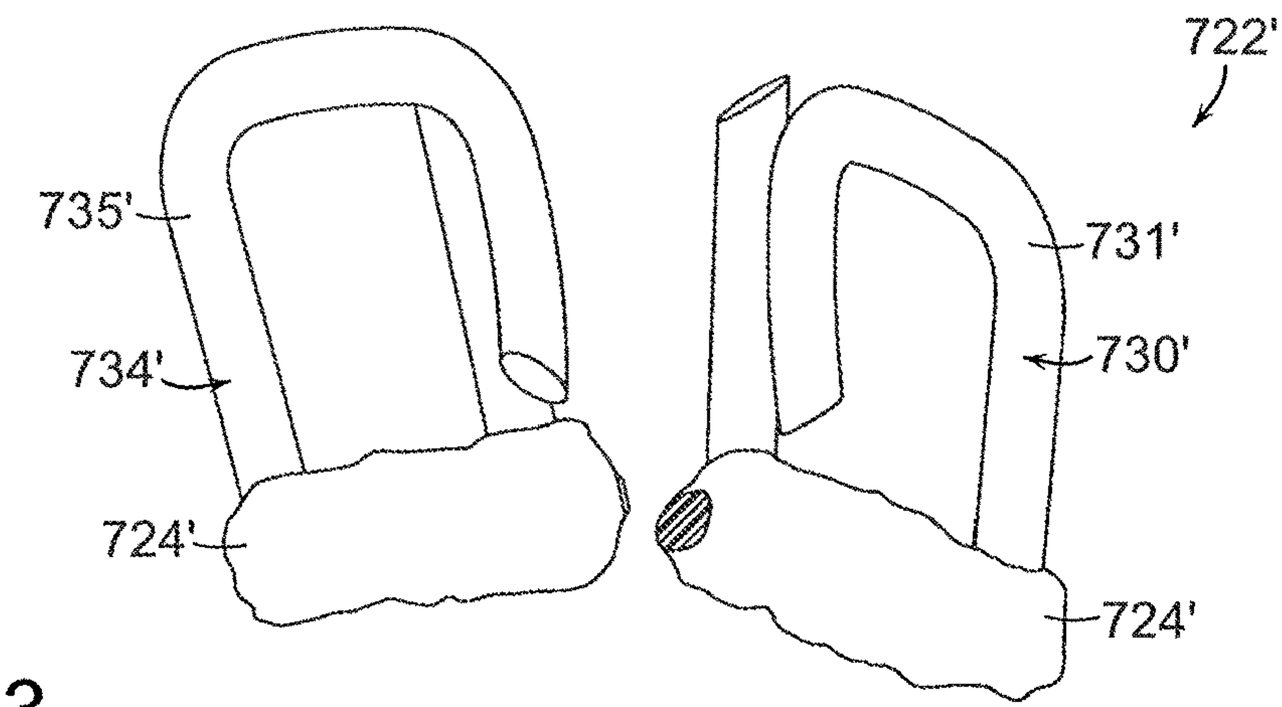


FIG. 53

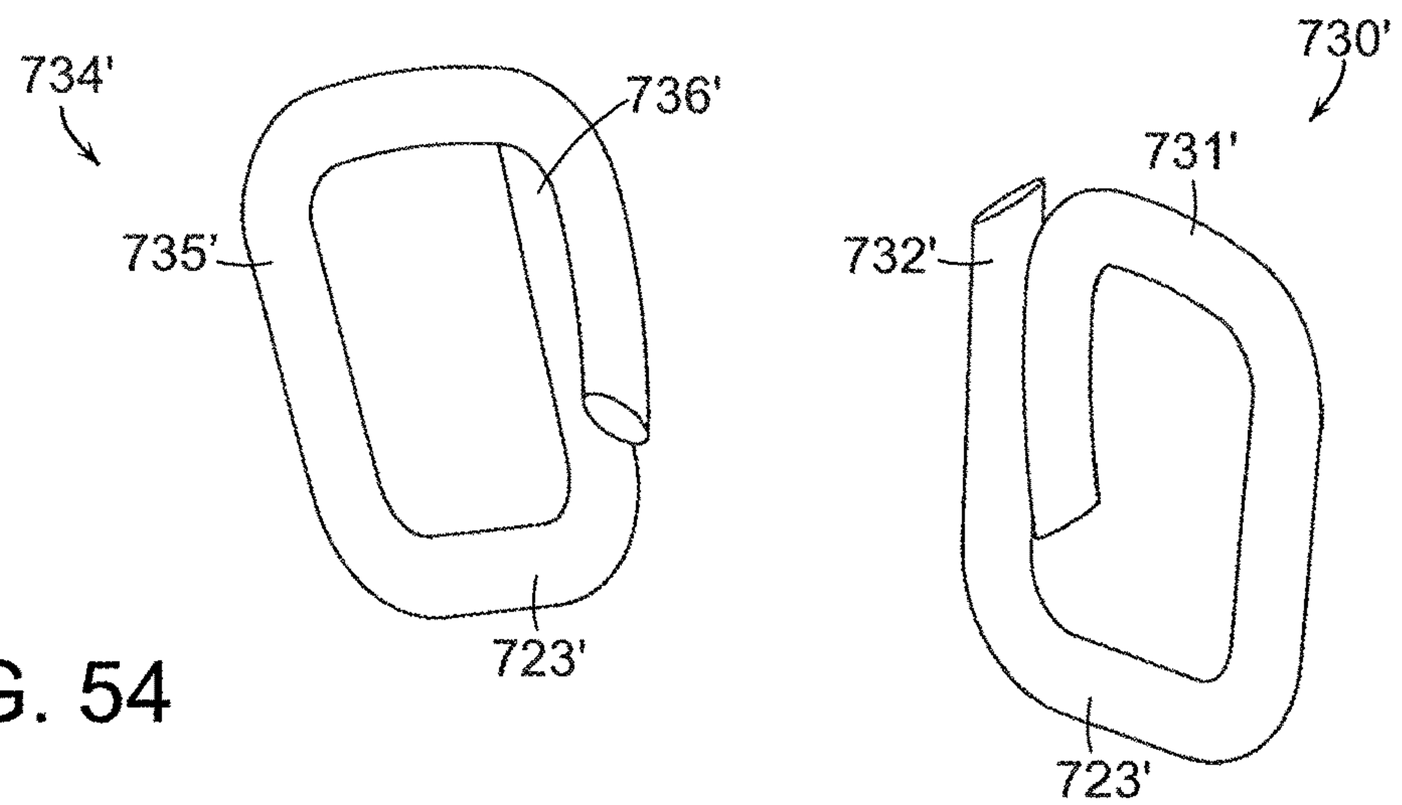


FIG. 54

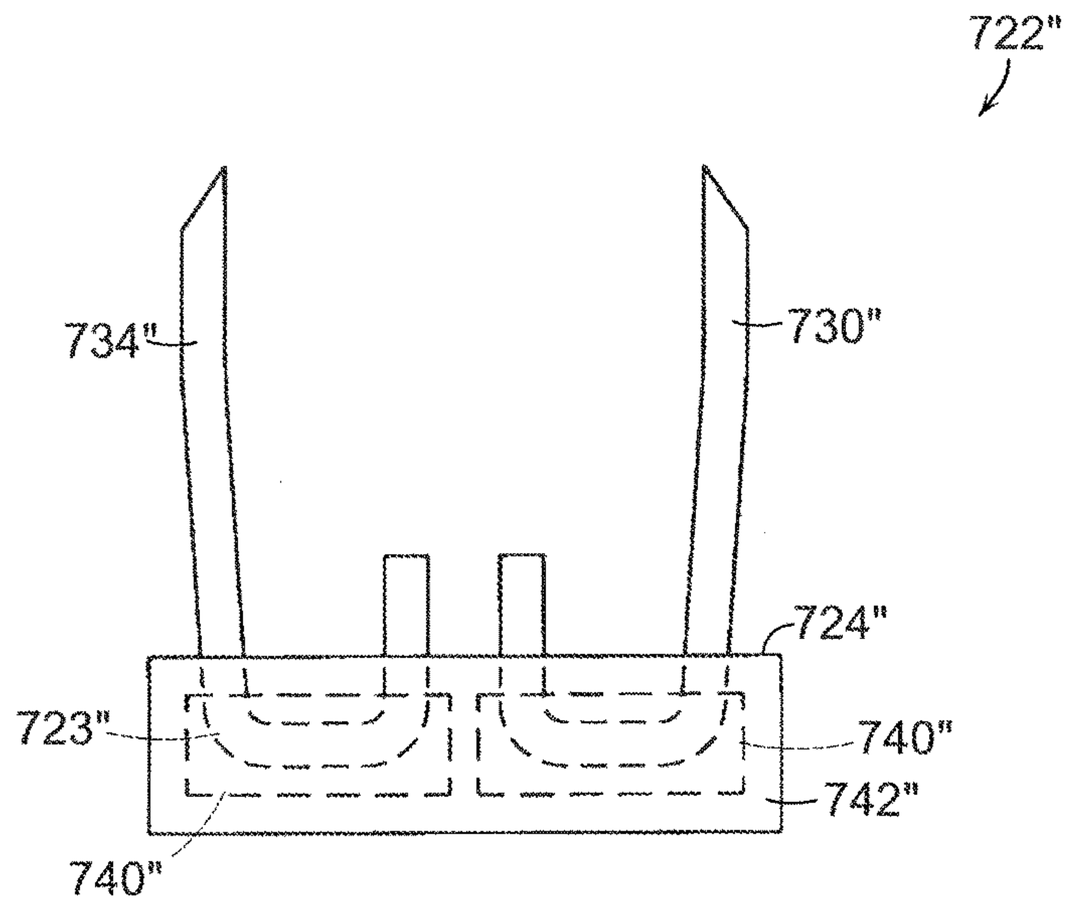


FIG. 55

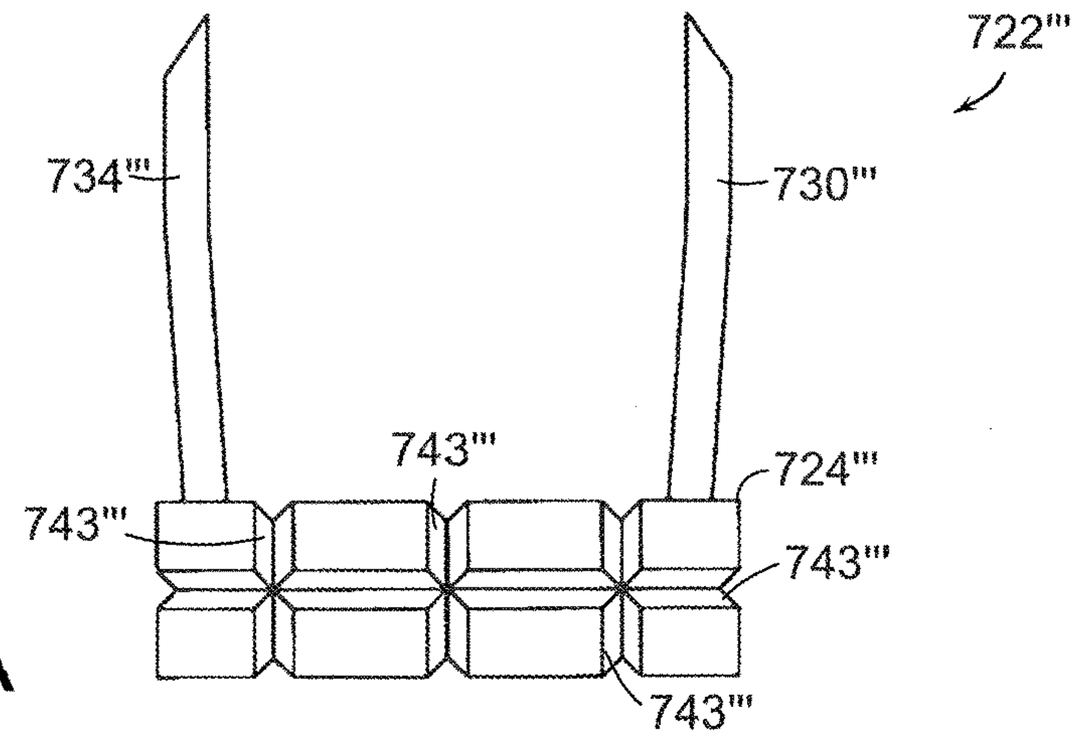


FIG. 56A

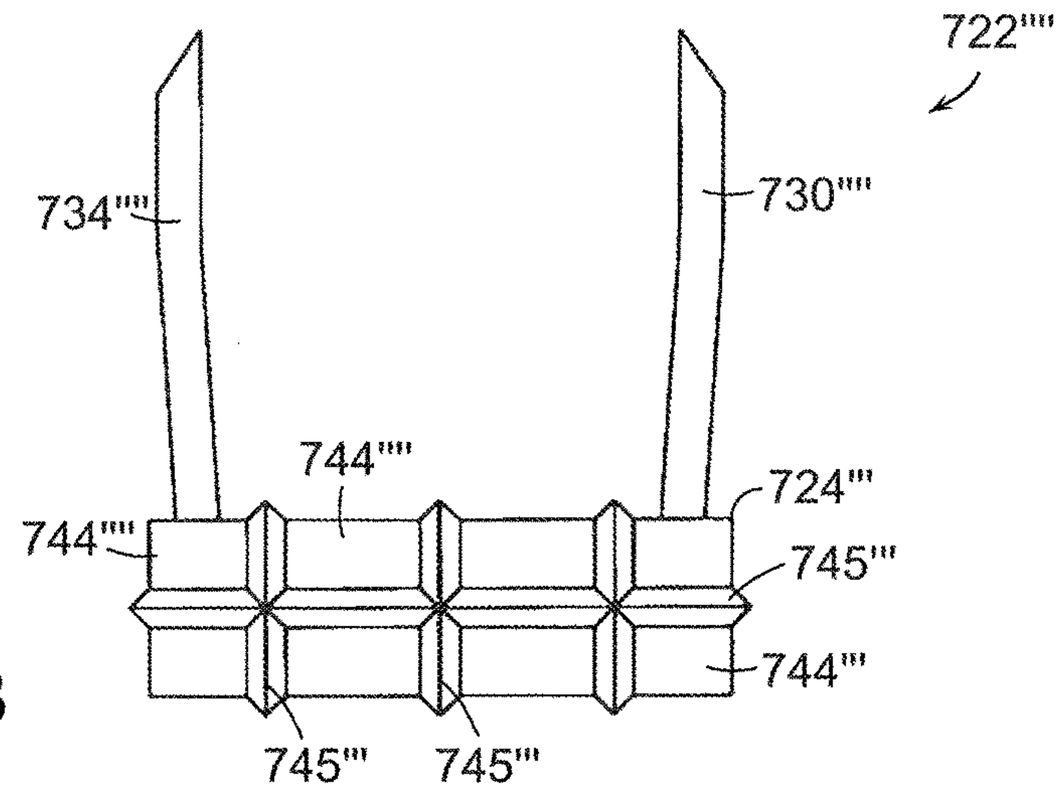


FIG. 56B

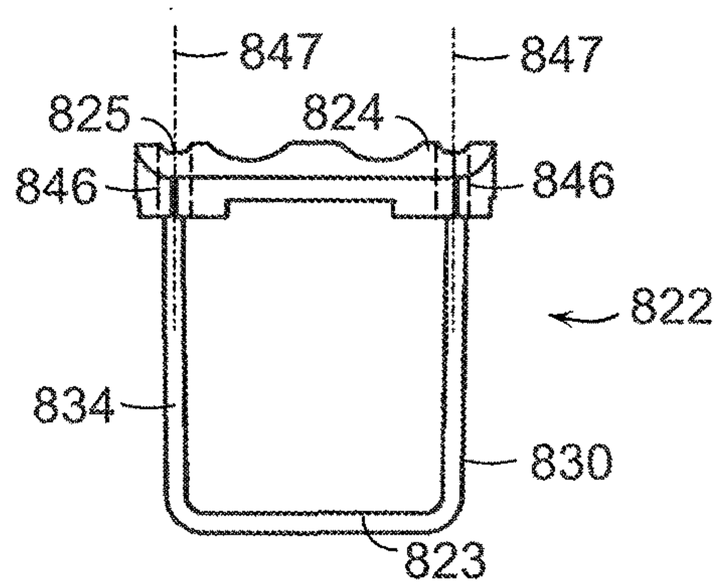


FIG. 57

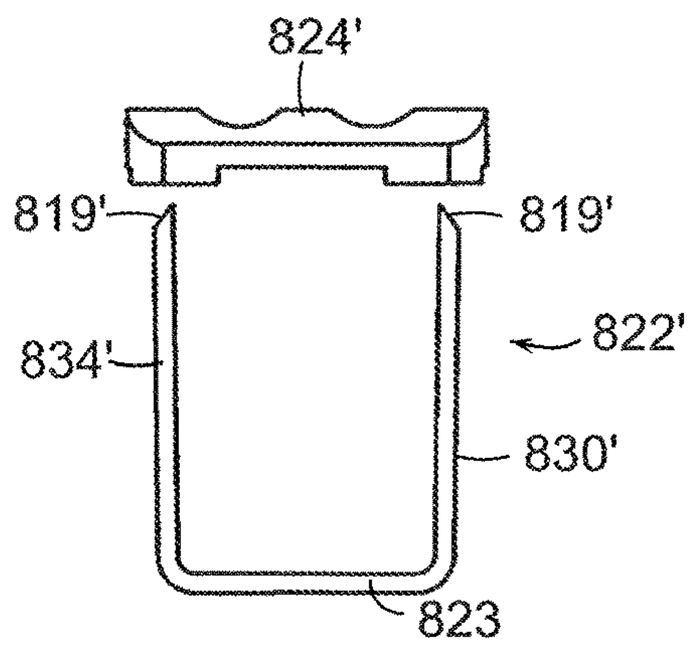


FIG. 58

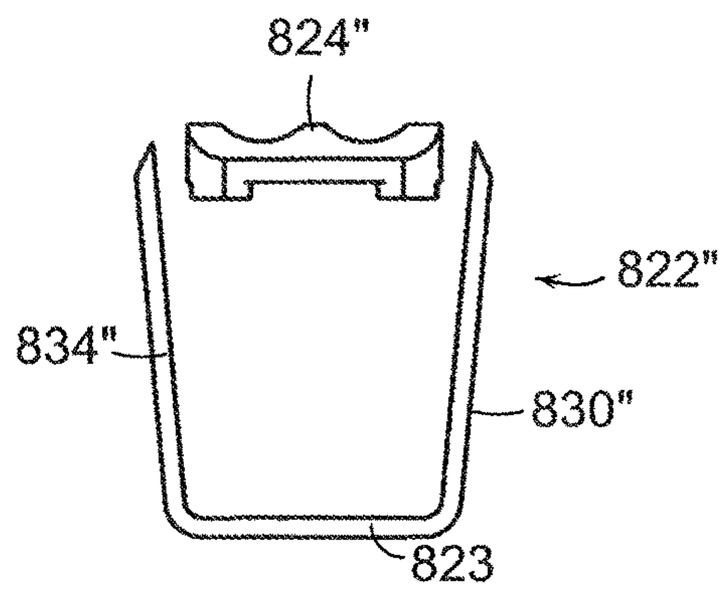


FIG. 59

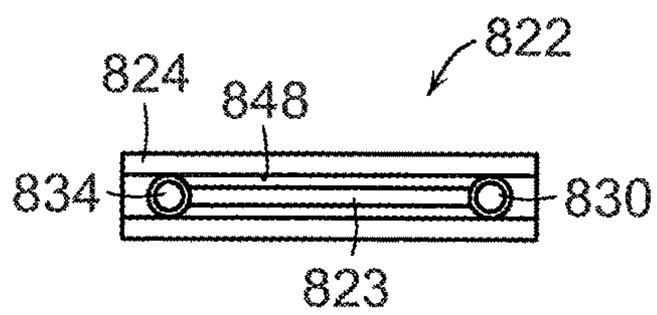


FIG. 60

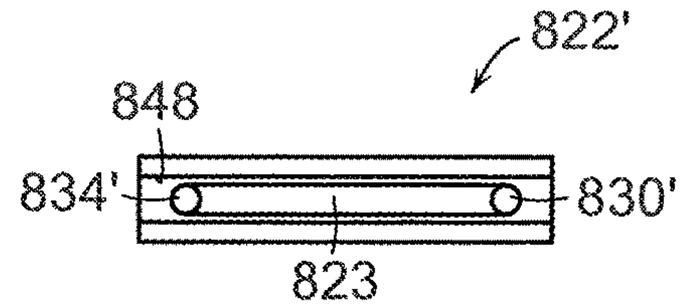


FIG. 61

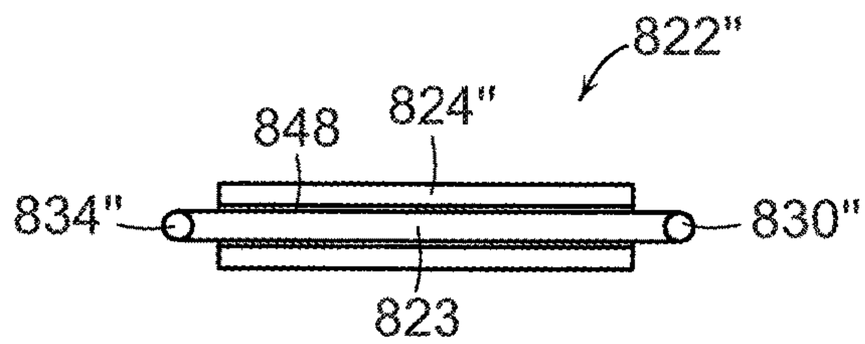


FIG. 62

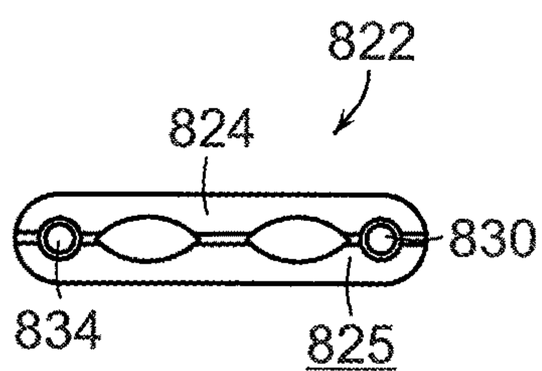


FIG. 63

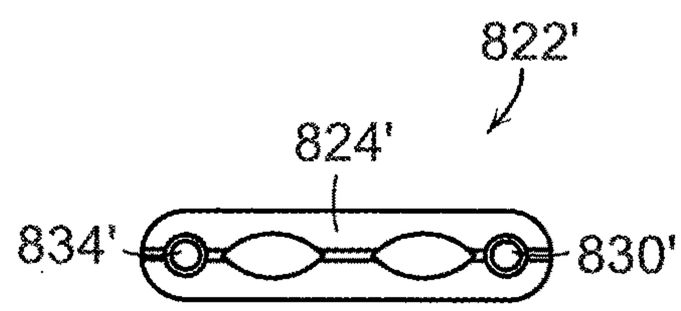


FIG. 64

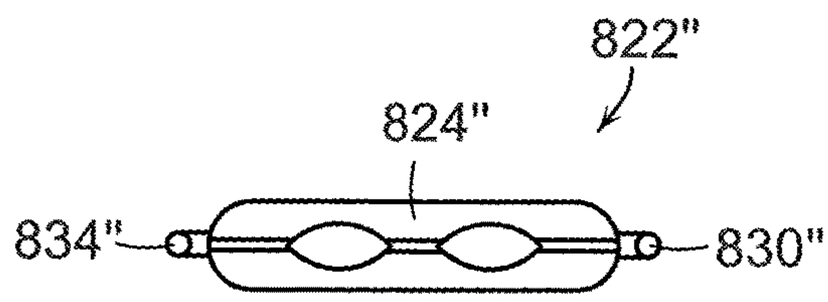


FIG. 65

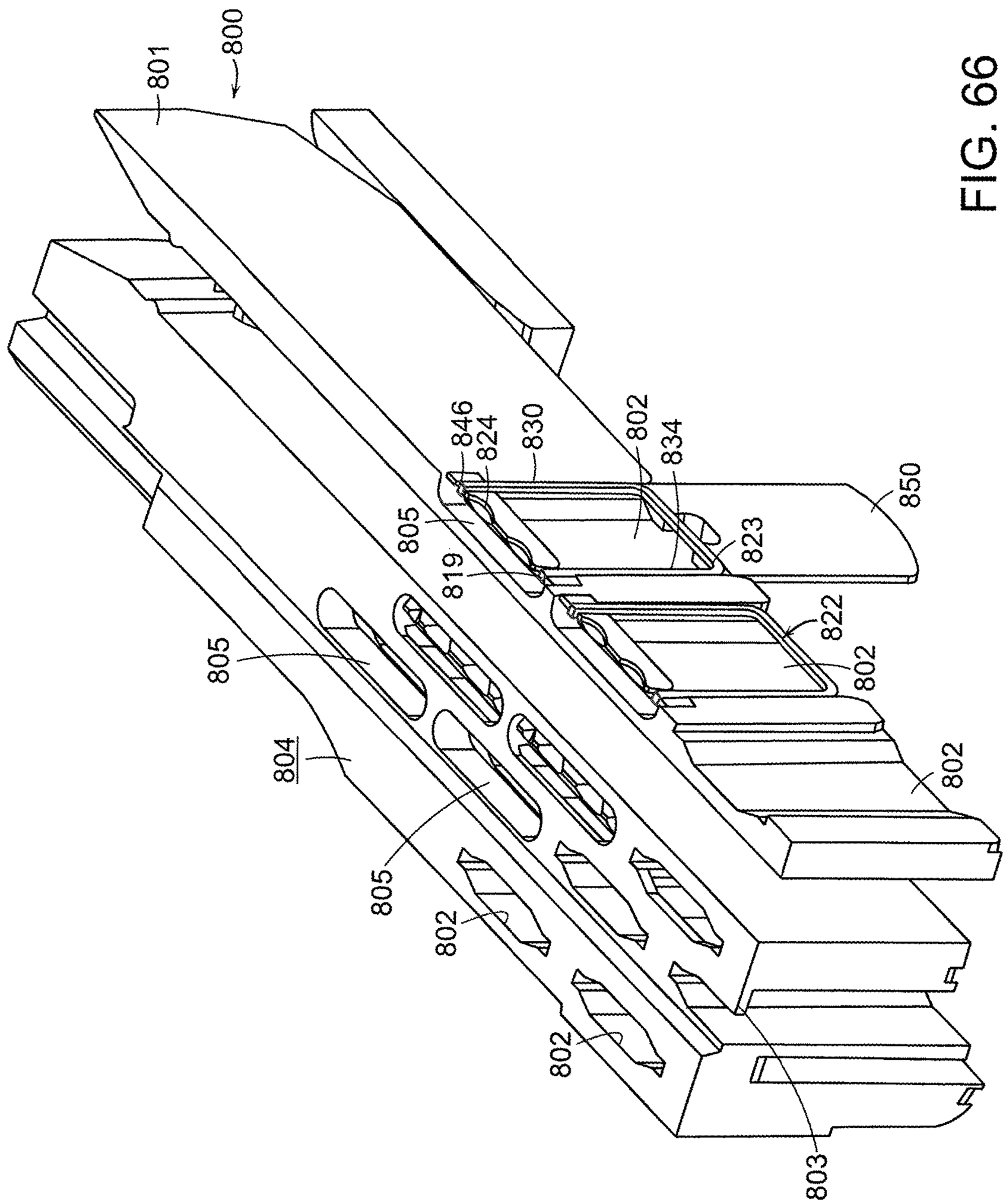
801
800
846
824
830
802
834
850
805
819
823
822
805
802
804
802
805
802
802
803

FIG. 66

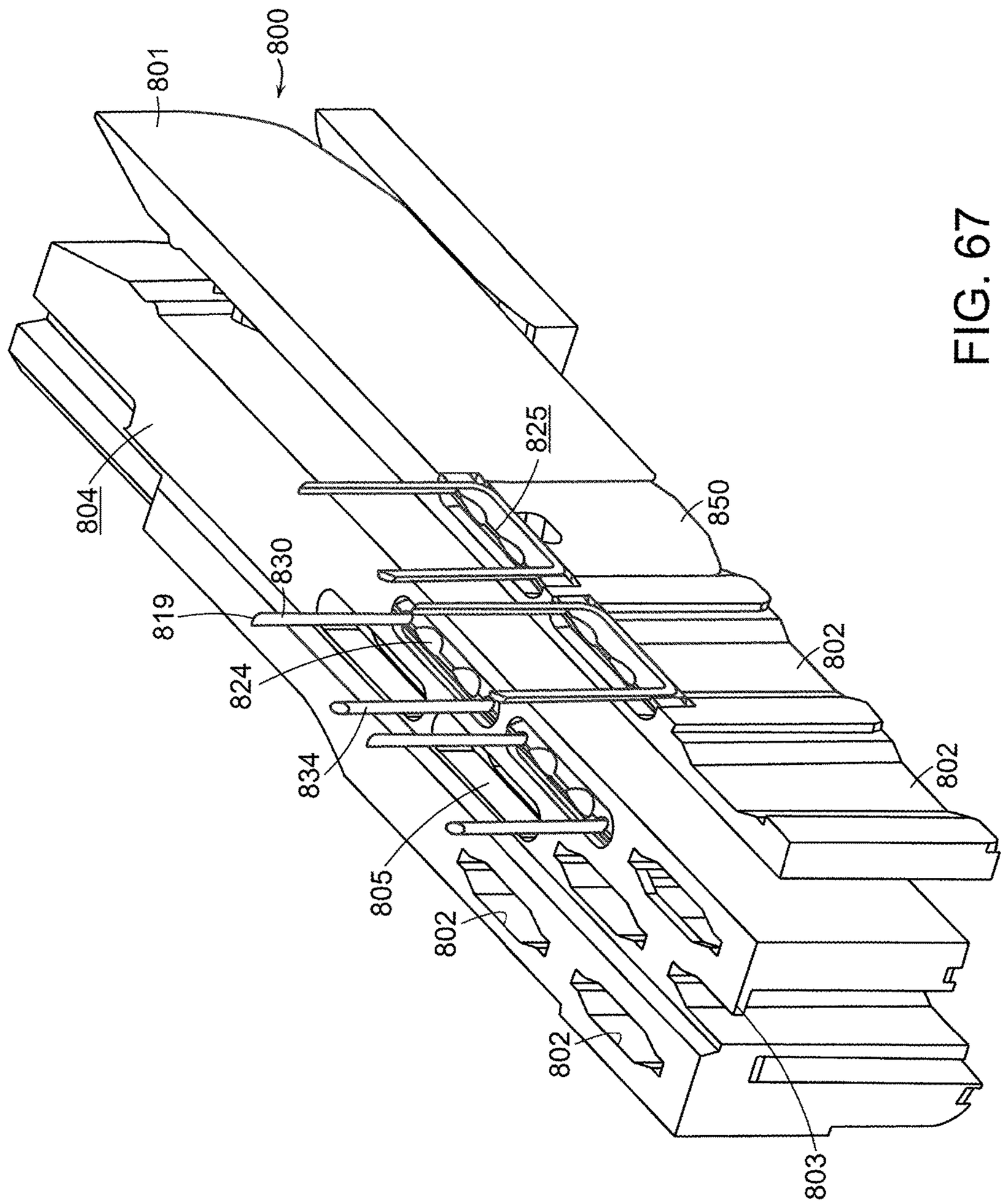


FIG. 67

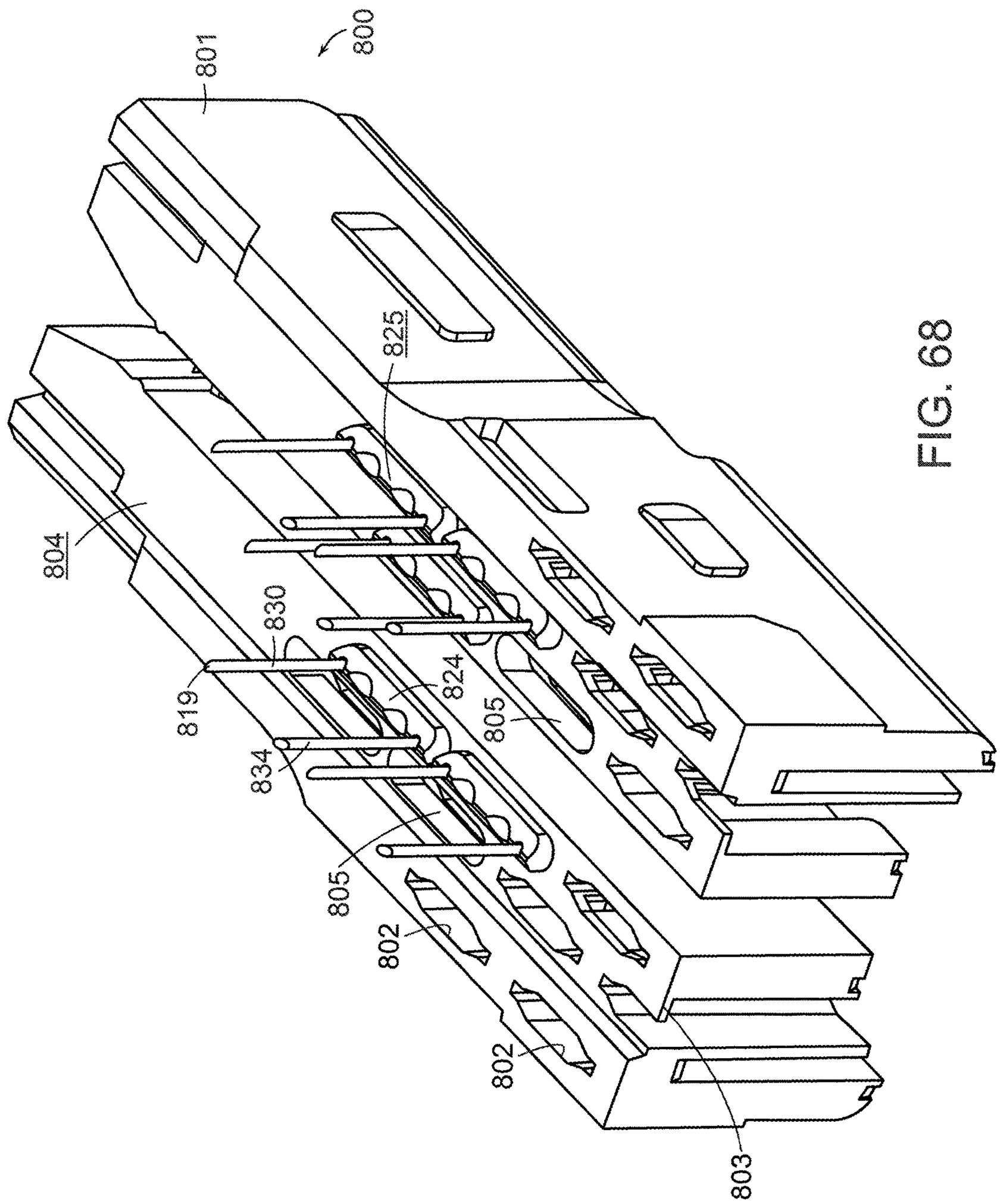


FIG. 68

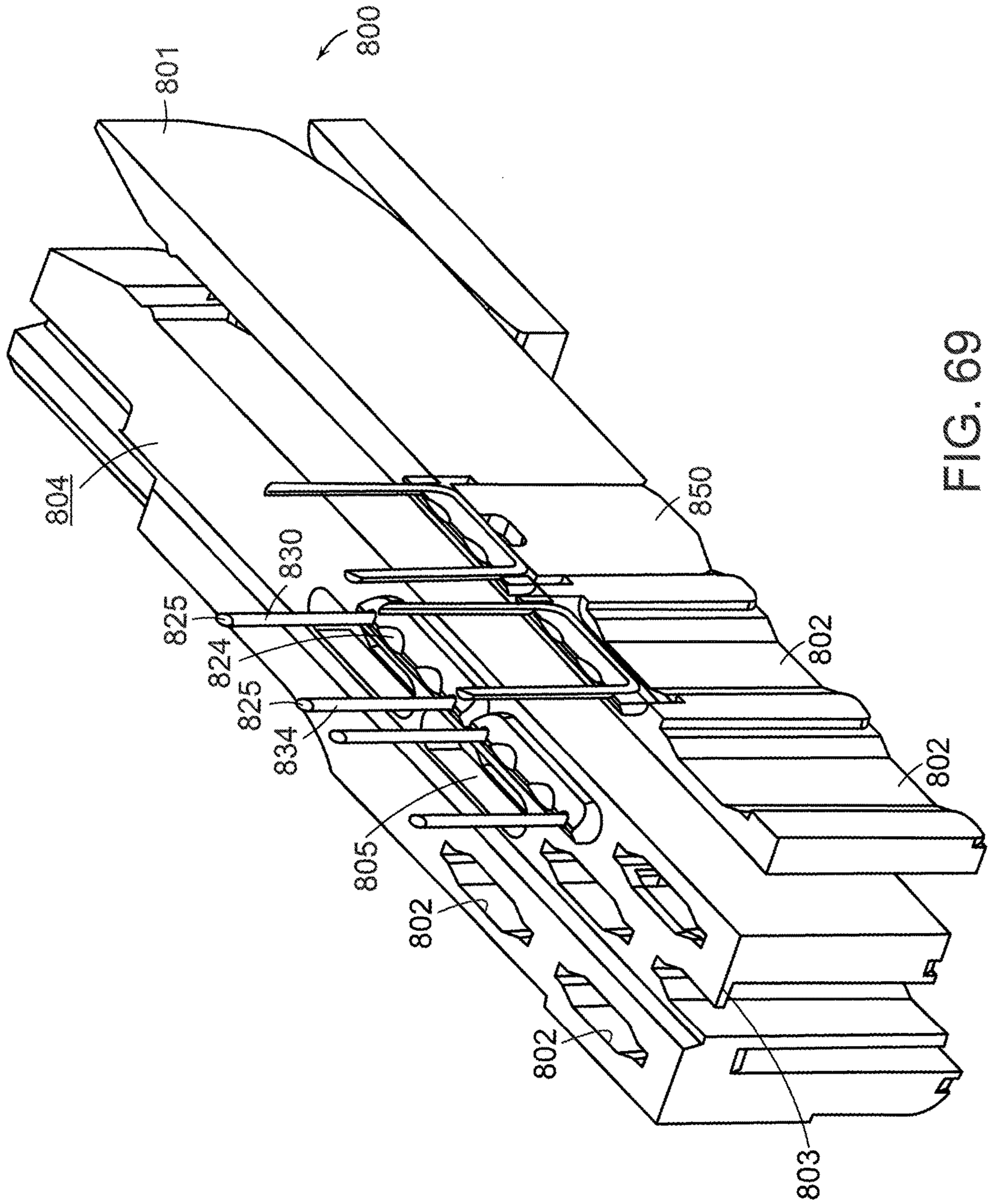


FIG. 69

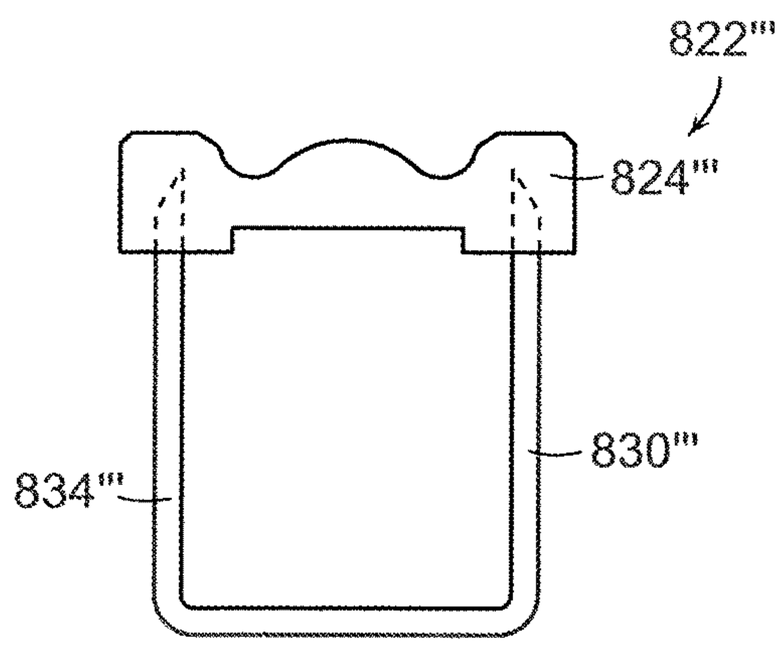


FIG. 70

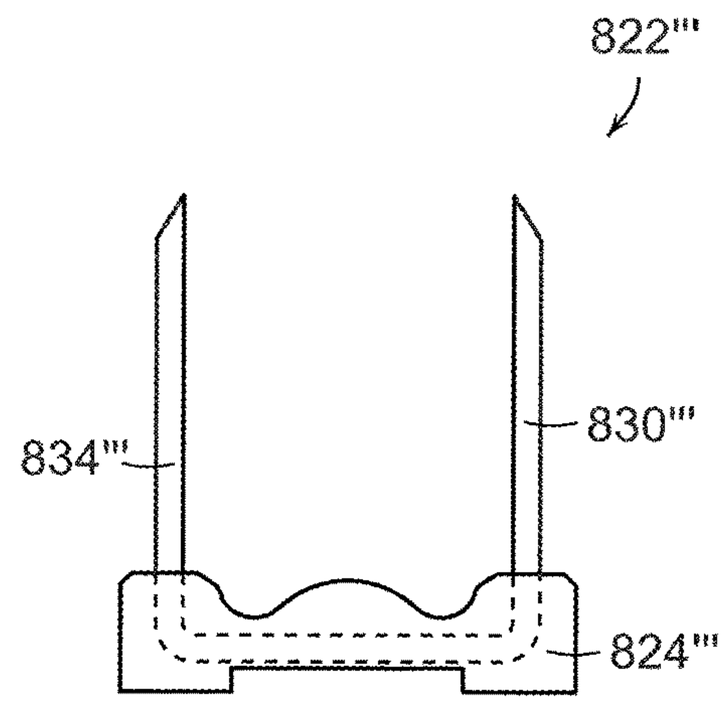


FIG. 71

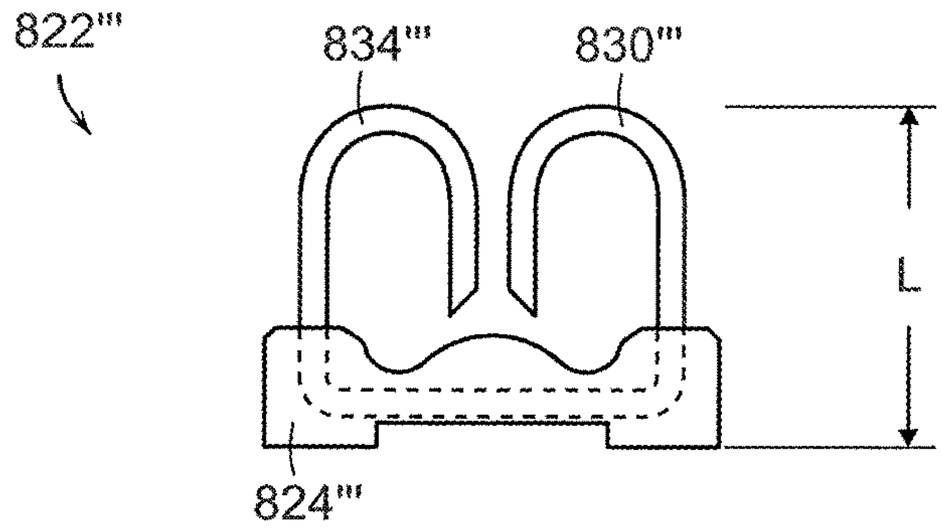


FIG. 72

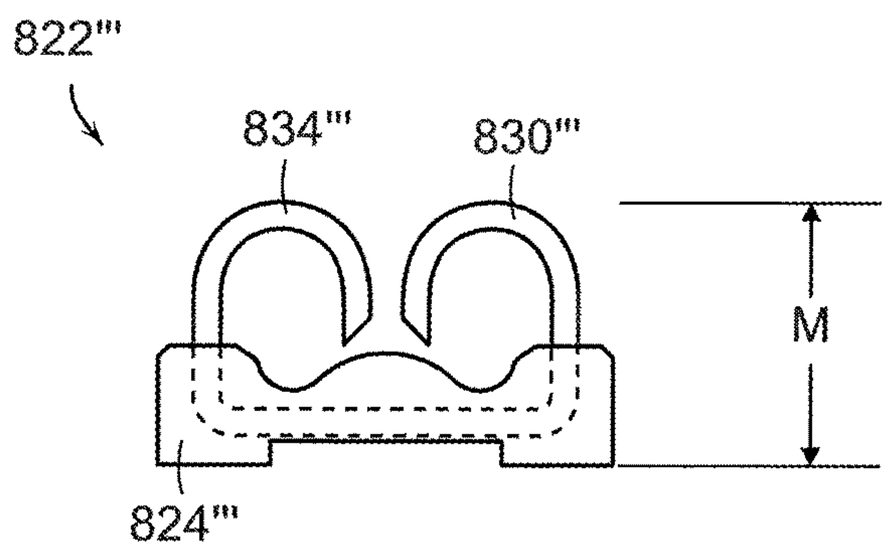


FIG. 73

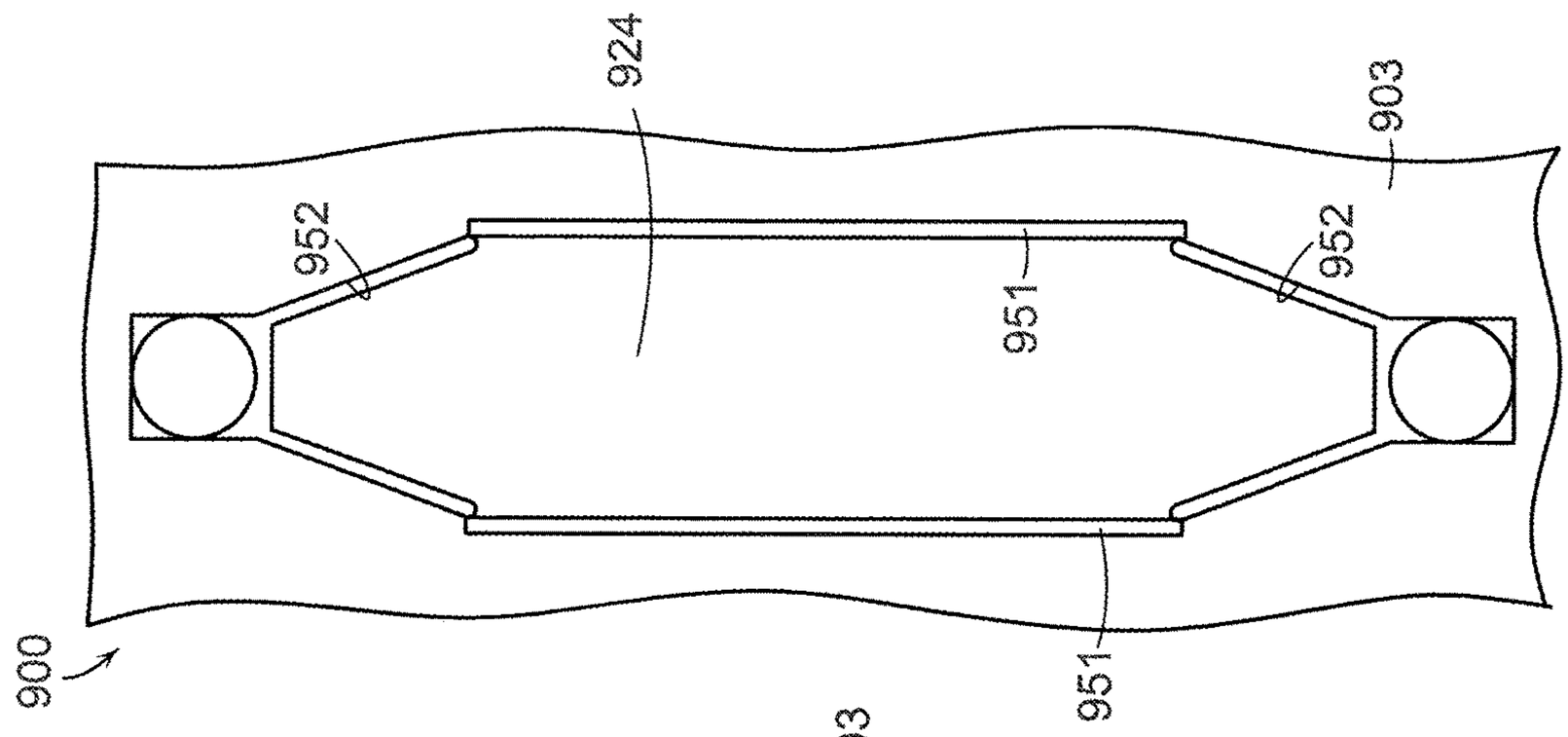


FIG. 75

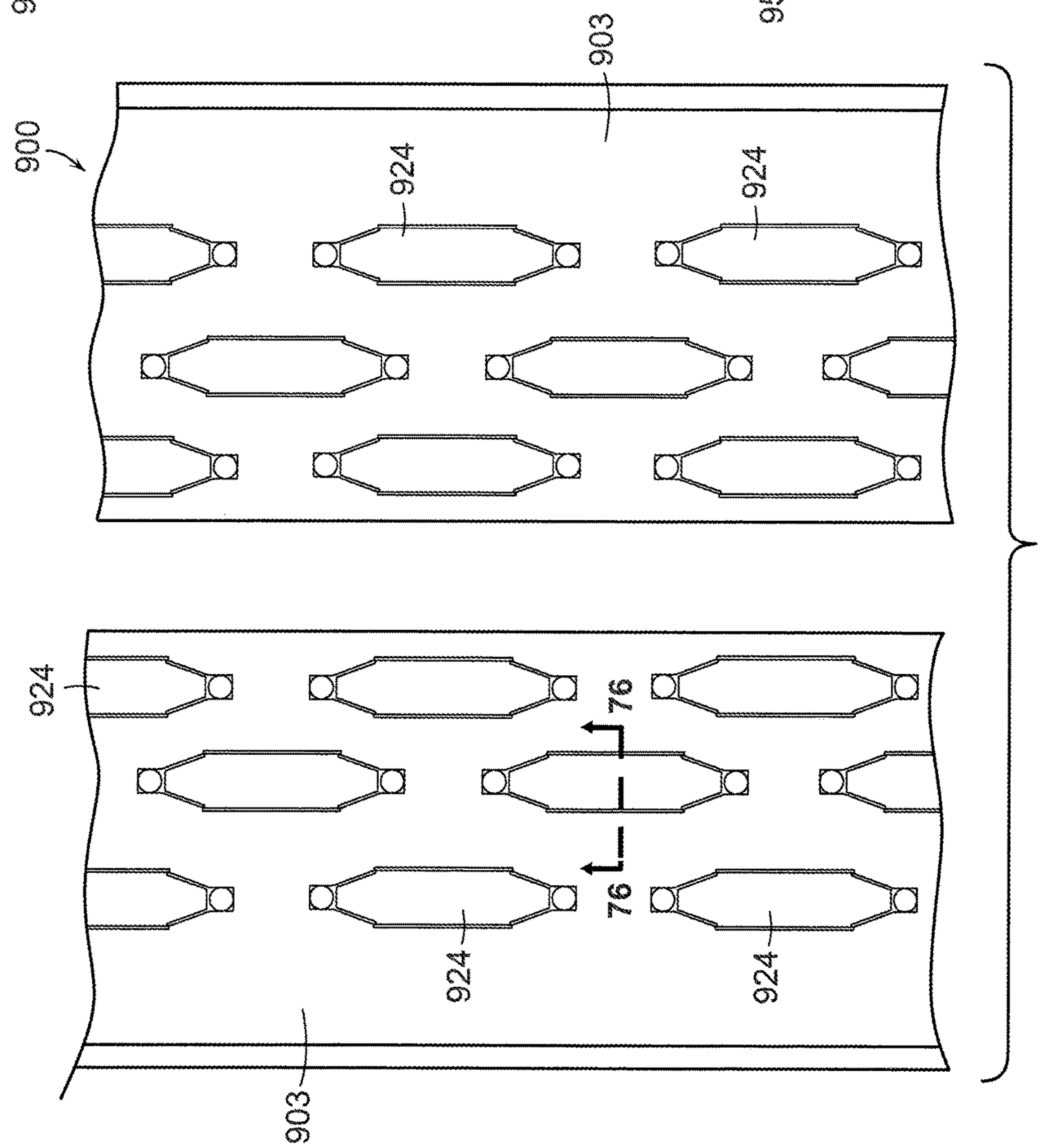


FIG. 74

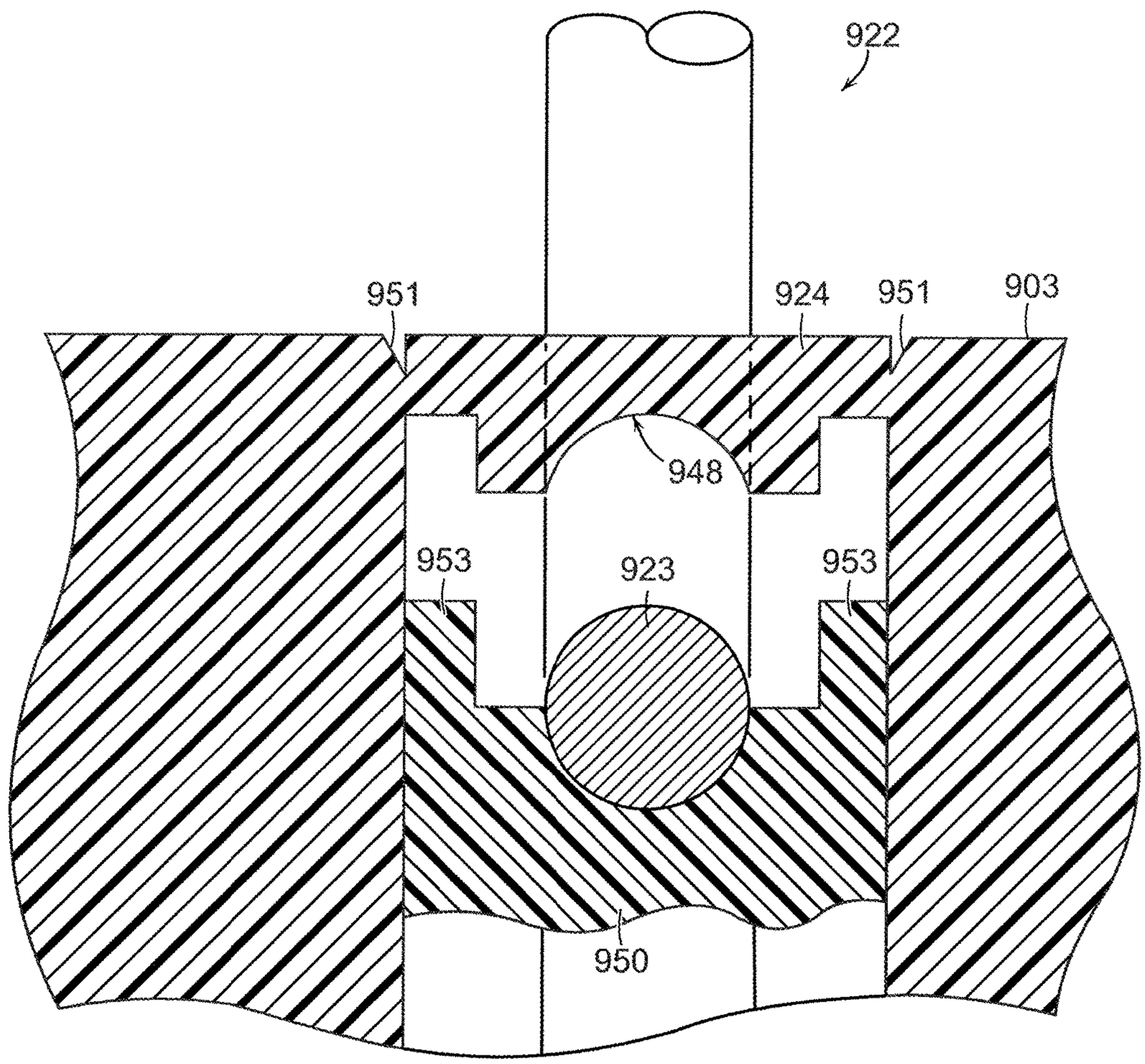


FIG. 76

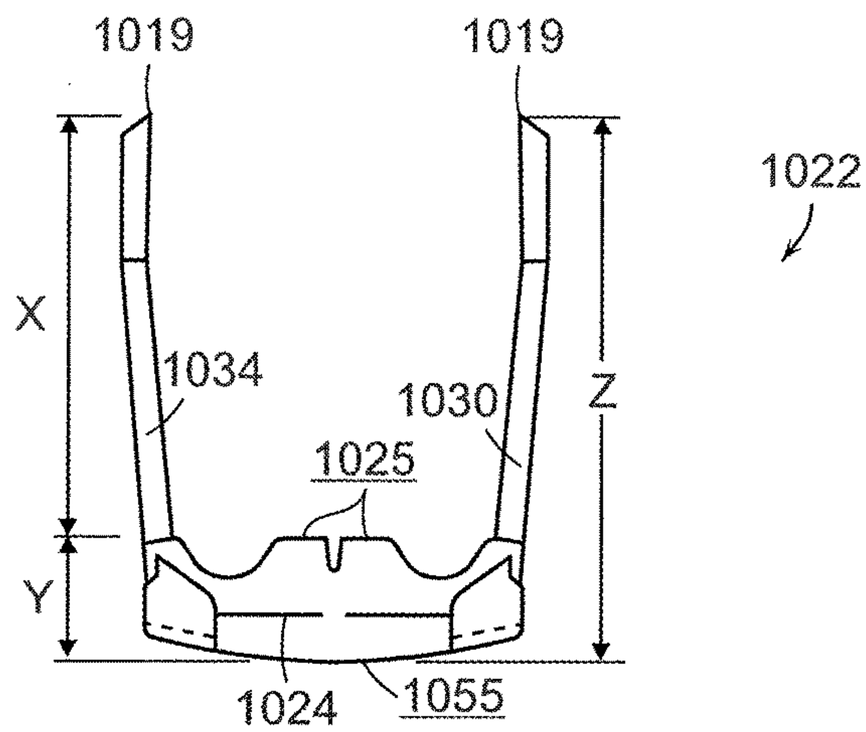


FIG. 77

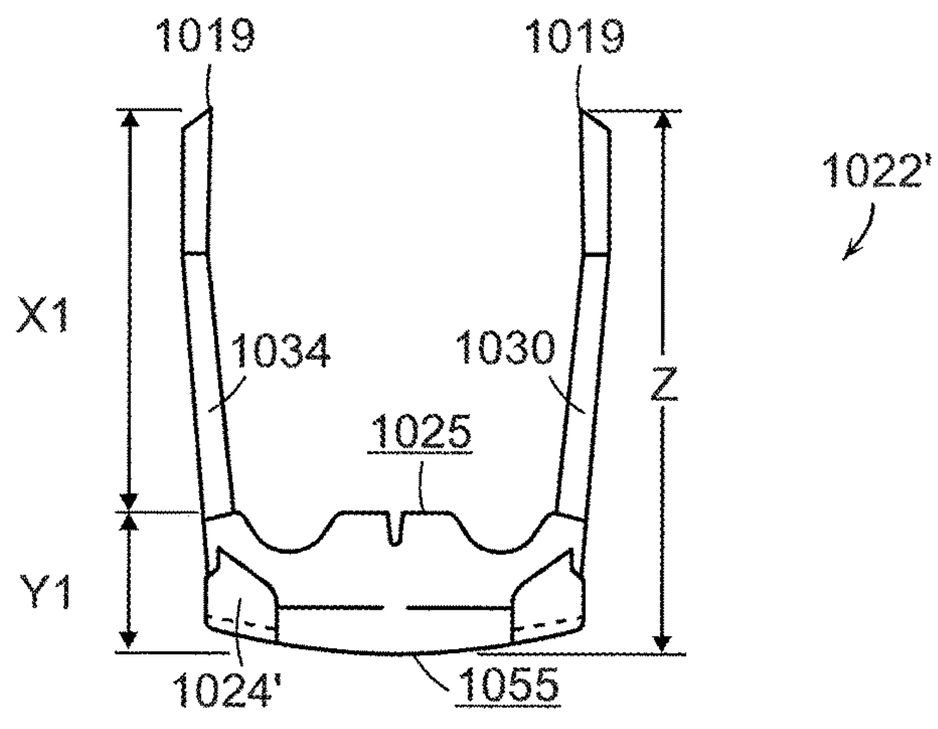


FIG. 78

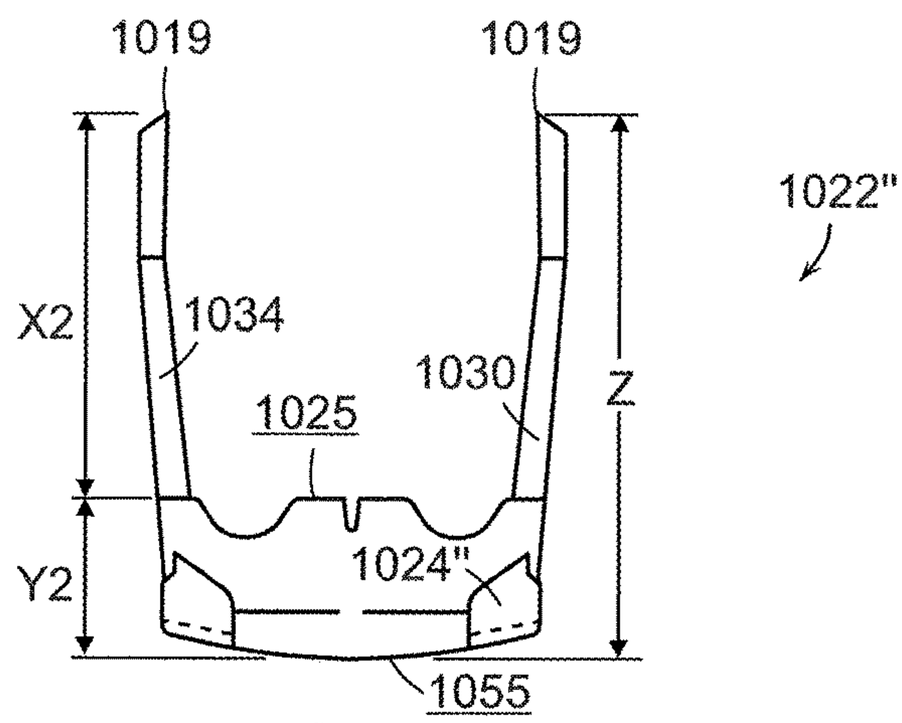


FIG. 79

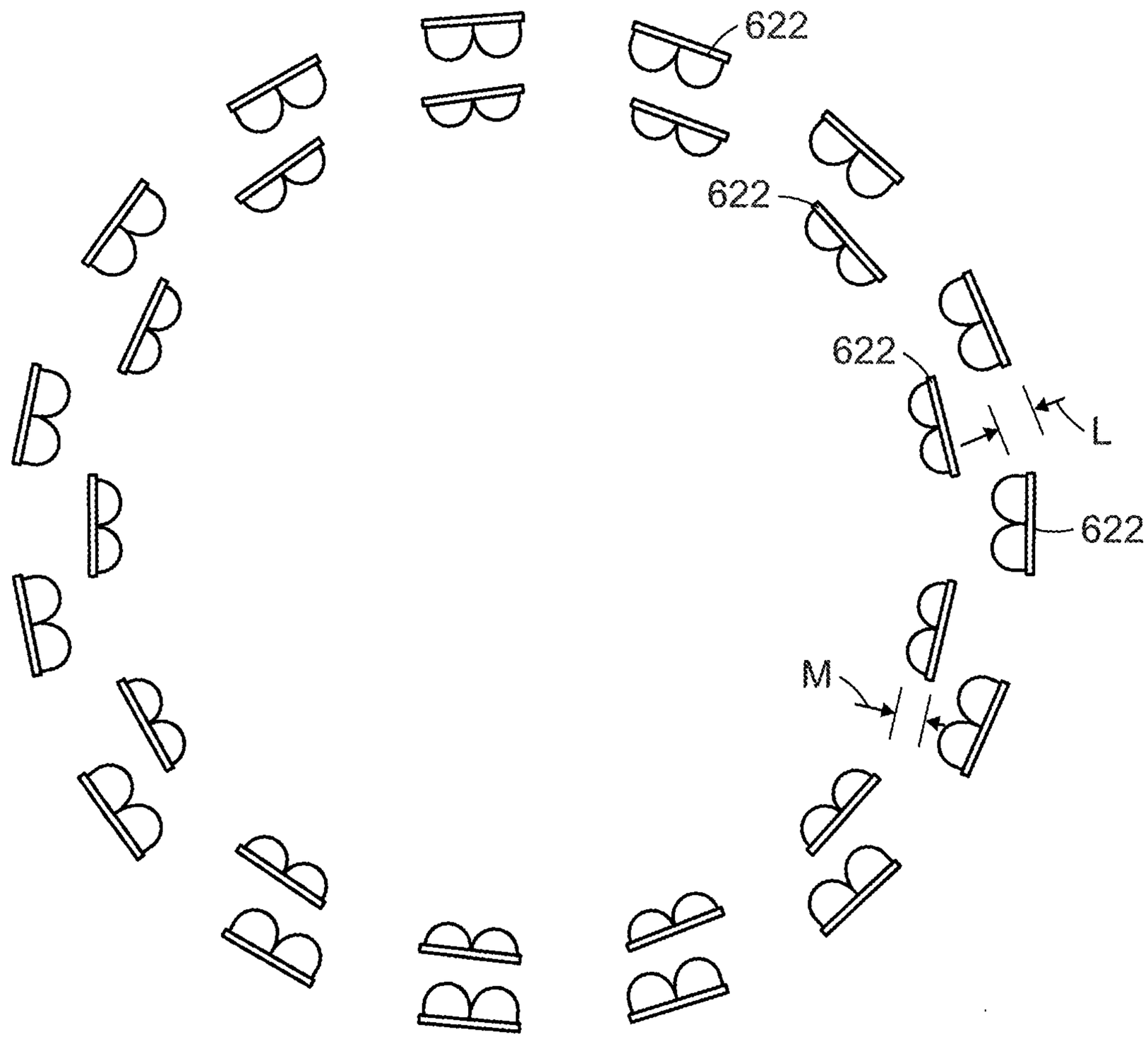


FIG. 80

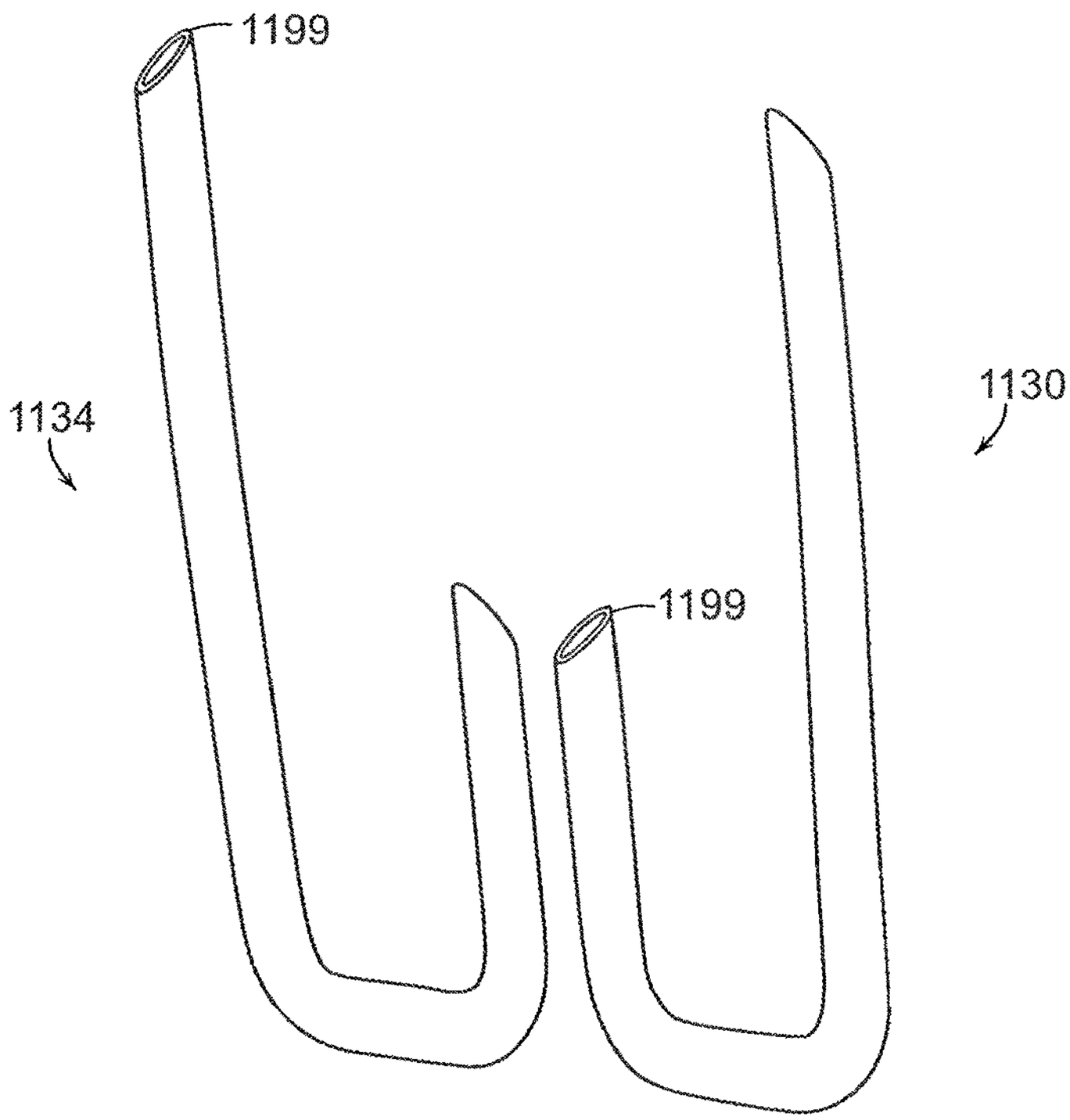


FIG. 81

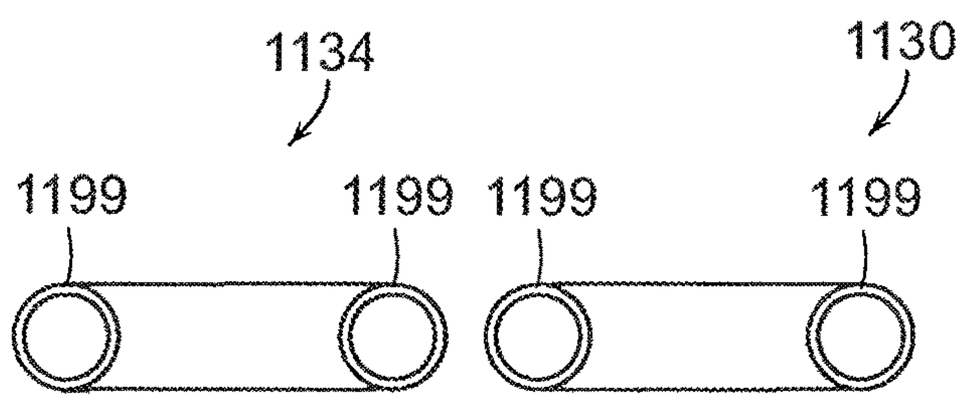


FIG. 82

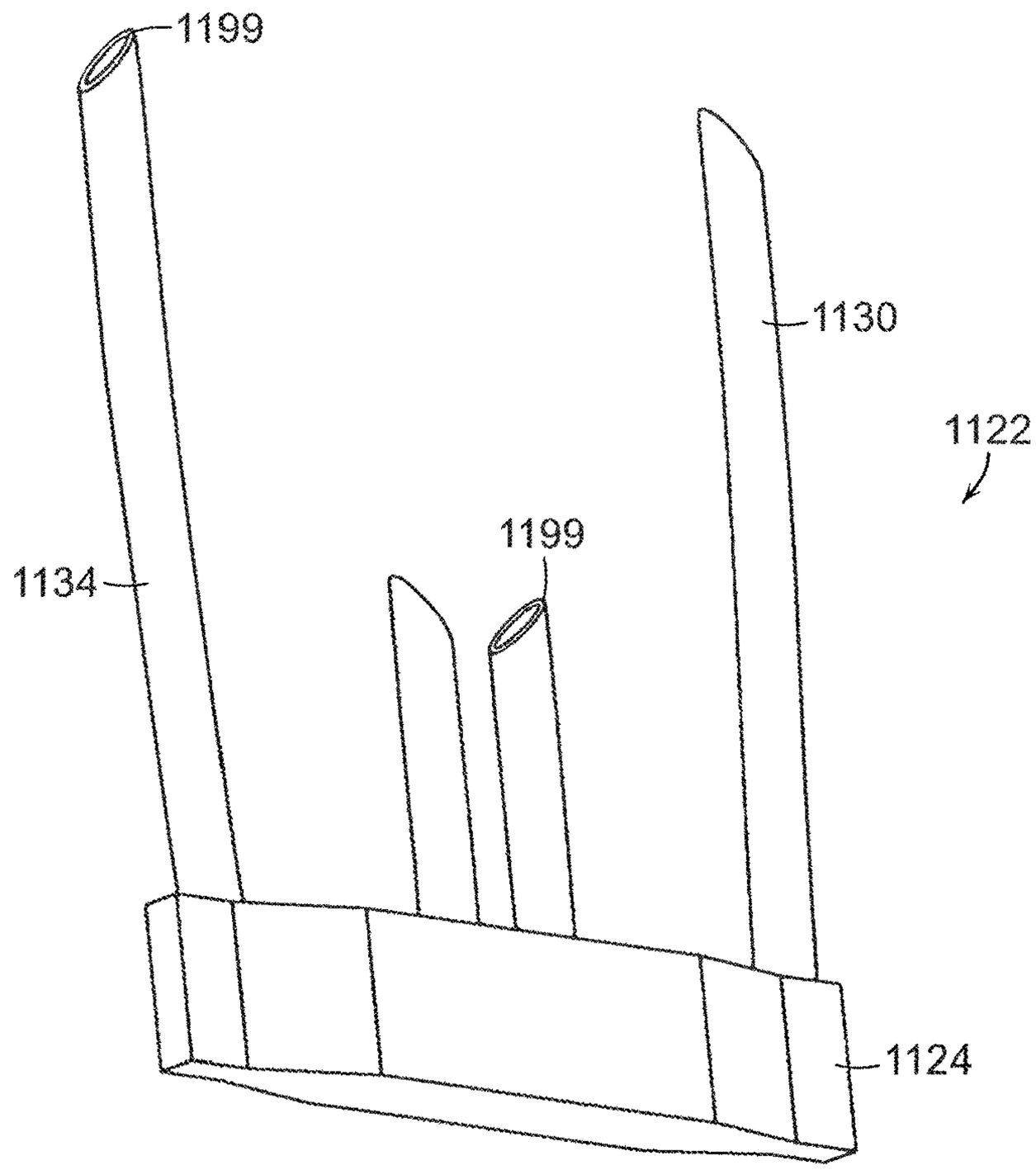


FIG. 83

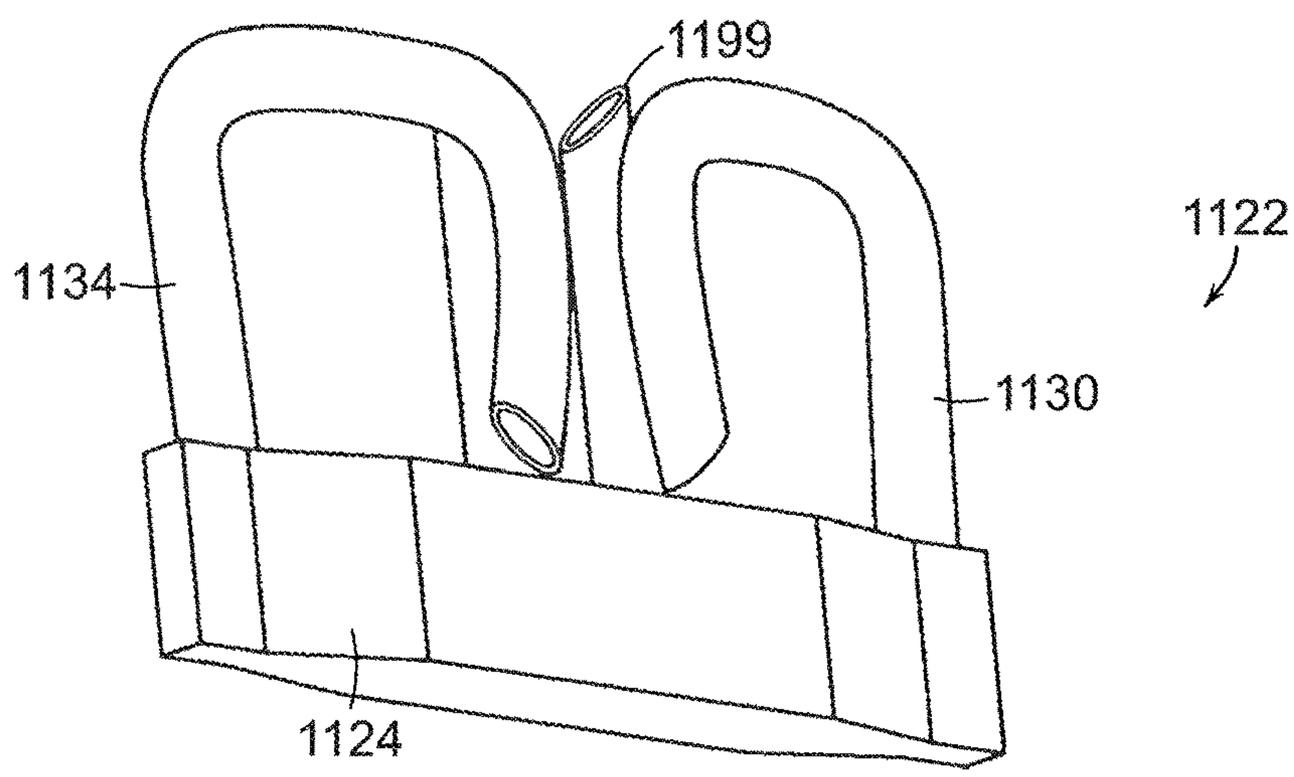


FIG. 84

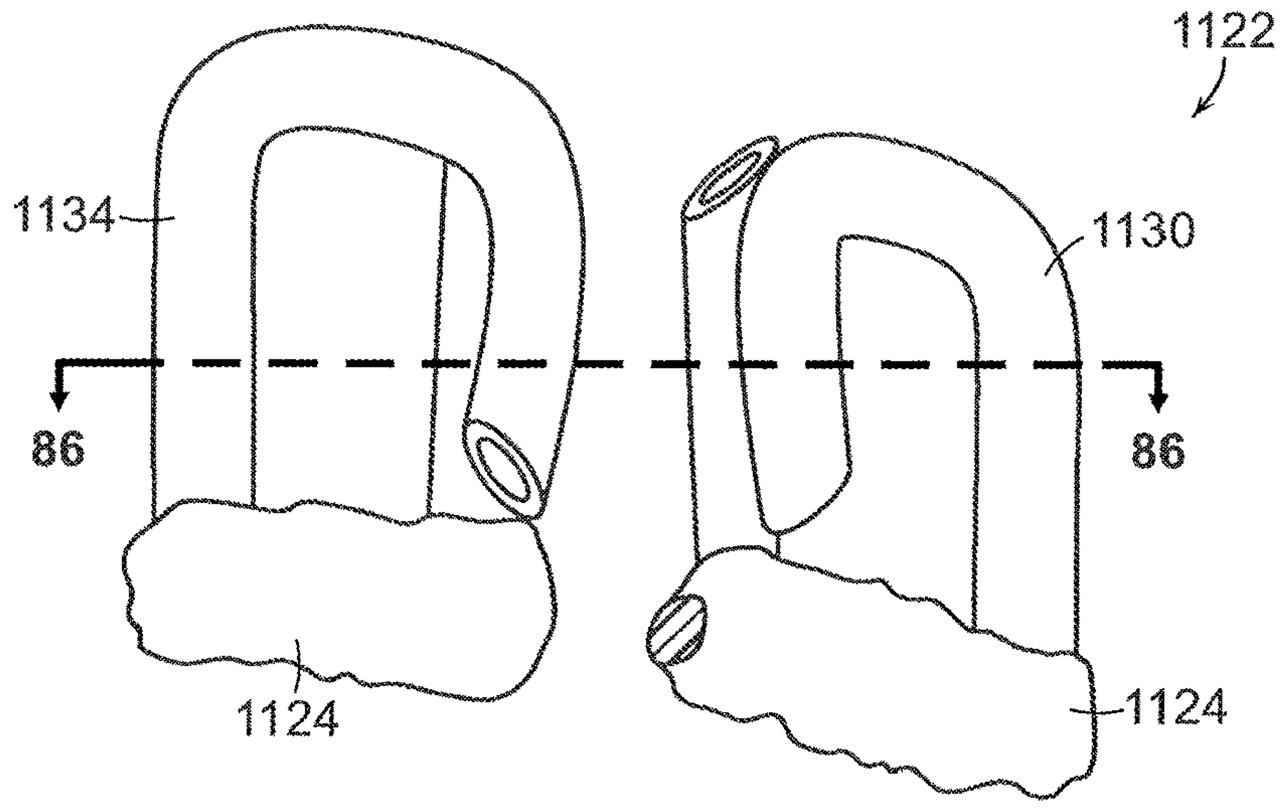


FIG. 85

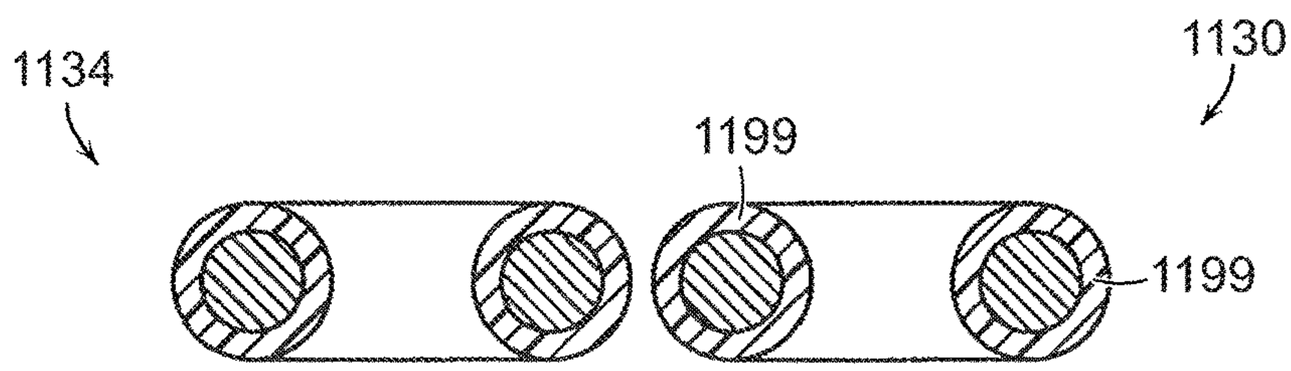


FIG. 86

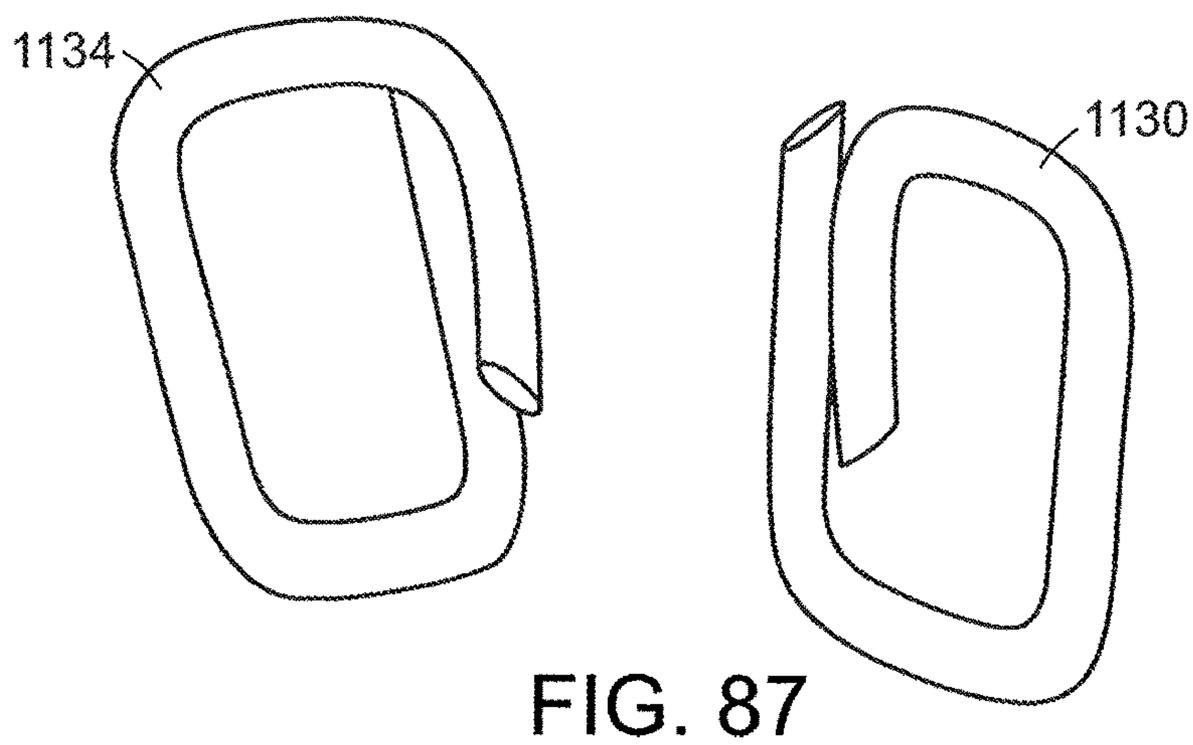


FIG. 87

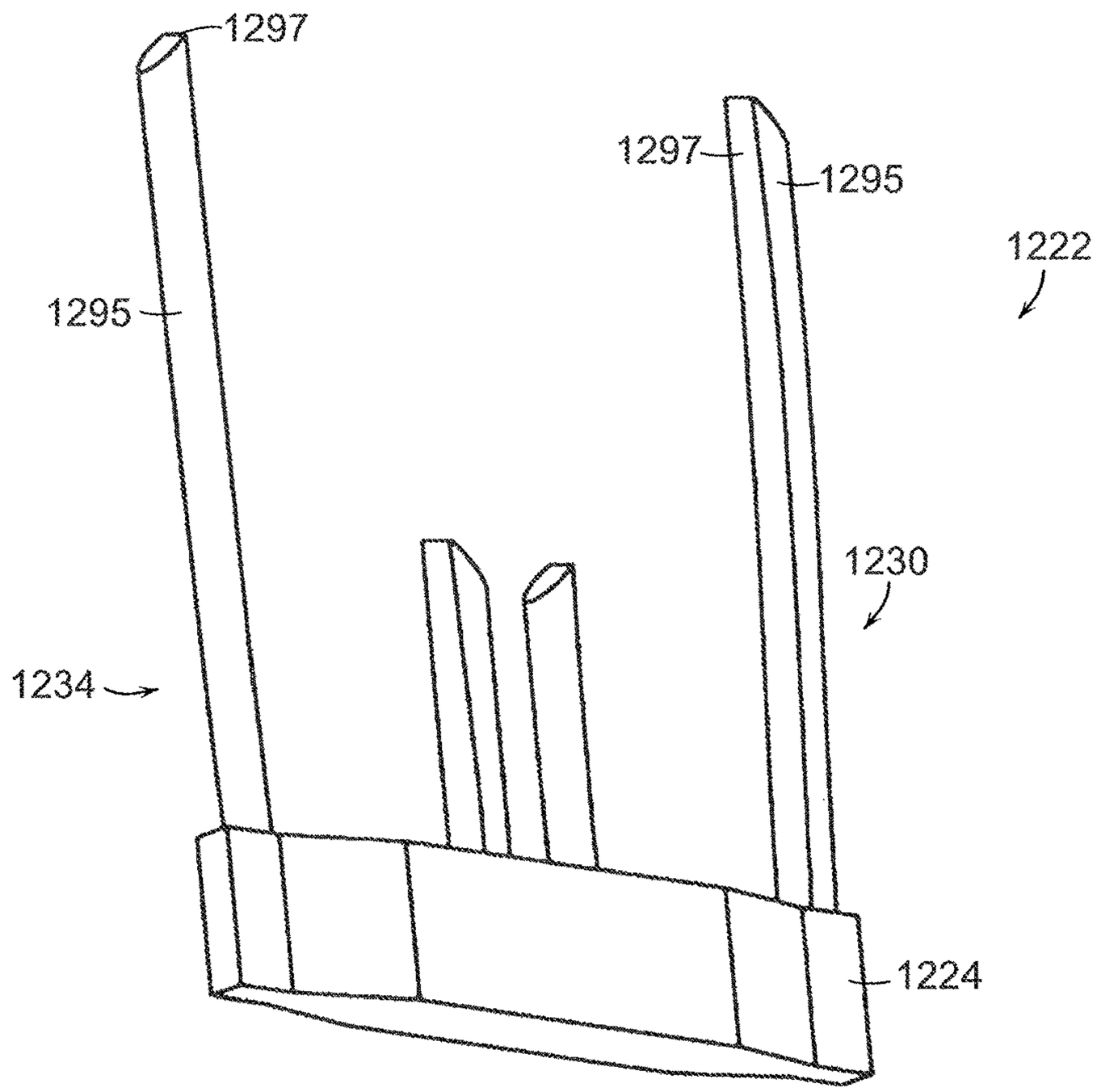
1297
1297
1295
1222
1295
1230
1234
1224

FIG. 88

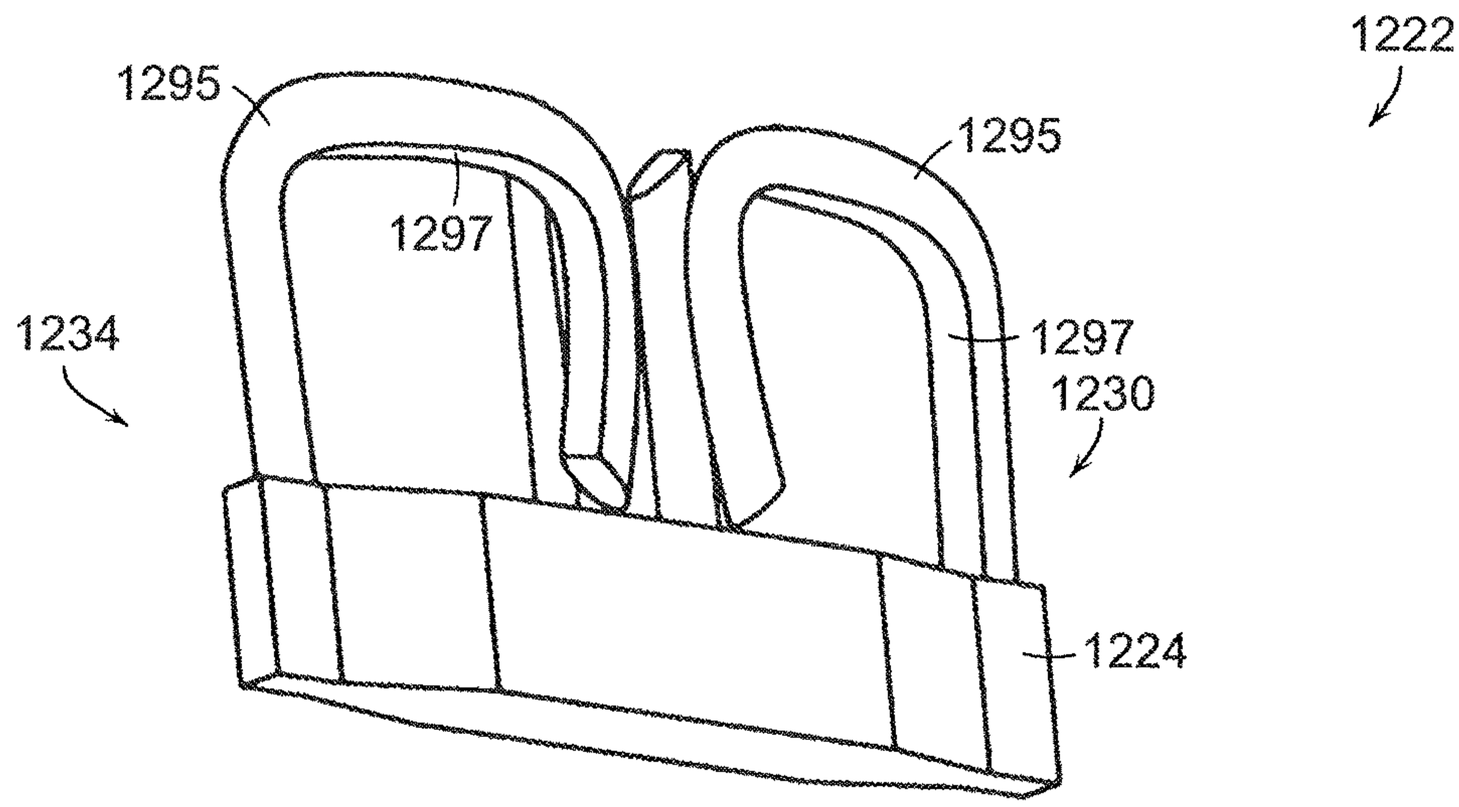
1222
1295
1295
1297
1234
1297
1230
1224

FIG. 89

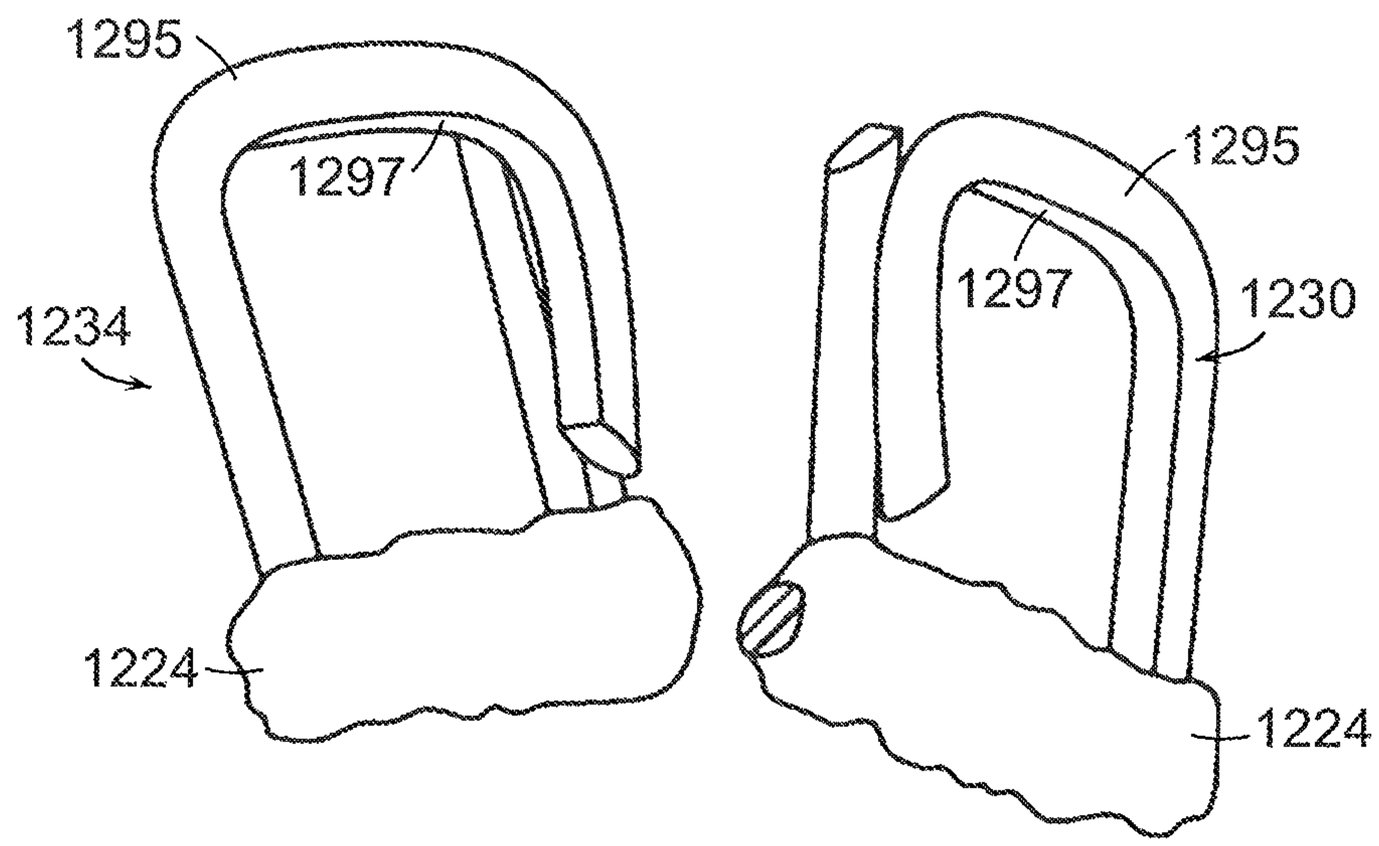
1295
1297
1234
1224
1295
1297
1230
1224

FIG. 90

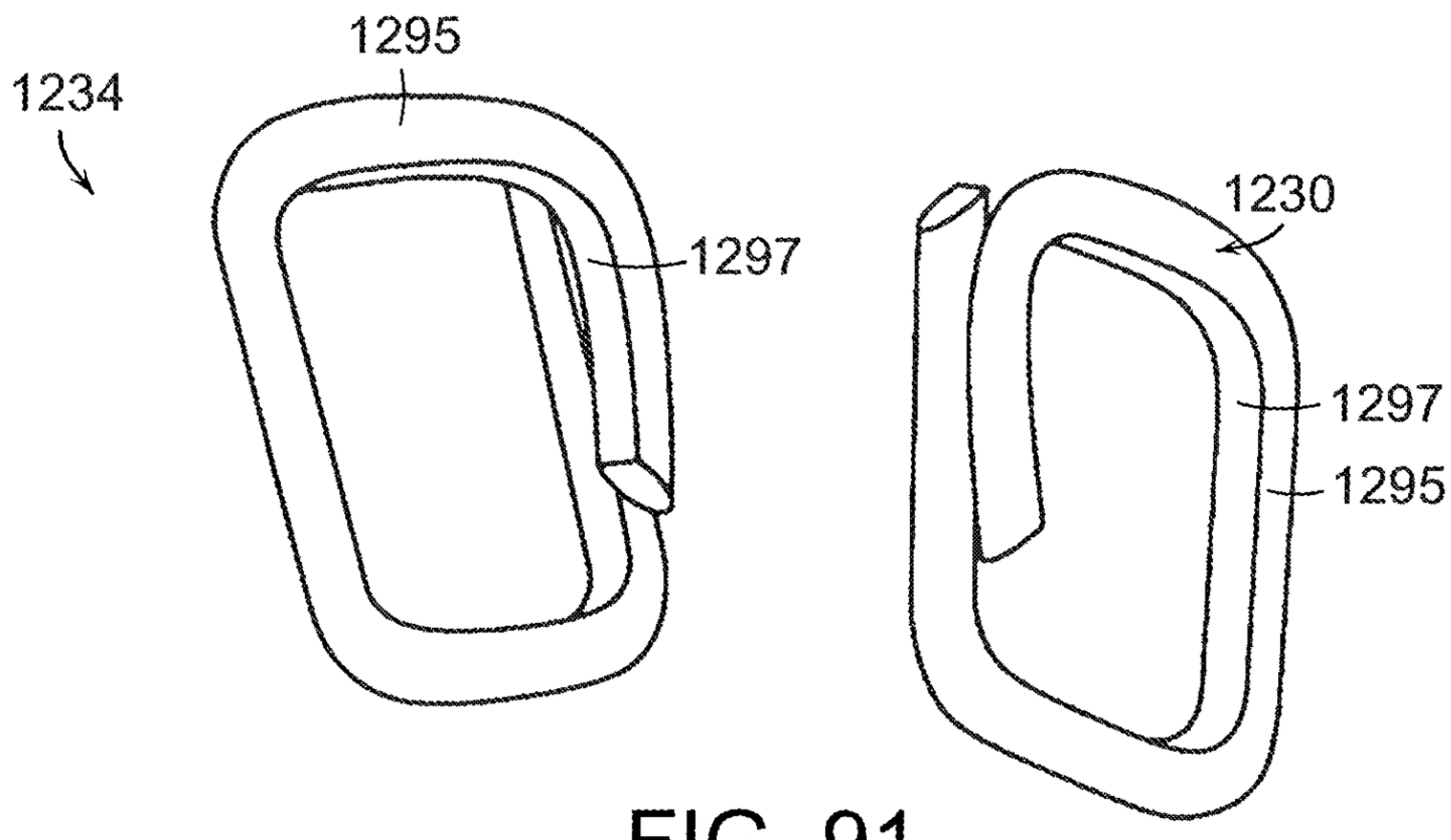
1295
1234
1297
1230
1297
1295

FIG. 91

# STAPLE CARTRIDGE COMPRISING A STAPLE DRIVER ARRANGEMENT

## CROSS-REFERENCE TO RELATED APPLICATIONS

This application is a continuation application claiming priority under 35 U.S.C. § 120 to U.S. patent application Ser. No. 13/965,877, entitled STAPLE CARTRIDGE COMPRISING A STAPLE DRIVER ARRANGEMENT, filed Aug. 13, 2013, which issued on Feb. 7, 2017 as U.S. Pat. No. 9,561,032, which is a continuation application claiming priority under 35 U.S.C. § 120 to U.S. patent application Ser. No. 13/072,923, entitled STAPLE CARTRIDGES FOR FORMING STAPLES HAVING DIFFERING FORMED STAPLE HEIGHTS, filed Mar. 28, 2011, which issued on Oct. 29, 2013 as U.S. Pat. No. 8,567,656, which is a continuation application claiming priority under 35 U.S.C. § 120 to U.S. patent application Ser. No. 12/038,939, entitled STAPLE CARTRIDGES FOR FORMING STAPLES HAVING DIFFERING FORMED STAPLE HEIGHTS, filed Feb. 28, 2008, which issued on May 3, 2011 as U.S. Pat. No. 7,934,630, which is a continuation-in-part application claiming priority under 35 U.S.C. § 120 to U.S. patent application Ser. No. 11/216,562, entitled STAPLE CARTRIDGES FOR FORMING STAPLES HAVING DIFFERING FORMED STAPLE HEIGHTS, filed on Aug. 31, 2005, which issued on Mar. 2, 2010 as U.S. Pat. No. 7,669,746; U.S. patent application Ser. No. 12/038,939, entitled STAPLE CARTRIDGES FOR FORMING STAPLES HAVING DIFFERING FORMED STAPLE HEIGHTS, filed Feb. 28, 2008, which issued on May 3, 2011 as U.S. Pat. No. 7,934,630 is a continuation-in-part application claiming priority under 35 U.S.C. § 120 to U.S. patent application Ser. No. 11/541,374, entitled SURGICAL STAPLES HAVING DISSOLVABLE, BIOABSORBABLE OR BIOFRAGMENTABLE PORTIONS AND STAPLING INSTRUMENTS FOR DEPLOYING THE SAME, filed on Sep. 29, 2006, which issued on Feb. 5, 2013 as U.S. Pat. No. 8,365,976; and U.S. patent application Ser. No. 12/038,939, entitled STAPLE CARTRIDGES FOR FORMING STAPLES HAVING DIFFERING FORMED STAPLE HEIGHTS, filed Feb. 28, 2008, which issued on May 3, 2011 as U.S. Pat. No. 7,934,630 is a continuation-in-part application claiming priority under 35 U.S.C. § 120 to U.S. patent application Ser. No. 11/824,251, entitled SURGICAL STAPLE HAVING A SLIDABLE CROWN, filed on Jun. 29, 2007, which issued on Mar. 31, 2015 as U.S. Pat. No. 8,991,676, the entire disclosures of which are hereby incorporated by reference herein.

## FIELD OF THE INVENTION

The present invention relates in general to stapling instruments that are capable of applying lines of staples and, more particularly, to improvements relating to staple cartridges for use with surgical stapling instruments that are capable of applying lines of staples having differing formed staple heights to tissue while simultaneously cutting the tissue.

## BACKGROUND OF THE INVENTION

Surgical staplers have been used in the prior art to simultaneously make a longitudinal incision in tissue and apply lines of staples on opposing sides of the incision. Such instruments commonly include a pair of cooperating jaw members that, if the instrument is intended for endoscopic or laparoscopic applications, are capable of passing through a



cannula passageway. One of the jaw members receives a staple cartridge having at least two laterally spaced rows of staples. The other jaw member defines an anvil having staple-forming pockets aligned with the rows of staples in the cartridge. The instrument includes a plurality of reciprocating wedges that, when driven distally, pass through openings in the staple cartridge and engage drivers supporting the staples to effect the firing of the staples toward the anvil.

An example of a surgical stapler suitable for endoscopic applications is described in U.S. Pat. No. 7,000,818, entitled SURGICAL STAPLING INSTRUMENT HAVING SEPARATE AND DISTINCT CLOSING AND FIRING SYSTEMS, which issued on Feb. 21, 2006, the entire disclosure of which is hereby incorporated by reference herein. In use, a clinician is able to close the jaw members of the stapler upon tissue to position the jaw members prior to firing. Once the clinician has determined that the jaw members are properly gripping tissue, the clinician can then fire the surgical stapler, thereby severing and stapling the tissue. The simultaneous severing and stapling avoids complications that may arise when performing such actions sequentially with different surgical tools that respectively only sever or staple.

Whenever a transection of tissue is across an area of varied tissue composition, it would be advantageous for the staples that are closest to the cut line to have one formed height that is less than the formed height of those staples that are farthest from the cut line. In practice, the rows of inside staples serve to provide a hemostatic barrier, while the outside rows of staples with larger formed heights provide a cinching effect where the tissue transitions from the tightly compressed hemostatic section to the non-compressed adjacent section. In other applications, it may be useful for the staples in a single line of staples to have differing formed heights. U.S. Pat. Nos. 4,941,623 and 5,027,834 disclose surgical stapler and cartridge arrangements that employ staples that have different prong lengths to ultimately achieve lines of staples that have differing formed heights. Likewise, WO 2003/094747 discloses a surgical stapler and cartridge that has six rows of staples wherein the outer two rows of staples comprise staples that are larger than the staples employed in the inner two rows and middle rows of staples. Although the above-disclosed staples and staple cartridges may be suitable for their intended purpose, what is needed is an improvement over the foregoing.

## BRIEF SUMMARY OF THE INVENTION

In at least one form of the invention, a staple cartridge can be configured to deploy staples in rows, where the staples in a first row can be deformed to a different height than the staples in a second row. In at least one embodiment, the staple cartridge can include a first driver for deploying a staple in the first row a first distance and a second driver for deploying a staple in the second row a second distance, wherein the first distance can differ from the second distance. Owing to the different distances in which the staples can be deployed, the staples can be deformed to various heights such that the staples within the first row can apply different clamping forces to soft tissue captured therein as compared to the staples within the second row.

In at least one form of the invention, a staple cartridge can include other various features which can deform staples to different heights and/or create different clamping forces within the staples. In various embodiments, the staples in a first row of a staple cartridge can include a crown, a

tissue-contacting surface on the crown, and a deformable member extending from the crown, where a first distance can be defined between the tissue-contacting surface and a bottom surface of the crown. The staples in a second row of the staple cartridge can also include a crown, a tissue-contacting surface on the crown, and a deformable member, where a second distance can be defined between the tissue-contacting surface and a bottom surface of the crown. In at least one such embodiment, the first distance can differ from the second distance such that the first staples can apply a first force to tissue captured therein and the second staples can apply a second force, where the first force can differ from the second force.

In at least one form of the invention, the crowns of various staples can include tissue-contacting surfaces which can comprise contact areas across which soft tissue can be supported by the crowns. In various embodiments, such tissue-contacting surfaces can reduce the clamping pressure applied by the staples. In at least one embodiment, staples which are deformed to shorter heights and/or apply a larger clamping force can include larger tissue-contacting surfaces as compared to the tissue-contacting surfaces of staples which are deformed to taller heights and/or apply a smaller clamping force so as to substantially equalize, or at least control, the pressures applied by the staples to soft tissue captured within the staples, for example. As a result, embodiments are envisioned in which the size of the tissue-contacting area and/or the anticipated deformed staple height can be selected to provide a larger and/or smaller clamping pressure to a particular area of the treated tissue.

## BRIEF DESCRIPTION OF THE FIGURES

The accompanying drawings, which are incorporated in and constitute a part of this specification, illustrate embodiments of the invention, and, together with the general description of the invention given above, and the detailed description of the embodiments given below, serve to explain the principles of the present invention.

FIG. **1** depicts a partially cut away side elevation view of a surgical stapling and severing instrument in an open position.

FIG. **2** depicts a cross-sectional side elevation detail view along the line **2-2** of FIG. **1** of an end effector of the surgical stapling and severing instrument.

FIG. **3** depicts an enlarged side elevation view of the firing bar of the surgical stapling and severing instrument of FIG. **2**.

FIG. **4** depicts an enlarged front view of the firing bar of the surgical stapling and severing instrument of FIG. **2**.

FIG. **5** depicts a cross-sectional side elevation detail view of an alternative end effector for the surgical stapling and severing instrument of FIG. **1**, incorporating a firing bar that lacks a middle pin for preventing pinching of the end effector.

FIG. **6** depicts a side elevational view of a handle portion of a proximal end of the surgical stapling and severing instrument of FIG. **1** with a left side removed to expose interior parts in an unclamped, unfired ("start") position.

FIG. **7** depicts a perspective, exploded view of the handle portion of the proximal end of the surgical stapling and severing instrument of FIG. **1**.

FIG. **8** depicts a side elevational view of the handle portion of the proximal end of the surgical stapling and severing instrument of FIG. **1** with the left side removed to expose interior parts in the closed ("clamped") position.

FIG. **9** depicts a side elevational view of the handle portion of proximal end of surgical stapling and severing instrument of FIG. **1** with the left side removed to expose interior parts in the stapled and severed ("fired") position.

FIG. **10** depicts a plan view of a staple cartridge installed in an end effector of an embodiment of the present invention.

FIG. **11** is an enlarged plan view of a portion of a staple cartridge embodiment of the present invention.

FIG. **12** is a side view of a staple that may be employed with various embodiments of the present invention.

FIG. **13** is a front elevational view of one inside double driver of one embodiment of the present invention supporting two staples thereon.

FIG. **14** is a top view of the inside double driver and staples of FIG. **13**.

FIG. **14**A is an elevational view of the inside double driver of FIG. **13** within a portion of a staple cartridge mounted in the end effector and also illustrating a corresponding portion of the anvil when in a closed position.

FIG. **15** is a right side elevational view of the inside double driver and staples of FIGS. **13** and **14**.

FIG. **15**A is another side elevational view of the inside double driver of FIG. **15** wherein corresponding portions of the cartridge tray and anvil are illustrated in broken lines to depict the relationships therebetween.

FIG. **16** is a front elevational view of one outside single driver of one embodiment of the present invention supporting a staple thereon.

FIG. **16**A is another front view of the outside single driver of FIG. **16** with portions of the cartridge tray and anvil shown to illustrate the relationships therebetween.

FIG. **17** is a top view of the outside single driver and staple of FIG. **16**.

FIG. **18** is an isometric exploded view of the implement portion of the surgical stapling and severing instrument of FIG. **1**.

FIG. **19** is a section view taken along line **19-19** of FIG. **10** showing the cross-sectional relationship between the firing bar, elongate channel, wedge sled, staple drivers, staples and staple cartridge.

FIG. **19**A is another cross-sectional view of an end effector embodiment of the present invention showing the cross-sectional relationship between the firing bar, elongate channel, wedge sled, staple drivers, staples, staple cartridge and anvil.

FIG. **20** is a perspective view of one wedge sled embodiment of the present invention.

FIG. **21** is a side elevational view of an inside sled cam of the wedge sled depicted in FIG. **20**.

FIG. **22** is a side elevational view of an outside sled cam of the wedge sled depicted in FIG. **20**.

FIG. **23** is an isometric view of the end effector at the distal end of the surgical stapling and severing instrument of FIG. **1** with the anvil in the up or open position with the cartridge largely removed exposing a single staple driver and a double staple driver as exemplary and the wedge sled in its start position against a middle pin of the firing bar.

FIG. **24** is an isometric view of the end effector at the distal end of the surgical stapling and severing instrument of FIG. **1** with the anvil in the up or open position exposing the staple cartridge and cutting edge of the firing bar.

FIG. **25** is an isometric view of the distal end of the surgical stapling and severing instrument of FIG. **1** with the anvil in the up or open position with the staple cartridge completely removed and a portion of an elongate channel removed to expose a lowermost pin of the firing bar.

FIG. **26** is a side elevation view in section showing a mechanical relationship between the anvil, elongate channel, and staple cartridge in the closed position of the surgical stapling and severing instrument of FIG. **1**, the section generally taken along lines **26-26** of FIG. **24** to expose wedge sled, staple drivers and staples but also depicting the firing bar along the longitudinal centerline.

FIG. **27** is a cross-sectional view of a portion of one embodiment of a staple cartridge of the present invention wherein an outside cam of a wedge is adjacent to an outside single driver.

FIG. **28** is a cross-sectional view of a portion of one embodiment of a staple cartridge of the present invention wherein an outside cam of a wedge sled is engaging three outside single drivers.

FIG. **29** is a diagrammatic representation of lines of staples installed on each side of a cut line using a surgical stapling and severing instrument of one embodiment of the present invention.

FIG. **30** depicts a staple formed by one inside driver embodiment of the present invention.

FIG. **31** depicts another staple formed by one outside driver embodiment of the present invention.

FIG. **32** is a diagrammatic representation of lines of staples installed on each side of a cut line using a surgical stapling and severing instrument of another embodiment of the present invention.

FIG. **33** is a diagrammatic representation of lines of staples installed on each side of a cut line using a surgical stapling and severing instrument of another embodiment of the present invention.

FIG. **34** is a diagrammatic representation of lines of staples installed on each side of a cut line using a surgical stapling and severing instrument of another embodiment of the present invention.

FIG. **35** is a side elevation section view of the surgical stapling and severing instrument of FIG. **1** taken along the longitudinal centerline of the end effector in a partially closed but unclamped position gripping tissue.

FIG. **36** depicts a partially cut away side elevational view of the surgical stapling and severing instrument of FIG. **1** in the closed or clamped position.

FIG. **37** depicts a side elevation view of the surgical stapling and severing instrument of FIG. **1** in the closed or clamped position with tissue properly compressed.

FIG. **38** depicts a view in centerline section of the distal end of the surgical stapling and severing instrument of FIG. **1** in a partially fired position.

FIG. **39** depicts a partially cut away side elevation view of the surgical stapling and severing instrument of FIG. **1** in a partially fired position.

FIG. **40** depicts a view in centerline section of the distal end of the surgical stapling and severing instrument of FIG. **1** in a fully fired position.

FIG. **41** is a partially cut-away side elevational view of the surgical stapling and severing instrument of FIG. **1** in a full fired position.

FIG. **42** is an elevation view of a surgical staple for use with a surgical stapling and severing instrument of one embodiment of the present invention.

FIG. **43** is a diagrammatic representation of lines of staples installed on each side of a cut line using a surgical stapling and severing instrument of one embodiment of the present invention.

FIG. **44** is a cross-sectional view of a staple cartridge for use with a surgical stapling and severing instrument of one embodiment of the present invention utilizing staples having different leg lengths.

FIG. **45** is a cross-sectional view of another staple cartridge for use with a surgical stapling and severing instrument of one embodiment of the present invention utilizing staples having different leg lengths.

FIG. **46** is a cross-sectional view of a staple cartridge for use with a surgical stapling and severing instrument of one embodiment of the present invention utilizing staples having substantially the same length.

FIG. **47** is a cross-sectional view of another staple cartridge for use with a surgical stapling and severing instrument of one embodiment of the present invention utilizing staples having substantially the same length.

FIG. **48** is a diagrammic representation of staples having different deformed heights for securing transected tissue.

FIG. **49** is an elevation view of a surgical staple including two connected fastener portions for use with a surgical stapling and severing instrument of one embodiment of the present invention.

FIG. **50** is a perspective view of two unconnected fastener portions of a surgical staple for use with a surgical stapling and severing instrument of one embodiment of the present invention.

FIG. **51** is a perspective view of the fastener portions of FIG. **50** after a crown has been overmolded thereon to connect the fastener portions to form the surgical staple.

FIG. **52** is a perspective view of the surgical staple of FIG. **51** after the fastener portions have been deformed.

FIG. **53** is a perspective view of the surgical staple of FIG. **51** after at least a portion of the crown has dissolved to separate the fastener portions.

FIG. **54** is a perspective view of the surgical staple of FIG. **51** after the crown has completely dissolved.

FIG. **55** is an elevation view of a surgical staple having dissolvable portions for use with a surgical stapling and severing instrument of one embodiment of the present invention.

FIG. **56**A is an elevation view of a surgical staple having dissolvable portions for use with a surgical stapling and severing instrument of one embodiment of the present invention.

FIG. **56**B is an elevation view of an alternative embodiment to FIG. **56**A.

FIG. **57** is an elevation view of a surgical staple having a slidable crown in accordance with one embodiment of the present invention.

FIG. **58** is an elevation view of another surgical staple having a slidable crown in accordance with one embodiment of the present invention.

FIG. **59** is an elevation view of another surgical staple having a slidable crown in accordance with one embodiment of the present invention.

FIG. **60** is a bottom view of the surgical staple of FIG. **57**.

FIG. **61** is a bottom view of the surgical staple of FIG. **58**.

FIG. **62** is a bottom view of the surgical staple of FIG. **59**.

FIG. **63** is a top view of the surgical staple of FIG. **57**.

FIG. **64** is a top view of the surgical staple of FIG. **58**.

FIG. **65** is a top view of the surgical staple of FIG. **59**.

FIG. **66** is a perspective cross-sectional view of a non-deployed surgical staple of FIG. **57** positioned within a staple cartridge in accordance with one embodiment of the present invention.

FIG. **67** is a perspective cross-sectional view of the staple of FIG. **66** in a partially deployed position from the staple cartridge.

FIG. **68** is a perspective view of the staple of FIG. **66** in a fully deployed position from the staple cartridge.

FIG. **69** is a perspective cross-sectional view of the staple of FIG. **66** in a fully deployed position.

FIG. **70** is an elevation view of a surgical staple having a slidable crown in accordance with one embodiment of the present invention.

FIG. **71** is an elevation view of the slidable crown of FIG. **70** moved relative to the deformable members of the surgical staple.

FIG. **72** is an elevation view of the staple of FIG. **70** deformed to a first height.

FIG. **73** is an elevation view of the staple of FIG. **70** deformed to a second height.

FIG. **74** is a partial plan view of a staple cartridge in accordance with one embodiment of the present invention.

FIG. **75** is a detail view of a staple cavity of the staple cartridge of FIG. **74**.

FIG. **76** is a cross-sectional view of the staple cartridge of FIG. **74** taken along line **76-76** in FIG. **74**.

FIG. **77** is an elevation view of a surgical staple including a crown having a first crown height in accordance with one embodiment of the present invention.

FIG. **78** is an elevation view of a surgical staple including a crown having a second crown height which is larger than the first crown height of the staple of FIG. **77** in accordance with one embodiment of the present invention.

FIG. **79** is an elevation view of a surgical staple including a crown having a third crown height which is larger than the second crown height of the staple of FIG. **78** in accordance with one embodiment of the present invention.

FIG. **80** is a diagrammatic representation of rings of staples installed using a surgical stapling and severing instrument of one embodiment of the present invention.

FIG. **81** is a perspective view of first and second deformable members having an expandable coating formed thereon in accordance with one embodiment of the present invention.

FIG. **82** is a top view of the deformable members of FIG. **81**.

FIG. **83** is a perspective view of a dissolvable, or bioabsorbable, material overmolded onto the first and second deformable members of FIG. **81** in accordance with one embodiment of the present invention.

FIG. **84** is a perspective view of the staple of FIG. **83** in a deformed configuration.

FIG. **85** is a perspective view of the staple of FIG. **83** after at least a portion of the dissolvable material has dissolved and the expandable material has expanded.

FIG. **86** is a top view of the staple of FIG. **83** illustrating the expandable coating in an expanded form.

FIG. **87** is a perspective view of the staple of FIG. **83** after the dissolvable material and the expandable material has completely dissolved.

FIG. **88** is a perspective view of a dissolvable, or bioabsorbable, material overmolded onto deformable members in accordance with one embodiment of the present invention.

FIG. **89** is a perspective view of the staple of FIG. **88** in a deformed shape.

FIG. **90** is a perspective view of the staple of FIG. **88** wherein a portion of the dissolvable material has been dissolved and the first and second deformable members have moved relative to one another.

FIG. **91** is a perspective view of the staple of FIG. **88** after the dissolvable or bioabsorbable material has completely dissolved.

## DETAILED DESCRIPTION OF THE INVENTION

Turning to the Drawings, wherein like numerals denote like components throughout the several views, FIGS. **1** and **2** depict one embodiment of a surgical stapling and severing instrument **10** that is capable of practicing the unique benefits of the present invention. As the present Detailed Description proceeds, the reader will appreciate, however, that the unique and novel aspects of the present invention may be advantageously employed in connection with a variety of other staplers and stapler instruments without departing from the spirit and scope of the present invention. Accordingly, the scope of protection afforded to the various embodiments of the present invention should not be limited to use only with the specific type of surgical stapling and severing instruments described herein.

As can be seen in FIGS. **1** and **2**, the surgical stapling and severing instrument **10** incorporates an end effector **12** having an actuator or E-beam firing mechanism ("firing bar") **14** that advantageously controls the spacing of the end effector **12**. In particular, an elongate channel **16** and a pivotally translatable anvil **18** are maintained at a spacing that assures effective stapling and severing. The problems are avoided associated with varying amounts of tissue being captured in the end effector **12**.

It will be appreciated that the terms "proximal" and "distal" are used herein with reference to a clinician gripping a handle of an instrument. Thus, the end effector **12** is distal with respect to the more proximal handle portion **20**. It will be further appreciated that for convenience and clarity, spatial terms such as "vertical" and "horizontal" are used herein with respect to the drawings. However, surgical instruments are used in many orientations and positions, and these terms are not intended to be limiting and absolute.

The surgical and stapling and severing instrument **10** includes a handle portion **20** that is connected to an implement portion **22**, the latter further comprising a shaft **23** distally terminating in the end effector **12**. The handle portion **20** includes a pistol grip **24** toward which a closure trigger **26** is pivotally drawn by the clinician to cause clamping, or closing, of the anvil **18** toward the elongate channel **16** of the end effector **12**. A firing trigger **28** is farther outboard of the closure trigger **26** and is pivotally drawn by the clinician to cause the stapling and severing of clamped tissue in the end effector **12**.

In practice, closure trigger **26** is actuated first. Once the clinician is satisfied with the positioning of the end effector **12**, the clinician may draw back the closure trigger **26** to its fully closed, locked position proximate to the pistol grip **24**. Then, the firing trigger **28** is actuated. The firing trigger **28** springedly returns when the clinician removes pressure. A release button **30** when depressed on the proximal end of the handle portion **20** releases any locked closure trigger **26**.

A closure sleeve **32** encloses a frame **34**, which in turn encloses a firing drive member **36** that is positioned by the firing trigger **28**. The frame **34** connects the handle portion **20** to the end effector **12**. With the closure sleeve **32** withdrawn proximally by the closure trigger **26** as depicted, the anvil **18** springedly opens, pivoting away from the elongate channel **16** and translating proximally with the closure sleeve **32**. The elongate channel **16** receives a staple cartridge **37**.

With particular reference to FIGS. **2-4**, the firing bar **14** includes three vertically spaced pins that control the spacing of the end effector **12** during firing. In particular, an upper pin **38** is staged to enter an anvil pocket **40** near the pivot between the anvil **18** and elongate channel **16**. When fired with the anvil **18** closed, the upper pin **38** advances distally within a longitudinal anvil slot **42** extending distally through anvil **18**. Any minor upward deflection in the anvil **18** is overcome by a downward force imparted by the upper pin **38**. Firing bar **14** also includes a lowermost pin, or firing bar cap, **44** that upwardly engages a channel slot **45** in the elongate channel **16**, thereby cooperating with the upper pin **38** to draw the anvil **18** and the elongate channel **16** slightly closer together in the event of excess tissue clamped therebetween. The firing bar **14** advantageously includes a middle pin **46** that passes through a firing drive slot **47** formed in a lower surface of the cartridge **300** and an upward surface of the elongate channel **16**, thereby driving the staples therein as described below. The middle pin **46**, by sliding against the elongate channel **16**, advantageously resists any tendency for the end effector **12** to be pinched shut at its distal end. To illustrate an advantage of the middle pin **46**, FIG. **5** depicts an alternative end effector **12'** that lacks a middle pin on a firing bar **14'**. In this depiction, the end effector **12'** is allowed to pinch shut at its distal end, which tends to impair desired staple formation.

Returning to FIGS. **2-4**, a distally presented cutting edge **48** between the upper and middle pins **38**, **46** on the firing bar **14** traverses through a proximally presented, vertical slot **49** in the cartridge **37** to sever clamped tissue. The affirmative positioning of the firing bar **14** with regard to the elongate channel **16** and anvil **18** assure that an effective cut is performed. The affirmative vertical spacing provided by the E-Beam firing bar **14** is suitable for the limited size available for endoscopic devices. Moreover, the E-Beam firing bar **14** enables fabrication of an anvil **15** with a camber imparting a vertical deflection at its distal end, similar to the position depicted in FIG. **5**. This cambered anvil **15** advantageously assists in achieving the desired gap in the end effector **12** even with an anvil **15** having a reduced thickness, which may be more suited to the size limitations of an endoscopic device.

With reference to FIGS. **6-9**, the handle portion **20** is comprised of first and second base sections **50** and **52**, which are molded from a polymeric material such as a glass-filled polycarbonate. The first base section **50** is provided with a plurality of cylindrically-shaped pins **54**. The second base section **52** includes a plurality of extending members **56**, each having a hexagonal-shaped opening **58**. The cylindrically-shaped pins **54** are received within the hexagonal-shaped openings **58** and are frictionally held therein for maintaining the first and second base sections **50** and **52** in assembly.

A rotating knob **60** has a bore **62** extending completely through it for engaging and rotating the implement portion **22** about its longitudinal axis. The rotating knob **60** includes an inwardly protruding boss **64** extending along at least a portion of the bore **62**. The protruding boss **64** is received within a longitudinal slot **66** formed at a proximal portion of the closure sleeve **32** such that rotation of the rotating knob **60** effects rotation of the closure sleeve **32**. It will be appreciated that the boss **64** further extends through frame **34** and into contact with a portion of the firing drive member **36** to effect their rotation as well. Thus, the end effector **12** (not shown in FIGS. **6-9**) rotates with the rotating knob **60**.

A proximal end **68** of the frame **34** passes proximally through the rotating knob **60** and is provided with a circumferential notch **70** that is engaged by opposing channel securement members **72** extending respectively from the base sections **50** and **52**. Only the channel securement member **72** of the second base section **52** is shown. The channel securement members **72**, extending from the base sections **50**, **52** serve to secure the frame **34** to the handle portion **20** such that the frame **34** does not move longitudinally relative to the handle portion **20**. The closure trigger **26** has a handle section **74**, a gear segment section **76**, and an intermediate section **78**. A bore **80** extends through the intermediate section **78**. A cylindrical support member **82** extending from the second base section **52** passes through the bore **80** for pivotably mounting the closure trigger **26** on the handle portion **20**. A second cylindrical support member **83** extending from the second base section **52** passes through a bore **81** of firing trigger **28** for pivotally mounting on the handle portion **20**. A hexagonal opening **84** is provided in the cylindrical support member **83** for receiving a securement pin (not shown) extending from the first base section **50**.

A closure yoke **86** is housed within the handle portion **20** for reciprocating movement therein and serves to transfer motion from the closure trigger **26** to the closure sleeve **32**. Support members **88** extending from the second base section **52** and securement member **72**, which extends through a recess **89** in the yoke **86**, support the yoke **86** within the handle portion **20**.

A proximal end **90** of the closure sleeve **32** is provided with a flange **92** that is snap-fitted into a receiving recess **94** formed in a distal end **96** of the yoke **86**. A proximal end **98** of the yoke **86** has a gear rack **100** that is engaged by the gear segment section **76** of the closure trigger **26**. When the closure trigger **26** is moved toward the pistol grip **24** of the handle portion **20**, the yoke **86** and, hence, the closure sleeve **32** move distally, compressing a spring **102** that biases the yoke **86** proximally. Distal movement of the closure sleeve **32** effects pivotal translation movement of the anvil **18** distally and toward the elongate channel **16** of the end effector **12** and proximal movement effects closing, as discussed below.

The closure trigger **26** is forward biased to an open position by a front surface **130** interacting with an engaging surface **128** of the firing trigger **28**. Clamp first hook **104** that pivots top to rear in the handle portion **20** about a pin **106** restrains movement of the firing trigger **28** toward the pistol grip **24** until the closure trigger **26** is clamped to its closed position. Hook **104** restrains firing trigger **28** motion by engaging a lockout pin **107** in firing trigger **28**. The hook **104** is also in contact with the closure trigger **26**. In particular, a forward projection **108** of the hook **104** engages a member **110** on the intermediate section **78** of the closure trigger **26**, the member **100** being outward of the bore **80** toward the handle section **74**. Hook **104** is biased toward contact with member **110** of the closure trigger **26** and engagement with lockout pin **107** in firing trigger **28** by a release spring **112**. As the closure trigger **26** is depressed, the hook **104** is moved top to rear, compressing the release spring **112** that is captured between a rearward projection **114** on the hook **104** and a forward projection **116** on the release button **30**. As the yoke **86** moves distally in response to proximal movement of the closure trigger **26**, an upper latch arm **118** of the release button **30** moves along an upper surface **120** on the yoke **86** until dropping into an upwardly presented recess **122** in a proximal, lower portion of the yoke **86**. The release spring **112** urges the release button **30** outward, which pivots the upper latch arm **118** downwardly into engagement with the upwardly presented recess **122**,

thereby locking the closure trigger **26** in a tissue clamping position, such as depicted in FIG. **8**.

The latch arm **118** can be moved out of the recess **122** to release the anvil **18** by pushing the release button **30** inward. Specifically, the upper latch arm **118** pivots upward about pin **123** of the second base section **52**. The yoke **86** is then permitted to move proximally in response to return movement of the closure trigger **26**.

A firing trigger return spring **124** is located within the handle portion **20** with one end attached to pin **106** of the second base section **52** and the other end attached to a pin **126** on the firing trigger **28**. The firing return spring **124** applies a return force to the pin **126** for biasing the firing trigger **28** in a direction away from the pistol grip **24** of the handle portion **20**. The closure trigger **26** is also biased away from pistol grip **24** by engaging surface **128** of firing trigger **28** biasing front surface **130** of closure trigger **26**.

As the closure trigger **26** is moved toward the pistol grip **24**, its front surface **130** engages with the engaging surface **128** on the firing trigger **28** causing the firing trigger **28** to move to its "firing" position. When in its firing position, the firing trigger **28** is located at an angle of approximately 45° to the pistol grip **24**. After staple firing, the spring **124** causes the firing trigger **28** to return to its initial position. During the return movement of the firing trigger **28**, its engaging surface **128** pushes against the front surface **130** of the closure trigger **26** causing the closure trigger **26** to return to its initial position. A stop member **132** extends from the second base section **52** to prevent the closure trigger **26** from rotating beyond its initial position.

The surgical stapling and severing instrument **10** additionally includes a reciprocating section **134**, a multiplier **136** and a drive member **138**. The reciprocating section **134** comprises a wedge sled in the implement portion **22** (not shown in FIGS. **6-9**) and a metal drive rod **140**.

The drive member **138** includes first and second gear racks **141** and **142**. A first notch **144** is provided on the drive member **138** intermediate the first and second gear racks **141**, **142**. During return movement of the firing trigger **28**, a tooth **146** on the firing trigger **28** engages with the first notch **144** for returning the drive member **138** to its initial position after staple firing. A second notch **148** is located at a proximal end of the metal drive rod **140** for locking the metal drive rod **140** to the upper latch arm **118** of the release button **30** in its unfired position.

The multiplier **136** comprises first and second integral pinion gears **150** and **152**. The first integral pinion gear **150** is engaged with a first gear rack **154** provided on the metal drive rod **140**. The second integral pinion gear **152** is engaged with the first gear rack **141** on the drive member **138**. The first integral pinion gear **150** has a first diameter and the second integral pinion gear **152** has a second diameter which is smaller than the first diameter.

FIGS. **6**, **8** and **9** depict respectively the handle portion **20** in the start position (open and unfired), a clamped position (closed and unfired) and a fired position. The firing trigger **28** is provided with a gear segment section **156**. The gear segment section **156** engages with the second gear rack **142** on the drive member **138** such that motion of the firing trigger **28** causes the drive member **138** to move back and forth between a first drive position, shown in FIG. **8**, and a second drive position, shown in FIG. **9**. In order to prevent staple firing before tissue clamping has occurred, the upper latch arm **118** on the release button **39** is engaged with the second notch **148** on the drive member **138** such that the metal drive rod **140** is locked in its proximal-most position, as depicted in FIG. **6**. When the upper latch arm **118** falls into the recess **122**, the upper latch arm **118** disengages with the second notch **148** to permit distal movement of the metal drive rod **140**, as depicted in FIG. **9**.

Because the first gear rack **141** on the drive member **138** and the gear rack **154** on the metal drive rod **140** are engaged with the multiplier **136**, movement of the firing trigger **28** causes the metal drive rod **140** to reciprocate between a first reciprocating position, shown in FIG. **8**, and a second reciprocating position, shown in FIG. **9**. Since the diameter of the first pinion gear **150** is greater than the diameter of the second pinion gear **152**, the multiplier **136** moves the reciprocating section **134** a greater distance than the drive member **138** is moved by the firing trigger **28**. The diameters of the first and second pinion gears **150** and **152** may be changed to permit the length of the stroke of the firing trigger **28** and the force required to move it to be varied. It will be appreciated that the handle portion **20** is illustrative and that other actuation mechanisms may be employed. For instance, the closing and firing motions may be generated by automated means.

One embodiment of an end effector **12** of the surgical stapling and severing instrument **10** is depicted in further detail in FIGS. **18**, **19**, and **23-26**. As described above, the handle portion **20** produces separate and distinct closing and firing motions that actuate the end effector **12**. The end effector **12** advantageously maintains the clinical flexibility of this separate and distinct closing and firing (i.e., stapling and severing). In addition, the end effector **12** introduces the aforementioned ability to affirmatively maintain the closed spacing during firing after the clinician positions and clamps the tissue. Both features procedurally and structurally enhance the ability of the surgical stapling and severing instrument **10** by ensuring adequate spacing for instances where an otherwise inadequate amount of tissue is clamped and to enhance the clamping in instances where an otherwise excessive amount of tissue has been clamped. FIG. **10** depicts a staple cartridge embodiment **300** of the present invention installed in the end effector **12** with the firing bar **14** in its unfired, proximal position. The staple cartridge **300** has a cartridge body **302** that is divided by an elongated slot **310** that extends from a proximal end **304** of the cartridge **300** towards a tapered outer tip **306**. A plurality of staple-receiving channels **320*a*-320*f*** are formed within the staple cartridge body **302** and are arranged in six laterally spaced longitudinal rows **500**, **502**, **504**, **506**, **508**, **510**, with three rows on each side of the elongated slot **310**. Positioned within the staple-receiving channels **320*a*-320*f*** are the staples **222**. See FIGS. **10** and **11**.

The cartridge **300** further includes four laterally spaced longitudinal rows of staple drivers **330*a***, **330*b***, **370*a***, and **370*b*** as shown in FIG. **11**. The "first" inside staple drivers **330*a*** are slidably mounted within corresponding channels **320*b*** and **320*c*** such that each driver **330*a*** supports two staples **222**, one in a channel **320*b*** and one in a channel **320*c***. Likewise, the "second" inside drivers **330*b*** are slidably mounted within channels **320*d*** and **320*e*** such that each driver **330*b*** supports two staples **222**, one in a channel **320*d*** and one in a channel **320*e***. The "outside" drivers **370*a*** and **370*b*** are slidably mounted within the staple-receiving channels **320*a*** and **320*f***, respectively. Each of the outside drivers **370*a*** and **370*b*** supports a single staple **222**. Drivers **370*a*** are referred to herein as "first" outside drivers and drivers **370*b*** are referred to herein as "second" outside drivers.

FIG. **12** illustrates a staple **222** that may be used in connection with the various embodiments of the present invention. The staple **222** includes a main portion **223** and two prongs **225**. The prongs **225** each have a length "P" and

the main portion has a width "W". The reader will appreciate that a variety of different types of staples may be employed. For example, for a vascular staple, "P" may be approximately 0.102 inches; for a regular staple, "P" may be approximately 0.134 inches; and for a thick tissue staple, "P" may be approximately 0.160 inches. For all such staples, "W" may be approximately 0.120 inches. Other sizes of staples **222** may be employed in the manners discussed below.

The inside staple drivers **330***a* located on one side of the elongated slot **310** are referred to herein as "first" inside staple drivers and the inside staple drivers **330***b* located on the other side of the elongated slot **310** are referred to herein as "second" inside staple drivers. As will be discussed in further detail below, in one embodiment, the second inside staple drivers **330***b* are identical to the first inside staple drivers **330***a*, except for their orientation in their respective channels in the cartridge body **302**.

FIGS. **13-15** illustrate one embodiment of a "first" inside double driver **330***a* for supporting and driving staples **222**. As can be seen in those Figures, the staple driver **330***a* has a primary driver portion **340** and a secondary driver portion **350** that is connected to the first primary portion **340** by a central base member **360**. The primary driver portion **340** has a primary driver base **342** that has a groove **343** therein adapted to mate with a corresponding vertically extending tongue (not shown) in the cartridge body **302** for guiding and stabilizing the driver **330***a* as it moves within its respective channel. The primary driver portion **340** further has a first forward support column **344** and a first rearward support column **346** protruding upward from the first driver base **342**. The first forward support column **344** has a first forward staple-receiving groove **345** therein and the first rearward support column **346** has a first rearwardly staple-receiving groove **347** therein. See FIGS. **13-15**. The first forward support column **344** and the first rearward support column **346** are spaced from each other and collectively form a first staple cradle **348** for supporting the main portion **223** of the staple **222** therein.

Similarly, the secondary driver portion **350** has a secondary driver base **352** and a secondary forward support column **354** and a secondary rearward support column **356** protruding out from the second driver base **352**. The secondary forward support column **354** has a secondary forward staple-receiving groove **355** therein and the secondary rearward support column **356** has a secondary rearward staple-receiving groove **357** therein. The secondary forward support column **354** and the secondary rearward support column **356** are spaced from each other and collectively form a secondary staple cradle **358** for supporting the main portion **223** of another staple **222** therein.

As can be seen in FIGS. **13** and **15**, the central base member **360** has an angled rearwardly facing edge **362** adapted to be engaged by a corresponding sled cam as will be discussed in further detail below. As can be seen in FIGS. **13** and **14**, in this embodiment, the secondary forward support column **354** of the secondary driver portion is oriented relative to the first rearward support column **346** such that the staple **222** that is supported in the secondary staple cradle **358** is longitudinally offset from the staple **222** in the first staple cradle **348**. The reader will appreciate that the first inside drivers **330***a* are each installed in one orientation into a corresponding pair of channels **320***b* and **320***c* located on one side of the elongated slot **310** in the cartridge body **302**. The second inside staple drivers **330***b* (located on the opposite side of the elongated slot **310** from the first inside staple drivers **330***a*) comprise inside drivers **330***a* rotated 180 degrees so that their respective angled surfaces **363** face towards the proximal end **304** of the cartridge **300** to enable them to be installed in pairs of corresponding channels **320***d* and **320***e*. Thus, in this embodiment, only one inside driver configuration is employed which thereby eliminates the need for two different inside staple driver configurations for channels on each side of the elongated slot **310**.

FIGS. **16** and **17** illustrate one embodiment of a "first" outside staple driver **370***a*. As can be seen in those Figures, a first outside staple driver **370***a* has a second base **372** that has an angled rearwardly facing portion **374**. Protruding upward from the second base **372** is a second forward support column **375** that has a second forward staple-receiving groove **376** therein. A second rearward support column **377** also protrudes upward from the second base **372** in a spaced-apart relationship with respect to the second forward support column **375**. The second rearward support column **377** has a second rearward staple-receiving groove **378** therein. The support columns **375**, **377** collectively form a second staple cradle **379** that is configured to support a staple **222** therein as illustrated in FIGS. **16** and **17**. The staple drivers **370***a* also have a laterally protruding rib **371** which is received in a corresponding groove (not shown) in the cartridge body **302** for guiding and stabilizing the driver **370***a* as it moves within its respective channel.

The reader will appreciate that a first outside driver **370***a* is installed in one orientation into a corresponding channel **320***a* on one side of the elongated slot **310**. A second outside staple driver **370***b* (to be located on the opposite side of the elongated slot **310** from the first outside staple drivers **370***a*) comprises an outside driver **370***a* rotated 180 degrees so that the angled surface **374'** thereon faces toward the proximal end **304** of the cartridge **300** to enable it to be installed in a corresponding channel **320***f* in the cartridge body **302**. Thus, in this embodiment, only one outside staple driver configuration is employed which avoids the need for two different outside staple driver configurations for channels on each side of the elongated slot **310**.

FIGS. **19** and **19**A illustrate in cross-section one embodiment of a staple cartridge of the present invention mounted within one type of end effector **12**. The end effector **12** in this embodiment employs a "stepped" anvil **18** of the type illustrated in FIGS. **23-25**. In other embodiments, however, the bottom surface of the anvil is planar and not stepped. As can be seen in FIGS. **19**A, and **23-25**, the anvil **18** has a central portion **19** that is offset or not coplanar with the two lateral side portions **21**, **23**. Accordingly, in this embodiment, the upper surface **306** of the cartridge **300** is provided with a recessed central portion **307** and two lateral side portions **309** that are adapted to closely mate with the corresponding portions **19**, **21**, **23**, respectively, of the anvil **18**, when the anvil **18** is in the closed position. See FIG. **19**A. As can be seen in FIG. **24**, in this embodiment, the under surfaces **200** of anvil **18** are provided with a series of forming pockets **202** that may be arranged in rows that correspond to the rows of channels in the cartridge **300**. That is, row **205** of pockets **202** may correspond to channel row **500**. Row **207** of pockets may correspond to channel row **502**. Row **209** of pockets **202** may correspond to channel row **504**. Row **211** of pockets **202** may correspond to channel row **506**. Row **213** of pockets **202** may correspond to channel row **508**. Row **215** of pockets **202** may correspond to channel row **510**. Each pocket **202** has at least one forming surface **203** therein that is adapted to contact the ends of the staple prongs **225** being driven therein to thereby cause the prongs **225** to bend inwardly toward each other. In one embodiment, each pocket **202** has two intersecting

arcuate forming surfaces **203** that are oriented as shown in FIG. **14**A. Each arcuate forming surface has an apex **203'** that defines a maximum pocket depth "Z". However other forming pocket configurations could be employed.

Returning to FIGS. **18** and **19**, it can be seen that in one embodiment, the cartridge body **302** is mounted within the cartridge tray **224**. As illustrated in FIG. **19**, the cartridge body **302** is formed with two inside longitudinally extending slots **390** and two outside longitudinally extending slots **392**. Slots **390** and **392** extend from the proximal end **304** of the cartridge to its tapered outer tip **306** (shown in FIG. **10**). This embodiment further includes a wedge sled **400** that slidably supported on the cartridge tray **224**. One wedge sled embodiment **400** includes a pair of inside sled cams **410**, wherein one inside sled cam **410** corresponds to one of the inside longitudinally extending slots **390** and wherein the other inside sled cam **410** corresponds to the other inside longitudinally extending slot **390**. See FIG. **19**. The wedge sled **400** further includes a pair of outside sled cams **420**, wherein one outside sled cam **420** corresponds to one of the outside longitudinally extending slots **392** and the other outside sled cam **420** corresponds to the other outside longitudinally extending slot **392** as shown in FIG. **19**. When assembled, the cartridge tray **224** holds the wedge sled **400** and the drivers **330***a*, **330***b*, **370***a*, **370***b* inside the cartridge body **302**.

As can be seen in FIG. **18**, the elongate channel **16** has a proximally placed attachment cavity **226** that receives a channel anchoring member **228** on the distal end of the frame **34** for attaching the end effector **12** to the handle portion **20**. The elongate channel **16** also has an anvil cam slot **230** that pivotally receives an anvil pivot **232** of the anvil **18**. The closure sleeve **32** that encompasses the frame **34** includes a distally presented tab **234** that engages an anvil feature **236** proximate but distal to the anvil pivot **232** on the anvil **18** to thereby effect opening and closing of the anvil **18**. The firing drive member **36** is shown as being assembled from the firing bar **14** attached to a firing connector **238** by pins **240**, which in turn is rotatingly and proximally attached to the metal drive rod **140**. The firing bar **14** is guided at a distal end of the frame by a slotted guide **239** inserted therein.

FIGS. **20-23** illustrate one embodiment of the wedge sled **400** of the present invention. As can be seen in FIGS. **20** and **23**, the wedge sled **400** includes a central spacer portion **402** that extends between the inside sled cams **410**. A pusher block **404** is formed on the central spacer portion **402** for engagement with the middle pin **46** of the firing bar **14**. A side profile of one embodiment of an inside sled cam **410** is depicted in FIG. **21**. As can be seen in that FIG., the inside sled cam **410** has a bottom surface **412**, and a first camming surface **414** that forms an angle "G" with the bottom surface **412** and a second camming surface **415** that extends to a top surface **416**. In one embodiment, for example, the angle "G" may be 35 degrees and the angle "G'" may be 20 degrees. The height of the inside sled cam **410** (the distance between the bottom surface **412** and the top surface **416**) is represented as "first" sled cam height "H". In one embodiment, distance "H' is approximately 0.173 inches and the length of the top surface **416** may vary from embodiment to embodiment. As will be further evident as the present Detailed Description proceeds, the first sled cam height represents the vertical distance that the inside sled cams **410** will drive the corresponding inside drivers **330***a*, **330***b* toward the anvil **18** during operation.

The wedge sled **400** further comprises lateral spacer portions **406** that extend between the inside sled cams **410** and the outside sled cams **420** as shown in FIGS. **20** and **23**. A side profile of one embodiment of an outside sled cam **420** is depicted in FIG. **22**. In this embodiment, the outside sled cam **420** has a bottom surface **422** and a first camming surface **424** that forms an angle "I" with respect to the bottom surface **422** and a second camming surface **425** that to a top surface **426**. In one embodiment, angle "I" may be approximately 35 degrees and angle "I'" may be approximately 20 degrees. The height of the outside sled cam **420** (the distance between the bottom surface **412** and the top surface **416**) is represented as the "second" sled cam height "J". In one embodiment, distance "J' is approximately 0.163 inches. The second sled cam height represents the vertical distance that the outside sled cams **420** will drive the corresponding outside drivers **370***a*, **370***b* toward the anvil **18** during operation. The reader will understand that the above-recited dimensions are illustrative of one embodiment and may vary for other embodiments.

With particular reference to FIG. **23**, a portion of the staple cartridge **300** is removed to expose portions of the elongate channel **16**, such as recesses **212**, **214** and to expose some components of the staple cartridge **300** in their unfired position. In particular, the cartridge body **302** (shown in FIG. **18**) has been removed. The wedge sled **400** is shown at its proximal, unfired position with a pusher block **404** contacting the middle pin **46** (not shown in FIG. **23**) of the firing bar **14**. The wedge sled **400** is in longitudinal sliding contact upon the cartridge tray **224** and includes wedges sled cams **410**, **420** that force upward the double drivers **330***a*, **330***b* and the single drivers **370***b*, **370***b* as the wedge sled **400** moves distally. Staples **222** (not shown in FIG. **23**) resting upon the drivers **330***a*, **330***b*, **370***a*, **370***b* are thus also forced upward into contact with the anvil forming pockets **202** in anvil **18** to form closed staples. Also depicted is the channel slot **45** in the elongate channel **16** that is aligned with the elongated slot **310** in the staple cartridge **300**.

FIG. **24** depicts the end effector **12**, which is in an open position by a retracted closure sleeve **32**, with a staple cartridge **300** installed in the elongate channel **16**. The firing bar **14** is at its proximal position, with the upper pin **38** aligned in a non-interfering fashion with the anvil pocket **40**. The anvil pocket **40** is shown as communicating with the longitudinal anvil slot **42** in the anvil **18**. The distally presented cutting edge **48** of the firing bar **14** is aligned with and proximally from removed from the vertical slot **49** in the staple cartridge **300**, thereby allowing removal of a spent cartridge and insertion of an unfired cartridge, which may be "snapfit" into the elongate channel **16**. Specifically, in this embodiment, extension features **316**, **318** of the staple cartridge **300** engage recesses **212**, **214**, respectively (shown in FIG. **23**) of the elongate channel **16**.

FIG. **25** depicts the end effector **12** of FIG. **23** with all of the staple cartridge **300** removed to show the middle pin **46** of the firing bar **14** as well as portion of the elongate channel **16** removed adjacent to the channel slot **45** to expose the firing bar cap **44**. In addition, portions of the shaft **23** are removed to expose a proximal portion of the firing bar **14**. Projecting downward from the anvil **18** near the pivot is a pair of opposing tissue stops **244** which serve to prevent tissue from being positioned too far up into the end effector **12** during clamping.

FIG. **26** depicts the end effector **12** in a closed position with the firing bar **14** in an unfired position. The upper pin **38** is in the anvil pocket **40** and is vertically aligned with the anvil slot **42** for distal longitudinal movement of the firing bar **14** during firing. The middle pin **46** is positioned to push the wedge sled **400** distally so that the sled cams **410**, **420**

contact and lift double drivers **330***a*, **330***b* and the single drivers **370***a*, **370***b*, respectively, to drive them upwardly toward the anvil **18**.

As can be appreciated from reference to FIGS. **14**A, **15**A and **19**A, in one embodiment of the present invention, the distance between the bottom of the first staple-receiving grooves **345**, **347** forming the first staple cradle **349** and the apex **203'** of forming surfaces **203** of the corresponding forming pocket **202** of anvil **18**, when the anvil **18** is in the closed position and when the inside driver **330***a*, **330***b* is supported on the cartridge tray **224**, is referred to herein as the first staple forming distance "A". The distance between the bottom of the secondary staple-receiving grooves **345**, **347** forming the secondary staple cradle **349** and the apex **203'** of the forming surface **203** of the corresponding forming pocket **202** in the anvil **18** when the anvil **18** is in the closed position and the inside driver **330***a*, **330***b* is supported on the cartridge tray **224** is referred to herein as the secondary staple forming distance "B". In one embodiment, the first staple forming distance "A" and the secondary staple forming distance "B" are substantially equal to each other. In other embodiments, those distances "A" and "B" may differ from each other.

As illustrated in FIGS. **16**A and **19**A the distance between the bottom of the second staple-receiving grooves **376**, **378** that form the second staple cradle **379** and the apex **203'** of the forming surface **203** of a corresponding forming pocket **202** in anvil **18** when the anvil **18** is in the closed position and the outside drivers **370***a*, **370***b* are supported on the cartridge channel **224**, is referred to herein as a "second" staple forming distance "C". FIGS. **27** and **28** illustrate the forming of staples supported on some of the first outside drivers **370***a*. In FIG. **27**, one of the outside sled cams **420** of the wedge sled **400** is initially contacting one of the outside drivers **370***a*. As the wedge sled **400** continues in the driving direction represented by arrow "K" in FIG. **28**, the outside sled cam **420** causes the outside drivers **370***a* drive the staples **222** supported thereby into the staple forming pockets **202** in the anvil **18**. Likewise, as the wedge sled **400** is driven in the driving direction "K", the inside sled cams **410** contact the inside drivers **330***a*, **330***b* and causes them to drive the staples **222** supported thereby into the corresponding staple forming pockets **202** in the anvil **18**.

As indicated above, in some applications involving an area of varied tissue composition, it can be desirable to form rows of staples wherein the formed (final) heights of the staples in a row that is the farthest distance away from the cut line are greater than the formed (final) heights of those staples in the row that is closest to the cut line. In other applications, it may be desirable for the formed heights of the staples in a single row to increase (or decrease) from staple to staple. Another clinical benefit would be to have the formed heights of the staples in the outermost rows larger than formed heights of the staples in the inside rows. The various embodiments of the subject invention can provide these results while employing identical staples in all of the rows.

As the present Detailed Description proceeds, those staples **222** in the outermost rows **520**, **530** of staples (those staples formed using the outside staple drivers **370***a*, **370***b*) will be referred to hereinafter as staples **222'** and those staples in the innermost rows **522**, **524**, **526**, **528** of staples (those staples formed using the inside staple drivers **330***a*, **330***b*) will be referred to hereinafter as staples **222"**. It will be understood, however, that staples **222'** and **222"** are identical to each other prior to being formed by the various embodiments of the present invention. That is, staples **222'** and **222"** each have identical prong lengths "P" and widths "W". Returning to FIGS. **14**A-**16**A and **21** and **22**, the above desired effects may be attained by altering the staple forming distances "A", "B", and "C" relative to each other and/or the sled cam heights "H" and "J". In one embodiment of the subject invention, for example, the height "H" of each of the inside sled cams **410** is substantially equal to the sled height "J" of each of the outside sled cams **420**. See FIGS. **21** and **22**. In this embodiment, the staple forming distances "A" and "B" are substantially equal to each other, but distances "A" and "B" are less than the staple forming distance "C". The distance "D" between the bottoms of the first staple-receiving grooves **345**, **347** and the bottom surface **342'** of the primary driver base **342** is substantially equal to the distance "E" between the bottoms of the secondary staple-receiving grooves **356**, **357** and the bottom surface **352'** of the secondary driver base portion **352**. See FIG. **15**. Also in this embodiment, the distance "F" between the bottoms of the second staple-receiving grooves **376** and **378** and the bottom surface **373** of the third base **372** of the outside drivers **370***a*, **370***b* (FIG. **16**) is less than distances "D" and "E" (FIG. **15**). Because the forming distance "C" is greater than the forming distances "A" and "B", the staples **222** supported and formed by the outside drivers **370***a*, **370***b* are not compressed as much as the staples supported and formed by the inside drivers **330***a*, **330***b*. It will be understood that similar results may be attained on the opposite side of the elongated slot **310** and the cut line **600** formed in the tissue by using the same arrangements and sizes of inside drivers **330***b* and outside drivers **370***b*. In an alternative embodiment, the same effect may be achieved by altering the depths of the forming pockets **202** corresponding to the drivers **330***a* and **370***b* such that forming distance "C" is greater than the forming distances "A" and "B". That is, the depth (distance "Z" in FIG. **16**A) of the forming pockets **202** corresponding to the outside drivers **370***a*. **370***b* may be greater than the depth (distance "Z" in FIG. **14**A) of the forming pockets **202** that correspond to the inside drivers **330***a*, **330***b*.

FIG. **29** illustrates the rows of staples formed on each side of a cut line **600** utilizing this embodiment of the present invention wherein the forming distances "A" and "B" are equal to each other and the forming distance "C" is greater than the forming distances "A" and "B". For example, if forming distance "C" is 0.020" greater than forming distances "A" and "B", the formed height of the outside staples **222'** (represented as dimension "L" in FIG. **30**) in rows **520** and **530** would be 0.020 inches is greater than the formed height of the inside staples **222"** (represented as dimension "M" in FIG. **31**) in rows **522**, **524**, **526**, **528**.

The same result may be achieved by utilizing another embodiment of the present invention wherein the forming distances "A", "B" and "C" are essentially equal. In this embodiment, however, the height of each of the inside sled cams **410** (distance "H" in FIG. **21**) is greater than the height of each of the outside sled cams **420** (distance "J" in FIG. **22**). Thus, because the height "H" of the inside sled cams **410** is greater than the height "J'" of the outside sled cams **420**, the inside sled cams **410** will drive the corresponding inside drivers **330***a*, **330***b* further towards the anvil than the outside sled cams **420** will drive the corresponding outside drivers **370***a*, **370***b*. Such driving action will cause the staples supported by the inside drivers **330***a*, **330***b* to be compressed to a greater extent than those staples supported by the outside drivers **370***a*, **370***b*. For example, if distance "H" is 0.020 inches greater than distance "J", the formed

height of staples **222'** in lines **520**, **530** would be 0.020" greater than the formed height of staples **222"** in lines **522**, **524**, **526**, **528**.

When employing yet another embodiment of the present invention, the outside rows **520**, **530** of staples **222'** and the inside rows **522**, **528** of staples **222"** may be formed with heights that are greater than the formed heights of the staples **222"** in the inside rows **524**, **526**. See FIG. **32**. This result is achieved by making the forming distances "C" greater than the forming distance "A" and making forming distance "A" greater than secondary forming distance "B".

Another embodiment of the present invention can be used to install staples where it is desirable for the formed heights of staples in a single row to vary. One such arrangement is depicted in FIG. **33**. As can be seen in FIG. **33**, the formed heights of the staples **222'** in the outside rows **520**, **530** increase when moving from the proximal ends **521**, **531** of each row **520**, **530**, respectively to the distal ends **523**, **533** of each row **520**, **530**, respectively. This effect may be accomplished by decreasing the forming distance "C" for each succeeding driver **370***a*, **370***b*. That is, the driver **370***a* closest the proximal end of the cartridge **300** would be sized to establish a forming distance "C" that is greater than the forming distance "C" achieved by the adjacent driver **370***a* and so on to achieve a condition wherein each succeeding staple **222'** (moving in the direction from the proximal end to the distal end of the cartridge **300**) would have larger formed heights. This result could also be attained in the staples **222"** in rows **522**, **524**, **526**, **528** by similarly altering the forming distances "A" and/or "B" attained by each driver **330***a*, **330***b*. Likewise, formed heights of the staples **222'** in the outside rows **520**, **530** could be made to decrease when moving from the proximal ends **521**, **531** of each row **520**, **530**, respectively, to the distal ends **523**, **533** of each row **520**, **530**, respectively. This result may be attained by increasing the forming distance of each succeeding driver **370***a*, **370***b*. That is, the driver **370***a* closest the proximal end of the cartridge **300** would have a forming distance "C" that is less than the forming distance "C" of the adjacent driver **370***a* and so on to achieve a condition wherein each succeeding staple **222'** (moving in the direction from the proximal end to the distal end of the cartridge) would have smaller formed heights. See FIG. **34**.

In use, the surgical stapling and severing instrument **10** is used as depicted in FIGS. **1-2** and **35-41**. In FIGS. **1-2**, the instrument **10** is in its start position, having had an unfired, fully loaded staple cartridge **300** snap-fitted into the distal end of the elongate channel **16**. Both triggers **26**, **28** are forward and the end effector **12** is open, such as would be typical after inserting the end effector **12** through a trocar or other opening into a body cavity. The instrument **10** is then manipulated by the clinician such that tissue **248** to be stapled and severed is positioned between the staple cartridge **300** and the anvil **18**, as depicted in FIG. **35**. With reference to FIGS. **36** and **37**, the clinician then moves the closure trigger **26** proximally until positioned directly adjacent to the pistol grip **24**, locking the handle portion **20** into the closed and clamped position. The retracted firing bar **14** in the end effector **12** does not impede the selective opening and closing of the end effector **12**, but rather resides within the anvil pocket **40**. With the anvil **18** closed and clamped, the E-beam firing bar **14** is aligned for firing through the end effector **12**. In particular, the upper pin **38** is aligned with the anvil slot **42** and the elongate channel **16** is affirmatively engaged about the channel slot **45** by the middle pin **46** and the firing bar cap **44**.

With reference to FIGS. **38** and **39**, after tissue clamping has occurred, the clinician moves the firing trigger **28** proximally causing the firing bar **14** to move distally into the end effector **12**. In particular, the middle pin **46** enters the staple cartridge **300** through the firing drive slot **47** to effect the firing of the staples **222** (not shown in FIGS. **38** and **39**) via wedge sled **400** toward the anvil **18**. The lowermost pin, or firing bar cap **44**, cooperates with the middle pin **46** to slidingly position cutting edge **48** of the firing bar **14** to sever tissue. The two pins **44**, **46** also position the upper pin **38** of the firing bar **14** within longitudinal anvil slot **42** of the anvil **18**, affirmatively maintaining the spacing between the anvil **18** and the elongate channel **16** throughout its distal firing movement.

With reference to FIGS. **40** and **41**, the clinician continues moving the firing trigger **28** until brought proximal to the closure trigger **26** and pistol grip **24**. Thereby, all of the ends of the staples **222** are bent over as a result of their engagement with the anvil **18**. The firing bar cap **44** is arrested against a firing bar stop **250** projecting toward the distal end of the channel slot **45**. The cutting edge **48** has traversed completely through the tissue. The process is complete by releasing the firing trigger **28** and by then depressing the release button **30** while simultaneously squeezing the closure trigger **26** to open the end effector **12**.

In various embodiments, as outlined above, a staple cartridge can include a first row of staples which can be deformed to a first height and, in addition, a second row of staples which can be deformed to a second height, wherein the first height can be shorter than the second height. As a result, the staples within the first row can apply a larger clamping force to soft tissue captured therein as compared to the clamping force applied by the staples within the second row. Such embodiments can be utilized to apply a larger clamping force along the perimeter of incised tissue, for example, in order to reduce bleeding therefrom while providing a smaller clamping force to the tissue in an adjacent row, or rows, of staples. In various embodiments, such adjacent rows of staples can provide additional support to the soft tissue without unnecessarily stiffening the soft tissue or constricting the flow of blood therein.

In at least one embodiment, referring to FIG. **48**, each of the staples within a first, or inner, staple row can be deformed to a height within a first height range and each of the staples within a second, or middle, staple row can be deformed to a height within a second height range, wherein the first height range can be different than the second height range. In various embodiments, the first height range and the second height range can be mutually exclusive or, in at least one embodiment, there can be some overlap between the two ranges. In at least one embodiment, the staples within the first row can be deformed to a first average height and the staples within the second row can be deformed to a second average height, wherein the first average height can be different than the second average height. Similar to the above, each of the staples within a third row of staples can be deformed to a height within a third height range which is different than the first height range and the second height range in order to apply different clamping forces to the soft tissue.

Oftentimes, further to the above, a larger clamping force can generate a larger clamping pressure within the soft tissue captured by a staple. More particularly, in at least one embodiment, a clamping force can be proportional to the product of the pressure that it applies and the area across which it is applied. As a result, a staple which is deformed to a shorter staple height can create a larger clamping

pressure within the soft tissue as compared to a staple which is deformed to a larger staple height, assuming that the area across which the clamping forces are applied is the same. In view of the above, a surgical staple can include tissue-contacting areas configured to increase and/or decrease the clamping pressure applied by a given clamping force.

In various embodiments, referring to FIG. **42**, a staple **622** can include crown **624** and deformable members, or legs, **630** and **634** which can extend from crown **624**. In at least one embodiment, crown **624** can include tissue-contacting surfaces **625** which can be configured to support soft tissue, for example, thereon when deformable members **630** and **634** are deformed to capture the soft tissue within staple **622**. As compared to portion **223** of staple **222** (FIG. **12**), surfaces **625** can provide a larger surface area to support soft tissue and, as a result, reduce the pressure applied to the soft tissue by the deformed staple legs. Further to the above, in various embodiments, crowns **624** and/or tissue-contacting surfaces **625**, for example, can define a width which is wider than the width of the deformable members. Referring to FIG. **48**, for example, crowns **624**, and/or tissue-contacting surfaces thereon, can be defined by a width "W2" which is wider than a width "W1" defined by the cross-section of deformable members **630**, for example. In various embodiments, the width of crowns **624** and/or surfaces **625** can be selected such that a desired clamping pressure is applied to the tissue captured within the staples. For example, a crown **624** or surface **625** can be selected such that it is only slightly wider than one of the deformable members wherein, in such embodiments, less surface area is available to support the tissue which can increase the clamping pressure within the tissue as compared to the surface area provided by the crowns **624** or surfaces **625** illustrated in FIGS. **46** and **47** which are much wider than the deformable members. In at least one embodiment, although not illustrated, the staples within a first row can include crowns having a first width and the staples within a second row can include crowns having a different, or second, width such that the first row of staples can apply a first clamping pressure to the soft tissue while the second row of staples can apply a different, or second, clamping pressure.

In various embodiments, deformable members **630** and **634** of staple **622**, for example, can be comprised of separate deformable wires or, alternatively, deformable members **630** and **634** can comprise a single contiguous wire extending through at least a portion of crown **624**. In at least one embodiment, the deformable members can be comprised of one or more metals, or any other suitable deformable material, such as titanium, for example. In any event, crown **624** can be overmolded onto, or otherwise suitably attached to, at least a portion of deformable members **630** and **634** in order to form tissue-contacting surfaces **625**. In various embodiments, referring to FIG. **43**, a staple cartridge can include an inner row of staples **622** which can be deformed to a first height (represented by dimension "M"), a middle row of staples **622** which can be deformed to a second height (represented by dimension "M'"), and an outer row of staples **622** which can be deformed to a third height (represented by dimension "L"). Similar to the above, a staple cartridge can include various staple drivers, for example, for driving staples **622** against an anvil, for example, to deform the staples to such various heights.

In various embodiments, referring to FIG. **47**, a staple cartridge **600** can include staple drivers **670***a* and **670***b*, for example, which can be configured to deploy staples **622** from staple cartridge **600**. In at least one embodiment, similar to the above, staple driver **670***b* can include a first, or inner, cradle **626** for supporting a first, or inner, staple **622** a distance "A" from datum **603**, a second, or middle, cradle **627** for supporting a second, or middle, staple **622** a distance "B" from datum **603**, and a third, or outer, cradle **628** for supporting a third, or outer, staple **622** a distance "C". Datum **603** can represent a forming surface of an anvil against which the staples can be deformed although, in various embodiments, an anvil can include various forming surfaces which may not lie along a single datum. In any event, referring to FIG. **48**, the inner staple **622** can be deformed to a staple height represented by dimension M, the middle staple **622** can be deformed to a staple height represented by dimension M', and the outer staple **622** can be deformed to a staple height represented by dimension L. In such embodiments, the inner staple **622** can be part of a first row of staples which apply a first, or larger, clamping force to tissue "T", the middle staple **622** can be part of a second row of staples which apply a second, or intermediate, clamping force to tissue T, and the outer staple **622** can be part of a third row of staples which apply a third, or smaller, clamping force to tissue T.

In various other embodiments, referring to FIG. **46**, a staple cartridge **600'** can include staple drivers **670***a'* and **670***b'* which can, similar to the above, be configured to deploy staples **622** from staple cartridge **600**. In at least one embodiment, staple driver **670***b'* can include a first, or inner, cradle **626'** for supporting a first, or inner, staple **622** a distance A' from datum **603**, a second, or middle, cradle **627'** for supporting a second, or middle, staple **622** a distance B' from datum **603**, and a third, or outer, cradle **628'** for supporting a third, or outer, staple **622** a distance C' from datum **603**, where C' can be shorter than B', and where B' can be shorter than A'. In at least one such embodiment, the outer staple **622** can be deformed to a staple height which is shorter than the staple height to which the inner and middle staples are deformed.

In various embodiments, as illustrated in FIGS. **46** and **47**, staples **622** can have the same, or at least substantially the same, undeformed height "P". In other various embodiments, as illustrated in FIGS. **44** and **45**, a staple cartridge can include staples having different undeformed staple heights. In at least one embodiment, referring to FIG. **44**, staple cartridge **600"**, for example, can include inner staple **622***a* supported a distance A" away from datum **603**, middle staple **622***b* supported a distance B" away from datum **603**, and outer staple **622***c* supported a distance C" away from datum **603**, where inner staple **622***a* can be taller than staples **622***b* and **622***c* when measured in their undeformed configurations. In various embodiments, the undeformed heights of the staples and the distances in which the staples are displaced can be calculated to provide a suitable arrangement of deformed staple heights within the targeted soft tissue. Similar to the above, in at least one embodiment and referring to FIG. **45**, staple cartridge **600'''**, for example, can include inner staple **622***d* supported a distance A''' away from datum **603**, middle staple **622***e* supported a distance B''' away from datum **603**, and outer staple **622***f* supported a distance C''' away from datum **603**, where inner staple **622***d* can be shorter than staples **622***e* and **622***f*, and where middle staple **622***e* can be shorter than staple **622***f* when measured in their undeformed configurations.

As outlined above, a staple can be configured to apply a clamping force and pressure to soft tissue captured therein. In various circumstances, it may be desirable to maintain such a clamping force and pressure for a prolonged period of time. In other circumstances, it may be desirable for the clamping force and/or pressure to increase and/or decrease

during the healing process. In various embodiments, various portions of a staple, such as the crown and/or deformable members, for example, can be coated in a material which can expand and increase the clamping force and/or pressure to the soft tissue after the staple has been deployed into the tissue. In at least one embodiment, various portions of a staple can be comprised of a dissolvable, bioabsorbable, or biofragmentable material which, as the material breaks down, can slowly relieve the clamping force and/or pressure applied to the soft tissue. Such embodiments are described in greater detail below.

In various embodiments, referring to FIG. **49**, a surgical staple **722** can include a first deformable member **730** including first leg **731** and second leg **732** and, in addition, a second deformable member **734** including first leg **735** and second leg **736**. In at least one embodiment, staple **722** can further include dissolvable crown **724** which can be configured to hold deformable members **730** and **734** relative to each other and, after crown **724** has been dissolved, permit deformable members **730** and **734** to move relative to each other. Similar to the above, referring to FIGS. **50** and **51**, a surgical staple **722'** can include a first deformable member **730'**, a second deformable member **734'**, and a crown **724'** which can connect the deformable members before it is dissolved. In various embodiments, each deformable member can include a base **723'** which can connect the first and second legs of the deformable member where, in at least one embodiment, the bases **723'** of the deformable members can be embedded in a material which is overmolded thereon. In various embodiments, as outlined above, the material can include a dissolvable, bioabsorbable, or biofragmentable material such as Vicryl and/or PDS from Ethicon, Inc., for example. As used herein, the terms dissolvable, bioabsorbable, and biofragmentable all generally refer to materials that can be at least partially assimilated by the body after being implanted into a patient, for example.

In use, staple **722'**, for example, can be inserted into soft tissue via a stapler and can be deformed into the configuration illustrated in FIG. **52**. More particularly, in at least the illustrated embodiment, deformable members **730'** and **734'** can be deformed by the anvil of the stapler such that ends **733'** of legs **731'** and **735'** are brought into close proximity to crown **724'**, for example. Once staple **722'** is implanted into the tissue, crown **724'** may begin to break down, dissolve, and weaken. More particularly, referring to FIG. **53**, the bioabsorbable material of crown **724'** may deteriorate to the point where first member **730'** and second deformable member **734'** become disconnected from each other. Once first member **730'** and second member **734'** have become disconnected, they can move relative to one another as illustrated in FIG. **54**. The time required for crown **724'** to sufficiently dissolve may depend on the material used and/or the size of crown **724'**. Polyglatin 910 material, sold under the tradename Vicryl, for example, may dissolve in 7-14 days.

In various embodiments, a dissolvable crown may provide several therapeutic advantages. For example, when staple **722'** is initially deployed, deformable members **730'** and **734'** may significantly compress the tissue within the staple against crown **724'**. In some applications, this compression may be desirable to limit bleeding from the tissue. As crown **724'** deteriorates, the gap between the deformed members **730'** and **734'** and crown **724'** may increase thereby relaxing the compressive forces acting on the tissue. In some applications, relaxing the compression forces during the healing process may allow the tissue to slowly expand and return to its normal thickness over a period of time. In some embodiments, crown **724'** can be coated with a hydrophilic material that initially expands to compress the tissue captured within the staple before dissolving away thereafter. In these embodiments, the hydrophilic material can expand by absorbing water from the surrounding tissue and fluids. In addition to the above, staple **722'**, when it is inserted into the tissue, may be very stiff and, if several staples are inserted into the tissue, the tissue may not be permitted to move and expand during the healing process. However, after crowns **724'** of staples **722'** have dissolved, the deformable members of the staples may be able to move relative to each other while still holding the underlying tissue together.

In various embodiments, the deformable members of a staple may be comprised of a substantially non-dissolvable or non-bioabsorbable material. In other embodiments, at least one of the deformable members may be comprised of a dissolvable, bioabsorbable, or biofragmentable material such as magnesium or iron, for example. In at least one embodiment, the iron is pure iron. In either event, the dissolvable material of the deformable members **730'** and **734'**, for example, can be selected such that they dissolve at the same rate as, slower than, or faster than the dissolvable material of crown **724'**, for example. In at least one example, the material of crown **724'** can be selected such that it completely dissolves away while deformable members **730'** and **734'** are still holding tissue together. In other various embodiments, the material of first deformable member **730'** can be selected such that it dissolves faster than the material of second deformable member **734'**. Accordingly, the deformable members of these embodiments may allow for a staggered release of the tissue. In other various embodiments, at least two adjacent staples can be connected by a bridge before and/or after the staples have been deployed into the tissue. In these embodiments, the bridge connecting the staples can be comprised of materials that dissolve away at the same rate, and/or a different rate, than the first and second staples. In these embodiments, the bridges can dissolve away before the first staples and/or the second staples allowing for a staggered release of the tissue.

In various embodiments, the staples described above can be used to approximate tissue, i.e., the staples can secure resected or damaged tissue such that the strength of the resected or damaged tissue approximates that of healthy tissue. To this end, a method of approximating tissue can include suturing tissue with a surgical staple comprised of a dissolvable material and a non-dissolvable material to approximate tissue in a first state, and dissolving the dissolvable material to cause the remaining non-dissolvable material to approximate the tissue in a second state. In at least one embodiment, the tissue approximation in the second state is more flexible than in the first state.

In addition to the above, a crown may be comprised of at least two overmolded or co-molded materials. More particularly, referring to FIG. **55**, crown **724"** of staple **722"** may be comprised of a first material **740"** overmolded onto at least a portion of deformable members **730"** and **734"** and a second material **742"** overmolded onto first material **740"**, for example. In such an embodiment, second material **742"** can be configured to dissolve away quickly thereby allowing deformable members **730"** and **734"** to separate from each other early on in the healing process. However, in at least one embodiment, first material **740"** can be selected to dissolve at a slower rate than second material **742"** in order for crown **724"** to continue to provide a compressive force on the tissue even after second material **742"** has completely dissolved away. In at least one embodiment, first material **740"** can be injection molded onto deformable members

730" and 734" and then permitted to cure, and/or substantially solidify, before second material 742" is injection molded onto first material 740". In other various embodiments, first material 740" and second material 742" can be injection molded onto deformable members 730" and 734" at substantially the same time or in rapid succession. In these embodiments, the first and second materials can chemically bond together to provide sufficient strength therebetween so that the staple may be handled without the first and second materials separating from one another. In other embodiments, the first and second materials can form mechanically interlocking features to accomplish the same result.

In at least one embodiment, referring to the embodiment illustrated in FIG. 51, crown 724' may include reduced cross-section 737' intermediate portions 738' and 739'. In use, intermediate section 737', as it has a smaller cross-section than portions 738' and 739', may completely dissolve away before sections 738' and 739' thereby allowing first member 730' to become unconnected from second member 734' before the entirety of crown 724' has dissolved. In at least one embodiment, the cross-sections of sections 737', 738', and 739' can be selected such that deformable members 730' and 734' can become unconnected at a desired stage in the healing process. In at least one embodiment, referring to FIG. 56A, crown 734''' of staple 722''' can include score marks 743''' which reduce the thickness of crown 724''' in the scored areas. In these embodiments, the score marks may be formed when crowns 724''' are overmolded onto deformable members 730''' and 734''' or formed by a cutting tool thereafter. As a result of score marks 743''', crown 724''', as it dissolves, can break up into several small pieces which are, in some circumstances, more easily absorbable by the body. In at least one embodiment, referring to FIG. 56B, crown 724“ ” may include a plurality of pockets 744'''' intermediate raised portions 745''''. In use, the material intermediate raised portions 745" may dissolve away leaving behind a lattice, or grid, of raised portions 745'''' intermediate deformable members 730" and 734''''.

In at least one embodiment, a crown of a surgical staple can also comprised of at least one therapeutic drug. In these embodiments, as the dissolvable material deteriorates, the therapeutic drug can be absorbed by the surrounding tissue. In some embodiments, the drug is dispersed throughout the dissolvable material such that the drug is steadily released during the healing process. In other embodiments, however, the therapeutic drug may be unevenly dispersed throughout the dissolvable material, or layered within and/or on the material, to provide an increased dosage of the drug at a particular stage in the healing process.

In various embodiments, a crown overmolded or assembled onto various portions of a staple may act as an electrical insulator. In at least one embodiment, a staple having such a crown or insulator may reduce the possibility of arcing along a row of staples when an electrocautery device is used in situ, for example. In effect, the absorbable insulators, or crowns, on the staples can substantially prevent an electrical current from jumping between staples as the top of each staple may not be electrically conductive under normal operating conditions. As a result, the possibility of damaging tissue may be reduced.

In various circumstances, when one or more of the deformable members of a staple are inserted through soft tissue, for example, the deformable members can puncture the soft tissue creating holes therein. As a result, eventhough the deformable members can substantially fill the puncture holes, blood may flow, at least initially, from the soft tissue surrounding the puncture holes. In various embodiments of the present invention, as indicated above, at least a portion of the deformable members can expand and apply a compressive force against the soft tissue in order to stop, or at least reduce, bleeding from the soft tissue surrounding the puncture holes. In at least one embodiment, referring to FIGS. 81-87, at least a portion of first and second deformable members 1130 and 1134 can be coated with expandable coating 1199. In various embodiments, referring to FIG. 82, expandable coating 1199 can have a first diameter when it is initially inserted into the soft tissue and can apply, depending upon the size of the deformable members and the puncture holes, a first compressive force to the soft tissue surrounding the deformable members. Thereafter, referring to FIG. 86, expandable coating 1199 can increase in size to apply a larger, or second, compressive force to the soft tissue surrounding the deformable members. In various embodiments, this second compressive force may be sufficient to close, or at least constrict, the blood vessels in the soft tissue surrounding the puncture hole to eliminate, or at least reduce, the flow of blood therethrough.

In various embodiments, expandable coating 1199 can be comprised of a hydrophilic material, or any other suitable material which has an affinity for water, that can absorb blood, or other fluids in the surgical site, in order to expand as described above. In at least one embodiment, a fluid can be introduced into the surgical site which can cause expandable coating 1199 to expand. In various embodiments, expandable coating 1199 can be comprised of a cross-linked ester compound having a polyethylene glycol base polymer, for example. In at least one such embodiment, expandable coating 1199 can be overmolded onto at least a portion of staple 1122 using an injection molding process. In various embodiments, the deformable members and/or crown, such as crown 1124, for example, can be entirely, or at least partially, comprised of an expandable material. In at least one such embodiment, the deformable members and/or crown can expand to compress the tissue captured within the deformable members after they have been deformed. In either event, after expandable material 1199 has expanded, at least a portion thereof can begin to dissolve and can be absorbed by the patient's body. In such embodiments, the second compressive force applied to the soft tissue can be relaxed and the soft tissue can be permitted to expand and grow in order to fill the puncture holes, for example. Such embodiments can be particularly useful when the deformable members and/or crown are also comprised of dissolvable or bioabsorbable materials as described above. In various embodiments, the expandable coating can also comprise a therapeutic agent, for example, which can be released as expandable coating 1199 is dissolved, for example. Further embodiments are disclosed in U.S. patent application Ser. No. 11/824,446, entitled SURGICAL STAPLE HAVING AN EXPANDABLE PORTION, which was filed on Jun. 29, 2007, now U.S. Patent Application Publication No. 2009/0001121, the entire disclosure of which is hereby incorporated by reference herein.

In various embodiments, referring to FIGS. 88-91, surgical staple 1222 can include crown 1224, first deformable member 1230, and second deformable member 1234 where deformable members 1230 and 1234 can extend from crown 1224. In at least one embodiment, at least a portion of first deformable member 1230 and/or second deformable member 1234 can have a non-circular cross-section. More particularly, referring to FIG. 88, the cross-section of deformable member 1234, for example, can include arcuate portion 1295 and flat portion 1297. In various embodiments, deformable members 1230 and/or 1234 can comprise a wire

having a cross-section which is substantially constant throughout the length of the wire or, in other embodiments, a wire having more than one cross-section. In at least one embodiment, although not illustrated, a first deformable member and a second deformable member can have different cross-sections. In at least one such embodiment, the first deformable member can include a substantially circular cross-section, for example, and the second deformable member can include a non-circular cross-section, for example. In other various embodiments, the first deformable member can include a non-circular cross-section which is different than a non-circular cross-section of the second deformable member.

In various embodiments, the cross-sectional geometry of deformable members **1230** and **1234**, for example, can control the manner and direction in which deformable members **1230** and **1234** are bent when they are deformed by an anvil as described above. In at least one embodiment, flat portions **1297** can be oriented such that they are facing each other and, as a result, flat portions **1297** can cause deformable members **1230** and **1234** to bend toward each other when a force is applied thereto. In other various embodiments, flat portions **1297**, for example, can be oriented in any suitable manner to allow the deformable members to bend in a desired direction. In effect, the size and location of flat portion **1297** can affect the moment of inertia of the cross-section of the deformable members and, correspondingly, affect the manner in which the deformable members respond to the bending stress applied thereto. In at least one embodiment, the deformation of the deformable members can be controlled in order to apply a desired compressive force to the soft tissue captured within the staple. More particularly, in at least one embodiment, deformable members **1230** and **1234** can be bent until they contact the soft tissue and apply a compressive force to the soft tissue where the amount of force applied is largely determined by the amount and direction in which deformable members **1230** and **1234** are deformed and, in addition, the geometry of the portion of the deformable members which is in contact with the soft tissue. For example, a flat portion of a deformable member can be configured to apply a lower clamping pressure to soft tissue than a round portion as a flat portion may provide more contact area across which the clamping force can be applied. In further various embodiments, the cross-sections of deformable members can include any suitable combination of flat, arcuate, and/or radiused surfaces including those disclosed in U.S. patent application Ser. No. 11/824,299, entitled SURGICAL STAPLE HAVING A DEFORMABLE MEMBER WITH A NON-CIRCULAR CROSS-SECTIONAL GEOMETRY, which was filed on Jun. 29, 2007, now U.S. Patent Application Publication No. 2008/0082125, the entire disclosure of which is hereby incorporated by reference herein.

In various embodiments, referrring to FIGS. **57-65**, staple **822** can include base **823**, first deformable member **830**, and second deformable member **834** where, in at least one embodiment, staple **822** can further include crown **824** having apertures **846** defined therein which can be configured to receive the first and second deformable members. As described in further detail below, deformable members **830** and **834** can be configured to move, or slide, within apertures **846** such that base **823** can be moved relative to crown **824**. In at least one such embodiment, each aperture **846** can define an axis **847** extending therethrough where the deformable members can be configured to move along axes **847** when they are moved within apertures **846**. In various embodiments, crown **824**, referring to FIG. **60**, can include recess **848** which can be configured to receive base **823** and at least limit, if not prevent, relative movement between base **823** and crown **824**. In at least one embodiment, base **823** can be movably positioned within recess **848** such that recess **848** can permit deformable members **830** and **834** to move along axes **847** but at least inhibit base **823** from moving transversely to axes **847**. In various embodiments, recess **848** can be configured to receive base **823** in a press-fit and/or snap-fit configuration such that, once base **823** is positioned in recess **848**, base **823** can be substantially immovable relative to crown **824**.

In various embodiments, referring to FIGS. **66-69**, staples **822** can be removably stored within a staple cartridge, such as staple cartridge **800**, for example. In at least one embodiment, staple cartridge **800** can include body **801** having cavities **802** defined therein. Staple cartridge body **801** can further include deck **803** having top surface **804** where cavities **802** can include an opening in top surface **804**. In various embodiments, each cavity **802** can be configured to receive at least a portion of a staple **822** where deck **823** can include recesses **805** which can be configured to removably receive crowns **824**. In use, referring to FIG. **66**, base **823** can be situated in a first position in cavity **802** before it is moved toward crown **824**. In at least one embodiment, deformable members **830** and **834** can include ends **819** where, in this first position, ends **819** can be positioned within or proximal to apertures **846**. In such embodiments, as a result, when deformable members **830** and **834** are moved relative to crown **824** as described above, deformable members **830** and **834** can be pre-aligned with axes **847** and the possibility of deformable members **830** and **834** becoming misaligned with apertures **846** can be reduced.

In various embodiments, referring to FIGS. **67** and **68**, deformable members **830** and **834** and base **823** of staple **822** can be moved, or slid, relative to crown **824** by driver **850**. In at least one embodiment, as outlined above, staple cartridge **800** can further include a wedge sled configured to lift driver **850** and move base **823** toward crown **824**. Although the wedge sled is not illustrated in FIGS. **67** and **68**, exemplary sleds are described and illustrated in the present application and can include wedge sled **400** in FIG. **20**, for example. In various embodiments, referring to FIG. **67**, driver **850** can push or slide base **823** upwardly until base **823** contacts crown **824** and engages recess **848** as described above. Thereafter, referring to FIGS. **68** and **69**, base **823** and crown **824** can be forced upwardly by driver **850** such that crown **824** is removed from recess **805**. In various embodiments, crown **824**, for example, can be press-fit or snap-fit within recesses **805** such that driver **850** must apply a sufficient force to dislodge crown **824** from recess **805**. In other various embodiments, as described in greater detail below, crown **824**, for example, can be integrally molded with deck **803** such that driver **850** must apply a sufficient force to base **823** to break crown **824** away from staple cartridge body **801**.

In various embodiments, driver **850**, for example, can be configured to drive deformable members **830** and **834** against an anvil such that the deformable members are deformed by the anvil, as described above. As a result, also similar to the above, the deformable members can capture the soft tissue and compress it against crown **824**. In various embodiments, crown **824** may further include tissue-contacting surface **825** which can be used to control the compressive pressure applied to the soft tissue as outlined above. By way of example, when surface **825** includes a large area against which the soft tissue is compressed, the compressive pressure applied to the soft tissue can be much less than

when surface **825** includes a smaller area. In at least one embodiment, tissue-contacting surface **825** can have a first width and base **823** can have a second width. In at least one such embodiment, the first width of tissue-contacting surface **825** can be wider than the second width of base **823** such that tissue-contacting surface **825** comes into contact with tissue and not base **823**.

In various embodiments, tissue can be captured and compressed between staple cartridge **800** and the anvil before staples **822** are deployed into the soft tissue. In at least one embodiment, crowns **824** can be positioned within recesses **805** of staple cartridge body **801** such that surfaces **825** of crowns **824** can be aligned, or substantially flush, with top surface **804** of deck **803**. In at least one such embodiment, as a result, the compressive force, or pressure, applied to the soft tissue by deck **803** and crowns **824** can be substantially the same. In other various embodiments, crowns **824** can be positioned within recesses **805** such that surfaces **825** are positioned above top surface **804** of staple deck **803**. In such embodiments, the compressive force, or pressure, applied to the soft tissue by crowns **825** can be larger than the compressive force, or pressure, applied by deck **803**. In various embodiments, the relative distance between surfaces **825** and top surface **804** can be selected to provide a desired pre-deployment compression force, or pressure, to the soft tissue. In other various embodiments, surfaces **825** can be positioned below top surface **804** of deck **803** such that the compression force, or pressure, applied to the soft tissue by surfaces **825** is less than the compressive force, or pressure, applied by deck **803**.

In various embodiments, referring to FIGS. **58**, **61**, and **64**, staple **822'** can include deformable members **830'** and **834'** which may be configured to pierce crown **824'** in lieu of passing through apertures as described above with respect to staple **822**. In such embodiments, ends **819'** of the deformable members can be sharp enough to puncture crown **824'** and create holes therein which can allow deformable members **830'** and **834'** to move, or slide, relative thereto. In other various embodiments, referring to FIGS. **59**, **62**, and **65**, staple **822"** can include deformable members **830"** and **834"** which can be positioned outside the perimeter of crown **824"**. In at least one such embodiment, although not illustrated, crown **824"** can include recesses, or slots, which can be configured to slidably receive deformable members **830"** and **834"**. In any event, referring to FIGS. **70-73**, a staple, such as staple **822"**, for example, can include a slidable crown, such as slidable crown **824"**, which can be slid relative to deformable members **830'''** and **834'''** before, during, and/or after the deformable members are deformed by an anvil. In at least one embodiment, a staple **822'''**, or any other suitable staple described herein, can be deformed to a staple height designated by distance "L", for example, or a shorter staple height designated by distance "M" in order to achieve the advantages discussed herein.

As outlined above, a portion of a staple cartridge can be broken away from the body of the staple cartridge as a staple is deployed therefrom. In various embodiments, this portion can be configured to be positioned intermediate the base of the staple and soft tissue captured within the staple. In at least one embodiment, referring to FIGS. **74-76**, a surgical stapling system can include staple cartridge **900** having staple pads **924** integrally molded into deck **903** of staple cartridge **900**. Further to the above, staple cartridge **900** can include one or more score marks **951** and slots **952** surrounding staple pads **924** such that staple pads **924** can be easily separated from deck **903**. In at least one embodiment, referring to FIG. **76**, the stapling system can include drivers **950** having shears **953** which can be configured to press against staple pads **924** when bases **923** of staples **922** are brought in close proximity to staple saddles **948** of pads **924** and "punch-out" staple pads **924** from deck **903**. In at least one embodiment, after staple pads **924** have been punched out from deck **903**, the staple pads can be positioned intermediate bases **923** and the tissue captured within staples **922**. As a result, staple pads **924** can be configured to act as the crown of the staple or, in alternative embodiments, act as a buttressing member intermediate the staple and the tissue. In at least one embodiment, similar to the above, staple pads **924** can be comprised of a bioabsorbable material.

Similar to staple cartridges **600** and **800**, for example, staple cartridge **900** can be configured to deploy staples **922** such that they can be deformed to various staple heights utilizing various staple drivers and/or various staple leg lengths to provide a desired clamping force and/or pressure as described above. In various embodiments, referring to FIGS. **77-79**, other means can be utilized to provide a desired clamping force and/or pressure to soft tissue including, in at least one embodiment, a staple cartridge having one or more rows of staples stored therein which have different crown heights. More particularly, in at least one embodiment, a staple cartridge can include a first row of first staples **1022** which have a crown height of Y, a second row of staples **1022'** which have a crown height of Y1, and a third row of staples **1022"** which have a crown height of Y2. Owing to the different crown heights of the staples, the third staples **1022"**, for example, can be configured to apply a larger clamping force to soft tissue captured therein as compared to staples **1022** and **1022'**, assuming that deformable members **1030** and **1034** of the staples are deformed the same amount. Similarly, second staples **1022'** can be configured to apply a larger clamping force than first staples **1022**.

In various embodiments, further to the above, the distance between tissue-contacting surfaces **1025** of crown **1024** and tips **1019** of the deformable members of first staples **1022**, i.e., distance X, can be larger than the distances between the tissue-contacting surfaces **1025** and deformable member tips **1019** of staples **1022'** and **1022"**, i.e., distances X1 and X2, respectively. In such embodiments, when deformable members **1030** and **1034** of each of the staples are deformed the same distance, staple **1022** can define a larger area, or volume, for the soft tissue to reside therein as compared to staples **1022'** and **1022"**. Owing to the larger area, or volume, defined by staple **1022**, deformable members **1030** and **1034** may apply a lesser clamping force to the soft tissue as compared to staples **1022'** and **1022"** and, as a result, such staples can be selectively utilized to provide a desired therapeutic effect. In at least one such embodiment, each staple **1022**, **1022'**, and **1022"** can have the same overall undeformed stapled height represented by distance "Z", where the sum of the distances of X and Y, X1 and Y1, and X2 and Y2 can respectively equal, or at least substantially equal, Z. To achieve the above, crowns **1024**, **1024'**, and **1024"** can be overmolded onto at least portions of the deformable members of staples **1022**, **1022'**, and **1022"**, respectively, such the position of tissue-contacting surfaces **1025** with respect to tips **1019** can be controlled through an injection molding process.

In various embodiments, further to the above, a staple cartridge can include, among other things, a first row of first staples **1022**, a second row of staples **1022'**, and a wedge sled for deploying staples **1022** and **1022'** from the staple cartridge, for example. In at least one embodiment, the staple cartridge can further include at least one staple driver

which can be configured to cooperate with the wedge sled to deploy the staples. Similar to the above, in various embodiments, each staple driver can include a first cradle for supporting a first staple **1022** and a second cradle for supporting a second staple **1022'** wherein the first and second cradles can be positioned relative to an anvil forming surface such that they can define the same, or nearly the same, distance therebetween. In such embodiments, owing to the different crown heights of staples **1022** and **1022'** as outlined above, staples **1022** can apply a different clamping force than staples **1022'** eventhough they are driven the same, or at least substantially the same, staple-deforming distance by the staple drivers. Stated another way, the tissue-contacting surfaces **1025** of staples **1022'** can be positioned closer to the staple forming surface than the tissue-contacting surfaces **1025** of staples **1022** eventhough the bottom surfaces **1055** of staples **1022** and **1022'** are supported at substantially the same distance relative to the staple-forming surface.

In various alternative embodiments, further to the above, the staple drivers for deploying the various staples described herein can be integrally-formed with the crowns of the staples, for example. In at least one embodiment, such integrally-formed drivers can simplify the assembly of the staple cartridge and, in various circumstances, reduce the possibility of misalignment between the staple drivers and the staples. In various embodiments, the integrally-formed drivers can be at least partially comprised of a bio-absorbable material, for example, such that, when the staple drivers are deployed with the staples into the patient, the staple drivers can dissolve during the healing process.

As described above and illustrated herein, rows of staples can be arranged in a linear, or at least substantially linear, arrangement, and can be deployed by various surgical staplers including those disclosed in U.S. Pat. No. 5,697,543, entitled LINEAR STAPLER WITH IMPROVED FIRING STROKE, which issued on Dec. 16, 1997; U.S. Pat. No. 6,131,789, entitled SURGICAL STAPLER, which issued on Oct. 17, 2000; and U.S. Pat. No. 7,143,923, entitled SURGICAL STAPLING INSTRUMENT HAVING A FIRING LOCKOUT FOR AN UNCLOSED ANVIL, which issued on Dec. 5, 2006, the entire disclosures of which are hereby incorporated by reference herein, although the present invention is not so limited. In various embodiments, rows of staples can be arranged in arcuate, curved, and/or curvilinear arrangements to achieve the advantages and effects outlined herein and can be deployed by surgical staplers including those disclosed in U.S. patent application Ser. No. 11/652,165, entitled SURGICAL STAPLING DEVICE WITH A CURVED END EFFECTOR, which was filed on Jan. 11, 2007, now U.S. Pat. No. 8,540,128, the entire disclosure of which is hereby incorporated by reference herein. In at least one embodiment, referring to FIG. **80**, for example, a staple cartridge can be configured to deploy concentric, or at least substantially concentric, rows of staples including a first row of staples having a first deformed height represented by dimension "M" and, in addition, a second row of staples having a second deformed height represented by dimension "L". In various circumstances, such rows of staples can be deployed by surgical staplers including those disclosed in U.S. Pat. No. 5,271,544, entitled SURGICAL ANASTOMOSIS STAPLING INSTRUMENT, which issued on Dec. 21, 1993, the entire disclosure of which is hereby incorporated by reference herein.

Further to the above, the various staple cartridges disclosed herein can be disposable. In at least one embodiment, an expended staple cartridge, or an at least partially expended staple cartridge, can be removed from a surgical stapler and replaced with another staple cartridge. In other various embodiments, the staple cartridge may not be removable and/or replaceable during the ordinary use of the surgical instrument but, in some circumstances, may be replaceable while and/or after the surgical stapler is reconditioned as described in greater detail below. In various embodiments, the staple cartridge can be part of a disposable loading unit or end-effector which can further include a staple cartridge carrier, anvil, cutting member, and/or staple driver. In at least one such embodiment, the entire, or at least a portion of, the disposable loading unit or end-effector can be detachably connected to a surgical instrument and can be configured to be replaced.

The devices disclosed herein can be designed to be disposed of after a single use, or they can be designed to be used multiple times. In either case, however, the device can be reconditioned for reuse after at least one use. Reconditioning can include any combination of the steps of disassembly of the device, followed by cleaning or replacement of particular pieces, and subsequent reassembly. In particular, the device can be disassembled, and any number of the particular pieces or parts of the device can be selectively replaced or removed in any combination. Upon cleaning and/or replacement of particular parts, the device can be reassembled for subsequent use either at a reconditioning facility, or by a surgical team immediately prior to a surgical procedure. Those skilled in the art will appreciate that reconditioning of a device can utilize a variety of techniques for disassembly, cleaning/replacement, and reassembly. Use of such techniques, and the resulting reconditioned device, are all within the scope of the present application.

Preferably, the invention described herein will be processed before surgery. First, a new or used instrument is obtained and if necessary cleaned. The instrument can then be sterilized. In one sterilization technique, the instrument is placed in a closed and sealed container, such as a plastic or TYVEK bag. The container and instrument are then placed in a field of radiation that can penetrate the container, such as gamma radiation, x-rays, or high-energy electrons. The radiation kills bacteria on the instrument and in the container. The sterilized instrument can then be stored in the sterile container. The sealed container keeps the instrument sterile until it is opened in the medical facility.

While the present invention has been illustrated by description of several embodiments and while the illustrative embodiments have been described in considerable detail, it is not the intention of the applicant to restrict or in any way limit the scope of the appended claims to such detail. Additional advantages and modifications may readily appear to those skilled in the art. Furthermore, the present invention has been discussed in terms of endoscopic procedures and apparatus. However, use herein of terms such as "endoscopic" should not be construed to limit the present invention to a surgical stapling and severing instrument for use only in conjunction with an endoscopic tube (i.e., trocar). On the contrary, it is believed that the present invention may find use in any procedure where access is limited to a small incision, including but not limited to laparoscopic procedures, as well as open procedures. Moreover, the unique and novel aspects of the various staple cartridge embodiments of the present invention may find utility when used in connection with other forms of stapling apparatuses without departing from the spirit and scope of the present invention.

What is claimed is:

1. A stapling assembly, comprising:

an anvil comprising an asymmetric staple-forming pocket; and

a staple cartridge, comprising:

an annular row of staple cavities; and

a plurality of staples removably stored in said staple cavities, wherein each said staple comprises:

a crown, comprising:

a first side; and

a second side opposite said first side;

a first staple leg extending from said crown; and

a second staple leg extending from said crown, wherein said asymmetric staple-forming pocket is configured to form said staple by biasing said first staple leg outwardly toward said first side and said second staple leg outwardly toward said second side.

2. An end effector, comprising:

an anvil comprising an asymmetric staple-forming pocket; and

a staple cartridge comprising:

an annular row of staple cavities; and

a plurality of staples removably stored in said staple cavities, wherein each said staple comprises:

a crown, comprising:

a first side; and

a second side opposite said first side;

a first deformable member extending from said crown; and

a second deformable member extending from said crown, wherein said asymmetric staple-forming pocket is configured to deform said first deformable member outwardly toward said first side and said second deformable member outwardly toward said second side.

3. An end effector, comprising:

an anvil comprising a staple-forming pocket, wherein said staple-forming pocket comprises:

a first forming cup; and

a second forming cup;

a staple cartridge, comprising:

an annular row of staple cavities; and

a staple removably stored in one of said staple cavities, wherein said staple comprises:

a crown, comprising:

a first side; and

a second side opposite said first side;

a first deformable member extending from said crown; and

a second deformable member extending from said crown, wherein said first forming cup is configured to deform said first deformable member outwardly toward said first side, and wherein said second forming cup is configured to deform said second deformable member outwardly toward said second side.

* * * * *