US010486597B1

(12) **United States Patent**
Lynam

(10) **Patent No.: US 10,486,597 B1**
(45) **Date of Patent: *Nov. 26, 2019**

(54) **VEHICULAR VISION SYSTEM WITH REAR BACKUP VIDEO DISPLAY**

(71) Applicant: **MAGNA ELECTRONICS INC.**, Auburn Hills, MI (US)

(72) Inventor: **Niall R. Lynam**, Holland, MI (US)

(73) Assignee: **MAGNA ELECTRONICS INC.**, Auburn Rd., MI (US)

(*) Notice: Subject to any disclaimer, the term of this patent is extended or adjusted under 35 U.S.C. 154(b) by 0 days.

This patent is subject to a terminal disclaimer.

(21) Appl. No.: **16/458,392**

(22) Filed: **Jul. 1, 2019**

Related U.S. Application Data

(63) Continuation of application No. 16/203,965, filed on Nov. 29, 2018, now Pat. No. 10,336,255, which is a

(Continued)

(51) **Int. Cl.**
B60R 1/00 (2006.01)
H04N 5/225 (2006.01)

(Continued)

(52) **U.S. Cl.**
CPC ***B60R 1/00*** (2013.01); ***B60R 11/04*** (2013.01); ***B62D 15/0295*** (2013.01);

(Continued)

(58) **Field of Classification Search**
CPC B60R 1/00

(Continued)

(56) **References Cited**

U.S. PATENT DOCUMENTS

4,200,361 A 4/1980 Malvano et al.
4,214,266 A 7/1980 Myers

(Continued)

FOREIGN PATENT DOCUMENTS

DE 102007044535 A1 3/2009
EP 0353200 A2 1/1990

(Continued)

OTHER PUBLICATIONS

Achler et al., "Vehicle Wheel Detector using 2D Filter Banks," IEEE Intelligent Vehicles Symposium of Jun. 2004.

(Continued)

Primary Examiner — William C Vaughn, Jr.
Assistant Examiner — Daniel T Tekle
(74) *Attorney, Agent, or Firm* — Honigman LLP

(57) **ABSTRACT**

A vehicular vision system includes a rear backup camera and a display device including a video display screen. The rear backup camera is electrically powered no later than 200 milliseconds after a driver of the vehicle shifts the vehicle transmission into reverse gear to commence a backup event. A valid video signal is available from the rear backup camera no later than 500 milliseconds after electricity is provided to the camera. The vehicular vision system displays on the video display screen stable rear backup video images derived from captured image data no later than two seconds after the driver shifts the vehicle transmission into reverse gear. Commencing when the vehicle transmission was shifted into reverse gear to begin the backup event, only rear backup video images derived from image data captured by the rear backup camera are displayed on the video display screen for the duration of the backup event.

38 Claims, 17 Drawing Sheets

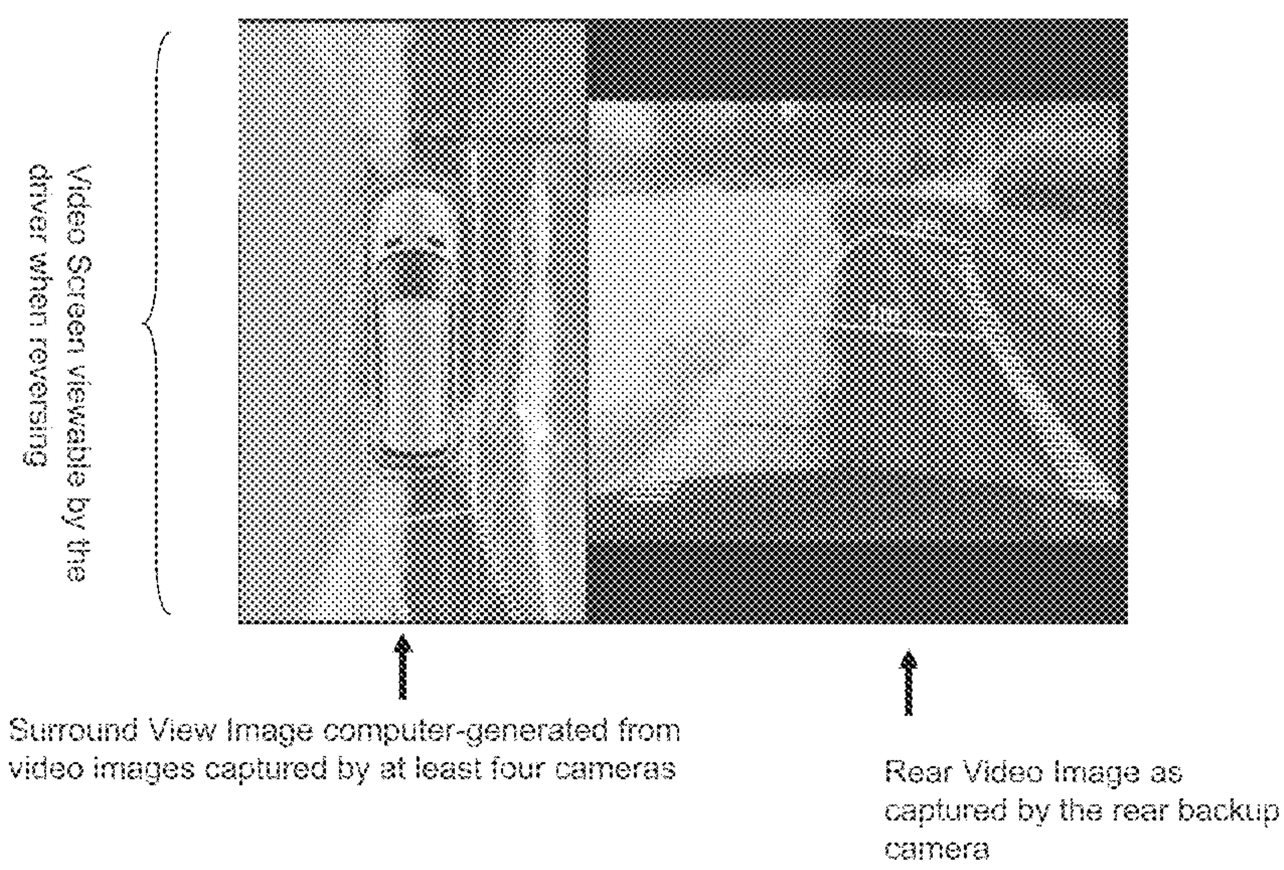

Related U.S. Application Data

continuation of application No. 15/675,920, filed on Aug. 14, 2017, now Pat. No. 10,144,352, which is a continuation of application No. 15/460,666, filed on Mar. 16, 2017, now Pat. No. 9,731,653, which is a continuation of application No. 15/295,057, filed on Oct. 17, 2016, now Pat. No. 9,598,014, which is a continuation of application No. 15/042,664, filed on Feb. 12, 2016, now Pat. No. 9,469,250, which is a continuation of application No. 13/333,337, filed on Dec. 21, 2011, now Pat. No. 9,264,672.

(60) Provisional application No. 61/466,138, filed on Mar. 22, 2011, provisional application No. 61/452,816, filed on Mar. 15, 2011, provisional application No. 61/426,328, filed on Dec. 22, 2010.

(51) **Int. Cl.**

H04N 5/232	(2006.01)
H04N 5/247	(2006.01)
B60R 11/04	(2006.01)
H04N 5/374	(2011.01)
H04N 7/18	(2006.01)
B62D 15/02	(2006.01)

(52) **U.S. Cl.**

CPC ***H04N 5/2251*** (2013.01); ***H04N 5/23238*** (2013.01); ***H04N 5/23293*** (2013.01); ***H04N 5/23296*** (2013.01); ***H04N 5/247*** (2013.01); ***H04N 5/374*** (2013.01); ***H04N 7/18*** (2013.01); ***H04N 7/181*** (2013.01); ***H04N 7/188*** (2013.01); *B60R 2300/20* (2013.01); *B60R 2300/607* (2013.01); *B60R 2300/70* (2013.01); *B60R 2300/802* (2013.01); *G06T 2210/22* (2013.01)

(58) **Field of Classification Search**

USPC 348/148

See application file for complete search history.

(56) **References Cited**

U.S. PATENT DOCUMENTS

4,218,698 A 8/1980 Bart et al.
4,236,099 A 11/1980 Rosenblum
4,247,870 A 1/1981 Gabel et al.
4,249,160 A 2/1981 Chilvers
4,254,931 A 3/1981 Aikens et al.
4,266,856 A 5/1981 Wainwright
4,277,804 A 7/1981 Robison
4,281,898 A 8/1981 Ochiai et al.
4,288,814 A 9/1981 Talley et al.
4,355,271 A 10/1982 Noack
4,357,558 A 11/1982 Massoni et al.
4,381,888 A 5/1983 Momiyama
4,420,238 A 12/1983 Felix
4,431,896 A 2/1984 Lodetti
4,443,057 A 4/1984 Bauer et al.
4,460,831 A 7/1984 Oettinger et al.
4,481,450 A 11/1984 Watanabe et al.
4,491,390 A 1/1985 Tong-Shen
4,512,637 A 4/1985 Ballmer
4,521,804 A 6/1985 Bendell
4,529,275 A 7/1985 Ballmer
4,529,873 A 7/1985 Ballmer et al.
4,532,550 A 7/1985 Bendell et al.
4,546,551 A 10/1985 Franks
4,549,208 A 10/1985 Kamejima et al.
4,571,082 A 2/1986 Downs
4,572,619 A 2/1986 Reininger et al.
4,580,875 A 4/1986 Bechtel et al.
4,600,913 A 7/1986 Caine
4,603,946 A 8/1986 Kato et al.
4,614,415 A 9/1986 Hyatt
4,620,141 A 10/1986 McCumber et al.
4,623,222 A 11/1986 Itoh et al.
4,626,850 A 12/1986 Chey
4,630,109 A 12/1986 Barton
4,632,509 A 12/1986 Ohmi et al.
4,638,287 A 1/1987 Umebayashi et al.
4,645,975 A 2/1987 Meitzler et al.
4,647,161 A 3/1987 Muller
4,653,316 A 3/1987 Fukuhara
4,669,825 A 6/1987 Itoh et al.
4,669,826 A 6/1987 Itoh et al.
4,671,615 A 6/1987 Fukada et al.
4,672,457 A 6/1987 Hyatt
4,676,601 A 6/1987 Itoh et al.
4,690,508 A 9/1987 Jacob
4,692,798 A 9/1987 Seko et al.
4,697,883 A 10/1987 Suzuki et al.
4,701,022 A 10/1987 Jacob
4,713,685 A 12/1987 Nishimura et al.
4,717,830 A 1/1988 Botts
4,727,290 A 2/1988 Smith et al.
4,731,669 A 3/1988 Hayashi et al.
4,741,603 A 5/1988 Miyagi et al.
4,758,883 A 7/1988 Kawahara et al.
4,772,942 A 9/1988 Tuck
4,789,904 A 12/1988 Peterson
4,793,690 A 12/1988 Gahan et al.
4,817,948 A 4/1989 Simonelli
4,825,232 A 4/1989 Howdle
4,838,650 A 6/1989 Stewart et al.
4,847,772 A 7/1989 Michalopoulos et al.
4,855,822 A 8/1989 Narendra et al.
4,862,037 A 8/1989 Farber et al.
4,867,561 A 9/1989 Fujii et al.
4,871,917 A 10/1989 O'Farrell et al.
4,872,051 A 10/1989 Dye
4,881,019 A 11/1989 Shiraishi et al.
4,882,565 A 11/1989 Gallmeyer
4,886,960 A 12/1989 Molyneux et al.
4,891,559 A 1/1990 Matsumoto et al.
4,892,345 A 1/1990 Rachael, III
4,895,790 A 1/1990 Swanson et al.
4,896,030 A 1/1990 Miyaji
4,907,870 A 3/1990 Brucker
4,910,591 A 3/1990 Petrossian et al.
4,917,477 A 4/1990 Bechtel et al.
4,937,796 A 6/1990 Tendler
4,953,305 A 9/1990 Van Lente et al.
4,956,591 A 9/1990 Schierbeek et al.
4,961,625 A 10/1990 Wood et al.
4,967,319 A 10/1990 Seko
4,970,653 A 11/1990 Kenue
4,971,430 A 11/1990 Lynas
4,974,078 A 11/1990 Tsai
4,987,357 A 1/1991 Masaki
4,991,054 A 2/1991 Walters
5,001,558 A 3/1991 Burley et al.
5,003,288 A 3/1991 Wilhelm
5,012,082 A 4/1991 Watanabe
5,016,977 A 5/1991 Baude et al.
5,027,001 A 6/1991 Torbert
5,027,200 A 6/1991 Petrossian et al.
5,044,706 A 9/1991 Chen
5,055,668 A 10/1991 French
5,059,877 A 10/1991 Teder
5,064,274 A 11/1991 Alten
5,072,154 A 12/1991 Chen
5,075,768 A 12/1991 Wirtz et al.
5,086,253 A 2/1992 Lawler
5,096,287 A 3/1992 Kakinami et al.
5,097,362 A 3/1992 Lynas
5,121,200 A 6/1992 Choi
5,124,549 A 6/1992 Michaels et al.
5,130,709 A 7/1992 Toyama et al.
5,148,014 A 9/1992 Lynam et al.
5,166,681 A 11/1992 Bottesch et al.
5,168,378 A 12/1992 Black

(56) **References Cited**

U.S. PATENT DOCUMENTS

5,170,374 A 12/1992 Shimohigashi et al.
5,172,235 A 12/1992 Wilm et al.
5,177,606 A 1/1993 Koshizawa
5,177,685 A 1/1993 Davis et al.
5,182,502 A 1/1993 Slotkowski et al.
5,184,956 A 2/1993 Langlais et al.
5,189,561 A 2/1993 Hong
5,193,000 A 3/1993 Lipton et al.
5,193,029 A 3/1993 Schofield et al.
5,204,778 A 4/1993 Bechtel
5,208,701 A 5/1993 Maeda
5,245,422 A 9/1993 Borcherts et al.
5,253,109 A 10/1993 O'Farrell et al.
5,276,389 A 1/1994 Levers
5,285,060 A 2/1994 Larson et al.
5,289,182 A 2/1994 Brillard et al.
5,289,321 A 2/1994 Secor
5,305,012 A 4/1994 Faris
5,307,136 A 4/1994 Saneyoshi
5,309,137 A 5/1994 Kajiwara
5,313,072 A 5/1994 Vachss
5,325,096 A 6/1994 Pakett
5,325,386 A 6/1994 Jewell et al.
5,329,206 A 7/1994 Slotkowski et al.
5,331,312 A 7/1994 Kudoh
5,336,980 A 8/1994 Levers
5,341,437 A 8/1994 Nakayama
5,351,044 A 9/1994 Mathur et al.
5,355,118 A 10/1994 Fukuhara
5,374,852 A 12/1994 Parkes
5,386,285 A 1/1995 Asayama
5,394,333 A 2/1995 Kao
5,406,395 A 4/1995 Wilson et al.
5,410,346 A 4/1995 Saneyoshi et al.
5,414,257 A 5/1995 Stanton
5,414,461 A 5/1995 Kishi et al.
5,416,313 A 5/1995 Larson et al.
5,416,318 A 5/1995 Hegyi
5,416,478 A 5/1995 Morinaga
5,424,952 A 6/1995 Asayama
5,426,294 A 6/1995 Kobayashi et al.
5,430,431 A 7/1995 Nelson
5,434,407 A 7/1995 Bauer et al.
5,440,428 A 8/1995 Hegg et al.
5,444,478 A 8/1995 Lelong et al.
5,451,822 A 9/1995 Bechtel et al.
5,457,493 A 10/1995 Leddy et al.
5,461,357 A 10/1995 Yoshioka et al.
5,461,361 A 10/1995 Moore
5,469,298 A 11/1995 Suman et al.
5,471,515 A 11/1995 Fossum et al.
5,475,494 A 12/1995 Nishida et al.
5,487,116 A 1/1996 Nakano et al.
5,498,866 A 3/1996 Bendicks et al.
5,500,766 A 3/1996 Stonecypher
5,510,983 A 4/1996 Lino
5,515,448 A 5/1996 Nishitani
5,521,633 A 5/1996 Nakajima et al.
5,528,698 A 6/1996 Kamei et al.
5,529,138 A 6/1996 Shaw et al.
5,530,240 A 6/1996 Larson et al.
5,530,420 A 6/1996 Tsuchiya et al.
5,535,314 A 7/1996 Alves et al.
5,537,003 A 7/1996 Bechtel et al.
5,539,397 A 7/1996 Asanuma et al.
5,541,590 A 7/1996 Nishio
5,550,677 A 8/1996 Schofield et al.
5,555,312 A 9/1996 Shima et al.
5,555,555 A 9/1996 Sato et al.
5,568,027 A 10/1996 Teder
5,574,443 A 11/1996 Hsieh
5,576,687 A 11/1996 Blank et al.
5,581,464 A 12/1996 Woll et al.
5,594,222 A 1/1997 Caldwell
5,614,788 A 3/1997 Mullins
5,619,370 A 4/1997 Guinosso
5,632,092 A 5/1997 Blank et al.
5,634,709 A 6/1997 Iwama
5,642,299 A 6/1997 Hardin et al.
5,648,835 A 7/1997 Uzawa
5,650,944 A 7/1997 Kise
5,660,454 A 8/1997 Mori et al.
5,666,028 A 9/1997 Bechtel et al.
5,668,663 A 9/1997 Varaprasad et al.
5,670,935 A 9/1997 Schofield et al.
5,675,489 A 10/1997 Pomerleau
5,677,851 A 10/1997 Kingdon et al.
5,699,044 A 12/1997 Van Lente et al.
5,708,410 A 1/1998 Blank et al.
5,712,640 A 1/1998 Andou et al.
5,724,187 A 3/1998 Varaprasad et al.
5,724,316 A 3/1998 Brunts
5,737,226 A 4/1998 Olson et al.
5,757,949 A 5/1998 Kinoshita et al.
5,760,826 A 6/1998 Nayar
5,760,828 A 6/1998 Cortes
5,760,931 A 6/1998 Saburi et al.
5,760,962 A 6/1998 Schofield et al.
5,761,094 A 6/1998 Olson et al.
5,765,116 A 6/1998 Wilson-Jones et al.
5,781,437 A 7/1998 Wiemer et al.
5,786,772 A 7/1998 Schofield et al.
5,790,403 A 8/1998 Nakayama
5,790,973 A 8/1998 Blaker et al.
5,793,308 A 8/1998 Rosinski et al.
5,793,420 A 8/1998 Schmidt
5,796,094 A 8/1998 Schofield et al.
5,798,575 A 8/1998 O'Farrell et al.
5,802,727 A 9/1998 Blank et al.
5,825,527 A 10/1998 Forgette et al.
5,835,255 A 11/1998 Miles
5,837,994 A 11/1998 Stam et al.
5,844,505 A 12/1998 Van Ryzin
5,844,682 A 12/1998 Kiyomoto et al.
5,845,000 A 12/1998 Breed et al.
5,848,802 A 12/1998 Breed et al.
5,850,176 A 12/1998 Kinoshita et al.
5,850,254 A 12/1998 Takano et al.
5,867,591 A 2/1999 Onda
5,877,707 A 3/1999 Kowalick
5,877,897 A 3/1999 Schofield et al.
5,878,370 A 3/1999 Olson
5,883,605 A 3/1999 Knapp
5,883,739 A 3/1999 Ashihara et al.
5,884,212 A 3/1999 Lion
5,890,021 A 3/1999 Onoda
5,896,085 A 4/1999 Mori et al.
5,899,956 A 5/1999 Chan
5,914,815 A 6/1999 Bos
5,923,027 A 7/1999 Stam et al.
5,926,117 A 7/1999 Gunji et al.
5,929,786 A 7/1999 Schofield et al.
5,940,120 A 8/1999 Frankhouse et al.
5,949,331 A 9/1999 Schofield et al.
5,956,181 A 9/1999 Lin
5,959,367 A 9/1999 O'Farrell et al.
5,959,555 A 9/1999 Furuta
5,962,833 A 10/1999 Hayashi
5,963,247 A 10/1999 Banitt
5,964,822 A 10/1999 Alland et al.
5,971,552 A 10/1999 O'Farrell et al.
5,986,796 A 11/1999 Miles
5,990,469 A 11/1999 Bechtel et al.
5,990,649 A 11/1999 Nagao et al.
6,001,486 A 12/1999 Varaprasad et al.
6,002,983 A 12/1999 Alland et al.
6,009,336 A 12/1999 Harris et al.
6,049,171 A 4/2000 Stam et al.
6,052,645 A 4/2000 Harada
6,066,933 A 5/2000 Ponziana
6,084,519 A 7/2000 Coulling et al.
6,087,953 A 7/2000 DeLine et al.
6,097,023 A 8/2000 Schofield et al.
6,097,024 A 8/2000 Stam et al.

(56) **References Cited**

U.S. PATENT DOCUMENTS

6,114,951 A 9/2000 Kinoshita et al.
6,116,743 A 9/2000 Hoek
6,124,647 A 9/2000 Marcus et al.
6,124,886 A 9/2000 DeLine et al.
6,139,172 A 10/2000 Bos et al.
6,144,022 A 11/2000 Tenenbaum et al.
6,170,956 B1 1/2001 Rumsey et al.
6,172,613 B1 1/2001 DeLine et al.
6,173,508 B1 1/2001 Strohmeyer, Jr.
6,175,164 B1 1/2001 O'Farrell et al.
6,175,300 B1 1/2001 Kendrick
6,198,409 B1 3/2001 Schofield et al.
6,201,642 B1 3/2001 Bos
6,222,447 B1 4/2001 Schofield et al.
6,222,460 B1 4/2001 DeLine et al.
6,243,003 B1 6/2001 DeLine et al.
6,246,955 B1 6/2001 Nishikawa et al.
6,250,148 B1 6/2001 Lynam
6,259,412 B1 7/2001 Duroux
6,266,082 B1 7/2001 Yonezawa et al.
6,266,442 B1 7/2001 Laumeyer et al.
6,285,393 B1 9/2001 Shimoura et al.
6,291,906 B1 9/2001 Marcus et al.
6,294,989 B1 9/2001 Schofield et al.
6,297,781 B1 10/2001 Turnbull et al.
6,302,545 B1 10/2001 Schofield et al.
6,310,611 B1 10/2001 Caldwell
6,315,419 B1 11/2001 Platzer, Jr.
6,317,057 B1 11/2001 Lee
6,320,176 B1 11/2001 Schofield et al.
6,320,282 B1 11/2001 Caldwell
6,329,925 B1 12/2001 Skiver et al.
6,333,759 B1 12/2001 Mazzilli
6,341,523 B2 1/2002 Lynam
6,346,698 B1 2/2002 Turnbull
6,353,392 B1 3/2002 Schofield et al.
6,360,170 B1 3/2002 Ishikawa et al.
6,366,213 B2 4/2002 DeLine et al.
6,370,329 B1 4/2002 Teuchert
6,396,397 B1 5/2002 Bos et al.
6,407,468 B1 6/2002 LeVesque et al.
6,411,204 B1 6/2002 Bloomfield et al.
6,411,328 B1 6/2002 Franke et al.
6,420,800 B1 7/2002 LeVesque et al.
6,420,975 B1 7/2002 DeLine et al.
6,424,273 B1 7/2002 Gutta et al.
6,428,172 B1 8/2002 Hutzel et al.
6,430,303 B1 8/2002 Naoi et al.
6,433,676 B2 8/2002 DeLine et al.
6,433,817 B1 8/2002 Guerra
6,442,465 B2 8/2002 Breed et al.
6,477,464 B2 11/2002 McCarthy et al.
6,485,155 B1 11/2002 Duroux et al.
6,497,503 B1 12/2002 Dassanayake et al.
6,498,620 B2 12/2002 Schofield et al.
6,513,252 B1 2/2003 Schierbeek
6,516,664 B2 2/2003 Lynam
6,523,964 B2 2/2003 Schofield et al.
6,534,884 B2 3/2003 Marcus et al.
6,539,306 B2 3/2003 Turnbull
6,547,133 B1 4/2003 Devries, Jr. et al.
6,552,326 B2 4/2003 Turnbull
6,553,130 B1 4/2003 Lemelson et al.
6,559,435 B2 5/2003 Schofield et al.
6,572,233 B1 6/2003 Northman et al.
6,574,033 B1 6/2003 Chui et al.
6,578,017 B1 6/2003 Ebersole et al.
6,587,573 B1 7/2003 Stam et al.
6,589,625 B1 7/2003 Kothari et al.
6,593,565 B2 7/2003 Heslin et al.
6,594,583 B2 7/2003 Ogura et al.
6,611,610 B1 8/2003 Stam et al.
6,627,918 B2 9/2003 Getz et al.
6,631,316 B2 10/2003 Stam et al.
6,631,994 B2 10/2003 Suzuki et al.
6,636,258 B2 10/2003 Strumolo
6,642,851 B2 11/2003 Deline et al.
6,648,477 B2 11/2003 Hutzel et al.
6,650,233 B2 11/2003 DeLine et al.
6,650,455 B2 11/2003 Miles
6,672,731 B2 1/2004 Schnell et al.
6,674,562 B1 1/2004 Miles
6,678,056 B2 1/2004 Downs
6,678,614 B2 1/2004 McCarthy et al.
6,680,792 B2 1/2004 Miles
6,690,268 B2 2/2004 Schofield et al.
6,700,605 B1 3/2004 Toyoda et al.
6,703,925 B2 3/2004 Steffel
6,704,434 B1 3/2004 Sakoh et al.
6,704,621 B1 3/2004 Stein et al.
6,710,908 B2 3/2004 Miles et al.
6,711,474 B1 3/2004 Treyz et al.
6,714,331 B2 3/2004 Lewis et al.
6,717,610 B1 4/2004 Bos et al.
6,735,506 B2 5/2004 Breed et al.
6,737,630 B2 5/2004 Turnbull
6,741,377 B2 5/2004 Miles
6,744,353 B2 6/2004 Sjonell
6,757,109 B2 6/2004 Bos
6,762,867 B2 7/2004 Lippert et al.
6,794,119 B2 9/2004 Miles
6,795,221 B1 9/2004 Urey
6,802,617 B2 10/2004 Schofield et al.
6,806,452 B2 10/2004 Bos et al.
6,822,563 B2 11/2004 Bos et al.
6,823,241 B2 11/2004 Shirato et al.
6,824,281 B2 11/2004 Schofield et al.
6,831,261 B2 12/2004 Schofield et al.
6,847,487 B2 1/2005 Burgner
6,870,655 B1 3/2005 Northman et al.
6,882,287 B2 4/2005 Schofield
6,889,161 B2 5/2005 Winner et al.
6,891,563 B2 5/2005 Schofield et al.
6,909,753 B2 6/2005 Meehan et al.
6,946,978 B2 9/2005 Schofield
6,953,253 B2 10/2005 Schofield et al.
6,968,736 B2 11/2005 Lynam
6,975,775 B2 12/2005 Rykowski et al.
7,004,593 B2 2/2006 Weller et al.
7,004,606 B2 2/2006 Schofield
7,005,974 B2 2/2006 McMahon et al.
7,038,577 B2 5/2006 Pawlicki et al.
7,046,448 B2 5/2006 Burgner
7,050,908 B1 5/2006 Schwartz et al.
7,062,300 B1 6/2006 Kim
7,065,432 B2 6/2006 Moisel et al.
7,085,637 B2 8/2006 Breed et al.
7,092,548 B2 8/2006 Laumeyer et al.
7,095,567 B2 8/2006 Troxell et al.
7,111,968 B2 9/2006 Bauer et al.
7,116,246 B2 10/2006 Winter et al.
7,145,519 B2 12/2006 Takahashi et al.
7,149,613 B2 12/2006 Stam et al.
7,161,616 B1 1/2007 Okamoto et al.
7,167,796 B2 1/2007 Taylor et al.
7,168,830 B2 1/2007 Pastrick et al.
7,175,291 B1 2/2007 Li
7,184,190 B2 2/2007 McCabe et al.
7,195,381 B2 3/2007 Lynam et al.
7,202,776 B2 4/2007 Breed
7,206,697 B2 4/2007 Olney et al.
7,224,324 B2 5/2007 Quist et al.
7,227,459 B2 6/2007 Bos et al.
7,227,472 B1 6/2007 Roe
7,227,611 B2 6/2007 Hull et al.
7,230,640 B2 6/2007 Regensburger et al.
7,245,231 B2 7/2007 Kiefer et al.
7,248,283 B2 7/2007 Takagi et al.
7,248,718 B2 7/2007 Comaniciu et al.
7,249,860 B2 7/2007 Kulas et al.
7,253,723 B2 8/2007 Lindahl et al.
7,255,451 B2 8/2007 McCabe et al.
7,265,656 B2 9/2007 McMahon et al.
7,274,501 B2 9/2007 McCabe et al.

(56) **References Cited**

U.S. PATENT DOCUMENTS

7,289,037	B2	10/2007	Uken et al.
7,295,229	B2	11/2007	Kumata et al.
7,301,466	B2	11/2007	Asai
7,302,344	B2	11/2007	Olney et al.
7,311,406	B2	12/2007	Schofield et al.
7,317,386	B2	1/2008	Lengning et al.
7,324,043	B2	1/2008	Purden et al.
7,325,934	B2	2/2008	Schofield et al.
7,327,226	B2	2/2008	Turnbull et al.
7,329,013	B2	2/2008	Blank et al.
7,331,415	B2	2/2008	Hawes et al.
7,338,177	B2	3/2008	Lynam
7,339,149	B1	3/2008	Schofield et al.
7,344,261	B2	3/2008	Schofield et al.
7,349,582	B2	3/2008	Takeda et al.
7,355,524	B2	4/2008	Schofield
7,360,932	B2	4/2008	Uken et al.
7,368,714	B2	5/2008	Remillard et al.
7,370,983	B2	5/2008	DeWind et al.
7,375,803	B1	5/2008	Bamji
7,379,817	B1	5/2008	Tyson et al.
7,380,633	B2	6/2008	Shen et al.
7,380,948	B2	6/2008	Schofield et al.
7,388,182	B2	6/2008	Schofield et al.
7,391,563	B2	6/2008	McCabe et al.
7,402,786	B2	7/2008	Schofield et al.
7,423,248	B2	9/2008	Schofield et al.
7,423,821	B2	9/2008	Bechtel et al.
7,425,076	B2	9/2008	Schofield et al.
7,446,650	B2	11/2008	Scholfield et al.
7,459,664	B2	12/2008	Schofield et al.
7,488,099	B2	2/2009	Fogg et al.
7,526,103	B2	4/2009	Schofield et al.
7,541,743	B2	6/2009	Salmeen et al.
7,561,181	B2	7/2009	Schofield et al.
7,565,006	B2	7/2009	Stam et al.
7,581,859	B2	9/2009	Lynam
7,592,928	B2	9/2009	Chinomi et al.
7,616,781	B2	11/2009	Schofield et al.
7,619,508	B2	11/2009	Lynam et al.
7,626,749	B2	12/2009	Baur et al.
7,633,383	B2	12/2009	Dunsmoir et al.
7,639,149	B2	12/2009	Katoh
7,655,894	B2	2/2010	Schofield et al.
7,676,087	B2	3/2010	Dhua et al.
7,720,580	B2	5/2010	Higgins-Luthman
7,792,329	B2	9/2010	Schofield et al.
7,843,451	B2	11/2010	Lafon
7,855,755	B2	12/2010	Weller et al.
7,855,778	B2	12/2010	Yung et al.
7,859,565	B2	12/2010	Schofield et al.
7,877,175	B2	1/2011	Higgins-Luthman
7,881,496	B2	2/2011	Camilleri et al.
7,914,187	B2	3/2011	Higgins-Luthman et al.
7,930,160	B1	4/2011	Hosagrahara et al.
7,991,522	B2	8/2011	Higgins-Luthman
7,994,462	B2	8/2011	Schofield et al.
8,017,898	B2	9/2011	Lu et al.
8,095,310	B2	1/2012	Taylor et al.
8,098,142	B2	1/2012	Schofield et al.
8,194,133	B2	6/2012	DeWind et al.
8,203,440	B2	6/2012	Schofield et al.
8,222,588	B2	7/2012	Schofield et al.
8,224,031	B2	7/2012	Saito
8,314,689	B2	11/2012	Schofield et al.
8,324,552	B2	12/2012	Schofield et al.
8,386,114	B2	2/2013	Higgins-Luthman
9,264,672	B2	2/2016	Lynam
9,469,250	B2	10/2016	Lynam
9,598,014	B2	3/2017	Lynam
9,731,653	B2	8/2017	Lynam
10,053,012	B2	8/2018	Baur et al.
10,144,352	B2	12/2018	Lynam
10,336,255	B2	7/2019	Lynam
2002/0005778	A1	1/2002	Breed et al.
2002/0113873	A1	8/2002	Williams
2002/0140687	A1	10/2002	Takeda
2002/0167589	A1	11/2002	Schofield et al.
2003/0137586	A1	7/2003	Lewellen
2003/0222982	A1	12/2003	Hamdan et al.
2004/0164228	A1	8/2004	Fogg et al.
2005/0219852	A1	10/2005	Stam et al.
2005/0222753	A1	10/2005	Ishikawa
2005/0237385	A1	10/2005	Kosaka et al.
2006/0018511	A1	1/2006	Stam et al.
2006/0018512	A1	1/2006	Stam et al.
2006/0050018	A1	3/2006	Hutzel et al.
2006/0091813	A1	5/2006	Stam et al.
2006/0103727	A1	5/2006	Tseng
2006/0250501	A1	11/2006	Wildmann et al.
2007/0104476	A1	5/2007	Yasutomi et al.
2007/0109406	A1	5/2007	Schofield et al.
2007/0120657	A1	5/2007	Schofield et al.
2007/0188347	A1	8/2007	Schofield
2007/0242339	A1	10/2007	Bradley
2008/0068520	A1	3/2008	Minikey et al.
2008/0147321	A1	6/2008	Howard et al.
2008/0192132	A1	8/2008	Bechtel et al.
2009/0113509	A1	4/2009	Tseng et al.
2009/0160987	A1	6/2009	Bechtel et al.
2009/0256938	A1	10/2009	Bechtel et al.
2010/0066833	A1	3/2010	Ohshima et al.
2010/0082281	A1	4/2010	Nakamura et al.
2010/0097469	A1	4/2010	Blank et al.
2010/0201816	A1	8/2010	Lee et al.
2011/0304691	A1	12/2011	Newton et al.
2012/0045112	A1	2/2012	Lundblad et al.
2012/0062743	A1	3/2012	Lynam et al.
2012/0078469	A1*	3/2012	Karner B29C 45/0017 701/36
2012/0154591	A1	6/2012	Baur et al.
2012/0265416	A1	10/2012	Lu et al.
2014/0022390	A1	1/2014	Blank et al.
2014/0267732	A1	9/2014	Karner et al.

FOREIGN PATENT DOCUMENTS

EP	0426503	A1	5/1991
EP	0492591	A1	7/1992
EP	0640903	A1	1/1995
EP	0788947	A1	8/1997
EP	1074430	A1	2/2001
JP	59114139		7/1984
JP	6080953		5/1985
JP	6079889		10/1986
JP	6272245		5/1987
JP	S62131837	A	6/1987
JP	6414700		1/1989
JP	03099952		4/1991
JP	4114587	B2	4/1992
JP	H04127280	A	4/1992
JP	0577657		3/1993
JP	05050883		3/1993
JP	5213113		8/1993
JP	6227318	B2	8/1994
JP	06267304		9/1994
JP	06276524		9/1994
JP	06295601		10/1994
JP	07004170		1/1995
JP	0732936		2/1995
JP	0747878		2/1995
JP	07052706		2/1995
JP	0769125		3/1995
JP	07105496		4/1995
JP	2630604		7/1997
JP	200274339	A	3/2002
JP	2003083742	A	3/2003
JP	20041658	A	1/2004
JP	2007288586	A	11/2007
WO	1994019212	A2	9/1994
WO	1996038319	A2	12/1996
WO	2012145818	A1	11/2012
WO	2013074604	A2	5/2013
WO	2013086249	A2	6/2013

(56) **References Cited**

FOREIGN PATENT DOCUMENTS

OTHER PUBLICATIONS

Bow, Sing T., "Pattern Recognition and Image Preprocessing (Signal Processing and Communications)", CRC Press, Jan. 15, 2002, pp. 557-559.
Broggi et al., "Automatic Vehicle Guidance: The Experience of the ARGO Vehicle", World Scientific Publishing Co., 1999.
Broggi et al., "Multi-Resolution Vehicle Detection using Artificial Vision," IEEE Intelligent Vehicles Symposium of Jun. 2004.
Borenstein et al., "Where am I? Sensors and Method for Mobile Robot Positioning", University of Michigan, Apr. 1996, pp. 2, 125-128.
Kastrinaki et al., "A survey of video processing techniques for traffic applications".
Mei Chen et al., AURORA: A Vision-Based Roadway Departure Warning System, The Robotics Institute, Carnegie Mellon University, published Aug. 9, 1995.
Parker (ed.), McGraw-Hill Dictionary of Scientific and Technical Terms Fifth Edition (1993).
Philomin et al., "Pedestrain Tracking from a Moving Vehicle".
Pratt, "Digital Image Processing, Passage—ED.3", John Wiley & Sons, US, Jan. 1, 2001, pp. 657-659, XP002529771.
Sun et al., "On-road vehicle detection using optical sensors: a review".
Tokimaru et al., "CMOS Rear-View TV System with CCD Camera", National Technical Report vol. 34, No. 3, pp. 329-336, Jun. 1988 (Japan).
Van Leeuwen et al., "Motion Estimation with a Mobile Camera for Traffic Applications", IEEE, US, vol. 1, Oct. 3, 2000, pp. 58-63.
Van Leeuwen et al., "Motion Interpretation for In-Car Vision Systems", IEEE, US, vol. 1, Sep. 30, 2002, p. 135-140.
Van Leeuwen et al., "Requirements for Motion Estimation in Image Sequences for Traffic Applications", IEEE, US, vol. 1, May 24, 1999, pp. 145-150, XP010340272.
Van Leeuwen et al., "Real-Time Vehicle Tracking in Image Sequences", IEEE, US, vol. 3, May 21, 2001, pp. 2049-2054, XP010547308.
Vellacott, Oliver, "CMOS in Camera," IEE Review, pp. 111-114 (May 1994).
Vlacic et al. (Eds), "Intelligent Vehicle Tecnologies, Theory and Applications", Society of Automotive Engineers Inc., edited by SAE International, 2001.
Wang et al., CMOS Video Cameras, article, 1991, 4 pages, University of Edinburgh, UK.
Zheng et al., "An Adaptive System for Traffic Sign Recognition," IEEE Proceedings of the Intelligent Vehicles '94 Symposium, pp. 165-170 (Oct. 1994).
STIC, "Vehicle Camera Image Quality Improvement in Poor Visibility Conditions by Contrast Amplification" Scientific and Technical Information Center, Aug. 21, 2014.

* cited by examiner

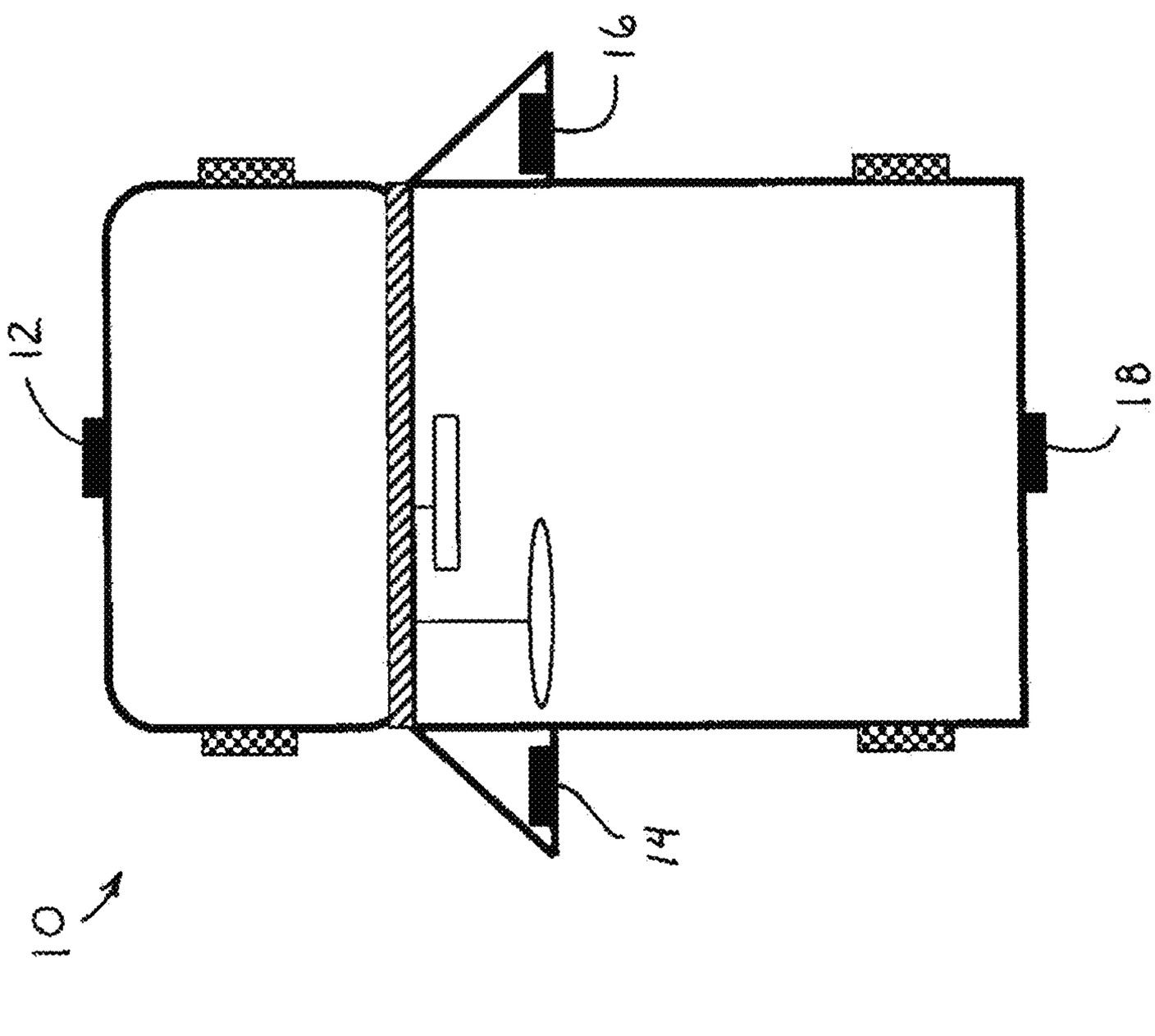

FIG. 1

Federal Register: December 7, 2010 (Volume 75, Number 234)

Page 76185-76250

Part IV
Department of Transportation
National Highway Traffic Safety Administration

49 CFR Parts 571 and 585
[Docket No.: NHTSA-2010-0162]

RIN 2127-AK43

Federal Motor Vehicle Safety Standard, Rearview Mirrors; Federal Motor Vehicle Safety Standard, Low-Speed Vehicles Phase-In Reporting Requirements; Proposed Rule

FIG. 2

S6.2.1.1 Field of view.

When tested in accordance with the procedures in S14.1 through S14.2.3, the rearview image shall display, in a location visible to a driver properly restrained by seat belts:

(a) a minimum of a 150-mm wide portion of each test object located at positions F and G in Figure 5; and

(b) the full width and height of each test object located at positions A through E in Figure 5.

S6.2.1.2 Size.

When the rearview image is measured in accordance with the procedures in S14.1 through S14.2.3, the calculated visual angle--subtended by the horizontal width of:

(a) the three test objects located at positions A, B, and C in Figure 5 shall average not less than 5 minutes of arc; and

(b) the angular size of each individual test object (A, B, and C) shall not be less than 3 minutes of arc.

FIG. 3

- Rear Visibility
  - The rear view image shall display a 150 mm wide portion of test objects F & G and the full width & height of test objects A through E as positioned in FIGS. 6 and 7.
  - Test objects F & G are marked with a 150 mm wide colored vertical stripe established on a contrast-colored background – the stripe shall be faced towards the camera as shown in FIG. 7.
  - Test objects F & G meet the NHTSA requirements if the display can show the full width of the colored vertical stripe at at least a portion of the test object. This is met by there being at least some amount of contrast-colored background on both sides of the stripe visible on the display. It is not necessary to see the full width & height of test objects F & G. See FIG. 7 for a sample image.
  - Test objects A-E meet the NHTSA requirements if their full width & height are visible in the display as shown in FIG. 7.

FIG. 4

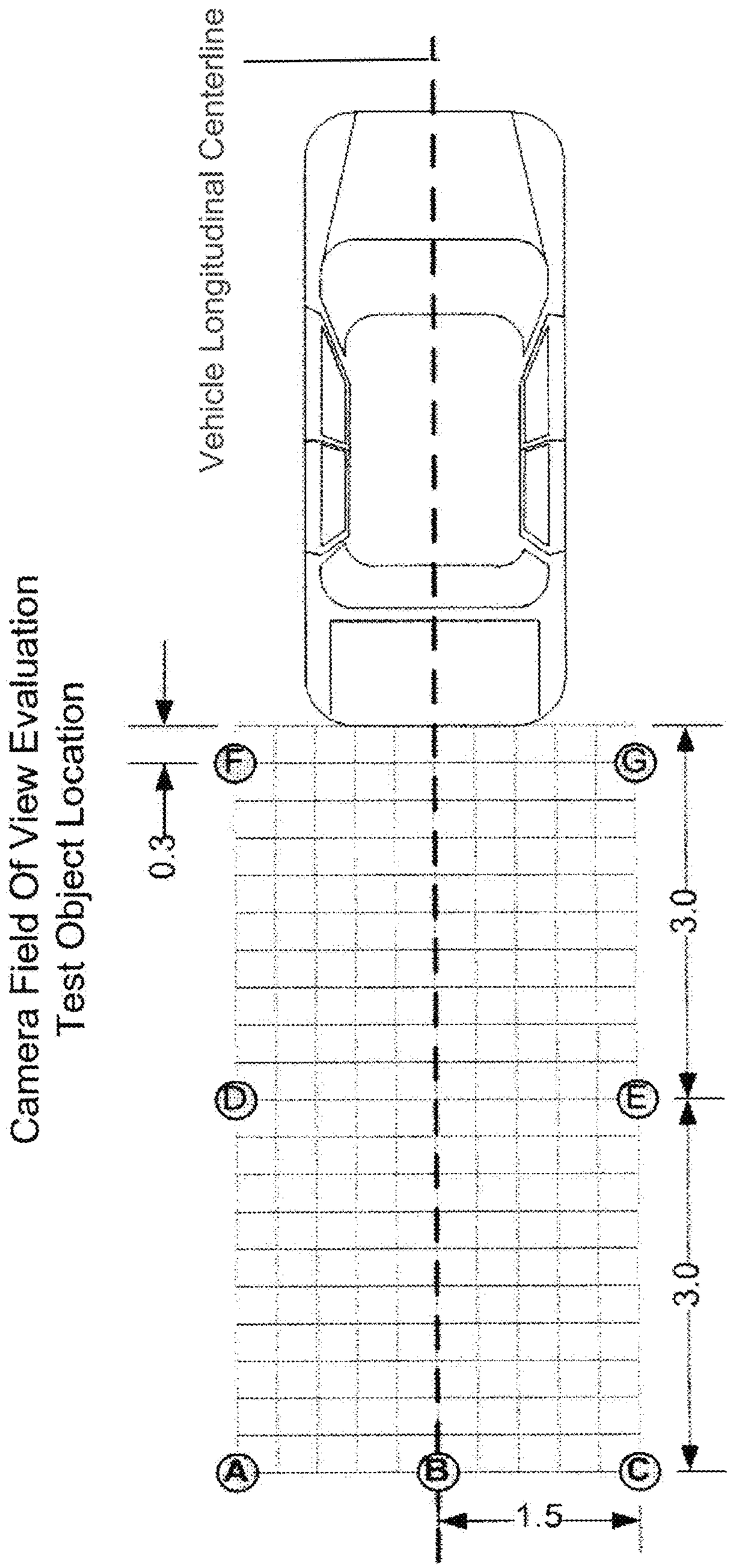
Camera Field Of View Evaluation
Test Object Location
Vehicle Longitudinal Centerline
0.3
F
G
D
E
A
B
C
3.0
3.0
1.5

FIG. 5

Test vehicle equipped with 7.8" diagonal video screen located in center console approximately 32" from driver's eyes

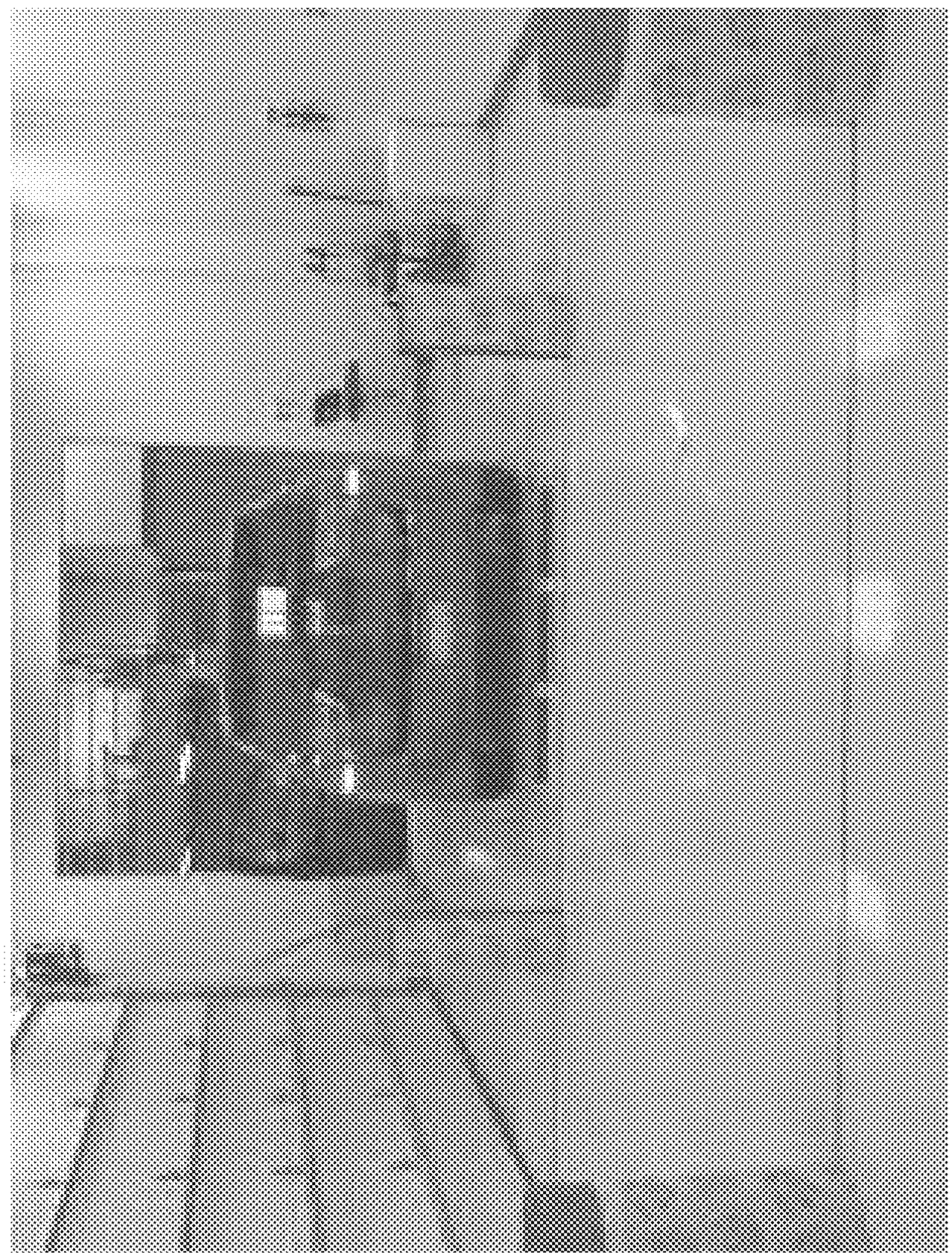

FIG. 6

Video output from rear backup camera as displayed full-screen

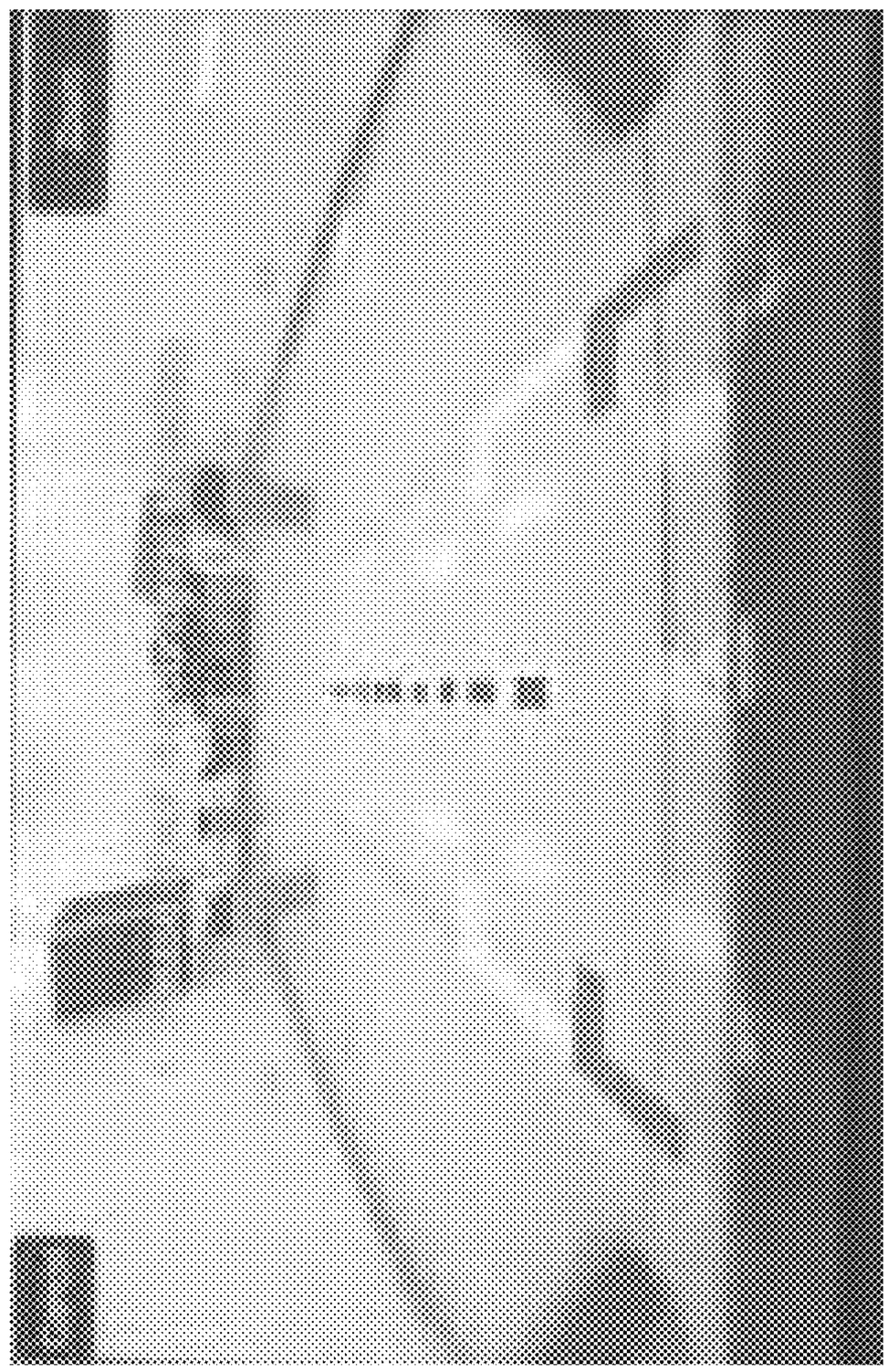

FIG. 7

Distance (inches) of Test Object displayed on screen from driver's eyes	Min. width (mm) of Test Object on screen that subtends a min. 5 minutes of arc angle
15	0.55
20	0.74
22	0.81
24	0.89
26	0.96
28	1.03
30	1.11
32	1.18
34	1.26
36	1.33
38	1.4
40	1.48
45	1.66
50	1.85

FIG. 8

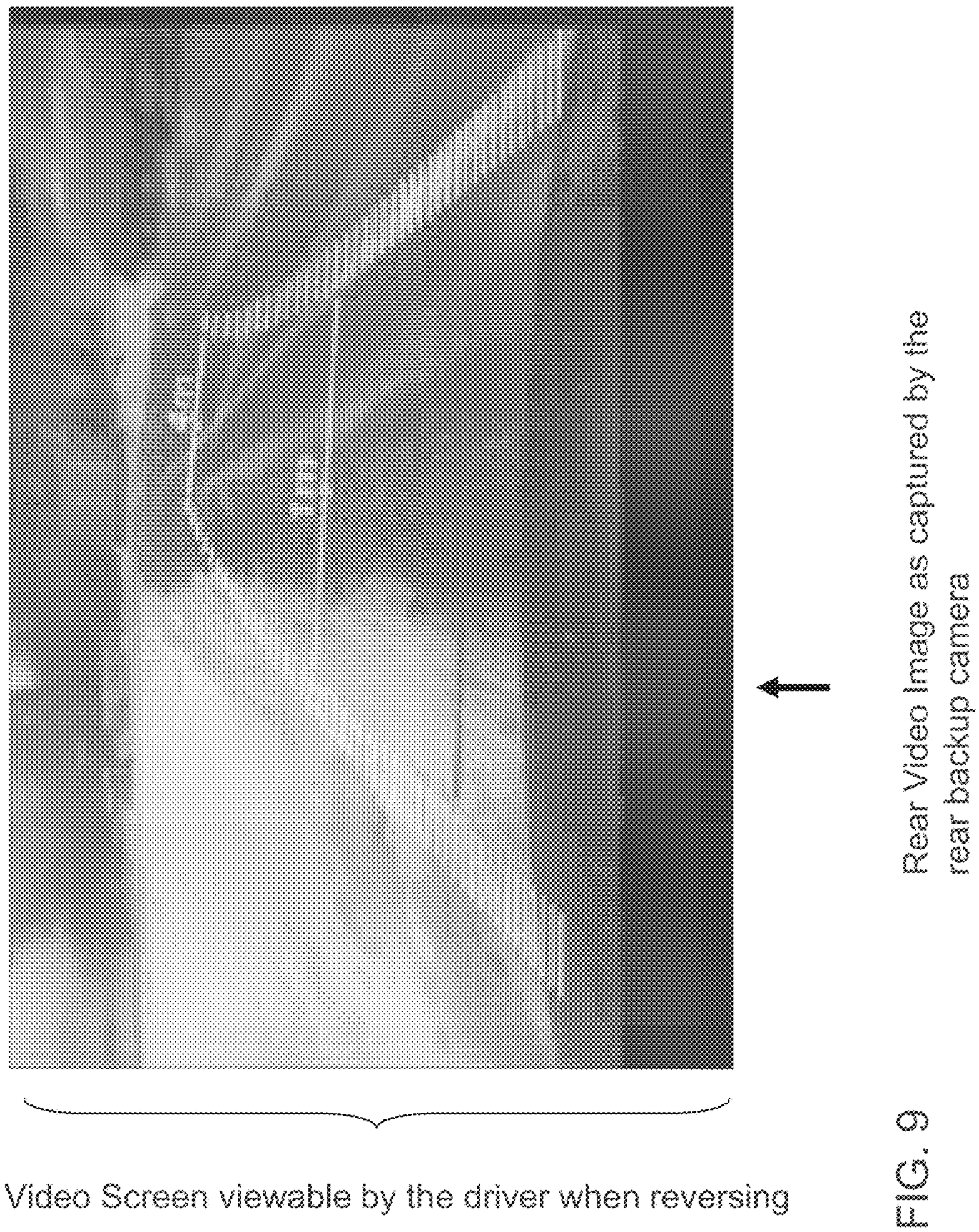
Rear Video Image as captured by the rear backup camera
Video Screen viewable by the driver when reversing

FIG. 9

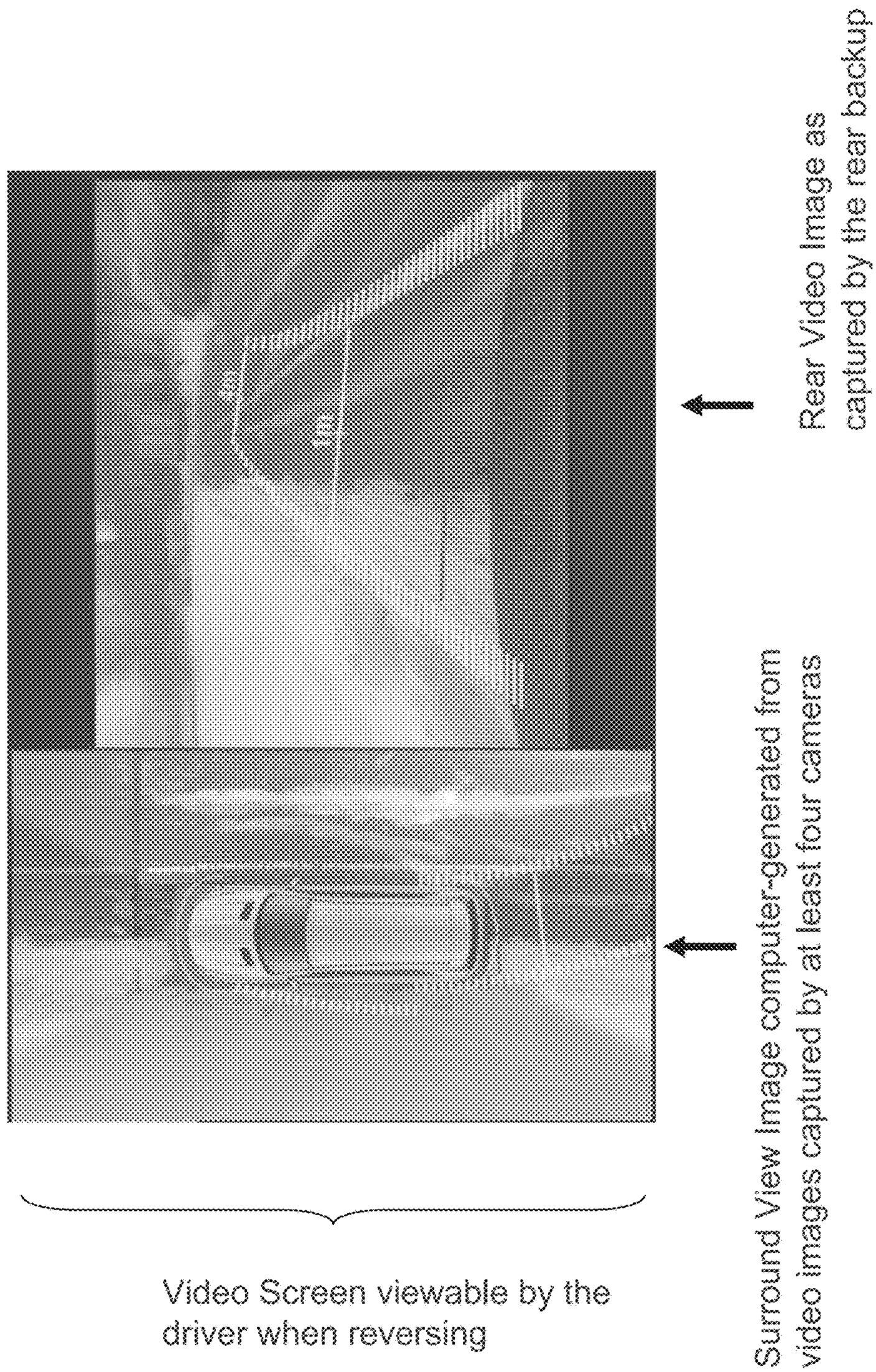
Rear Video Image as captured by the rear backup camera
Surround View Image computer-generated from video images captured by at least four cameras
Video Screen viewable by the driver when reversing

FIG. 10

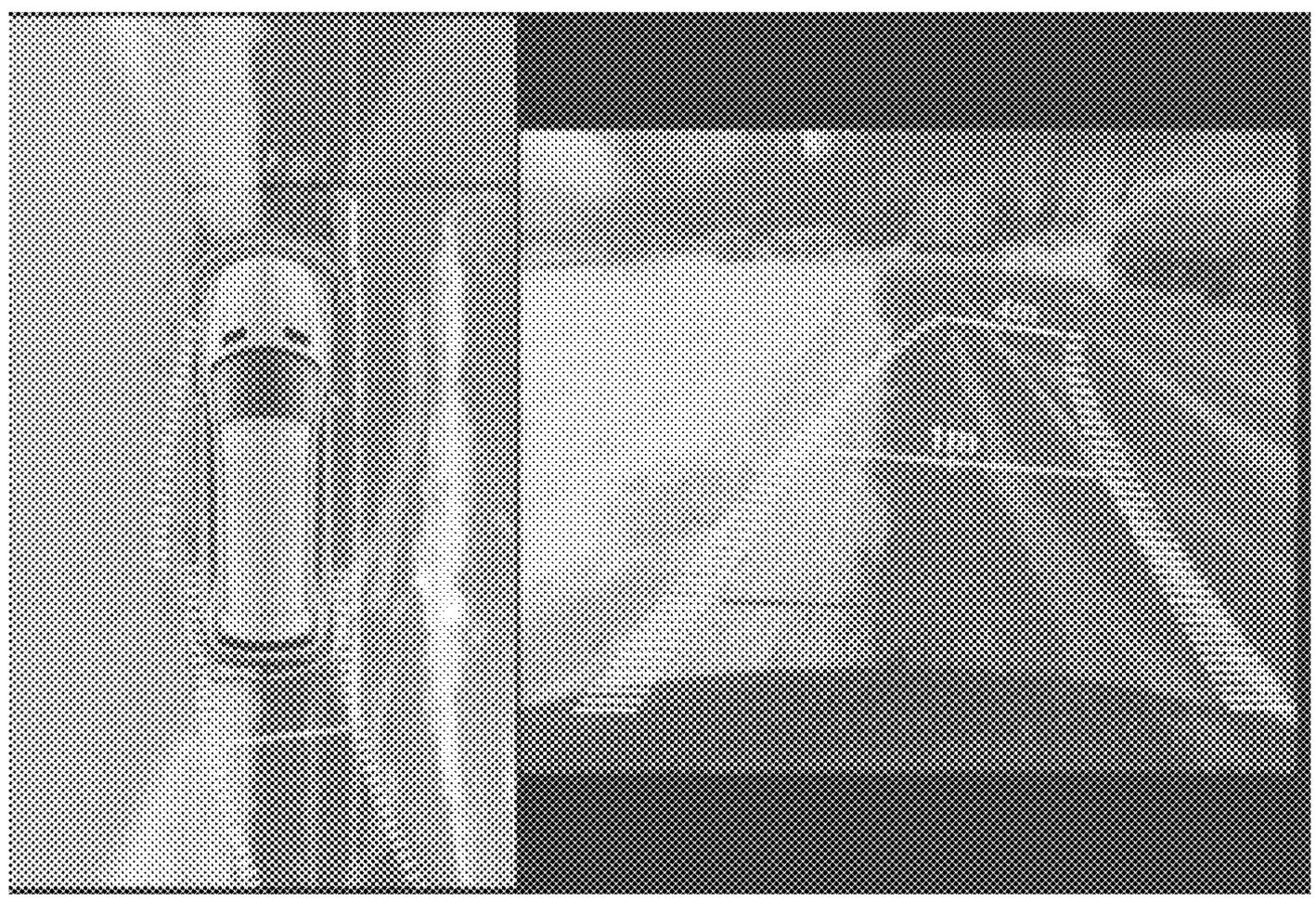

FIG. 11

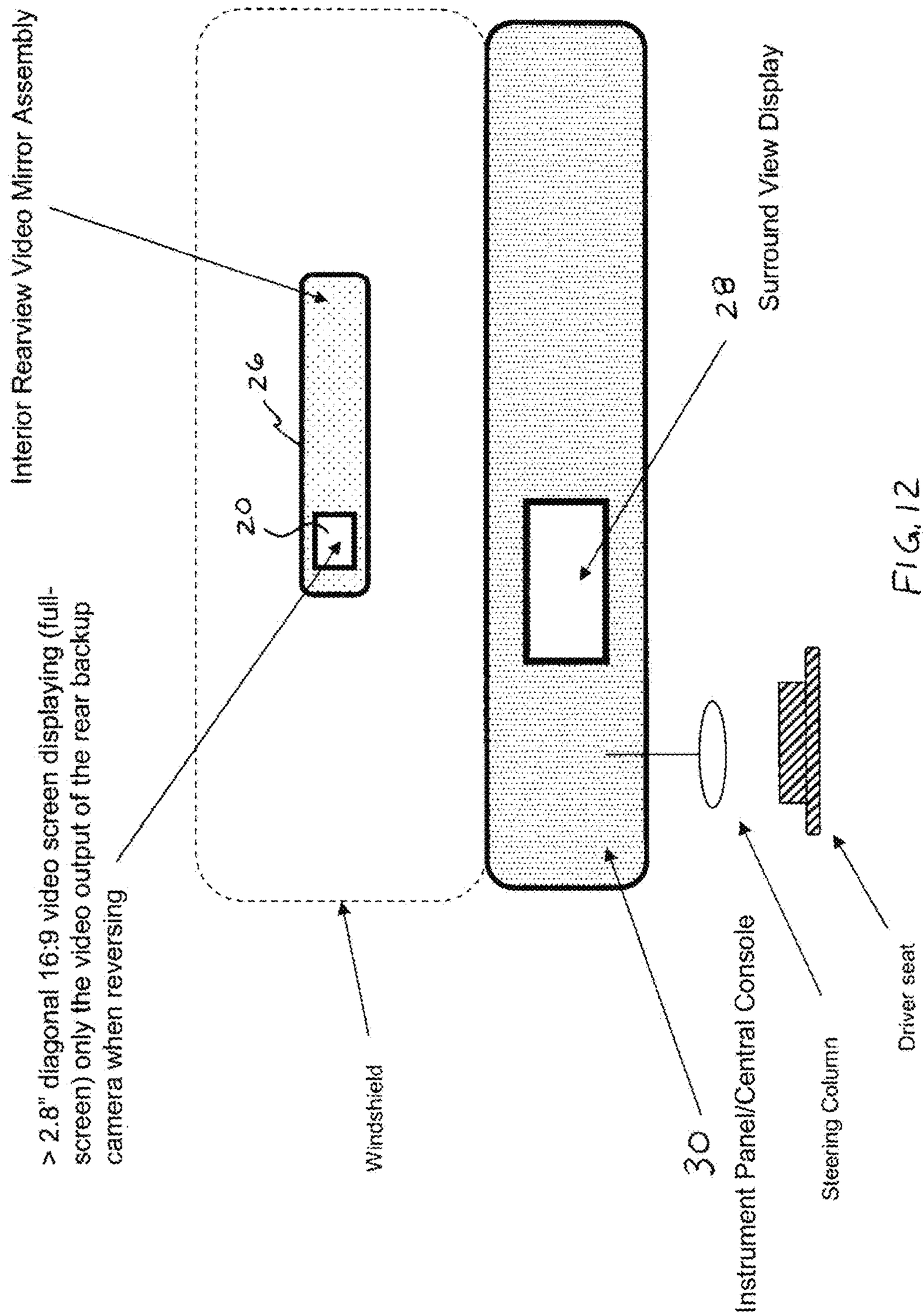
Interior Rearview Video Mirror Assembly
26
20
> 2.8" diagonal 16:9 video screen displaying (full-screen) only the video output of the rear backup camera when reversing
Windshield
28
Surround View Display
30
Instrument Panel/Central Console
Steering Column
Driver seat

FIG. 12

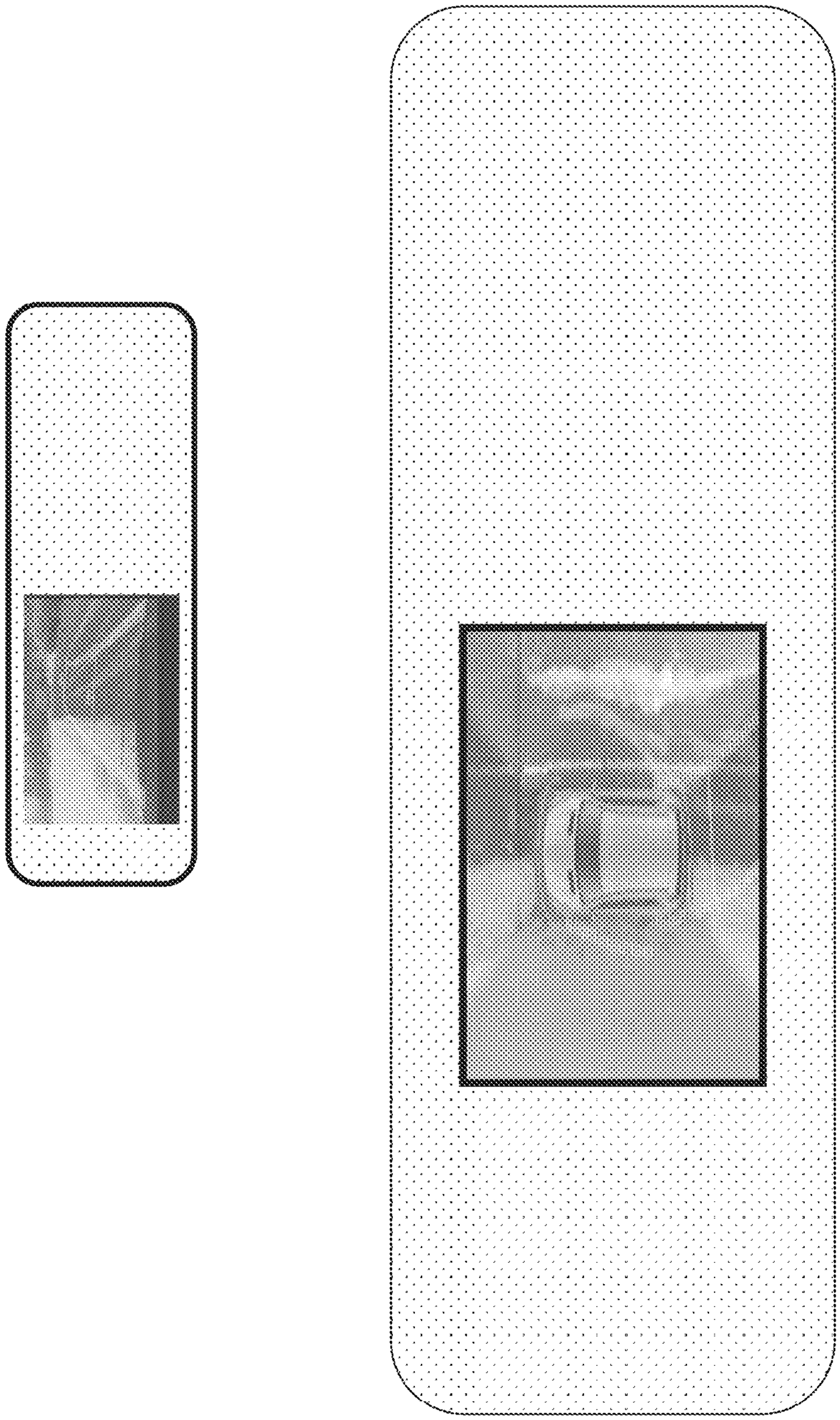

FIG. 13

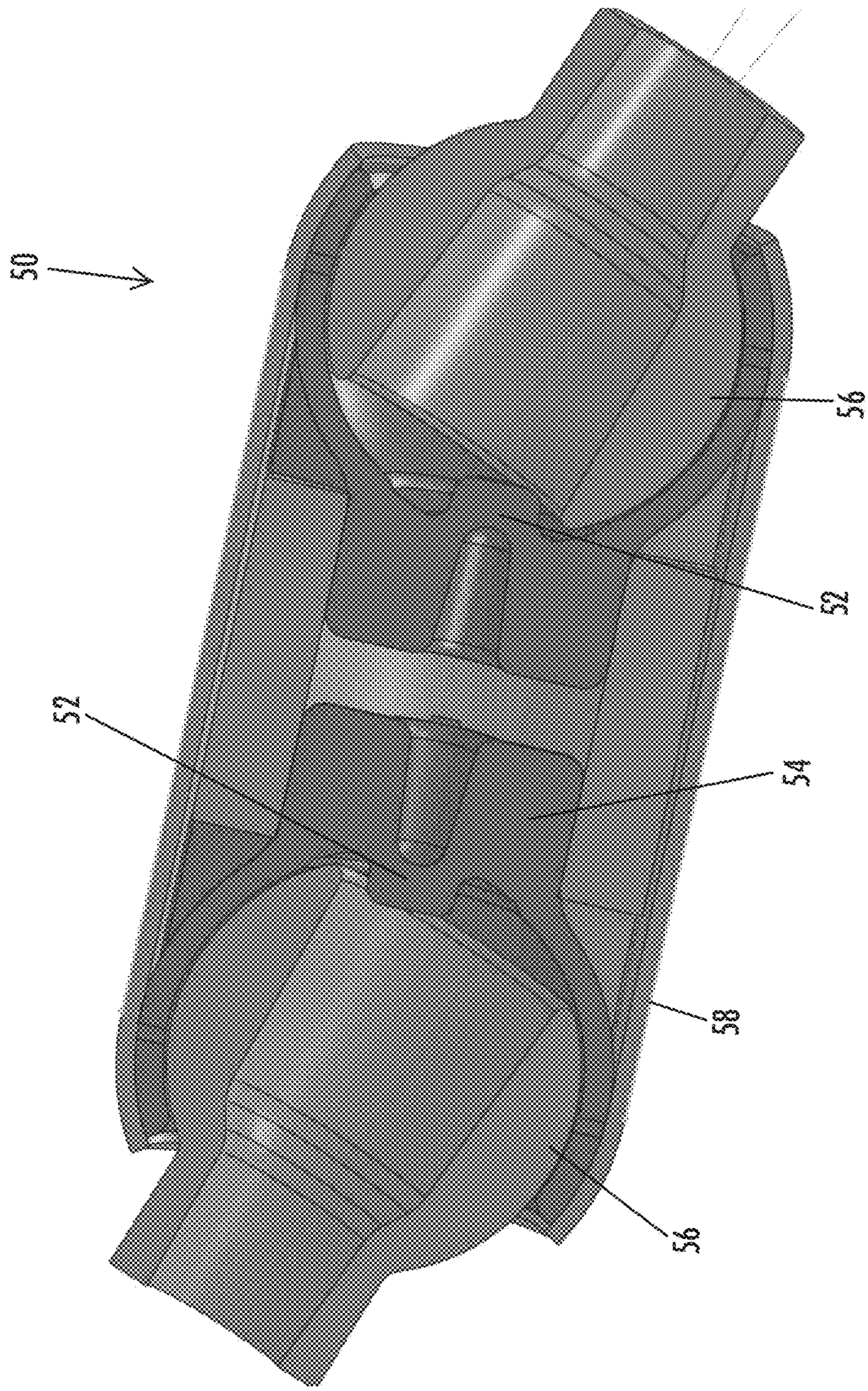

FIG. 14

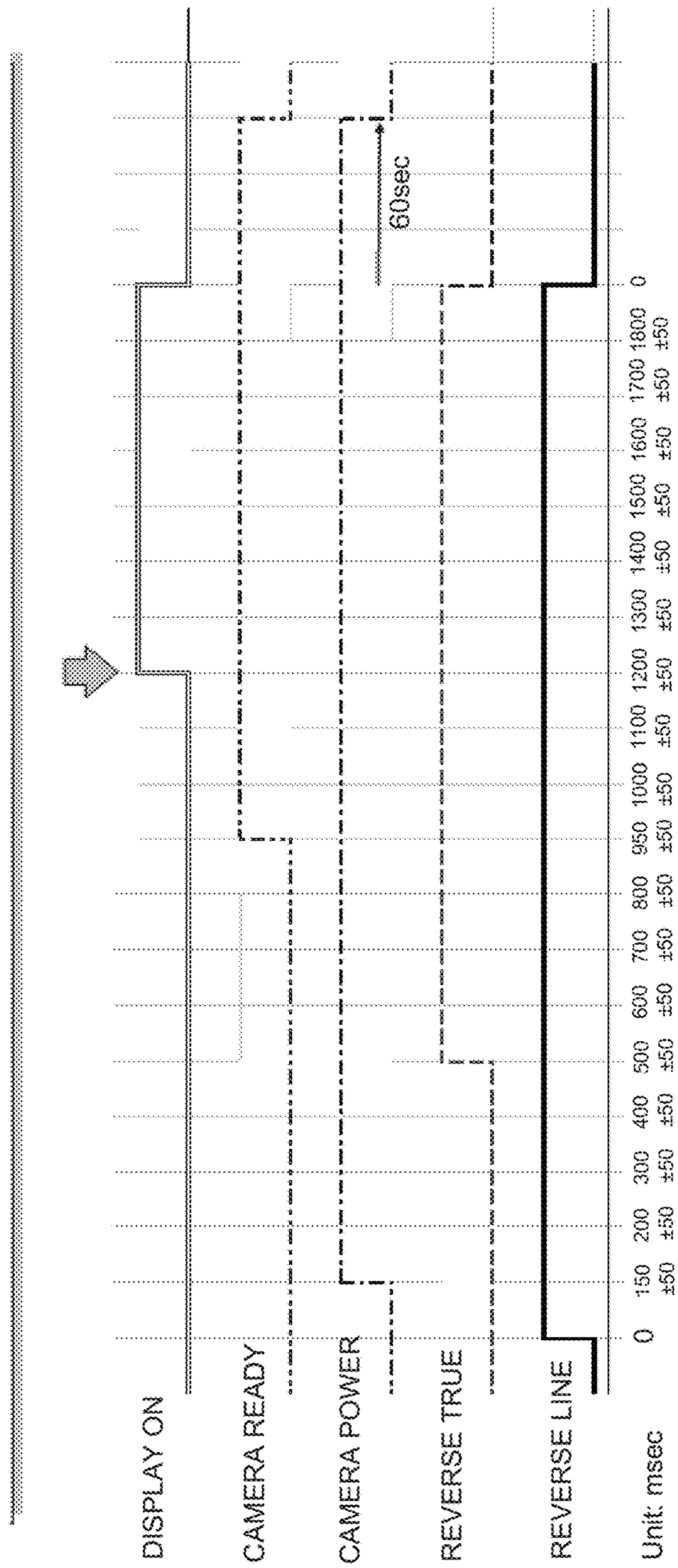
DISPLAY ON
CAMERA READY
CAMERA POWER
REVERSE TRUE
REVERSE LINE
60sec
Unit: msec
0
150 ±50
200 ±50
300 ±50
400 ±50
500 ±50
600 ±50
700 ±50
800 ±50
950 ±50
1000 ±50
1100 ±50
1200 ±50
1300 ±50
1400 ±50
1500 ±50
1600 ±50
1700 ±50
1800 ±50
0

FIG. 15

Features:

- EC/Video LED indicator. Day (full) intensity only.
- No Non-Volatile required.
- Rear sensor thru glass sensing for LCM dimming and EC functions.
- Thermal algorithms for fail safe LCM operation.
- Dual Outside EC.
- Camera power provided from VideoMirror. 6.6V nominal. 200mA max.
- Switch disable/enables EC and Video.

Mirror button function / control Table 1A

	(Ignition On)	
Switch Function	***Not in Reverse***	***In Reverse***
Momentary	EC on/off LED on/off (follows EC state.)	Display on/off (LED does not change state except for blinking)

- Camera will be powered at 150 mS ± 50mS after reverse.
- Camera will be un-powered 60 seconds after reverse is removed.
- LCM default is enabled (ON) at each new Ignition cycle.
- LCM state is remembered after Reverse cycle. (if turned on/off, will remain on/off until button is pressed again in reverse or an ignition cycle)
- LCM display will show a stable video image at 1200mS + 300mS after reverse is activated. (Given camera signal is stable at that time)
- LCM shall detect (and turn off the display with no flicker) when the Video signal is broken i.e., Video plus and/or Video minus disconnected.
- LCM will shut off immediately after the reverse signal is removed. Optional: delay feature hardware selectable.
- LED indicator
- No video at 1200mS + 300mS in reverse response:
  - Turn off backlight and blink LED at 1Hz.
  - Enable video display immediately when a good camera video signal becomes present while flashing.

VideoMirror (DoD) illumination targeted at 1500cd/m^2.

FIG. 16

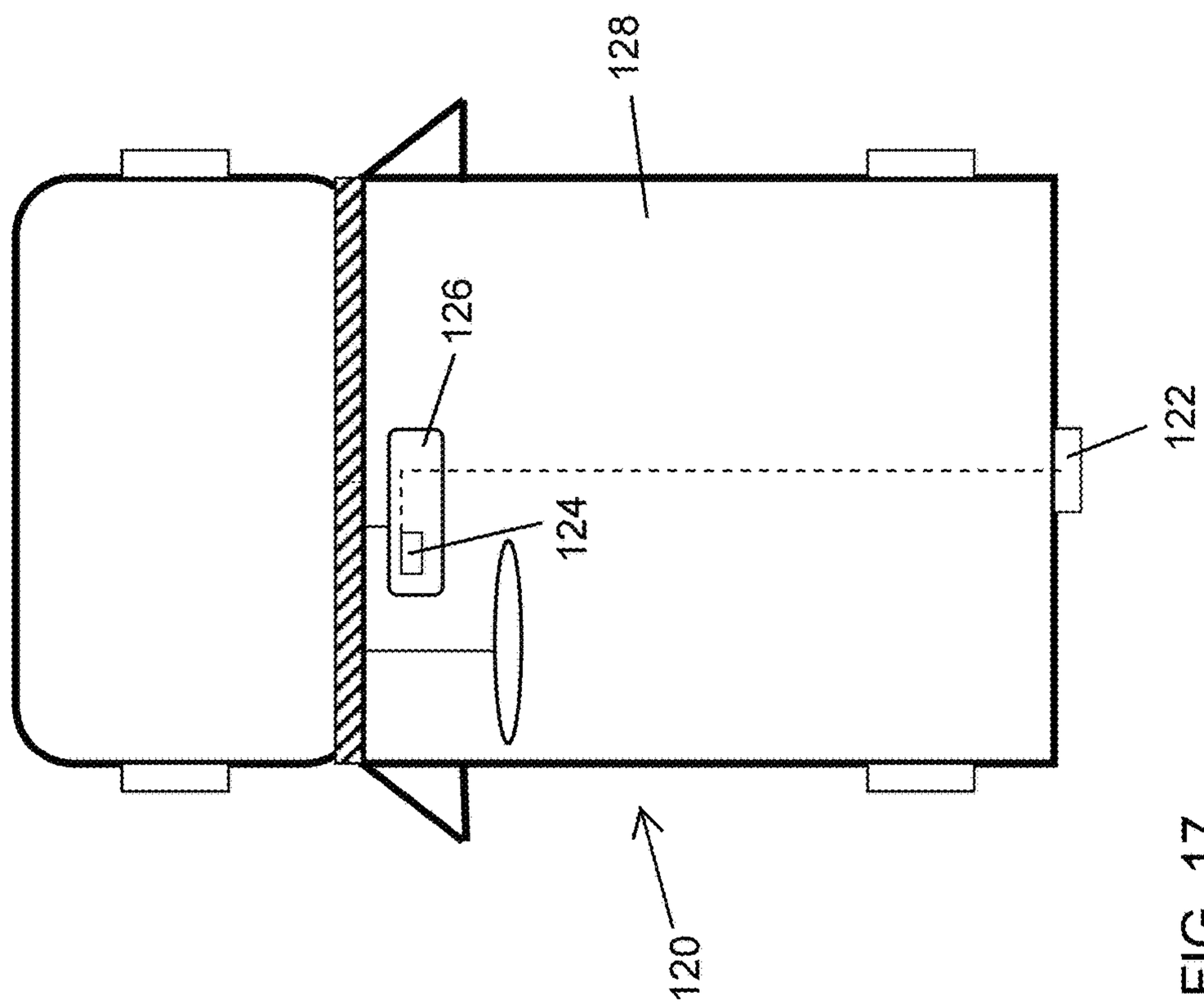

FIG. 17

VEHICULAR VISION SYSTEM WITH REAR BACKUP VIDEO DISPLAY

CROSS REFERENCE TO RELATED APPLICATIONS

The present application is a continuation of U.S. patent application Ser. No. 16/203,965, filed Nov. 29, 2018, now U.S. Pat. No. 10,336,255, which is a continuation of U.S. patent application Ser. No. 15/675,920, filed Aug. 14, 2017, now U.S. Pat. No. 10,144,352, which is a continuation of U.S. patent application Ser. No. 15/460,666, filed Mar. 16, 2017, now U.S. Pat. No. 9,731,653, which is a continuation of U.S. patent application Ser. No. 15/295,057, filed Oct. 17, 2016, now U.S. Pat. No. 9,598,014, which is a continuation of U.S. patent application Ser. No. 15/042,664, filed Feb. 12, 2016, now U.S. Pat. No. 9,469,250, which is a continuation of U.S. patent application Ser. No. 13/333,337, filed Dec. 21, 2011, now U.S. Pat. No. 9,264,672, which claims the filing benefits of U.S. provisional applications, Ser. No. 61/466,138, filed Mar. 22, 2011, Ser. No. 61/452,816, filed Mar. 15, 2011, and Ser. No. 61/426,328, filed Dec. 22, 2010, which are hereby incorporated herein by reference in their entireties.

FIELD OF THE INVENTION

The present invention relates to vision display systems for vehicles and, more particularly, to a vision display system that selectively displays rearward images captured during a reversing maneuver and display a surround view or bird's-eye view or representation of the vehicle for viewing by the driver of the vehicle when the driver is operating the vehicle.

BACKGROUND OF THE INVENTION

Rear backup cameras and surround vision/panoramic vision systems used in conjunction with interior rearview video mirrors and instrument panel/center console information screens (such as navigation screens) are known for use in vehicles. Examples of such systems are described in U.S. Pat. Nos. 7,859,565; 6,611,202; 6,222,447; 5,949,331; 5,670,935 and/or 5,550,677, which are hereby incorporated herein by reference in their entireties. It is known to display images captured by a rearward viewing imaging sensor or camera on a video display screen that is associated with or incorporated in an interior rearview video mirror assembly of the vehicle. Such interior rearview video mirror display screens typically have about a 3.5 inch or thereabouts diagonal dimension and a 4:3 or 16:9 aspect ratio, while instrument panel/center console screens (commonly used for navigational screens but also used and usable for displaying infotainment information or other information useful to the driver of the vehicle) typically have a larger diagonal dimension, often greater than about 6 inches diagonal dimension (such as 7.8 inches or thereabouts) and are used for likes of displaying map information and/or driving instructions and/or other information relating to vehicle features or functions. The smaller video mirror display screens are located in the interior rearview mirror assembly of the vehicle and thus are typically disposed in the vehicle at a location that is closer to the driver's eyes than other known or typical or conventional in-cabin and driver-viewable display screens, which are often disposed at the instrument panel or a central console or the like of the vehicle. Such instrument panel or a central console displays can be as large as 8.5 inch diagonal dimension (or even larger in some vehicles) whereas, because of the fit and function in the vehicle of the interior rearview mirror assembly, the video screen in an interior video mirror assembly is restricted in size to, in practical terms, a diagonal dimension of up to 4 inches or thereabouts.

It is also known to provide a surround view or "bird's-eye" view display (showing a representation of the vehicle from a top or bird's-eye view above the vehicle to enhance the driver's understanding of the areas surrounding the vehicle for use such as in parking maneuvers and the like) via a surround system vision such as a camera or vision system of the type shown in FIG. **1** (showing a vehicle **10** with a forward viewing camera **12**, side-viewing cameras **14**, **16** disposed at or in the exterior sideview mirror assemblies and a rearward viewing camera **18**). Such a bird's-eye view or image or representation may be displayed on a 3.5 inch diagonal video mirror display and are typically displayed on larger (such as greater than about 5 inches diagonal dimension) display screens, such as larger display screens disposed at a center console or instrument panel of the vehicle, such as for displaying navigation information or infotainment information (such as radio or audio system information) and/or the like. In such conventional bird's-eye view displays, it is common and desirable, when executing a reversing maneuver, to display to the driver both the actual video images captured in real time by the rear backup camera of the equipped vehicle, and also to display to the driver a bird's-eye composite or synthetic view (sometimes called a top-down view) where the video images captured by the rear camera are combined with video images captured by a forward viewing camera, typically at the grille at the front of the vehicle, and by two exterior mirror-located cameras mounted respectively in the exterior sideview mirrors and having a field of view to the respective side of the vehicle. Examples of bird's eye view systems and associated techniques are described in U.S. Pat. Nos. 5,670,935; 6,636,258; 7,145,519; 7,161,616; 7,230,640; 7,248,283; 7,295,229; 7,301,466 and/or 7,592,928, and/or International Publication No. WO 2010/099416, published Sep. 2, 2010, and/or PCT Application No. PCT/US10/47256, filed Aug. 31, 2010, which are hereby incorporated herein by reference in their entireties. Conventionally, the bird's-eye view and view of the rearward images being captured by the rear-mounted camera as part of a rear backup aid are displayed on a single display screen, typically a center console display screen.

Recently, the Department of Transportation, National Highway Traffic Safety Administration (NHTSA) has issued a Notice of Proposed new Rule Making (NPRM). The caption of the NPRM is shown in FIG. **2** and aspects of the proposed Final Rule are summarized/captured in FIGS. **3**-**5**. The NPRM was printed in the Federal Register: Dec. 7, 2010 (Vol. 75, No. 234), pages 76185-76250; Part IV, Department of Transportation, National Highway Traffic Safety Administration, 49 CFR Parts 571 and 585 [Docket No.: NHTSA-2010-0162], RIN 2127-AK43, and titled *Federal Motor Vehicle Safety Standard, Rearview Mirrors; Federal Motor Vehicle Safety Standard, Low-Speed Vehicles Phase-In Reporting Requirements; Proposed Rule*, the entirety of which is hereby incorporated herein by reference. The NPRM at S6.2.1.1 requires and specifies a rearview image performance such that, when tested in accordance with the procedures in S14.1 through S14.2.3 of the NPRM, the rearview image shall display, in a location visible to a driver properly restrained by seat belts, a minimum of a 150 mm wide portion of each test object located at positions F and G in FIG. **5**. Also, and in accordance with S6.2.1.2 of the NPRM, when the rearview image is measured in accordance

with the procedures in S14.1 through S14.2.3 of the NPRM, (a) the calculated visual angle subtended by the horizontal width of the three test objects located at positions A, B, and C in FIG. **5** shall average not less than 5 minutes of arc; and (b) the angular size of each individual test object (A, B, and C) shall not be less than 3 minutes of arc.

As can be seen with reference to FIG. **7**, in order to have a displayed object subtend a minimum of 5 minutes of arc angle, the display size of the target object (dependent on the distance of the displayed object from the driver's eyes) shown on the screen should be around 0.5 mm to 2 mm or thereabouts where the distance from the eyes of the viewer to the screen is between about 15 inches and about 50 inches.

SUMMARY OF THE INVENTION

The present invention provides a vision display system for a vehicle that utilizes a video mirror display screen to display rearward images captured by a rearward viewing camera of the vehicle at an interior rearview video mirror assembly during a reversing maneuver of the vehicle and that utilizes a separate larger center console or instrument panel display screen of the vehicle (such as a reconfigurable liquid crystal display (LCD) or organic light emitting diode (OLED) screen that may typically or commonly be used for displaying navigation information or infotainment information or other information) to display a surround view or bird's-eye view or representation of the vehicle at the navigation screen during the reversing maneuver of the vehicle.

According to an aspect of the present invention, a vision display system for a vehicle includes a plurality of cameras disposed at the vehicle and having exterior fields of view, with the plurality of cameras at least comprising a rearward viewing camera disposed at the rear of the vehicle, a forward viewing camera disposed at the front of the vehicle, a driver-side viewing camera and a passenger-side viewing camera (with the driver-side viewing camera and the passenger-side viewing camera preferably incorporated into the driver-side exterior sideview mirror assembly and the passenger-side exterior sideview mirror assembly, respectively). The vision display system includes a first display screen disposed, preferably, in an interior rearview video mirror assembly of the vehicle (such as behind the mirror reflective element so that information displayed by the first display screen is viewable through the reflective element of the interior rearview video mirror assembly, and preferably is viewable through the mirror reflector of the reflective element of the interior rearview mirror assembly). The first display screen has a first diagonal dimension and a first aspect ratio. The vision display system includes a second display screen disposed in the vehicle cabin other than in the interior rearview mirror assembly of the vehicle and at a location viewable by the driver when normally operating the equipped vehicle, such as at or in a console or instrument panel of the vehicle, with the second display screen having a second diagonal dimension and a second aspect ratio, and with the second diagonal dimension being greater than the first diagonal dimension. The first display screen is operable to display video images captured by the rearward viewing camera during a reversing maneuver of the vehicle and the second display screen (during that reversing maneuver) displays a surround view, panoramic, bird's-eye view or top view image formed as a composite image derived from and synthesized from image data captured by the rearward, forward, driver side and passenger side viewing cameras during that reversing maneuver of the vehicle.

The first display screen preferably comprises a video display screen in the interior rearview mirror assembly disposed behind the mirror reflective element (and most preferably disposed behind, and rendered covert thereby when not backlit, a transflective mirror reflector of the mirror reflective element), such as a backlit liquid crystal display screen or backlit thin film transistor (TFT) liquid crystal display screen (backlit by a plurality of light emitting diodes or the like), such as a display screen of the types described in U.S. Pat. Nos. 6,690,268; 7,184,190; 7,274,501; 7,370,983; 7,446,650 and/or 7,855,755, and/or U.S. patent application Ser. No. 10/538,724, filed Jun. 13, 2005 and published Mar. 9, 2006 as U.S. Publication No. US-2006-0050018, which are all hereby incorporated herein by reference in their entireties. The first display screen may be operable to display rearward images responsive to the driver of the vehicle shifting to a reverse gear of the vehicle during reversing of the vehicle, such as is disclosed in U.S. patent application Ser. No. 13/285,128, filed Oct. 31, 2011, now U.S. Pat. No. 8,743,203, which is hereby incorporated herein by reference in its entirety.

The second display screen may comprise a larger display screen (such as a display screen having a diagonal dimension of at least about 5 inches or at least about 7 inches or thereabouts). The second display screen may also function to display navigation information and/or infotainment information and/or other information for viewing and use by the driver of the vehicle when the driver is operating the vehicle other than when executing a reversing maneuver.

Should the driver dwell in reverse gear for a prolonged period of time, the display luminance of at least the first display screen may reduce to mitigate/reduce heat build-up due to prolonged backlighting but is controlled such that, at high ambient lighting conditions such as encountered on a sunny day, a display luminance at least of the first display screen of greater or equal than 500 candelas/square meter is preserved.

These and other objects, advantages, purposes and features of the present invention will become apparent upon review of the following specification in conjunction with the drawings.

BRIEF DESCRIPTION OF THE DRAWINGS

FIG. **1** is a plan view of a vehicle with a surround vision display system and multiple cameras with exterior fields of view;

FIG. **2** identifies the NPRM that is summarized in FIGS. **3-5** and that requires minimum display size of targets in images captured by a vehicular camera;

FIG. **6** is a view of the rear of a vehicle with target objects rearward of the vehicle in accordance with the test standards of FIGS. **2-5**;

FIG. **7** is an image as captured by the rearward viewing camera of the vehicle of FIG. **6**;

FIG. **8** is a table that lists the minimum width of a test object as displayed on a display screen for display screens at different distances from the driver's eyes, in order to provide a displayed size that subtends a minimum of 5 minutes of arc angle, in order to meet the test standards summarized in FIGS. **3-5**;

FIG. **9** is a rearward video image as captured by a rearward viewing camera of a vehicle as displayed on a video screen for viewing by the driver of the vehicle during a reversing maneuver;

FIG. **10** is a surround view or bird's-eye view image as displayed adjacent to the rearward video image of FIG. **9**;

FIG. **11** is a comparison of the size of the rearward video image of FIG. **9** and the reduced size rearward video image of FIG. **10**, which is reduced to accommodate the bird's-eye view image at the display screen;

FIG. **12** is a schematic of a vision display system in accordance with the present invention, showing a smaller display screen in an interior rearview mirror assembly for displaying rear backup assist images during a reversing maneuver and a larger display screen at an instrument panel or center console for displaying the surround view or bird's-eye view image;

FIG. **13** is a schematic of the vision display system of FIG. **12**, showing an exemplary displayed image captured by a rearward viewing camera at the video mirror display and a displayed bird's-eye view representation of the vehicle at a larger display screen at the instrument panel or console of the vehicle;

FIG. **14** is a sectional view of a double ball mounting arrangement suitable for mounting an interior rearview video mirror assembly of the present invention at an in-cabin surface of a windshield of the equipped vehicle;

FIG. **15** is a graph of the times for starting components of a video display system following a trigger event, in accordance with the present invention;

FIG. **16** is a table showing aspects of a video display system and backup assist system of the present invention; and

FIG. **17** is a schematic of another vision display system in accordance with the present invention.

DESCRIPTION OF THE PREFERRED EMBODIMENTS

The present invention provides a surround vision display system that is operable to display, such as during a reversing maneuver of the vehicle, rearward video images at a video display screen disposed at or in an interior rearview mirror assembly of the vehicle, and is operable to display surround view or bird's-eye view or panoramic-view images or representations at a display screen disposed at or in an instrument panel or center console or the like of the vehicle. The rearward video images are captured by a rearward viewing camera of the vehicle, while the surround view display information is based on image data captured by multiple cameras disposed at the vehicle with exterior fields of view, these multiple cameras typically including the rearward viewing camera of the vehicle (that functions as a rear backup camera when reversing the equipped vehicle). The present invention thus may provide, for example, a 3.5 inch or thereabouts diagonal interior rearview video mirror display (or other size video display at or in the mirror assembly) and a 7.8 inch or thereabouts diagonal display screen (or other size display screen that may typically be used with a navigational and/or infotainment system of the vehicle to display likes map images and driving instructions as part of a vehicle-based navigation system or infotainment systems or the like).

As can be seen with reference to FIG. **9**, captured video images **22** (as captured by a rearward viewing camera of the vehicle during a reversing maneuver) may be displayed on a video display screen **20** during a reversing maneuver. Because the full dimensions of the video-active region of the video screen used in the video mirror assembly is substantially or fully filled by the rearview image captured by the rear backup camera, and given that such video mirror screens typically have about a 3.5 inches or thereabouts diagonal dimension and have a width to height (as mounted in the interior rearview mirror assembly) aspect ratio typically of likes of about 4:3 or about 16:9, or thereabouts, the image of the likes of targets A, B and C as located and shown in FIG. **5** may be sized large enough on the video display screen to satisfy the regulation standards for a typical distance of the mirror reflective element and video display screen from a typical driver's eyes when the video mirror assembly is normally mounted in the vehicle and when a typical driver is normally operating the vehicle (this distance is about 24 to 28 inches or thereabouts in many vehicles).

However, and as shown in FIG. **10**, when some or a substantial amount of the video-active area of video display screen **20** is used for the bird's-eye or panoramic or top-down view or effect **24** to be displayed along with the rearview image captured by the rear backup camera of the equipped vehicle on the same video screen, the video-active display area available for and used for the rearward image display **22'** captured by the rear backup camera of the equipped vehicle is correspondingly reduced, and hence the size of the rearward images (as captured by the rear camera) displayed are correspondingly reduced in size. In such a scenario, and of course depending on the size dimensions of the actual video screen used and coupled with its distance in the vehicle cabin from the driver's eyes), the size dimensions of the likes of targets A, B and C of FIG. **5** may fail to meet the NPRM's S6.2.1.2 size requirement that, when the rearview image is measured in accordance with the procedures in S14.1 through S14.2.3 of the NPRM, (a) the calculated visual angle subtended by the horizontal width of the three test objects located at positions A, B and C in FIG. **5** shall average not less than 5 minutes of arc, and (b) the angular size of each individual test object (A, B and C) shall not be less than 3 minutes of arc.

This can readily be seen with reference to FIG. **11**, which shows the two display schemes as displayed on an exemplary display. As can be seen in FIG. **11**, the displayed rearward image **22** is displayed as a larger image when it is the only image displayed on the display screen, but the displayed rearward image **22'** is displayed as a smaller or reduced size image when it is displayed in tandem with the bird's-eye view representation or schematic **24**. Thus, the bird's-eye view effectively reduces the effective screen size for displaying rearward images captured by the rear backup camera during a reversing maneuver of the vehicle. Depending on the distance of the mirror assembly and video display screen from the driver's eyes, the reduced size of the rearward image display may result in the displayed rearward images not meeting the size requirements set forth in the proposed Federal Safety Regulations of FIGS. **2-5**.

Thus, in such circumstances (where a bird's-eye view is displayed for viewing by the driver of the vehicle on the one screen along with displaying of rearward images captured by the rear backup camera during a reversing maneuver of the vehicle), the bird's-eye view may cause the overall rear backup aid system to run afoul of the minimum size requirements of the displayed images required in the NPRM, such that a larger screen may be required to display the images. Such larger video display screens may be overly costly and may adversely affect the vehicle styling and manufacturer's preferences (since the oversized/larger video display screens may require a larger console space or instrumentation panel space or radio-head space that might be readily/normally available in the equipped vehicle). The present invention resolves such a problem by providing a dual display system that utilizes two separate display screens. One display (typically the larger display) is dedicated, during a reversing maneuver, solely to the composite or synthetic bird's eye or

panoramic or top down surround view computer-generated display derived from the multiple video images captured by the multiple set of cameras that constitute the multi-camera surround view system on the equipped vehicle (this display preferably is located at the front console region or at the instrument panel region or in the radio-head region at the front of the interior cabin of the equipped vehicle and is viewable by the driver of the vehicle when reversing, though of course other in-cabin locations can be contemplated). The other separate display (typically the smaller display) solely displays the rearward images captured by the rear backup camera (or rear backup cameras if used) of the equipped vehicle, and preferably, so displays the images full-screen so that the full display area available is filled with the rearward images captured by the rear backup camera(s), and more preferably, with this other display comprising a video screen of an interior rearview video mirror of the equipped vehicle mounted such as at the upper windshield area of the equipped vehicle. The one and the other display are preferably separately located and are distant one from another in the cabin of the equipped vehicle in order to enhance the driver's usage and cognitive appreciation/benefit from the overall system.

For example, and as shown in FIGS. **12** and **13**, the video mirror **26** may use or house a first display screen **20** (such as a display screen having at least a 2.8 inch diagonal dimension, such as about a 3.5 inch diagonal dimension or larger or smaller depending on the mirror assembly and vehicle application) to display video images captured by the rear backup camera during a reversing maneuver, and a second, larger display screen **28** (such as a 7.8 inch diagonal screen or 8.5 inch diagonal screen or the like) may be located at the instrument panel or center console **30** of the vehicle (and located there to provide a display for likes of a navigation system or infotainment system of the vehicle or to display other information for viewing by the driver of the vehicle) to show the bird's-eye or top-down or panoramic view or effect or representation. Optionally, and alternatively, the larger (particularly further from the driver's eyes, such as in the range of about 30 to 40 inches from the driver's eyes or more or less) console or instrument panel display **28** may be used to show the rear image **22** for a backup assist function, while the bird's eye view **24** may be provided in the video mirror display **20**. However, this configuration is less preferred because it is desirable to have the rearward image (captured by the rearward-viewing camera) displayed at the interior rearview mirror assembly during a reversing maneuver, since the driver of a reversing vehicle may typically view the interior rearview mirror assembly (and thus the video mirror display that is displaying the backup assist images) during the reversing maneuver of the vehicle. Advantageously and preferably, and in conjunction with an image processing-based system (such as via use of an EYEQ™ image processor available from Mobil-Eye of Jerusalem, Israel), a machine-vision generated alert may be generated and displayed at the interior rearview mirror assembly (and preferably superimposed upon the displayed rearview image captured by the backup camera) to alert the driver to pay closer attention to what may be rearward of the equipped vehicle during the reversing maneuver, and such as by utilizing aspects of the systems described in International Publication No. WO 2010/099416, published Sep. 2, 2010, which is hereby incorporated herein by reference in its entirety. Optionally, the bird's eye view vision system and display may utilize aspects of the vision systems described in U.S. Pat. Nos. 5,670,935; 6,636,258; 7,145,519; 7,161,616; 7,230,640; 7,248,283; 7,295,229; 7,301,466 and/or 7,592,928, and/or International Publication No. WO 2010/099416, published Sep. 2, 2010, and/or PCT Application No. PCT/US10/47256, filed Aug. 31, 2010, and/or PCT Application No. PCT/US10/25545, filed Feb. 26, 2010 and published Sep. 2, 2010 as International Publication No. WO 2010/099416, and/or U.S. provisional applications, Ser. No. 61/570,017, filed Dec. 13, 2011; Ser. No. 61/568,791, filed Dec. 9, 2011; Ser. No. 61/559,970, filed Nov. 15, 2011; and/or Ser. No. 61/540,256, filed Sep. 28, 2011, which are hereby incorporated herein by reference in their entireties.

The two-display vision display system of the present invention thus provides enhanced viewing and viewability of rearward captured images from a rear backup camera displayed on the other display (preferably a video mirror display) during a reversing maneuver when a bird's-eye view or representation is also provided and displayed on the separate, distinct, different and distant one display (preferably a console display or an instrument panel display or a radio head display) via a multi-camera surround system (and preferably with the rear backup camera being one of the cameras used in the multi-camera system in the computer-generation of the composite or synthetic views shown on the dedicated one display when the other display is showing, full-screen, the video output of the rear backup camera of the equipped vehicle). The vision display system may operate to display the rearward images at the video mirror display and the bird's-eye or top down or panoramic images/view at the navigation or infotainment screen, and may do so responsive to the driver of the vehicle shifting the vehicle into a reverse gear (such as by utilizing aspects of the vision systems described in U.S. Pat. Nos. 5,550,677; 5,670,935; 6,498,620; 6,222,447 and/or 5,949,331, and/or PCT Application No. PCT/US2011/056295, filed Oct. 14, 2011 and published Apr. 19, 2012 as International Publication No. WO 2012/051500, which are hereby incorporated herein by reference in their entireties).

By solely during a reversing maneuver providing the rear backup camera images at the video mirror display (without the bird's-eye or top down or panoramic view or effect), the displayed rearward images may encompass the entire video mirror display screen and thus image size of an object as displayed may not be reduced by the inclusion of a bird's-eye or top down or panoramic view feature. The bird's-eye or top down or panoramic view or feature may be solely displayed at the larger navigational screen or infotainment screen or other display screen that is included in the vehicle such as part of a navigational or informational system of the vehicle. The rear backup images captured by the rear backup camera during a reversing maneuver preferably are displayed, full-screen, by the video screen of an interior rearview mirror assembly of the equipped vehicle. The present invention thus may meet the NPRM regulation proposed requirements while providing freedom of design to the vehicle manufacturer.

Optionally, the display system of the present invention may combine three dimensional (3D) image data or images and auxiliary graphical data, preferably such as by utilizing aspects of the systems described in U.S. patent application Ser. No. 13/201,736, filed Feb. 9, 2010 by Newton et al., and published Dec. 15, 2011 as U.S. Publication No. 20110304691, which is hereby incorporated herein by reference in its entirety. The 3D and auxiliary graphical data are combined for rendering on a 3D display, such as by detecting depth values occurring in the 3D image data, and setting auxiliary depth values for the auxiliary graphical data adaptively independent of the detected depth values. Image data

captured by individual cameras of a multi-camera system in accordance with the present invention may convey image data to a central electronic control unit of the vehicle via the likes of an Ethernet connection/bus or an LVDS connection/bus.

Note that when a reversing maneuver is not being executed, then the bird's-eye or top down or panoramic view or feature may be displayed at the larger navigational screen or infotainment screen or other display screen in tandem with for example, the forward video view captured by the forward-viewing front camera of the multi-camera surround system. In such a circumstance and when a reverse maneuver is not occurring, the likes of a backlit TFT LCD reconfigurable video mirror screen may not be backlit (and so does not display information) or may display the likes of a compass heading. Of course, during any reversing maneuver, the system of the present invention complies with S6.2.1.3 (Response Time) of the NPRM in that the rearview image from the rear backup camera meeting the requirements of S6.2.1 through 6.2.1.6 as displayed full-screen on the likes of the video screen of an interior rearview video mirror assembly of the equipped vehicle (and with the surround view feature displaying on a separate display such as a larger navigational screen or infotainment screen or other screen) displays the rear backup camera-captured within 2.0 seconds of the time at which the vehicle transmission is shifted into reverse gear. Also, in accordance with S6.2.1.4 (Linger Time) of the NPRM, the rearview image is not displayed by the likes of the video screen of the interior rearview video mirror for more than 10.0 seconds after the vehicle transmission has been shifted out of reverse gear (and such as in accordance with the vision systems described in U.S. patent application Ser. No. 13/285,128, filed Oct. 31, 2011, now U.S. Pat. No. 8,743,203, which is hereby incorporated herein by reference in its entirety). Also, and in accordance with S6.2.1.5 (Deactivation) of the NPRM, the rearview image as captured by the rearview backup camera used in the visual display system of the present invention is not extinguishable by any driver-controlled means, and in accordance with S6.2.1.6 (Display Luminance) of the NPRM, and when tested in accordance with S14.2 of the NPRM, the luminance of the interior visual display used to present the rearview image shall not be less than 500 candelas/square meter.

As described in U.S. patent application Ser. No. 13/285,128, filed Oct. 31, 2011, now U.S. Pat. No. 8,743,203, incorporated above, a rear vision system for a vehicle includes a rear backup video camera and a display device. A control activates display of captured video images by the display device when a transmission of the vehicle is shifted into reverse gear and deactivates display of the video images upon shifting of the vehicle transmission out of reverse gear once a threshold deactivation condition is met. The threshold deactivation condition is at least one of (a) forward travel of the vehicle exceeding a threshold speed of forward movement after the vehicle transmission has been shifted out of reverse gear, (b) forward travel of the vehicle exceeding a threshold distance of forward movement after the vehicle transmission has been shifted out of reverse gear and (c) a threshold period of time elapsing after the vehicle transmission has been shifted out of reverse gear, the threshold period of time constituting a linger time. When the reverse gear is engaged, the driver may view on the video screen the reversing image fed from a rear-mounted reversing or trailer-hitch camera or other rear vision system or back up aid or the like until the likes of a time has elapsed (such as about 5 seconds or about 10 seconds or thereabouts) since the reverse gear was first engaged and/or until the vehicle has driven forward a certain distance (such as about 10 feet or about 20 feet or about 30 feet or thereabouts) and/or until the vehicle's forward speed exceeds a threshold forward speed (such as about 3 miles per hour (mph) or about 5 mph or about 7 mph or about 10 mph or thereabouts). The screen may also be pivoted (such as about a generally vertical pivot axis) so as to be angled or canted toward the driver of the vehicle to enhance viewing of the reversing image at the video screen by the driver of the vehicle until a threshold forward speed or forward traveled distance is reached by the vehicle or a threshold time has elapsed after shifting the vehicle out of reverse, such as described above. Optionally, the video display screen may be fixedly attached so as to be readily viewable by the driver of the vehicle, and may be utilized for various applications, such as a backup aid (whereby the video screen may be automatically activated when the vehicle is shifted into reverse) or a navigation screen or cabin monitor or the like.

Thus, to comply with section S6.2.1.5 (Deactivation) of the NPRM that requires that the rearview image shall not be extinguishable by any driver-controlled means, and to comply with section S6.2.1.6 (Display Luminance) of the NPRM requires that, when tested in accordance with S14.2 of the NPRM, the luminance of an interior visual display used to present the rearview image shall not be less than 500 candelas per square meter (in high ambient lighting conditions), the video mirror displays of the present invention, when viewed through the transflective mirror reflector of the preferred video mirror reflective element during the daytime operation in an equipped vehicle, are operable and operate far in excess of a display luminance of 500 candelas per square meter, with display luminance of at least about 1,000 candelas per square meter, more preferably at least about 1,500 candelas per square meter, and more preferably at least about 2,000 candelas per square meter in preferred video mirror assemblies.

However, in the event that the driver engages the reverse gear (with the ignition running) and dwells in reverse for a prolonged period of time (such as for example, greater than at least about two minutes or greater than at least about fifteen minutes or greater than at least about forty minutes or longer), a control of the vehicle (preferably a control associated with and most preferably part of the interior rearview video mirror assembly), sensing that reverse has been engaged for a period longer than a predetermined or threshold prolonged period, progressively and/or in one step reduces via photo sensor control the maximum display luminance from its normal maximum display luminance level to a display luminance level close to but never less than 500 candelas per square meter. Thus, to take an example for illustration, on a sunny day, when ambient lighting at or about the interior rearview video mirror is high (such as, for example, greater than about 100,000 lux or greater than about 250,000 lux), the display luminance of the video mirror display of the present invention may be at around 1,500 candelas per square meter or greater, but if reverse gear is engaged for longer than, for example, three minutes, then the intensity of the backlighting of the video display screen is progressively reduced by a control of the interior rearview video mirror to, for example, around 600 candelas per square meter, but controls to ensure that, at ambient light conditions such as are called out S6.2.1.6 (Display Luminance) of the NPRM, the display luminance is controlled to be at least 500 candelas per square meter and no lower. By so doing, overheating of the interior rearview video mirror

is mitigated or reduced or avoided, while preserving and complying with the proposed S6.2.1.6 Display Luminance requirement.

Of course, when ambient light falls or changes or is at a light level below that experienced on a sunny summer day, and preferably when the control is responsive to a photosensor or photosensors located at the interior rearview video mirror assembly itself, the displayed intensity or display luminance can be correspondingly reduced down to a nighttime driving or low ambient lighting condition display luminance of, for example, about 150 candelas per square meter or lower to, for example, a display luminance of around 100 candelas per square meter or even lower. Such reduction in display luminance as the ambient light (such as detected by one or more photo sensors disposed at the mirror assembly) at the interior rearview video mirror assembly decreases can be continuous or, such as via microprocessor control, can be stepped (for example, we find it useful to vary from the highest display luminance to the lowest display luminance in around 100 steps).

Studies have shown that rear backup accidents/incidents can occur at home driveways and/or public parking areas, where the driver enters the vehicle, turns on the ignition of the vehicle, and immediately or fairly immediately (such as within about one to two seconds or thereabouts of starting the engine) commences a reversing maneuver by shifting to a reverse gear of the vehicle and pressing the accelerator. Thus, with a camera-based backup vision system, the desire and need that a driver-appreciable and driver-usable video image be made available for viewing by the driver preferably within about three seconds of initial ignition on/engine startup (i.e., when the driver turns a key or pushes a button to start the vehicle engine), more preferably within about two seconds of initial ignition on/engine startup and most preferably within about one second of initial ignition on/engine startup. Note that while many drivers turn the ignition on simultaneously with starting the engine, initial ignition on can be achieved without turning on the engine, such as by turning the key in a different direction (or turning the key in the same direction but not all the way to the engine start position) without starting the engine and with electrical power provided to components and/or circuitry and/or accessories of the still parked vehicle without starting the engine. Thus, the term "initial ignition on" as used herein encompasses the initial turning on of electricity to otherwise unpowered circuitry and/or components and/or accessories in a parked vehicle when a person, typically the driver of the vehicle, first enters or approaches the vehicle (and can encompass the likes of remote starters or such devices). Because, having initially turned on the engine via the vehicle ignition, the driver may shift the vehicle transmission to reverse (such as by moving the gear actuator to the "R" position) and initiate rearward movement within about three seconds (or within about two seconds or within about one second), it is preferable and desirable that the video images (captured by the rearward facing or rearward viewing backup camera at the rear of the vehicle) be made available for driver viewing within the prescribed time of around 0-3 seconds or thereabouts maximum. Also, although the likes of children are unlikely to be playing in a driveway and the like at very cold temperatures, such as temperatures as low as about −20 or −40 degrees C., it is desirable that the video images be made available within the prescribed time even in such cold weather conditions.

Rear backup systems involve a rear mounted camera (such as a rearward facing or rearward viewing CMOS camera or imager or CCD camera or imager or the like), typically a NTSC camera or other standard protocol camera or a digital camera, and a video display device or unit or module (that typically comprises a video display screen, most commonly a backlit reconfigurable liquid crystal display screen, and associated circuitry including video decoders and other associated video display circuitry and/or the like). Upon initial ignition on of the vehicle and initial electrical powering of the components of the display system, there can be a time delay for components/circuitry during which the component/circuitry is activated and warms up before it is functioning in its normal manner. Also, time may be needed to upload algorithms/logic from the likes of ROM/memory during this initial initiation period. For example, and with reference to FIG. **15**, almost immediately (within about 150 milliseconds) upon ignition on (i.e., typically when the driver turns on the engine), electricity is at least provided to the rear camera and the video display device, and such rear cameras can typically take from around about 500 milliseconds to around 1.5 seconds (shown in FIG. **15** as about 800 milliseconds following ignition on) to be ready to provide a valid video signal as an output on a video cable or other link to the video display screen (typically at the interior rearview mirror of the vehicle or at the instrument panel or an overhead console of the vehicle). Thus, initiation or boot-up of the video display device can be and preferably is initiated and electricity is supplied thereto immediately upon initial ignition on, and preferably initiation or boot-up of the rearward viewing camera can be and preferably is initiated and electricity is supplied thereto immediately upon initial ignition on. Thus, preferably, initiation/boot-up of the video display device can occur simultaneously with and in parallel with the initiation/boot-up of the rearward viewing camera and such initiation/boot-up does not occur serially or partially serially.

Video display screens of such video display devices are typically liquid crystal video displays that, particularly at low temperatures, such as below about −20 degrees C. or thereabouts, may be sluggish to operate, so that the video display device is not initially responsive enough or fast enough to keep up with the image frame rate provided by the camera device. In other words, the driver may not see a proper or quality or usable video image of the rear blind zone being viewed by the rearward viewing camera during its initial/initiating period. Also, the video display device or module typically includes the likes of video encoders/decoders and other ancillary circuitry, microprocessors, backlighting (such as an array of light emitting diodes or the like) and/or the like, which may require and may consume some time to activate and boot-up before they operate in their normal or full operating state/mode. As shown in FIG. **15**, the vision or display system of the present invention may delay turning on the backlight of a backlit liquid crystal video display screen of a video display device for a period of time (such as, for example, about 1.2 seconds or thereabouts) following the ignition on/engine startup event so that the video display will be assuredly ready to display the video images captured by the rearward viewing camera (but this delay may be longer and may be as long as about 1.5 seconds or thereabouts, depending on when a camera ready or "valid" signal state is achieved by the display system). Thus, an OEM can choose from a variety of rear cameras, some of which may be faster to initiate than others, with confidence that as long as initiation/boot-up by the selected camera is no longer than the prescribed time period (for example around 1.2 seconds or thereabouts), the driver will not view poor quality/inadequate video images during the initiation period.

The vehicle and its controls, including any controls or circuitry at the camera or video display unit or device or module, are capable of distinguishing a first ignition condition (when the driver of the vehicle first turns the key or pushes a button or the like to start the vehicle's engine) and thus the camera and/or the video module can be controlled to operate different in such a first ignition condition than in subsequent conditions or times during the driving period following the first ignition of the vehicle.

Thus, at the exact instant or thereabouts that a "first ignition" is detected, the display system preferably simultaneously and in parallel activates/initiates and boots-up the rearward viewing backup camera and the video mirror display device. The display system of the present invention preferably processes signals to determine the earliest valid video signal from the rearward viewing camera and the microsecond (or at least substantially quickly or substantially simultaneously) that the valid video signal is determined, the system activates the video display device to turn on the likes of backlighting of the video screen to display images at the video display screen. It may be undesirable to activate the video display unit until such valid video images are determined and available, because if the video screen is on while no video images are received from the camera, the display may appear to the driver of the vehicle as not functioning properly. Thus, the present invention operates to turn on the video display device quickly and almost immediately following the first ignition, but delays operating the video display device to backlight the video screen preferably until valid video images are available for display, such that the video display device is operated to display images only when (and substantially simultaneously to when) valid video images are received from the rearward viewing camera. For example, and as shown in FIG. **15**, the system may delay activating the backlighting of the video display device or unit or module for about 1.2 seconds following the initial ignition on or triggering event, and may delay this further if no valid video signal is received by that time from the rearward viewing video camera.

Optionally, when commencing a reversing maneuver, the vehicle display may provide an alert or warning at the display screen (such as "Check Behind the Vehicle Before Backing Up" or the like). Such warnings are typically provided when the vehicle transmission is initially shifted into reverse gear. It is envisioned that such warnings or alerts should only be provided during the brief initiation period and quickly removed or canceled as soon as the rearward images are available for viewing at the display device.

Also, video display devices or units or modules may have and typically do have at least one and often two thermal sensors or thermistors on board. Thus, the video display devices or units or modules are capable of sensing the ambient environment in which they are disposed. Thus, if very cold temperatures are sensed (such as, for example, about −40 degrees C.), the display system may optionally operate or function to enhance or speed up the operation of the video display device (such as via a higher energy boost at startup or via heating of the video display prior to activation or the like).

Optionally, and with reference to FIG. **16**, an interior rearview mirror system may comprise a video mirror with a video display device operable to display video images during a reversing maneuver in accordance with the present invention. The mirror assembly may include a rearward facing or rearward viewing sensor for sensing light through the mirror reflective element for video display dimming functions and electrochromic mirror dimming functions. The mirror system includes circuitry and thermal algorithms for providing enhanced or fail safe liquid crystal display module operation. Optionally, the mirror system may include electrochromic exterior mirror assemblies and an electrochromic interior mirror assembly.

The rearward viewing camera may be powered via any suitable power supply at the vehicle. For example, the camera power may be provided from the video mirror itself (such as at about 6.6 volts nominal and at about 200 mA maximum).

Optionally, the mirror assembly may include a user input or switch that enables and/or disables the EC dimming function and the video display function. The mirror button or user input function may, when the ignition is on, control the EC dimming function (on/off) when the vehicle is not in reverse and control the video display function (on/off) when the vehicle is in reverse and during a reversing maneuver.

Optionally, the mirror assembly may include an EC/video indicator (such as a light emitting diode or the like), which functions to indicate to the driver of the vehicle the status of the EC dimming function and/or the video display function. Optionally, the indicator may operate at full intensity only during daytime lighting conditions and may operate at a reduced intensity in lower lighting conditions, such as nighttime lighting conditions or the like. The indicator may be activated when the EC dimming function is on and deactivated when the EC dimming function is off, and optionally the indicator may flash to indicate that the video display is activated or deactivated (such as when the video display is deactivated during a reversing maneuver of the vehicle).

During operation of the display system, and responsive to the driver of the vehicle shifting the vehicle into reverse, the display system of the present invention may activate or power the rearward viewing camera within about 100 milliseconds to about 200 milliseconds following the shifting into reverse. The rearward viewing camera may be powered throughout the reversing maneuver and optionally may be un-powered about 60 seconds after the driver of the vehicle shifts the vehicle out of reverse (after completion of the reversing maneuver), so that the camera power stays on for a period of time after shifting out of reverse so as to provide for a quicker response time if the vehicle is again shifted into reverse (such as when the driver of the vehicle may shift in and out of reverse multiple times, such as for the likes of parallel parking). Optionally, the video display unit or module may be enabled at each new ignition cycle, and the state of the video display may be remembered after completion of a reversing maneuver or cycle (for example, if the video display unit is turned on or off, it will remain in its selected state (on or off) until the user input or button is actuated again in a reversing cycle or ignition cycle).

Stop and go operation of vehicles is currently gaining favor for reasons of fuel economy and the like. In a "stop and go" vehicle, the engine turns off whenever the vehicle stops, such as at a traffic light or in traffic or the like, and when, for example, in a manual transmission vehicle, the driver shifts into neutral and the vehicle is stationary, the engine turns off and then restarts again when the driver presses the clutch. However, electrical power is maintained to the components and accessories of the vehicle during these stop and go periods and, thus, the stopping and then restarting of the vehicle will not result in the above prescribed delay in displaying video images due to the activation and boot-up time period of the video display device and rear backup camera. For such vehicles, it is envisioned that the display system of the present invention may recognize when the

engine stop occurs due to traffic stops or the like (where the key is not turned to an "off" position) and the camera may be powered during such stopped periods to provide for a quicker response time when the vehicle engine is restarted and if the vehicle is shifted into reverse at the time of or immediately following engine restart.

Optionally, and desirably, the video display may function to display a stable and valid video image (if the signal from the rearward viewing camera is stable and valid at that time) within between about 500 milliseconds and about 1.5 seconds after the driver shifts the vehicle into the reverse gear. Optionally, but less preferably, the video display may function to display a stable and valid video image (if the signal from the rearward viewing camera is stable and valid at that time) within between about 900 milliseconds and about 2 seconds after the driver shifts the vehicle into the reverse gear, and less preferably within between about 1.5 seconds and about 3 seconds after the driver shifts the vehicle into the reverse gear. The video display device or unit or module may detect (and turn off the display with no flicker) when the video signal is broken, such as when the video plus and/or video minus wire is disconnected. The video display device or unit or module may shut off or deactivate immediately after the reverse signal is removed, or optionally, a delay feature may be provided or selected.

The indicator (such as a light emitting diode or the like) may be operable to indicate to the driver the status of the EC dimming function and/or the video display function. For example, the indicator may be activated when the EC dimming function is activated to indicate to the driver that the EC dimming function is working, and the indicator may flash or otherwise alert the driver that the video display is deactivated during a reversing maneuver (or may provide other alerts to the driver regarding the status of the video display). Optionally, for example, when the vehicle is in reverse and there are no video images provided by, for example, about 1.5 seconds, the display system may operate to deactivate the video display backlight and may flash or blink the indicator (such as at 1 Hz or any suitable rate of flash) or vary the intensity or color of the indicator to indicate to the driver that no video images are available. Optionally, and desirable, the system may enable the video display and display video images immediately when a good camera video signal becomes available or present while the indicator is flashing and while the vehicle is in reverse. The video mirror display illumination may provide illumination at any suitable intensity, such as about 1,500 cd/m^2 or more, as viewed through a transflective mirror reflector of a transflective mirror reflective element, such as by utilizing aspects of the display devices and mirror assemblies described in U.S. Pat. No. 7,855,755, which is hereby incorporated herein by reference in its entirety.

Optionally, the display system of the present invention may delay or lockout user selectable display options or features during an initial reversing maneuver or the like. For example, some vehicles may provide a video zoom feature for use when reversing a vehicle towards a trailer so that the driver can more readily align the trailer hitch of the vehicle with the tongue of the trailer. When video zoom is selected, the rearward viewing camera and/or the video display device zooms and/or focuses and/or crops the field of view or displayed images to show the region immediately behind the vehicle where the ball of the trailer hitch of the vehicle is located, so that the driver can view the ball in the displayed images and thus see the tongue of the trailer in the displayed video images as the vehicle approaches the trailer. Thus, with a tow check function, the rear backup camera changes its view from its normally broad blind zone view to a narrow or focused or zoomed view immediately rearward of the vehicle. Such a tow check function may be selectively actuated by the driver, such as via actuation of a user input, such as a button or switch or the like, immediately prior to or during a reversing maneuver.

Such a "tow check" event is a relatively infrequent event and when occurring, the driver is aware that a tow check should be made and/or is being made and can selectively activate that feature, such as via a user input or button or the like that causes display of the zoomed in view at the video display screen. Optionally, the display system of the present invention may delay activation of such a tow check feature or view until after a period of time following the driver shifting into a reverse gear. For example, the system may prevent shifting into reverse gear and switching to a tow check or zoomed view at the same time, but may allow for first shifting into reverse gear and then delaying switching to the tow check or zoomed view for a threshold or minimum period of time. Thus, for example, a driver may shift the vehicle transmission into reverse gear and may actuate or select the tow check view option (such as via actuating a user input or button or the like) while in reverse gear, but the system will operate to display the normal backup assist view for a minimum time period, such as at least about 3-5 seconds, maybe about 5-10 seconds or more or less, and will not switch to the tow check view or display during that time period, and only after the delay time period has elapsed will the system switch to the selected tow check or zoomed view. When the driver shifts the vehicle out of reverse gear, the tow check view may remain available, with no delay applied if the vehicle is again shifted back into reverse gear (to allow for a driver to make multiple attempts to align the trailer hitch of the vehicle with the tongue of the trailer via shifting the vehicle transmission in and out of reverse gear multiple times). After the vehicle is shifted out of reverse and into a forward gear and the vehicle is driven forwardly (such as for a threshold distance or to or at a threshold speed) or after the vehicle ignition is turned off, the system may be reset so that the delay period is applied for subsequent shifting into reverse gear.

Thus, when a driver initially starts the vehicle and shifts into reverse gear, even if the driver selects or actuates the zoom function at or around the same time as shifting into the reverse gear, the display device will maintain display of the full view or uncropped view of the camera's rearward field of view (typically at least about 130 degrees or at least about 145 degrees or more and up to or greater than around 180 degrees at the rear of the vehicle) for a predetermined period of time during which the displayed field of view cannot be manually or mechanically changed by the driver of the vehicle. Such a delay period (during which the driver cannot override the "normal" or uncropped display of the rearward field of view of the camera) may be a period of time of up to several seconds, such as up to about 5 seconds or more and preferably not more than 10 seconds, depending on the particular application of the display system. Thus, during the delay period, the driver cannot override display of a reasonable field of view rearward of the vehicle during onset of a reversing maneuver. Even if the driver selects the zoom function during the delay period, no change will occur with the displayed images, but upon completion of the delay period, the display device will display the selected zoomed images or cropped images or the like to assist the driver in aligning the vehicle with a trailer.

Optionally, the display system of the present invention may control or delay operation of a navigation display

device or feature immediately after initial engine on and at least initially during a reversing maneuver of the vehicle. Vehicle manufacturers and safety advocates advocate that a navigation system or display should only be programmed by the user when the vehicle is not moving. Such a navigation system and navigation display screen may take up to about 6-10 seconds to initialize. The display system of the present invention may, upon detection of a shifting of the vehicle to reverse gear, give priority to displaying the reversing scene (and delay initialization of the navigation screen for a period of time during which the backup camera images are displayed). Thus, the system overrides the initialization of the navigation display screen and gives priority to display of the backup camera images and thus displays the backup camera video images as quickly as possible at the video display device. After the backup images are being displayed, the initiation of the navigation display device may commence.

An interior rearview mirror assembly, such as an interior rearview video mirror assembly that incorporates a video display screen as discussed above, may be mounted at an in-cabin surface of a windshield of the vehicle via any suitable mounting arrangement, such as, for example, a single ball mounting arrangement or a double ball mounting arrangement or the like. Optionally, the mounting arrangement may comprise a double ball configuration of the type shown in FIG. **14**. The mounting arrangement **50** comprises a "medium ball" bracket having about an eighteen mm ball diameter, and includes an anti-camout integrated cup design. The nubs **52** on the inside of the cups **54** function to bottom-out on the balls or ball members **56** (such as at the inner walls of passageways through the ball members) at maximum travel or maximum pivoting of the balls at the mounting arm. Optionally, the mounting arrangement may have wireways or passageways for routing wires (such as for powering and/or controlling the video screen and/or electrochromic circuitry and/or the like) through the cups, spring and tube **58**.

The interior rearview mirror assembly of the present invention may be mounted at the vehicle via any suitable mounting assembly attached to an interior portion of the vehicle, such as to an in-cabin surface of a vehicle windshield (such as to a mounting button or attachment element adhered to the interior surface of the vehicle windshield). The mirror assembly may be mounted at or attached to an interior portion of the vehicle (such as to a mounting button or the like at an interior surface of the vehicle windshield or the like) via any mounting means, such as a single ball or single pivot mounting arrangement, or a double ball or double pivot mirror mounting arrangement. Examples of double pivot or double ball mounting arrangements are described in U.S. Pat. Nos. 4,646,210 and 6,331,066, which are hereby incorporated herein by reference in their entireties. The mounting assembly may be mounted to a mounting button or attachment element at the vehicle windshield via a breakaway mounting construction, such as by utilizing aspects of the mounting constructions described in U.S. Pat. Nos. 6,774,810; 6,642,851; 6,483,438; 6,366,213; 6,326,900; 6,222,460; 6,172,613; 6,087,953; 5,820,097; 5,377,949; 5,330,149 and/or 5,100,095, which are hereby incorporated herein by reference in their entireties. The mounting assembly may utilize aspects of the mounting assemblies described in U.S. Pat. Nos. 6,318,870; 6,593,565; 6,690,268; 6,540,193; 4,936,533; 5,820,097; 5,100,095; 7,249,860; 6,877,709; 6,329,925; 7,289,037; 7,249,860 and/or 6,483,438, and/or U.S. patent application Ser. No. 11/226,628, filed Sep. 14, 2005 and published Mar. 23, 2006 as U.S. Publication No. US-2006-0061008; and/or Ser. No. 12/912,253, filed Oct. 26, 2010, now U.S. Pat. No. 8,851,690, and/or International Publication No. WO 2010/111173, published Sep. 30, 2010, which are hereby incorporated herein by reference in their entireties). Optionally, the mirror assembly may incorporate a mounting arrangement of the types described in U.S. Pat. Nos. 7,289,037; 7,249,860 and/or 7,448,589, and/or U.S. patent application Ser. No. 10/522,446, filed Jan. 19, 2005 and published Nov. 10, 2005 as U.S. Patent Publication No. 2005-0248168, which are hereby incorporated herein by reference in their entireties.

The video mirror display screen or device may be operable to display images captured by a rearward viewing camera of the vehicle during a reversing maneuver of the vehicle (such as responsive to the vehicle gear actuator being placed in a reverse gear position or the like) to assist the driver in backing up the vehicle, and optionally may be operable to display the compass heading or directional heading character or icon when the vehicle is not undertaking a reversing maneuver, such as when the vehicle is being driven in a forward direction along a road (such as by utilizing aspects of the display system described in PCT Application No. PCT/US2011/056295, filed Oct. 14, 2011 and published Apr. 19, 2012 as International Publication No. WO 2012/051500, which is hereby incorporated herein by reference in its entirety). The video mirror display may comprise any suitable devices and systems and optionally may utilize aspects of the compass display systems described in U.S. Pat. Nos. 7,370,983; 7,329,013; 7,308,341; 7,289,037; 7,249,860; 7,004,593; 4,546,551; 5,699,044; 4,953,305; 5,576,687; 5,632,092; 5,677,851; 5,708,410; 5,737,226; 5,802,727; 5,878,370; 6,087,953; 6,173,508; 6,222,460; 6,513,252 and/or 6,642,851, and/or European patent application, published Oct. 11, 2000 under Publication No. EP 0 1043566, and/or U.S. patent application Ser. No. 11/226,628, filed Sep. 14, 2005 and published Mar. 23, 2006 as U.S. Publication No. US-2006-0061008, which are all hereby incorporated herein by reference in their entireties.

Optionally, the video mirror display may be disposed rearward of and behind the reflective element assembly and may comprise a display such as the types disclosed in U.S. Pat. Nos. 7,855,755; 5,530,240; 6,329,925; 7,626,749; 7,581,859; 7,338,177; 7,274,501; 7,255,451; 7,195,381; 7,184,190; 5,668,663; 5,724,187 and/or 6,690,268, and/or in U.S. patent application Ser. No. 11/226,628, filed Sep. 14, 2005 and published Mar. 23, 2006 as U.S. Publication No. US-2006-0061008; and/or Ser. No. 10/538,724, filed Jun. 13, 2005 and published Mar. 9, 2006 as U.S. Publication No. US-2006-0050018, which are all hereby incorporated herein by reference in their entireties. The display is viewable through the reflective element when the display is activated to display information. The display element may be any type of display element, such as a vacuum fluorescent (VF) display element, a light emitting diode (LED) display element, such as an organic light emitting diode (OLED) or an inorganic light emitting diode, an electroluminescent (EL) display element, a liquid crystal display (LCD) element, a video screen display element or backlit thin film transistor (TFT) display element or the like, and may be operable to display various information (as discrete characters, icons or the like, or in a multi-pixel manner) to the driver of the vehicle, such as passenger side inflatable restraint (PSIR) information, tire pressure status, and/or the like. The mirror assembly and/or display may utilize aspects described in U.S. Pat. Nos. 7,184,190; 7,255,451; 7,446,924 and/or 7,338,177, which are all hereby incorporated herein by reference in their entireties. The thicknesses and materials of

the coatings on the substrates of the reflective element may be selected to provide a desired color or tint to the mirror reflective element, such as a blue colored reflector, such as is known in the art and such as described in U.S. Pat. Nos. 5,910,854; 6,420,036 and/or 7,274,501, which are hereby incorporated herein by reference in their entireties.

Optionally, the display or displays and any associated user inputs may be associated with various accessories or systems, such as, for example, a tire pressure monitoring system or a passenger air bag status or a garage door opening system or a telematics system or any other accessory or system of the mirror assembly or of the vehicle or of an accessory module or console of the vehicle, such as an accessory module or console of the types described in U.S. Pat. Nos. 7,289,037; 6,877,888; 6,824,281; 6,690,268; 6,672,744; 6,386,742 and 6,124,886, and/or U.S. patent application Ser. No. 10/538,724, filed Jun. 13, 2005 and published Mar. 9, 2006 as U.S. Publication No. US-2006-0050018, which are hereby incorporated herein by reference in their entireties.

The display or displays may comprise a video display and may utilize aspects of the video display devices or modules described in U.S. Pat. Nos. 7,855,755; 6,690,268; 7,184,190; 7,274,501; 7,370,983 and/or 7,446,650, and/or U.S. patent application Ser. No. 10/538,724, filed Jun. 13, 2005 and published Mar. 9, 2006 as U.S. Publication No. US-2006-0050018, which are all hereby incorporated herein by reference in their entireties. The video display may be operable to display images captured by one or more imaging sensors or cameras at the vehicle. The imaging device and control and image processor and any associated illumination source, if applicable, may comprise any suitable components, and may utilize aspects of the cameras and vision systems described in U.S. Pat. Nos. 5,550,677; 5,877,897; 6,498,620; 5,670,935; 5,796,094; 6,396,397; 6,806,452; 6,690,268; 7,005,974; 7,123,168; 7,004,606; 6,946,978; 7,038,577; 6,353,392; 6,320,176; 6,313,454 and 6,824,281, and/or International Publication No. WO 2010/099416, published Sep. 2, 2010, and/or PCT Application No. PCT/US10/47256, filed Aug. 31, 2010, and/or U.S. patent application Ser. No. 12/508,840, filed Jul. 24, 2009, and published Jan. 28, 2010 as U.S. Pat. Publication No. US-2010-0020170, which are all hereby incorporated herein by reference in their entireties. The camera or cameras may comprise any suitable cameras or imaging sensors or camera modules, and may utilize aspects of the cameras or sensors described in U.S. patent application Ser. No. 12/091,359, filed Apr. 24, 2008 and published Oct. 1, 2009 as U.S. Publication No. US-2009-0244361, and/or U.S. Pat. Nos. 7,965,336 and/or 7,480,149, which are hereby incorporated herein by reference in their entireties. The imaging array sensor may comprise any suitable sensor, and may utilize various imaging sensors or imaging array sensors or cameras or the like, such as a CMOS imaging array sensor, a CCD sensor or other sensors or the like, such as the types described in U.S. Pat. Nos. 5,550,677; 5,670,935; 5,760,962; 5,715,093; 5,877,897; 6,922,292; 6,757,109; 6,717,610; 6,590,719; 6,201,642; 6,498,620; 5,796,094; 6,097,023; 6,320,176; 6,559,435; 6,831,261; 6,806,452; 6,396,397; 6,822,563; 6,946,978; 7,339,149; 7,038,577; 7,004,606; 7,720,580 and/or 7,965,336), and/or PCT Application No. PCT/US2008/076022, filed Sep. 11, 2008 and published Mar. 19, 2009 as International Publication No. WO 2009/036176, and/or PCT Application No. PCT/US2008/078700, filed Oct. 3, 2008 and published Apr. 9, 2009 as International Publication No. WO 2009/046268, which are all hereby incorporated herein by reference in their entireties.

For rear backup assist systems, various types of cameras and/or video displays may be utilized. Typically, rear backup cameras comprise color video cameras and the video display device displays color video images for viewing by the driver of the vehicle. Such color cameras comprise RGB filters (or other color filtering means), and may use a separate near infrared filter, to cause the camera to capture color images, while reducing blooming/pixel saturation due to near infrared radiation from ambient lighting and/or from the rear backup lighting of the vehicle and/or other lights present and operated when the reverse gear of the vehicle is selected. Also, the color filter and especially any near infrared filtering provided for a color rear video camera substantially impacts and reduces the camera's low level light sensitivity. This is especially so for CMOS cameras, such as described in U.S. Pat. Nos. 5,550,677; 5,877,897 and/or 5,796,094, which are hereby incorporated herein by reference in their entireties.

By dispensing with the color and near infrared filters at the camera, the full near infrared sensitivity of the CMOS imager or photosensor array may be harnessed/utilized. Thus, the camera may view or see in the near infrared range (typically light or energy that has a wavelength between about 750 nm and about 2,500 nm or thereabouts). For example, an imager comprising an array of photosensors formed by complementary-metal-oxide-semiconductor (CMOS) technology on a semiconductor substrate can have sensitivity to near infrared radiation out to around about 1,200 nm or thereabouts. This is especially beneficial because when the reversing light comes on, such lights are rich in visible light and also in near infrared light or energy, so by not including the color and near infrared filters at the camera, the performance of the camera is substantially enhanced in such low ambient lighting conditions. Such a camera not only provides enhanced performance in lower ambient lighting conditions, but does so with a reduced cost camera.

Also, in the likes of commercially available video mirrors supplied for vehicles today, the LCD video screen of the video display device used has RGB filters or color mosaic pattern filters associated with the likes of individually addressable pixels of the multi-pixel/reconfigurable liquid crystal display screen, and with the screen backlit by a plurality of light emitting light sources (such as white light emitting light emitting diodes or the like) operable, when powered, to generate a backlighting intensity to the rear of the video screen employed of at least about 30,000 candelas/m^2 (such as by utilizing aspects of the display systems described in U.S. Pat. No. 7,855,755, which is hereby incorporated herein by reference in its entirety) so as to provide a display intensity of video images and other information displayed to and viewed by the driver of the vehicle through the transflective mirror reflector of the likes of an electrochromic interior rearview mirror reflective element utilized of at least about 400 cd/m^2 as viewed by the driver normally operating the vehicle equipped with the display system. Thus, the provision of color video display for viewing by the driver of the vehicle comes at the price of lower light transmission for backlighting through the color mask or filter of the display screen and, thus, requires a high level of backlighting intensity to provide the desired display intensity for all viewing conditions, including higher ambient lighting conditions, such as a sunny day, and such a high level of backlighting intensity is especially required or desired when the video screen is viewed through a transflective reflector of a video mirror assembly, such as described in U.S. Pat. Nos. 6,690,268; 7,184,190; 7,274,

501; 7,370,983; 7,446,650 and/or 7,855,755, which are hereby incorporated herein by reference in their entireties. Thus, the provision of color video display adds cost and complexity to the vision system, and requires powerful backlighting and color filtering (and optionally near infrared filtering and the like).

For a color video display screen, the color filter or mask at the display screen attenuates or reduces light transmission through the display screen by a factor of between about two and three or thereabouts (and could reduce transmission by more or less depending on the particular application), and thus the color filters or masks reduce the backlighting that passes through the display screen for viewing by the driver of the vehicle. Thus, with the color filter or mask removed, the display device may provide comparable display intensity with only about one-half as many to about two-thirds as many backlighting light emitting diodes, and/or the backlighting light emitting diodes may individually operate at a lower intensity and/or electrical current. Thus, the un-filtered display screen may operate with a reduced number of backlighting light emitting diodes or at a reduced intensity, which results in reduced power consumption by the powered backlighting light emitting diodes and reduced heat generated by the powered backlighting light emitting diodes, which achieves a reduction in the cost to manufacture and operate the display screen.

Optionally, a video display system of the present invention may utilize a monochromatic camera and video display to provide a reduced cost video display system for a vehicle. For example, and with reference to FIG. **17**, a video display video display system **120** may comprise a monochromatic video camera **122** and a monochromatic video display **124** (such as a video mirror display screen incorporated in an interior rearview mirror assembly **126** or the like). As shown in FIG. **17**, the camera **122** comprises a rearward facing or rearward viewing camera disposed at a rear exterior portion of the vehicle **128**, and the camera captures images of the rearward scene and communicates an output signal to the video display **124** (such as via a wired link or a wireless link or a network bus of the vehicle or the like). The video camera may comprise a CMOS camera (and associated circuitry) with no color filtering (for example, with no RGB filtering or mosaic color filtering or Bayer pattern filtering or the like) at the photosensing pixels of the camera. Optionally, the video camera may comprise photosensing pixels that are sensitive to infrared or near infrared light (such as by utilizing aspects of the video cameras described in U.S. Pat. Nos. 5,550,677; 5,877,897 and/or 5,796,094, which are hereby incorporated herein by reference in their entireties), and the video camera may not include any near infrared filter or the like. Thus, the rearward viewing camera may provide enhanced sensitivity at lower lighting conditions, without the concern of an adverse effect on the color or tint of the captured images.

The video display unit or module **124** includes a video display screen, such as a backlit liquid crystal display screen, and a plurality of backlighting light emitting diodes. Because the video display screen does not include the color filtering of known color video display screens, the backlighting may provide a reduced backlighting intensity, such as a backlighting intensity of no more than about 25,000 cd/m^2 or thereabouts, and preferably greater than about 10,000 cd/m^2 or thereabouts. With a monochromatic CMOS camera combined with a monochromatic video display, and with a video mirror construction of either prismatic type or electrochromic type (such as described in U.S. Pat. Nos. 6,690,268; 7,184,190; 7,274,501 and/or 7,855,755, which are hereby incorporated herein by reference in their entireties), where a transflective interior mirror reflective element is utilized, it is found that a backlighting intensity of no more than about 25,000 cd/m^2 or thereabouts, and preferably greater than about 10,000 cd/m^2 or thereabouts, provides a driver-viewed display intensity of at least about 400 cd/m^2 as displayed through the transflective mirror reflector in a display on demand display configuration and as viewed by the driver normally operating the vehicle. It is found that dispensing with color filters at both the display screen and the rear backup camera, allied with the dispensing/non-utilization of near infrared filtering at the rear backup camera, results in video display of monochrome images in an economical and affordable manner, and with the monochrome images readily usable and appreciable by a driver executing a reversing maneuver, and with the monochrome video images in compliance with the Notice of Proposed new Rule Making (NPRM) issued by the Department of Transportation, National Highway Traffic Safety Administration (NHTSA) and discussed and incorporated by reference above and with the caption of the NPRM shown in FIG. **2** and aspects of the proposed Final Rule summarized/captured in FIGS. **3**-**5**.

Although preferable to use a plurality of white light emitting LEDs to backlight a thin film transistor reconfigurable video display screen in the likes of an interior video mirror assembly, a plurality of similarly colored LEDs may optionally be used. For example, a plurality of red or amber LEDs may be utilized for backlighting a monochromatic video screen, whereupon the monochrome images displayed and seen are respectively tinted. Such tinted monochrome video displays may be more affordable given that individual red light emitting or amber light emitting LEDs can cost less than corresponding white light emitting LEDs.

Thus, the combination of a monochromatic video mirror screen and a monochromatic rearward viewing camera provides enhanced image capture and image display properties, such as at lower lighting conditions, and can do so at reduced cost and complexity of the display system. The CMOS photosensor array or camera with no color filter (unfiltered) operates to capture unattenuated light (with no color filter and no near IR filter or the like), and the sensitivity of such cameras provide enhanced sensitivity in the infrared range and near infrared range of the electromagnetic spectrum. The monochromatic CMOS camera is in communication with a video screen that also has no color filters. Thus, the camera is more sensitive at lower lighting levels and the display screen can operate at lower backlighting intensities, while still providing the desired or appropriate display intensity for viewing by the driver of the vehicle. Thus, the driver can readily view and appreciate the displayed image and the displayed image may provide enhanced contrast to ease the viewability and discernibility of the displayed images.

The camera module and circuit chip or board and imaging sensor may be implemented and operated in connection with various vehicular vision-based systems, and/or may be operable utilizing the principles of such other vehicular systems, such as a vehicle headlamp control system, such as the type disclosed in U.S. Pat. Nos. 5,796,094; 6,097,023; 6,320,176; 6,559,435; 6,831,261; 7,004,606; 7,339,149 and/or 7,526,103, which are all hereby incorporated herein by reference in their entireties, a rain sensor, such as the types disclosed in U.S. Pat. Nos. 6,353,392; 6,313,454; 6,320,176 and/or 7,480,149, which are hereby incorporated herein by reference in their entireties, a vehicle vision system, such as a forwardly, sidewardly or rearwardly directed vehicle vision

system utilizing principles disclosed in U.S. Pat. Nos. 5,550,677; 5,670,935; 5,760,962; 5,877,897; 5,949,331; 6,222,447; 6,302,545; 6,396,397; 6,498,620; 6,523,964; 6,611,202; 6,201,642; 6,690,268; 6,717,610; 6,757,109; 6,802,617; 6,806,452; 6,822,563; 6,891,563; 6,946,978 and/or 7,859,565, and/or U.S. provisional applications, Ser. No. 61/570,017, filed Dec. 13, 2011; Ser. No. 61/568,791, filed Dec. 9, 2011; Ser. No. 61/567,446, filed Dec. 6, 2011; Ser. No. 61/567,150, filed Dec. 6, 2011; Ser. No. 61/565,713, filed Dec. 1, 2011; Ser. No. 61/563,965, filed Nov. 28, 2011; Ser. No. 61/559,970, filed Nov. 15, 2011; Ser. No. 61/556,556, filed Nov. 7, 2011; Ser. No. 61/554,663, filed Nov. 2, 2011; Ser. No. 61/550,664, filed Oct. 24, 2011; Ser. No. 61/552,167, filed Oct. 27, 2011; Ser. No. 61/548,902, filed Oct. 19, 2011; Ser. No. 61/540,256, filed Sep. 28, 2011; Ser. No. 61/539,049, filed Sep. 26, 2011; Ser. No. 61/537,279, filed Sep. 21, 2011; Ser. No. 61/513,745, filed Aug. 1, 2011; Ser. No. 61/511,738, filed Jul. 26, 2011; Ser. No. 61/503,098, filed Jun. 30, 2011, which are all hereby incorporated herein by reference in their entireties, a trailer hitching aid or tow check system, such as the type disclosed in U.S. Pat. No. 7,005,974 and/or U.S. provisional applications, Ser. No. 61/496,090, filed Jun. 13, 2011, and/or Ser. No. 61/436,397, filed Jan. 26, 2011, which are hereby incorporated herein by reference in their entireties, a reverse or sideward imaging system, such as for a lane change assistance system or lane departure warning system or for a blind spot or object detection system, such as imaging or detection systems of the types disclosed in U.S. Pat. Nos. 7,881,496; 7,720,580; 7,038,577; 5,929,786 and/or 5,786,772, and/or U.S. provisional applications, Ser. No. 60/628,709, filed Nov. 17, 2004; Ser. No. 60/614,644, filed Sep. 30, 2004; Ser. No. 60/618,686, filed Oct. 14, 2004; Ser. No. 60/638,687, filed Dec. 23, 2004, which are hereby incorporated herein by reference in their entireties, a video device for internal cabin surveillance and/or video telephone function, such as disclosed in U.S. Pat. Nos. 5,760,962; 5,877,897; 6,690,268 and/or 7,370,983, and/or U.S. patent application Ser. No. 10/538,724, filed Jun. 13, 2005 and published Mar. 9, 2006 as U.S. Publication No. US-2006-0050018, which are hereby incorporated herein by reference in their entireties, a traffic sign recognition system, a system for determining a distance to a leading or trailing vehicle or object, such as a system utilizing the principles disclosed in U.S. Pat. Nos. 6,396,397 and/or 7,123,168, which are hereby incorporated herein by reference in their entireties, and/or the like.

Optionally, the circuit board or chip may include circuitry for the imaging array sensor and or other electronic accessories or features, such as by utilizing compass-on-a-chip or EC driver-on-a-chip technology and aspects such as described in U.S. Pat. Nos. 7,255,451 and/or 7,480,149, and/or U.S. patent application Ser. No. 11/226,628, filed Sep. 14, 2005 and published Mar. 23, 2006 as U.S. Publication No. US-2006-0061008, and/or Ser. No. 12/578,732, filed Oct. 14, 2009 and published Apr. 22, 2010 as U.S. Publication No. US-2010-0097469, which are hereby incorporated herein by reference in their entireties.

Optionally, the mirror assembly may include user inputs that may comprise buttons or switches for controlling or activating/deactivating one or more electrical accessories or devices of or associated with the mirror assembly. The mirror assembly may comprise any type of switches or buttons, such as touch or proximity sensing switches, such as touch or proximity switches of the types described above, or the inputs may comprise other types of buttons or switches, such as those described in U.S. Pat. Nos. 6,001,486; 6,310,611; 6,320,282; 6,627,918; 6,690,268; 7,224,324; 7,249,860; 7,253,723; 7,255,451; 7,360,932 and/or 7,446,924, and/or U.S. patent application Ser. No. 10/538,724, filed Jun. 13, 2005 and published Mar. 9, 2006 as U.S. Publication No. US-2006-0050018, and/or Ser. No. 12/576,550, filed Oct. 12, 2009, now U.S. Pat. No. 8,465,161, which are all hereby incorporated herein by reference in their entireties, or such as fabric-made position detectors, such as those described in U.S. Pat. Nos. 6,504,531; 6,501,465; 6,492,980; 6,452,479; 6,437,258 and 6,369,804, which are hereby incorporated herein by reference in their entireties.

Optionally, the user inputs or buttons may comprise user inputs for a garage door opening system, such as a vehicle based garage door opening system of the types described in U.S. Pat. Nos. 6,396,408; 6,362,771; 7,023,322 and 5,798,688, which are hereby incorporated herein by reference in their entireties. The user inputs may also or otherwise function to activate and deactivate a display or function or accessory, and/or may activate/deactivate and/or commence a calibration of a compass system of the mirror assembly and/or vehicle. The compass system may include compass sensors and circuitry within the mirror assembly or within a compass pod or module at or near or associated with the mirror assembly. Optionally, the user inputs may also or otherwise comprise user inputs for a telematics system of the vehicle, such as, for example, an ONSTAR® system as found in General Motors vehicles and/or such as described in U.S. Pat. Nos. 4,862,594; 4,937,945; 5,131,154; 5,255,442; 5,632,092; 5,798,688; 5,971,552; 5,924,212; 6,243,003; 6,278,377; 6,420,975; 6,477,464; 6,946,978; 7,308,341; 7,167,796; 7,657,052; 7,004,593 and/or 6,678,614, and/or U.S. patent application Ser. No. 10/538,724, filed Jun. 13, 2005 and published Mar. 9, 2006 as U.S. Publication No. US-2006-0050018, which are all hereby incorporated herein by reference in their entireties.

Optionally, the mirror assembly may include one or more other accessories at or within the mirror casing or otherwise associated with or near the mirror assembly, such as one or more electrical or electronic devices or accessories, such as antennas, including global positioning system (GPS) or cellular phone antennas, such as disclosed in U.S. Pat. No. 5,971,552, a communication module, such as disclosed in U.S. Pat. No. 5,798,688, a blind spot detection system, such as disclosed in U.S. Pat. Nos. 5,929,786 and/or 5,786,772, transmitters and/or receivers, such as a garage door opener or the like, a digital network, such as described in U.S. Pat. No. 5,798,575, a high/low headlamp controller, such as disclosed in U.S. Pat. Nos. 5,796,094 and/or 5,715,093 and/or U.S. provisional application Ser. No. 61/785,565, filed May 15, 2009, a memory mirror system, such as disclosed in U.S. Pat. No. 5,796,176, a hands-free phone attachment, a video device for internal cabin surveillance and/or video telephone function, such as disclosed in U.S. Pat. Nos. 5,760,962 and/or 5,877,897, a remote keyless entry receiver, lights, such as map reading lights or one or more other lights or illumination sources, such as disclosed in U.S. Pat. Nos. 7,657,052; 6,690,268; 5,938,321; 5,813,745; 5,820,245; 5,673,994; 5,649,756; 5,178,448; 5,671,996; 4,646,210; 4,733,336; 4,807,096; 6,042,253; 5,669,698; 7,195,381; 6,971,775 and/or 7,249,860, microphones, such as disclosed in U.S. Pat. Nos. 6,243,003; 6,278,377 and/or 6,420,975, speakers, antennas, including global positioning system (GPS) or cellular phone antennas, such as disclosed in U.S. Pat. No. 5,971,552, a communication module, such as disclosed in U.S. Pat. No. 5,798,688, a voice recorder, a blind spot or object detection system, such as disclosed in U.S. Pat. Nos. 8,058,977; 7,720,580; 5,929,786; 5,786,772; 7,492,281; 7,038,577 and 6,882,287, trans-

mitters and/or receivers, such as for a garage door opener or a vehicle door unlocking system or the like (such as a remote keyless entry system), a digital network, such as described in U.S. Pat. No. 5,798,575, a high/low headlamp controller, such as a camera-based headlamp control, such as disclosed in U.S. Pat. Nos. 5,796,094 and/or 5,715,093, and/or U.S. provisional application Ser. No. 61/785,565, filed May 15, 2009, a memory mirror system, such as disclosed in U.S. Pat. No. 5,796,176, a hands-free phone attachment, an imaging system or components or circuitry or display thereof, such as an imaging and/or display system of the types described in U.S. Pat. Nos. 7,881,496; 7,526,103; 7,400,435; 6,690,268 and 6,847,487, and/or U.S. patent application Ser. No. 12/578,732, filed Oct. 14, 2009 and published Apr. 22, 2010 as U.S. Publication No. US-2010-0097469; and/or Ser. No. 12/508,840, filed Jul. 24, 2009 and published Jan. 28, 2010 as U.S. Publication No. US-2010-0020170, an alert system, such as an alert system of the types described in PCT Application No. PCT/US2010/25545, filed Feb. 26, 2010, a video device for internal cabin surveillance (such as for sleep detection or driver drowsiness detection or the like) and/or video telephone function, such as disclosed in U.S. Pat. Nos. 5,760,962 and/or 5,877,897, a remote keyless entry receiver, a seat occupancy detector, a remote starter control, a yaw sensor, a clock, a carbon monoxide detector, status displays, such as displays that display a status of a door of the vehicle, a transmission selection (4wd/2wd or traction control (TCS) or the like), an antilock braking system, a road condition (that may warn the driver of icy road conditions) and/or the like, a trip computer, a tire pressure monitoring system (TPMS) receiver (such as described in U.S. Pat. Nos. 6,124,647; 6,294,989; 6,445,287; 6,472,979; 6,731,205 and/or 7,423,522, and/or an ONSTAR® system, a compass, such as disclosed in U.S. Pat. Nos. 5,924,212; 4,862,594; 4,937,945; 5,131,154; 5,255,442 and/or 5,632,092, a control system, such as a control system of the types described in PCT Application No. PCT/US10/38477, filed Jun. 14, 2010 and published Dec. 16, 2010 as International Publication No. WO 2010/144900, and/or any other accessory or circuitry or the like (with the disclosures of the above-referenced patents and patent applications and provisional applications and PCT applications being hereby incorporated herein by reference in their entireties).

The accessory or accessories may be positioned at or within the mirror casing and may be included on or integrated in the printed circuit board positioned within the mirror casing, such as along a rear surface of the reflective element or elsewhere within a cavity defined by the casing, without affecting the scope of the present invention. The user actuatable inputs described above may be actuatable to control and/or adjust the accessories of the mirror assembly/system and/or an overhead console and/or an accessory module/windshield electronics module and/or the vehicle. The connection or link between the controls and the systems or accessories may be provided via vehicle electronic or communication systems and the like, and may be connected via various protocols or nodes, such as BLUETOOTH®, SCP, UBP, J1850, CAN J2284, Fire Wire 1394, MOST, LIN, FLEXRAY™, Byte Flight and/or the like, or other vehicle-based or in-vehicle communication links or systems (such as WIFI and/or IRDA) and/or the like, depending on the particular application of the mirror/accessory system and the vehicle. Optionally, the connections or links may be provided via wireless connectivity or links, such as via a wireless communication network or system, such as described in U.S. Pat. No. 7,004,593, which is hereby incorporated herein by reference in its entirety, without affecting the scope of the present invention.

Optionally, a reflective element assembly of the present invention (such as for an interior or exterior rearview mirror assembly) may include a photo sensor or light sensor (such as the types described in U.S. Pat. Nos. 6,831,268; 6,742,904; 6,737,629; 5,406,414; 5,253,109; 4,799,768; 4,793,690 and/or 7,004,593, which are hereby incorporated herein by reference in their entireties) at the rear or fourth surface of the reflective element assembly, such that the photo sensor detects light passing through the reflective element assembly. Examples of such configurations are described in U.S. Pat. Nos. 4,793,690; 5,550,677; 5,193,029 and/or 7,004,593, which are all hereby incorporated herein by reference in their entireties. The reflective element assembly thus may have a window or transmissive port or portion at the photo sensor. The reflective element assembly may have a fixed attenuation such that only a relatively small amount of light passes therethrough, such as about 12 to 25 percent of the light incident on the reflective element assembly, such that the signal to dark current ratio generated at the sensor may be substantially reduced. Because the photo sensor may have a relatively small sensing area, the sensor may not receive or sense a substantial amount of light passing through the reflective element assembly. Therefore, it is envisioned that a light concentrator (such as a lens and/or light channel and/or light pipe and/or other light concentrating device) may be positioned at the photo sensor to focus or direct the light passing through a larger area of the reflective element assembly onto the smaller sensing area of the photo sensor.

Note that mirror cells or reflective element assemblies such as described herein can be included in complete mirror assemblies that include a variety of added-features, such as lighting, telematics functionality and electronics, such as are disclosed in U.S. Pat. Nos. 7,657,052; 7,308,341; 7,195,381; 7,167,796; 7,004,593; 6,690,268; 6,477,464; 6,472,979; 6,445,287; 6,420,975; 6,294,989; 6,278,377; 6,243,003; 6,042,253; 5,938,321; 5,924,212; 5,813,745; 5,820,245; 5,669,698; 5,673,994; 5,671,996; 5,649,756; 5,632,092; 5,255,442; 5,178,448; 5,131,154; 4,937,945; 4,862,594; 4,807,096; 4,733,336 and/or 4,646,210, which are all hereby incorporated herein by reference in their entireties.

Changes and modifications to the specifically described embodiments may be carried out without departing from the principles of the present invention, which is intended to be limited only by the scope of the appended claims as interpreted according to the principles of patent law.

The invention claimed is:

1. A vehicular vision system, said vehicular vision system comprising:

a rear backup camera disposed at a rear portion of a vehicle equipped with said vehicular vision system;

said rear backup camera having a field of view exterior and at least rearward of the equipped vehicle;

wherein the field of view of said rear backup camera is at least 130 degrees;

wherein said rear backup camera is electrically powered no later than 200 milliseconds after a driver of the equipped vehicle shifts a vehicle transmission of the equipped vehicle into reverse gear to commence a backup event;

wherein a valid video signal is available from said rear backup camera no later than 500 milliseconds after electricity is provided to said rear backup camera;

wherein said rear backup camera remains electrically powered throughout the backup event being executed by the driver of the equipped vehicle;

a display device comprising a video display screen disposed in an interior cabin of the equipped vehicle and viewable by the driver of the equipped vehicle, said video display screen having a diagonal dimension of at least 5 inches;

wherein said vehicular vision system displays on said video display screen stable rear backup video images derived from image data captured by said rear backup camera no later than 2 seconds after the driver of the equipped vehicle shifts the vehicle transmission into reverse gear; and

wherein, commencing when the vehicle transmission of the equipped vehicle was shifted into reverse gear to begin the backup event, only rear backup video images derived from image data captured by said rear backup camera are displayed on said video display screen for the duration of the backup event.

2. The vehicular vision system of claim **1**, wherein a driver side camera is disposed at a driver side portion of the equipped vehicle, said driver side camera having a field of view exterior and at least sideward of the equipped vehicle, and wherein a passenger side camera is disposed at a passenger side portion of the equipped vehicle, said passenger side camera having a field of view exterior and at least sideward of the equipped vehicle, and wherein a front camera is disposed at a front portion of the equipped vehicle, said front camera having a field of view exterior and at least forward of the equipped vehicle, and wherein said vehicular vision system forms composite images (i) derived from image data captured by said rear backup camera, (ii) derived from image data captured by said driver side camera, (iii) derived from image data captured by said passenger side camera and (iv) derived from image data captured by said front camera, and wherein the composite images comprise bird's-eye view images.

3. The vehicular vision system of claim **2**, wherein said vehicular vision system is operable by the driver of the equipped vehicle to display on said video display screen rear backup video images derived from image data captured by said rear backup camera in tandem with display of the composite images that comprise bird's-eye view images.

4. The vehicular vision system of claim **3**, wherein said driver side camera is disposed in a driver side exterior sideview mirror assembly of the equipped vehicle, and wherein said passenger side camera is disposed in a passenger side exterior sideview mirror assembly of the equipped vehicle.

5. The vehicular vision system of claim **1**, wherein said video display screen has a diagonal dimension of at least 7 inches.

6. The vehicular vision system of claim **5**, wherein said video display screen is operable to display navigation information for viewing by the driver of the equipped vehicle other than when a backup event is being executed by the driver of the equipped vehicle.

7. The vehicular vision system of claim **5**, wherein said video display screen is operable to display infotainment information for viewing by the driver of the equipped vehicle other than when a backup event is being executed by the driver of the equipped vehicle.

8. The vehicular vision system of claim **1**, wherein the equipped vehicle comprises a trailer hitch disposed at a rear portion of the equipped vehicle, and wherein the field of view of said rear backup camera encompasses the trailer hitch.

9. The vehicular vision system of claim **8**, wherein image data captured by said rear backup camera is cropped to form zoomed video images.

10. The vehicular vision system of claim **9**, wherein the field of view of said rear backup camera, before cropping to form zoomed video images, is at least 180 degrees.

11. The vehicular vision system of claim **1**, wherein said rear backup camera comprises a CMOS camera, and wherein the field of view of said rear backup camera is at least 180 degrees.

12. The vehicular vision system of claim **11**, wherein said video display screen is disposed at a rearview mirror assembly of the equipped vehicle.

13. The vehicular vision system of claim **11**, wherein said video display screen is disposed at an instrument panel of the equipped vehicle.

14. The vehicular vision system of claim **11**, wherein said video display screen is disposed at a center console of the equipped vehicle.

15. The vehicular vision system of claim **1**, wherein said vehicular vision system displays on said video display screen stable rear backup video images derived from image data captured by said rear backup camera no later than 1.5 seconds after the driver of the equipped vehicle shifts the vehicle transmission into reverse gear to commence the backup event.

16. The vehicular vision system of claim **15**, wherein said rear backup camera remains electrically powered after the backup event is completed by the driver of the equipped vehicle.

17. The vehicular vision system of claim **16**, wherein said rear backup camera ceases to be electrically powered upon elapse of a period of time after the backup event is completed by the driver of the equipped vehicle.

18. The vehicular vision system of claim **17**, wherein the period of time is 60 seconds.

19. The vehicular vision system of claim **1**, wherein said video display screen comprises an organic light emitting diode (OLED) display screen.

20. The vehicular vision system of claim **1**, wherein said video display screen comprises a thin film transistor (TFT) liquid crystal display screen.

21. A vehicular vision system, said vehicular vision system comprising:

a rear backup CMOS camera disposed at a rear portion of a vehicle equipped with said vehicular vision system;

said rear backup CMOS camera having a field of view exterior and at least rearward of the equipped vehicle;

wherein the field of view of said rear backup CMOS camera is at least 130 degrees;

wherein said rear backup CMOS camera is electrically powered no later than 200 milliseconds after a driver of the equipped vehicle shifts a vehicle transmission of the equipped vehicle into reverse gear to commence a backup event;

wherein a valid video signal is available from said rear backup CMOS camera no later than 500 milliseconds after electricity is provided to said rear backup CMOS camera;

wherein said rear backup CMOS camera remains electrically powered throughout the backup event being executed by the driver of the equipped vehicle;

a display device comprising a video display screen disposed in an interior cabin of the equipped vehicle and

viewable by the driver of the equipped vehicle, said video display screen having a diagonal dimension of at least 5 inches;

wherein said vehicular vision system displays on said video display screen stable rear backup video images derived from image data captured by said rear backup CMOS camera no later than 2 seconds after the driver of the equipped vehicle shifts the vehicle transmission into reverse gear;

wherein, commencing when the vehicle transmission of the equipped vehicle was shifted into reverse gear to begin the backup event, only rear backup video images derived from image data captured by said rear backup CMOS camera are displayed on said video display screen for the duration of the backup event;

wherein said rear backup CMOS camera remains electrically powered after the backup event is completed by the driver of the equipped vehicle; and

wherein said rear backup CMOS camera ceases to be electrically powered upon elapse of a period of time after the backup event is completed by the driver of the equipped vehicle.

22. The vehicular vision system of claim **21**, wherein the period of time is 60 seconds.

23. The vehicular vision system of claim **21**, wherein the field of view of said rear backup CMOS camera is at least 180 degrees.

24. The vehicular vision system of claim **21**, wherein said video display screen has a diagonal dimension of at least 7 inches.

25. The vehicular vision system of claim **24**, wherein said video display screen is operable to display navigation information for viewing by the driver of the equipped vehicle other than when a backup event is being executed by the driver of the equipped vehicle.

26. The vehicular vision system of claim **24**, wherein said video display screen is operable to display infotainment information for viewing by the driver of the equipped vehicle other than when a backup event is being executed by the driver of the equipped vehicle.

27. The vehicular vision system of claim **24**, wherein the equipped vehicle comprises a trailer hitch disposed at a rear portion of the equipped vehicle, and wherein the field of view of said rear backup CMOS camera encompasses the trailer hitch, and wherein image data captured by said rear backup CMOS camera is cropped to form zoomed video images.

28. A vehicular vision system, said vehicular vision system comprising:

a rear backup CMOS camera disposed at a rear portion of a vehicle equipped with said vehicular vision system;

said rear backup CMOS camera having a field of view exterior and at least rearward of the equipped vehicle;

wherein the field of view of said rear backup CMOS camera is at least 180 degrees;

wherein said rear backup CMOS camera is electrically powered no later than 200 milliseconds after a driver of the equipped vehicle shifts a vehicle transmission of the equipped vehicle into reverse gear to commence a backup event;

wherein a valid video signal is available from said rear backup CMOS camera no later than 500 milliseconds after electricity is provided to said rear backup CMOS camera;

wherein said rear backup CMOS camera remains electrically powered throughout the backup event being executed by the driver of the equipped vehicle;

a display device comprising a video display screen disposed in an interior cabin of the equipped vehicle and viewable by the driver of the equipped vehicle, said video display screen having a diagonal dimension of at least 7 inches; and

wherein said vehicular vision system displays on said video display screen stable rear backup video images derived from image data captured by said rear backup CMOS camera no later than 1.5 seconds after the driver of the equipped vehicle shifts the vehicle transmission into reverse gear.

29. The vehicular vision system of claim **28**, wherein said video display screen is disposed at a rearview mirror assembly of the equipped vehicle.

30. The vehicular vision system of claim **28**, wherein said video display screen is disposed at an instrument panel of the equipped vehicle.

31. The vehicular vision system of claim **28**, wherein said video display screen is disposed at a center console of the equipped vehicle.

32. The vehicular vision system of claim **28**, wherein, commencing when the vehicle transmission of the equipped vehicle was shifted into reverse gear to begin the backup event, only rear backup video images derived from image data captured by said rear backup CMOS camera are displayed on said video display screen for the duration of the backup event.

33. The vehicular vision system of claim **32**, wherein said rear backup CMOS camera remains electrically powered after the backup event is completed by the driver of the equipped vehicle.

34. The vehicular vision system of claim **33**, wherein said rear backup CMOS camera ceases to be electrically powered upon elapse of a period of time after the backup event is completed by the driver of the equipped vehicle.

35. The vehicular vision system of claim **34**, wherein the period of time is 60 seconds.

36. The vehicular vision system of claim **28**, wherein said video display screen is operable to display navigation information for viewing by the driver of the equipped vehicle other than when a backup event is being executed by the driver of the equipped vehicle.

37. The vehicular vision system of claim **28**, wherein said video display screen is operable to display infotainment information for viewing by the driver of the equipped vehicle other than when a backup event is being executed by the driver of the equipped vehicle.

38. The vehicular vision system of claim **28**, wherein the equipped vehicle comprises a trailer hitch disposed at a rear portion of the equipped vehicle, and wherein the field of view of said rear backup CMOS camera encompasses the trailer hitch, and wherein image data captured by said rear backup CMOS camera is cropped to form zoomed video images.

* * * * *