US010846031B2

(12) United States Patent
Chang et al.

(10) Patent No.: US 10,846,031 B2
(45) Date of Patent: Nov. 24, 2020

(54) **SOFTWARE APPLICATION FOR A MOBILE DEVICE TO WIRELESSLY MANAGE OR WIRELESSLY SETUP AN OUTPUT SYSTEM OR OUTPUT DEVICE FOR SERVICE**

(71) Applicant: **Flexiworld Technologies, Inc.**, Vancouver, WA (US)

(72) Inventors: **William Ho Chang**, Vancouver, WA (US); **Christina Ying Liu**, San Francisco, CA (US)

(73) Assignee: **Flexiworld Technologies, Inc.**, Vancouver, WA (US)

(*) Notice: Subject to any disclaimer, the term of this patent is extended or adjusted under 35 U.S.C. 154(b) by 181 days.

(21) Appl. No.: **15/594,440**

(22) Filed: **May 12, 2017**

(65) **Prior Publication Data**

US 2017/0249116 A1 Aug. 31, 2017

Related U.S. Application Data

(63) Continuation of application No. 10/053,765, filed on Jan. 18, 2002, now Pat. No. 9,836,257, and a (Continued)

(51) **Int. Cl.**
G06F 3/048 (2013.01)
G06F 3/12 (2006.01)
(Continued)

(52) **U.S. Cl.**
CPC ..... ***G06F 3/1236*** (2013.01); ***G06F 3/0481*** (2013.01); ***G06F 3/0488*** (2013.01); (Continued)

(58) **Field of Classification Search**
CPC G06F 3/017; H04W 8/005; H04W 84/18
See application file for complete search history.

(56) **References Cited**

U.S. PATENT DOCUMENTS

3,629,493 A 12/1971 Morgenfruh
3,833,297 A 9/1974 Swartz
(Continued)

FOREIGN PATENT DOCUMENTS

CN 1217503 A 5/1999
CN 1488106 A 4/2004
(Continued)

OTHER PUBLICATIONS

Notice of Allowance prepared by the US Patent and Trademark Office for U.S. Appl. No. 15/614,441, dated Nov. 5, 2018, 23 pages.
(Continued)

Primary Examiner — Claudia Dragoescu
(74) *Attorney, Agent, or Firm* — Chernoff Vilhauer LLP

(57) **ABSTRACT**

Mobile device or mobile software configured for wirelessly managing or wirelessly setting up an output system are herein disclosed and enabled. Examples of mobile devices include smart phones and information pads having a touch sensitive screen. The mobile software, which is executable at the mobile device, causes the mobile device to: wirelessly discover the output system that is within physical proximity to the mobile device; receive, via the touch sensitive screen and from a user, selection of an item related to the wirelessly discovered output system; establish a wireless communication link between the mobile device and the output system; and wirelessly transmit security information or authentication information to the output system for setting up the output system for service. The mobile software may further facilitate management of settings of the output system and may further wirelessly drive or control the output system over the wireless communication link.

39 Claims, 14 Drawing Sheets

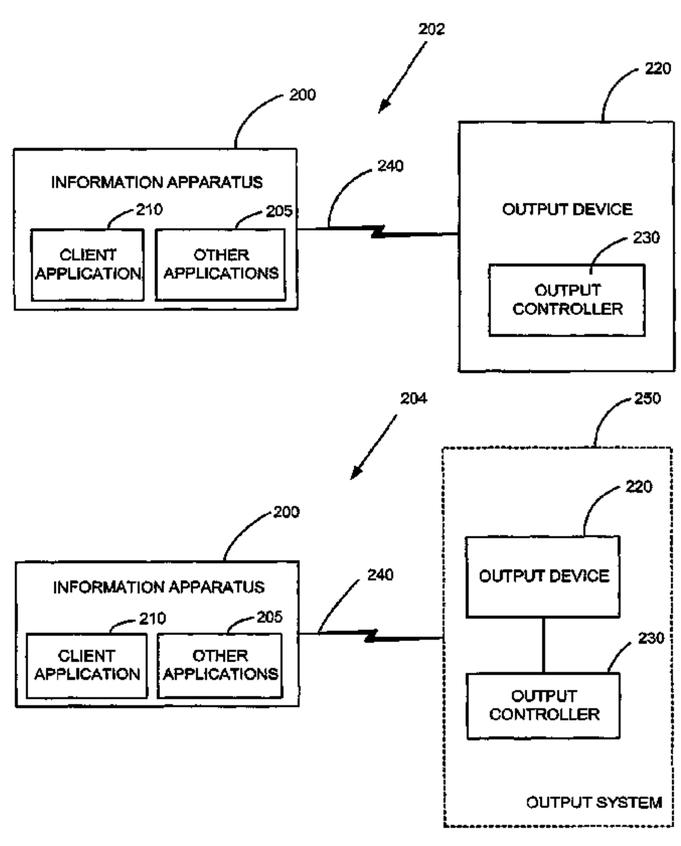

Related U.S. Application Data

continuation-in-part of application No. 09/992,413, filed on Nov. 18, 2001, now Pat. No. 9,965,233, and a continuation-in-part of application No. 13/710,299, filed on Dec. 10, 2012, now Pat. No. 9,798,516, which is a continuation of application No. 12/903,048, filed on Oct. 12, 2010, now Pat. No. 8,332,521, which is a continuation of application No. 10/016,223, filed on Nov. 1, 2001, now Pat. No. 7,941,541.

(60) Provisional application No. 60/262,764, filed on Jan. 19, 2001, provisional application No. 60/252,682, filed on Nov. 20, 2000, provisional application No. 60/245,101, filed on Nov. 1, 2000.

(51) **Int. Cl.**

G06F 3/0488	(2013.01)
G06F 3/0484	(2013.01)
G06F 3/14	(2006.01)
G06F 3/16	(2006.01)
G06K 15/02	(2006.01)
G06Q 20/10	(2012.01)
G10L 15/22	(2006.01)
G10L 15/30	(2013.01)
H04L 29/08	(2006.01)
H04N 1/00	(2006.01)
H04N 1/32	(2006.01)
H04N 1/44	(2006.01)
H04N 7/16	(2011.01)
H04W 4/80	(2018.01)
H04W 8/00	(2009.01)
H04W 12/06	(2009.01)
H04W 12/08	(2009.01)
H04W 76/10	(2018.01)
H04W 76/14	(2018.01)
G06F 3/0481	(2013.01)
H04W 84/12	(2009.01)

(52) **U.S. Cl.**

CPC ***G06F 3/04842*** (2013.01); ***G06F 3/122*** (2013.01); ***G06F 3/1203*** (2013.01); ***G06F 3/1205*** (2013.01); ***G06F 3/128*** (2013.01); ***G06F 3/1208*** (2013.01); ***G06F 3/1226*** (2013.01); ***G06F 3/1228*** (2013.01); ***G06F 3/1229*** (2013.01); ***G06F 3/1238*** (2013.01); ***G06F 3/1245*** (2013.01); ***G06F 3/1247*** (2013.01); ***G06F 3/1253*** (2013.01); ***G06F 3/1258*** (2013.01); ***G06F 3/1284*** (2013.01); ***G06F 3/1285*** (2013.01); ***G06F 3/1286*** (2013.01); ***G06F 3/1288*** (2013.01); ***G06F 3/1292*** (2013.01); ***G06F 3/14*** (2013.01); ***G06F 3/162*** (2013.01); ***G06F 3/167*** (2013.01); ***G06K 15/02*** (2013.01); ***G06K 15/181*** (2013.01); ***G06K 15/1836*** (2013.01); ***G06Q 20/10*** (2013.01); ***G10L 15/22*** (2013.01); ***G10L 15/30*** (2013.01); ***H04L 67/16*** (2013.01); ***H04L 67/303*** (2013.01); ***H04N 1/00244*** (2013.01); ***H04N 1/00283*** (2013.01); ***H04N 1/00307*** (2013.01); ***H04N 1/00403*** (2013.01); ***H04N 1/00411*** (2013.01); ***H04N 1/00488*** (2013.01); ***H04N 1/00854*** (2013.01); ***H04N 1/00938*** (2013.01); ***H04N 1/32534*** (2013.01); ***H04N 1/32582*** (2013.01); ***H04N 1/442*** (2013.01); ***H04N 1/4413*** (2013.01); ***H04N 7/16*** (2013.01); ***H04W 4/80*** (2018.02); ***H04W 8/005*** (2013.01); ***H04W 12/06*** (2013.01); ***H04W 12/08*** (2013.01); ***H04W 76/10*** (2018.02); ***H04W 76/14*** (2018.02); *G10L 2015/223* (2013.01); *H04N 2201/0039* (2013.01); *H04N 2201/0041* (2013.01); *H04N 2201/0053* (2013.01); *H04N 2201/0055* (2013.01); *H04N 2201/0082* (2013.01); *H04N 2201/0094* (2013.01); *H04W 84/12* (2013.01); *Y02D 10/1592* (2018.01)

(56) **References Cited**

U.S. PATENT DOCUMENTS

3,848,856	A	11/1974	Reeber et al.
4,262,301	A	4/1981	Erlichman
4,266,863	A	5/1981	Hollingsworth et al.
4,291,956	A	9/1981	Vogelgesang
4,291,957	A	9/1981	Hollingsworth
4,301,599	A	11/1981	Leay
4,335,955	A	6/1982	Lopata
4,340,905	A	7/1982	Balding
4,360,264	A	11/1982	Baker et al.
4,417,792	A	11/1983	Martin
4,428,001	A	1/1984	Yamamura et al.
4,431,282	A	2/1984	Martin
4,435,059	A	3/1984	Gerber
4,495,490	A	1/1985	Hopper et al.
4,539,585	A	9/1985	Spackova et al.
4,541,010	A	9/1985	Alston
4,553,835	A	11/1985	Morgan, Jr.
4,580,880	A	4/1986	Watson
4,602,280	A	7/1986	Maloomian
4,603,330	A	7/1986	Horne et al.
4,758,881	A	7/1988	Laspada
4,956,665	A	9/1990	Niles
4,958,220	A	9/1990	Alessi et al.
4,979,032	A	12/1990	Alessi et al.
5,048,057	A	9/1991	Saleh et al.
5,129,639	A	7/1992	DeHority
5,166,809	A	11/1992	Surbrook
5,220,674	A	6/1993	Morgan et al.
5,228,118	A	7/1993	Sasaki
5,257,097	A	10/1993	Pineau et al.
5,270,773	A	12/1993	Sklut et al.
5,287,194	A	2/1994	Lobiondo
5,303,342	A	4/1994	Edge
5,319,711	A	6/1994	Servi
5,337,258	A	8/1994	Dennis
5,353,388	A	10/1994	Motoyama
5,404,433	A	4/1995	Hosogai
5,412,798	A	5/1995	Gamey
5,463,623	A	10/1995	Grimes et al.
5,467,434	A	11/1995	Hower, Jr. et al.
5,475,507	A	12/1995	Suzuki et al.
5,479,206	A	12/1995	Ueno et al.
5,485,634	A	1/1996	Weiser et al.
5,487,069	A	1/1996	O'Sullivan et al.
5,490,287	A	2/1996	Itoh et al.
5,506,661	A	4/1996	Hanzawa
5,515,480	A	5/1996	Frazier
5,519,641	A	5/1996	Beers et al.
5,524,185	A	6/1996	Na
5,537,107	A	7/1996	Funado
5,537,517	A	7/1996	Wakabayashi et al.
5,546,079	A	8/1996	Wagner
5,564,109	A	10/1996	Snyder et al.
5,566,278	A	10/1996	Patel et al.
5,568,595	A	10/1996	Yosefi et al.
5,572,632	A	11/1996	Laumeyer et al.
5,574,979	A	11/1996	West
5,580,177	A	12/1996	Gase et al.
5,589,889	A	12/1996	Kawaoka
5,596,697	A	1/1997	Foster et al.
5,604,843	A	2/1997	Shaw et al.
5,613,123	A	3/1997	Tsang et al.
5,613,124	A	3/1997	Atkinson et al.
5,613,191	A	3/1997	Hylton et al.
5,619,257	A	4/1997	Reele et al.

(56) **References Cited**

U.S. PATENT DOCUMENTS

5,619,649 A 4/1997 Kovnat et al.
5,625,757 A 4/1997 Kageyama et al.
5,629,981 A 5/1997 Nerlikar
5,636,211 A 6/1997 Newlin et al.
5,644,662 A 7/1997 Vuylsteke
5,664,243 A 9/1997 Okada et al.
5,675,717 A 10/1997 Yamamoto
5,687,332 A 11/1997 Kurahashi et al.
5,699,495 A 12/1997 Snipp
5,710,557 A 1/1998 Schuette
5,717,688 A 2/1998 Belanger et al.
5,717,742 A 2/1998 Hyde-Thomson
5,724,106 A 3/1998 Autry et al.
5,727,135 A 3/1998 Webb et al.
5,737,501 A 4/1998 Tsunekawa
5,739,928 A 4/1998 Scott
5,748,859 A 5/1998 Takayanagi et al.
5,771,353 A 6/1998 Eggleston et al.
5,793,966 A 8/1998 Amstein et al.
5,796,727 A 8/1998 Harrison et al.
5,799,067 A 8/1998 Kikinis et al.
5,799,068 A 8/1998 Kikinis et al.
5,845,078 A 12/1998 Tezuka et al.
5,850,449 A 12/1998 McManis
5,852,721 A 12/1998 Dillon et al.
5,859,970 A 1/1999 Pleso
5,862,321 A * 1/1999 Lamming G06F 15/0225
358/403
5,862,404 A 1/1999 Onaga
5,867,633 A 2/1999 Taylor, III et al.
5,870,723 A 2/1999 Pare, Jr. et al.
5,880,858 A 3/1999 Jin
5,881,213 A 3/1999 Shaw et al.
5,884,140 A 3/1999 Ishizaki et al.
5,897,260 A 4/1999 Zingher
5,903,832 A 5/1999 Seppanen et al.
5,907,831 A 5/1999 Lotvin et al.
5,911,044 A 6/1999 Lo et al.
5,916,309 A 6/1999 Brown et al.
5,917,542 A 6/1999 Moghadam et al.
5,926,104 A 7/1999 Robinson
5,930,466 A 7/1999 Rademacher
5,931,919 A 8/1999 Thomas et al.
5,933,498 A 8/1999 Schneck et al.
5,937,112 A 8/1999 Herregods et al.
5,940,843 A 8/1999 Zucknovich et al.
5,946,031 A 8/1999 Douglas
5,946,110 A 8/1999 Hu et al.
5,946,458 A 8/1999 Austin et al.
5,949,966 A 9/1999 Hayashi
5,949,978 A 9/1999 Kondo et al.
5,953,546 A 9/1999 Okada et al.
5,960,162 A 9/1999 Yamamoto
5,968,176 A 10/1999 Nessett et al.
5,970,473 A 10/1999 Gerszberg et al.
5,974,234 A 10/1999 Levine et al.
5,974,401 A 10/1999 Enomoto et al.
5,978,560 A 11/1999 Tan et al.
5,983,200 A 11/1999 Slotznick
5,987,454 A 11/1999 Hobbs
5,993,047 A 11/1999 Novogrod et al.
6,003,065 A 12/1999 Yan et al.
6,006,265 A 12/1999 Rangan et al.
6,008,777 A 12/1999 Yiu
6,009,464 A 12/1999 Hamilton et al.
6,020,973 A 2/2000 Levine et al.
6,023,715 A 2/2000 Burkes et al.
6,034,621 A 3/2000 Kaufman
6,035,214 A 3/2000 Henderson
6,041,346 A 3/2000 Chen et al.
6,043,898 A 3/2000 Jacobs
6,046,820 A 4/2000 Konishi
6,061,142 A 5/2000 Shim
6,069,707 A 5/2000 Pekelman
6,070,185 A 5/2000 Anupam et al.
6,072,595 A 6/2000 Yoshiura et al.
6,076,076 A 6/2000 Gotffreid
6,076,109 A 6/2000 Kikinis
6,078,906 A 6/2000 Huberman
6,084,968 A 7/2000 Kennedy et al.
6,087,060 A 7/2000 Chase et al.
6,088,337 A 7/2000 Eastmond et al.
6,088,450 A 7/2000 Davis et al.
6,088,702 A 7/2000 Plantz et al.
6,091,956 A 7/2000 Hollenberg
6,101,291 A 8/2000 Amey et al.
6,115,137 A 9/2000 Ozawa et al.
6,122,526 A 9/2000 Parulski et al.
6,138,178 A 10/2000 Watanabe
6,141,659 A 10/2000 Barker et al.
6,144,950 A 11/2000 Davies et al.
6,144,997 A 11/2000 Lamming et al.
6,145,031 A 11/2000 Mastie et al.
6,148,346 A 11/2000 Hanson
6,167,514 A 12/2000 Matsui et al.
6,173,407 B1 1/2001 Yoon et al.
6,175,922 B1 1/2001 Wang
6,177,926 B1 1/2001 Kunert
6,184,996 B1 2/2001 Gase
6,189,148 B1 2/2001 Clark et al.
6,189,993 B1 2/2001 Mantell
6,192,407 B1 2/2001 Smith et al.
6,195,564 B1 2/2001 Rydbeck et al.
6,199,099 B1 3/2001 Gershman et al.
6,199,106 B1 3/2001 Shaw et al.
6,201,611 B1 3/2001 Carter et al.
6,205,495 B1 3/2001 Gilbert et al.
6,211,858 B1 4/2001 Moon et al.
6,215,483 B1 4/2001 Zigmond
6,215,494 B1 4/2001 Teo
6,223,029 B1 4/2001 Stenman et al.
6,223,059 B1 4/2001 Haestrup
6,225,993 B1 5/2001 Lindblad et al.
6,226,098 B1 5/2001 Kulakowski
6,233,611 B1 5/2001 Ludtke et al.
6,236,971 B1 5/2001 Stefik et al.
6,246,486 B1 6/2001 Takahashi
6,252,964 B1 6/2001 Wasilewski et al.
6,255,961 B1 7/2001 Van Ryzin et al.
6,256,666 B1 7/2001 Singhal
6,263,503 B1 7/2001 Margulis
6,285,357 B1 9/2001 Kushiro et al.
6,285,889 B1 9/2001 Nykanen et al.
6,288,790 B1 9/2001 Yellepeddy et al.
6,292,283 B1 9/2001 Grandbois
6,312,106 B1 11/2001 Walker
6,324,521 B1 11/2001 Shiota et al.
6,330,611 B1 12/2001 Itoh et al.
6,332,193 B1 12/2001 Glass et al.
6,360,252 B1 3/2002 Rudy et al.
6,363,149 B1 3/2002 Candelore
6,363,452 B1 3/2002 Lach
6,366,682 B1 4/2002 Hoffman et al.
6,366,912 B1 4/2002 Wallent et al.
6,366,965 B1 4/2002 Binford et al.
6,369,909 B1 4/2002 Shima
6,379,058 B1 4/2002 Petteruti et al.
6,385,305 B1 5/2002 Gerzberg et al.
6,389,010 B1 5/2002 Kubler et al.
6,393,271 B1 5/2002 Dougherty
6,396,598 B1 5/2002 Kashiwagi et al.
6,418,439 B1 7/2002 Papiemiak et al.
6,421,716 B1 7/2002 Eldridge et al.
6,421,748 B1 7/2002 Lin et al.
6,430,599 B1 8/2002 Baker et al.
6,430,601 B1 * 8/2002 Eldridge G06Q 10/10
707/E17.005
6,434,535 B1 8/2002 Kupka et al.
6,437,786 B1 8/2002 Yasukawa
6,442,375 B1 8/2002 Parmentier
6,449,052 B1 9/2002 Sherer et al.
6,452,692 B1 9/2002 Yacoub
6,453,127 B2 9/2002 Wood et al.
6,467,688 B1 10/2002 Goldman et al.

(56) **References Cited**

U.S. PATENT DOCUMENTS

6,470,189 B1 10/2002 Hill et al.
6,473,070 B2 10/2002 Mishra et al.
6,473,800 B1 10/2002 Jerger et al.
6,477,575 B1 11/2002 Koeppel et al.
6,480,292 B1 11/2002 Sugiyama
6,483,906 B1 11/2002 Iggulden et al.
6,487,587 B1 11/2002 Dubey
6,487,599 B1 11/2002 Smith et al.
6,489,934 B1 12/2002 Klausner
6,493,104 B1 12/2002 Cromer et al.
6,493,550 B1 12/2002 Raith
6,496,855 B1 12/2002 Hunt et al.
6,510,235 B1 1/2003 Shin et al.
6,510,515 B1 1/2003 Raith
6,515,988 B1 2/2003 Eldridge et al.
6,519,049 B1 2/2003 Nagasaka
6,526,129 B1 2/2003 Beaton et al.
6,529,522 B1 3/2003 Ito et al.
6,535,855 B1 3/2003 Cahill et al.
6,540,722 B1 4/2003 Boyle et al.
6,542,173 B1 4/2003 Buckley
6,542,491 B1 4/2003 Tari et al.
6,545,612 B1 4/2003 Lindgren et al.
6,545,669 B1 4/2003 Kinawi et al.
6,545,722 B1 4/2003 Schultheiss et al.
6,546,387 B1 4/2003 Triggs
6,546,419 B1 4/2003 Humpleman et al.
6,550,672 B1 4/2003 Tracy et al.
6,553,240 B1 4/2003 Dervarics
6,553,431 B1 4/2003 Yamamoto et al.
6,556,313 B1 4/2003 Chang et al.
6,574,672 B1 6/2003 Mitchell et al.
6,577,861 B2 6/2003 Ogasawara
6,578,072 B2 6/2003 Watanabe et al.
6,584,903 B2 7/2003 Jacobs
6,587,835 B1 7/2003 Treyz et al.
6,598,031 B1 7/2003 Ice
6,600,569 B1 7/2003 Osada et al.
6,601,108 B1 7/2003 Marmor
6,604,135 B1 8/2003 Rogers et al.
6,604,148 B1 8/2003 Dennison
6,607,314 B1 8/2003 McCannon et al.
6,608,928 B1 8/2003 Queiroz
6,618,039 B1 9/2003 Grant et al.
6,618,592 B1 9/2003 Vilander et al.
6,621,589 B1 9/2003 Al-Kazily et al.
6,622,015 B1 9/2003 Himmel et al.
6,623,527 B1 9/2003 Hamzy
6,628,302 B2 9/2003 White et al.
6,628,417 B1 9/2003 Naito et al.
6,633,346 B1 10/2003 Yamamoto
6,633,395 B1 10/2003 Tuchitoi et al.
6,633,757 B1 10/2003 Hermann et al.
6,636,202 B2 10/2003 Ishmael, Jr. et al.
6,636,259 B1 10/2003 Anderson et al.
6,643,650 B1 11/2003 Slaughter et al.
6,654,135 B2 11/2003 Mitani
6,658,625 B1 12/2003 Allen
6,670,982 B2 12/2003 Clough et al.
6,671,068 B1 12/2003 Chang
6,678,004 B1 1/2004 Schultheiss et al.
6,678,751 B1 1/2004 Hays et al.
6,690,918 B2 2/2004 Evans et al.
6,694,371 B1 2/2004 Sanai
6,697,848 B2 2/2004 Hamilton et al.
6,701,009 B1 3/2004 Makoto et al.
6,702,181 B2 3/2004 Ramachandran
6,705,781 B2 3/2004 Iwazaki
6,707,581 B1 3/2004 Browning
6,711,677 B1 3/2004 Wiegley
6,725,281 B1 4/2004 Zintel et al.
6,735,616 B1 5/2004 Thompson et al.
6,738,841 B1 5/2004 Wolff
6,741,871 B1 5/2004 Silverbrook et al.
6,745,229 B1 6/2004 Gobin et al.
6,745,937 B2 6/2004 Walsh et al.
6,748,195 B1 6/2004 Phillips
6,750,978 B1 6/2004 Marggraff et al.
6,751,732 B2 6/2004 Strobel et al.
6,753,978 B1 6/2004 Chang
6,757,070 B1 6/2004 Lin et al.
6,760,745 B1 7/2004 Tan et al.
6,769,012 B1 7/2004 Liu et al.
6,771,749 B1 8/2004 Bansal et al.
6,775,407 B1 8/2004 Gindele et al.
6,778,289 B1 8/2004 Iwata
6,784,855 B2 8/2004 Matthews et al.
6,785,727 B1 8/2004 Yamazaki
6,788,332 B1 9/2004 Cook
6,788,428 B1 9/2004 Shimokawa
6,789,107 B1 9/2004 Bates et al.
6,789,228 B1 9/2004 Merril et al.
6,792,148 B1 9/2004 Wergeland et al.
6,798,530 B1 9/2004 Buckley et al.
6,801,692 B2 10/2004 Nishimura et al.
6,801,962 B2 10/2004 Taniguchi et al.
6,813,039 B1 11/2004 Silverbrook et al.
6,816,274 B1 11/2004 Silverbrook et al.
6,816,724 B1 11/2004 Asikainen
6,819,919 B1 11/2004 Tanaka
6,826,632 B1 11/2004 Wugofski
6,839,623 B1 1/2005 Tillgren et al.
6,839,775 B1 1/2005 Kao et al.
6,840,441 B2 1/2005 Monaghan et al.
6,850,252 B1 2/2005 Hoffberg
6,850,767 B1 2/2005 Maxymych
6,856,430 B1 2/2005 Gase
6,857,021 B1 2/2005 Schuster et al.
6,857,132 B1 2/2005 Rakib et al.
6,857,716 B1 2/2005 Nagahashi
6,859,197 B2 2/2005 Klein et al.
6,859,228 B1 2/2005 Chang et al.
6,859,937 B1 2/2005 Narayan et al.
6,873,836 B1 3/2005 Sorrells et al.
6,882,859 B1 4/2005 Rao et al.
6,885,878 B1 4/2005 Borgstrom et al.
6,888,643 B1 5/2005 Grimes
6,889,385 B1 5/2005 Rakib et al.
6,892,251 B2 5/2005 Anderson et al.
6,895,444 B1 5/2005 Weisshaar et al.
6,898,640 B1 5/2005 Kurita et al.
6,901,429 B2 5/2005 Dowling
6,904,527 B1 6/2005 Parlour et al.
6,909,424 B2 6/2005 Liebenow et al.
6,914,694 B1 7/2005 Ichikawa et al.
6,915,124 B1 7/2005 Kiessling et al.
6,915,422 B1 7/2005 Nakamura
6,922,258 B2 7/2005 Pineau
6,930,709 B1 8/2005 Creamer et al.
6,932,523 B1 8/2005 Yamada et al.
6,941,014 B2 9/2005 Lin et al.
6,947,067 B2 9/2005 Halttunen
6,947,995 B2 9/2005 Chang et al.
6,950,645 B1 9/2005 Kammer et al.
6,952,414 B1 10/2005 Willig
6,957,194 B2 10/2005 Stefik et al.
6,958,821 B1 10/2005 McIntyre
6,959,339 B1 10/2005 Wu et al.
6,963,582 B1 11/2005 Xu
6,980,319 B2 12/2005 Ohta
6,983,310 B2 1/2006 Rouse et al.
6,990,548 B1 1/2006 Kaylor
6,996,555 B2 2/2006 Mute et al.
6,999,112 B2 2/2006 Seaman et al.
7,004,395 B2 2/2006 Koenck et al.
7,007,066 B1 2/2006 Malik
7,007,067 B1 2/2006 Azvine et al.
7,016,062 B2 3/2006 Ishizuka
7,020,685 B1 3/2006 Chen et al.
7,024,200 B2 4/2006 McKenna et al.
7,025,256 B1 4/2006 Drummond et al.
7,028,102 B1 4/2006 Larsson et al.
7,038,797 B1 5/2006 Lapstun et al.
7,039,358 B1 5/2006 Shellhammer et al.

(56) **References Cited**

U.S. PATENT DOCUMENTS

7,039,445 B1 5/2006 Yoshizawa
7,058,356 B2 6/2006 Slotznick
7,062,651 B1 6/2006 Lapstun et al.
7,068,621 B2 6/2006 Bouet et al.
7,076,534 B1 7/2006 Cleron et al.
7,076,730 B1 7/2006 Baker
7,088,691 B2 8/2006 Fujita
7,088,990 B1 8/2006 Isomursu et al.
7,095,854 B1 8/2006 Ginter et al.
7,099,027 B1 8/2006 Barry et al.
7,099,304 B2 8/2006 Liu et al.
7,103,834 B1 9/2006 Humpleman et al.
7,112,138 B2 9/2006 Hedrick et al.
7,113,979 B1 9/2006 Smith et al.
7,133,845 B1 11/2006 Ginter et al.
7,133,846 B1 11/2006 Ginter et al.
7,139,591 B2 11/2006 Callaghan et al.
7,143,356 B1 11/2006 Shafrir et al.
7,149,726 B1 12/2006 Lingle et al.
7,155,163 B2 12/2006 Cannon et al.
7,164,413 B2 1/2007 Davis et al.
7,164,885 B2 1/2007 Jonsson et al.
7,170,857 B2 1/2007 Stephens et al.
7,178,718 B2 2/2007 Silverbrook et al.
7,180,614 B1 2/2007 Senoo et al.
7,184,707 B2 2/2007 Tada et al.
7,185,108 B1 2/2007 Okachi
7,187,947 B1 * 3/2007 White G06Q 30/0267
455/556.1
7,197,531 B2 3/2007 Anderson
7,203,721 B1 4/2007 Ben-Efraim et al.
7,209,955 B1 4/2007 Major et al.
7,213,061 B1 5/2007 Hite et al.
7,215,436 B2 5/2007 Hull et al.
7,221,961 B1 5/2007 Fukumoto et al.
7,237,253 B1 6/2007 Blackketter et al.
7,239,346 B1 7/2007 Priddy
7,239,868 B2 7/2007 Furukawa et al.
7,260,597 B1 8/2007 Hofrichter et al.
7,262,873 B1 8/2007 Rasche et al.
7,263,270 B1 8/2007 Lapstun et al.
7,272,788 B2 9/2007 Anderson et al.
7,283,808 B2 10/2007 Castell et al.
7,287,089 B1 10/2007 Lamoureux et al.
7,289,792 B1 10/2007 Turunen
7,289,964 B1 10/2007 Bowman-Amuah
7,305,713 B1 12/2007 Crance
7,318,086 B2 1/2008 Chang et al.
7,327,481 B2 2/2008 Such et al.
7,330,110 B1 2/2008 Heintzman et al.
7,334,024 B2 2/2008 Martino
7,337,472 B2 2/2008 Olsen et al.
7,346,374 B2 3/2008 Witkowski et al.
7,348,961 B1 3/2008 Shneidman
7,349,722 B2 3/2008 Witkowski et al.
7,349,955 B1 3/2008 Korb et al.
7,353,280 B2 4/2008 Chiles et al.
7,355,730 B2 4/2008 Landau et al.
7,356,347 B1 4/2008 Kammer
7,359,714 B2 4/2008 Parupudi et al.
7,360,230 B1 4/2008 Paz et al.
7,366,468 B2 4/2008 Yoshida
7,370,090 B2 5/2008 Nakaoka et al.
7,376,583 B1 5/2008 Rolf
7,379,660 B2 5/2008 Shiohara
7,379,914 B2 5/2008 Aoki et al.
7,379,958 B2 5/2008 Karhu
7,383,355 B1 6/2008 Berkman et al.
7,403,510 B1 7/2008 Miyake
7,412,651 B2 8/2008 Lapstun et al.
7,428,575 B1 9/2008 Motoyama
7,440,772 B2 10/2008 White et al.
7,451,195 B1 11/2008 Seligmann
7,454,796 B2 11/2008 Mazzagatte et al.
7,460,853 B2 12/2008 Toyoshima
7,477,890 B1 1/2009 Narayanaswami
7,478,403 B1 1/2009 Allavarpu et al.
7,483,958 B1 1/2009 Elabbady et al.
7,511,630 B2 3/2009 Strickland et al.
7,512,671 B1 3/2009 Gladwin et al.
7,533,344 B1 5/2009 Motoyama et al.
7,554,684 B1 6/2009 Senoo et al.
7,555,287 B1 6/2009 Heinonen et al.
7,571,142 B1 8/2009 Flitcroft et al.
7,574,723 B2 8/2009 Putterman et al.
RE40,910 E 9/2009 Aoki et al.
7,584,269 B2 9/2009 Moore et al.
7,587,196 B2 9/2009 Hansen
7,593,123 B2 9/2009 Sugahara
7,609,402 B2 10/2009 Chang et al.
7,616,600 B2 11/2009 Sparr et al.
7,644,039 B1 1/2010 Magee et al.
7,646,503 B2 1/2010 Silverbrook et al.
7,650,145 B2 1/2010 Ukita et al.
7,660,460 B2 2/2010 Wu et al.
7,660,601 B2 2/2010 Janik et al.
7,668,535 B2 2/2010 Conneely et al.
7,685,244 B2 3/2010 Mousseau et al.
7,688,467 B2 3/2010 Enmei
7,697,467 B2 4/2010 Kubler et al.
7,712,125 B2 5/2010 Herigstad et al.
7,725,912 B2 5/2010 Margulis
7,738,886 B1 6/2010 Connolly et al.
7,743,133 B1 6/2010 Motoyama et al.
RE41,416 E 7/2010 Liu et al.
7,761,541 B1 7/2010 Morley et al.
RE41,487 E 8/2010 Liu et al.
RE41,532 E 8/2010 Liu et al.
7,779,097 B2 8/2010 Lamkin et al.
RE41,689 E 9/2010 Liu et al.
7,797,367 B1 9/2010 Gelvin et al.
7,805,720 B2 9/2010 Chang et al.
RE41,882 E 10/2010 Liu et al.
7,812,856 B2 10/2010 Ortiz et al.
7,814,516 B2 10/2010 Stecyk et al.
7,831,276 B2 11/2010 Kumar
7,840,639 B1 11/2010 Gough
7,890,581 B2 2/2011 Rao et al.
7,900,833 B2 3/2011 Silverbrook et al.
7,904,579 B2 3/2011 Janik et al.
7,908,401 B2 3/2011 Chang
7,929,950 B1 4/2011 Rao et al.
7,937,450 B2 5/2011 Janik
7,941,541 B2 5/2011 Chang et al.
7,944,577 B2 5/2011 Chang et al.
7,949,223 B2 5/2011 Shiohara
7,953,818 B2 5/2011 Chang et al.
7,957,354 B1 6/2011 Hickman et al.
7,958,457 B1 6/2011 Brandenberg et al.
7,971,784 B2 7/2011 Lapstun et al.
7,984,098 B2 7/2011 Enete et al.
7,986,298 B1 7/2011 Dulaney et al.
7,991,347 B1 8/2011 Chan
RE42,725 E 9/2011 Chang et al.
RE42,828 E 10/2011 Liu et al.
8,045,952 B2 10/2011 Qureshey et al.
8,073,565 B2 12/2011 Johnson
8,086,961 B2 12/2011 Saeki et al.
8,098,140 B1 1/2012 Escobosa et al.
RE43,181 E 2/2012 Liu et al.
8,122,163 B2 2/2012 Morohashi
8,146,077 B2 3/2012 McNally et al.
8,169,649 B2 5/2012 Chang et al.
8,184,324 B2 5/2012 Chang et al.
8,285,802 B2 10/2012 Chang et al.
8,295,406 B1 10/2012 Sorrells et al.
8,296,757 B2 10/2012 Chang et al.
8,332,521 B2 12/2012 Chang et al.
8,339,496 B2 12/2012 Shiohara
8,359,397 B2 1/2013 Traversat et al.
8,386,557 B2 2/2013 Fillebrown et al.
RE44,103 E 3/2013 Williams
8,448,215 B2 5/2013 Hassell et al.
8,467,969 B2 6/2013 Nielsen et al.

(56) **References Cited**

U.S. PATENT DOCUMENTS

8,533,352 B2 9/2013 Chang
8,583,263 B2 11/2013 Hoffberg et al.
8,595,717 B2 11/2013 Chang et al.
8,630,000 B2 1/2014 Chang et al.
8,705,097 B2 4/2014 Chang et al.
8,706,627 B2 4/2014 Shore
8,707,185 B2 4/2014 Robinson et al.
8,711,408 B2 4/2014 Chang et al.
8,964,220 B2 2/2015 Chang et al.
8,972,610 B2 3/2015 Chang
8,989,064 B2 3/2015 Chang et al.
9,009,060 B2 4/2015 McNally
9,015,329 B2 4/2015 Chang et al.
9,031,537 B2 5/2015 Ortiz et al.
9,036,181 B2 5/2015 Chang et al.
9,037,088 B2 5/2015 Chang et al.
9,042,811 B2 5/2015 Chang et al.
9,043,482 B2 5/2015 Chang
9,069,510 B2 6/2015 Chang et al.
9,075,504 B2 7/2015 Takeuchi
9,092,177 B2 7/2015 Chang et al.
9,092,535 B1 7/2015 Gough
9,099,152 B2 8/2015 Marcus
9,100,825 B2 8/2015 Schultz et al.
9,110,622 B2 8/2015 Chang et al.
9,116,723 B2 8/2015 Chang et al.
9,122,429 B1 9/2015 Cecile et al.
9,164,718 B2 10/2015 Chang et al.
9,210,340 B2 12/2015 Mizutani et al.
9,298,407 B2 3/2016 Chang et al.
9,324,208 B2 4/2016 Gagner et al.
9,351,193 B2 5/2016 Raleigh et al.
9,383,956 B2 7/2016 Chang et al.
9,389,822 B2 7/2016 Chang et al.
9,491,523 B2 11/2016 Margulis
9,549,835 B2 1/2017 Schreck et al.
9,622,058 B1 4/2017 Imes
9,798,516 B2 10/2017 Chang et al.
9,819,710 B2 11/2017 Anderson et al.
RE46,637 E 12/2017 Liu et al.
9,836,257 B2 12/2017 Chang et al.
9,836,259 B2 12/2017 Chang et al.
9,841,935 B2 12/2017 Chang et al.
9,965,233 B2 5/2018 Chang et al.
9,971,555 B2 5/2018 Chang et al.
10,037,178 B2 7/2018 Chang et al.
10,055,634 B2 8/2018 Han et al.
10,108,394 B2 10/2018 Chang et al.
10,126,991 B2 11/2018 Chang et al.
10,133,527 B2 11/2018 Chang et al.
10,140,071 B2 11/2018 Chang et al.
10,140,072 B2 11/2018 Chang et al.
10,140,073 B2 11/2018 Chang et al.
10,152,285 B2 12/2018 Chang et al.
10,162,596 B2 12/2018 Chang et al.
10,261,739 B2 4/2019 Chang et al.
10,284,953 B2 5/2019 Hammer et al.
10,303,411 B2 5/2019 Chang et al.
10,346,114 B2 7/2019 Chang et al.
10,359,957 B2 7/2019 Chang et al.
10,387,087 B2 8/2019 Chang et al.
10,481,846 B2 11/2019 Chang et al.
10,481,847 B2 11/2019 Chang et al.
10,489,096 B2 11/2019 Chang et al.
10,592,201 B2 3/2020 Chang et al.
10,592,202 B2 3/2020 Chang et al.
10,606,535 B2 3/2020 Chang et al.
10,642,576 B2 5/2020 Chang et al.
RE48,066 E 6/2020 Liu et al.
RE48,088 E 7/2020 Liu et al.
10,740,066 B2 8/2020 Chang et al.
10,761,791 B2 9/2020 Chang et al.
10,768,871 B2 9/2020 Chang et al.
2001/0011302 A1 8/2001 Son
2001/0012281 A1 8/2001 Hall et al.
2001/0015717 A1 8/2001 Mishra et al.
2001/0019953 A1 9/2001 Furukawa et al.
2001/0029531 A1 10/2001 Ohta
2001/0032254 A1 10/2001 Hawkins
2001/0034222 A1 10/2001 Roustaei et al.
2001/0055492 A1 12/2001 Wood et al.
2001/0055951 A1 12/2001 Slotznick
2002/0009988 A1 1/2002 Murata
2002/0012329 A1* 1/2002 Atkinson G06F 9/4411
370/330
2002/0013730 A1 1/2002 Bigus
2002/0017827 A1 2/2002 Zuppero et al.
2002/0026492 A1 2/2002 Fujita
2002/0038612 A1 4/2002 Iwazaki
2002/0042263 A1 4/2002 Ishikawa
2002/0049839 A1 4/2002 Miida et al.
2002/0051200 A1 5/2002 Chang et al.
2002/0057452 A1 5/2002 Yoshino
2002/0059489 A1 5/2002 Davis et al.
2002/0062398 A1 5/2002 Chang et al.
2002/0062406 A1 5/2002 Chang et al.
2002/0065873 A1 5/2002 Ishizuka
2002/0071577 A1 6/2002 Lemay et al.
2002/0077980 A1 6/2002 Chang et al.
2002/0078101 A1 6/2002 Chang et al.
2002/0081993 A1 6/2002 Toyoshima
2002/0087622 A1 7/2002 Anderson
2002/0090912 A1 7/2002 Cannon et al.
2002/0092029 A1 7/2002 Smith
2002/0097408 A1 7/2002 Chang et al.
2002/0097415 A1 7/2002 Chang et al.
2002/0097416 A1 7/2002 Chang et al.
2002/0097417 A1 7/2002 Chang et al.
2002/0097418 A1 7/2002 Chang et al.
2002/0097419 A1 7/2002 Chang et al.
2002/0097433 A1 7/2002 Chang et al.
2002/0099884 A1 7/2002 Chang et al.
2002/0178272 A1 11/2002 Igarashi et al.
2002/0194302 A1 12/2002 Blumberg
2003/0002072 A1 1/2003 Berkema et al.
2003/0013483 A1 1/2003 Ausems et al.
2003/0013484 A1 1/2003 Nishimura et al.
2003/0028481 A1 2/2003 Flitcroft et al.
2003/0054846 A1 3/2003 Parry
2003/0061381 A1 3/2003 Brisebois et al.
2003/0061606 A1 3/2003 Hartwig et al.
2003/0073431 A1 4/2003 Dorenbosch
2003/0084177 A1 5/2003 Mulligan
2003/0088421 A1 5/2003 Maes et al.
2003/0115256 A1 6/2003 Brockway et al.
2003/0120754 A1 6/2003 Muto et al.
2003/0122934 A1 7/2003 Shiohara
2003/0128272 A1 7/2003 Clough et al.
2003/0160993 A1 8/2003 Kang
2003/0211188 A1 11/2003 Kachnic
2003/0228842 A1 12/2003 Heinonen et al.
2004/0057075 A1 3/2004 Stewart et al.
2004/0127254 A1 7/2004 Chang
2005/0078088 A1 4/2005 Davis et al.
2005/0086300 A1 4/2005 Yeager et al.
2005/0114869 A1 5/2005 Iwamura et al.
2005/0125664 A1 6/2005 Berkema et al.
2005/0204176 A1 9/2005 Togawa
2005/0210120 A1 9/2005 Yukie et al.
2005/0222963 A1 10/2005 Johnson
2006/0013630 A1 1/2006 Silverbrook et al.
2006/0129627 A1 6/2006 Phillips et al.
2006/0167784 A1 7/2006 Hoffberg
2007/0125860 A1 6/2007 Lapstun et al.
2007/0129109 A1 6/2007 Silverbrook et al.
2007/0133073 A1 6/2007 Shida et al.
2008/0004925 A1 1/2008 Bangel et al.
2008/0004965 A1 1/2008 Park
2008/0007482 A1 1/2008 Morioka
2008/0049253 A1 2/2008 Chang et al.
2008/0049651 A1 2/2008 Chang et al.
2008/0098468 A1 4/2008 Cortopassi et al.
2008/0146283 A1 6/2008 Rao et al.
2008/0201236 A1 8/2008 Field et al.

(56) **References Cited**

U.S. PATENT DOCUMENTS

2008/0218776	A1	9/2008	Takami et al.
2008/0250459	A1	10/2008	Roman
2008/0318602	A1	12/2008	Chang et al.
2009/0002760	A1	1/2009	Chang et al.
2009/0048978	A1	2/2009	Ginter et al.
2009/0070411	A1	3/2009	Chang et al.
2009/0094457	A1	4/2009	Lapstun et al.
2009/0180142	A1	7/2009	Suzuki et al.
2009/0290182	A1	11/2009	Hashimoto et al.
2010/0003966	A1	1/2010	Lu et al.
2010/0020199	A1	1/2010	Meitav et al.
2010/0020382	A1	1/2010	Su et al.
2010/0022755	A1	1/2010	Umeda et al.
2010/0039660	A1	2/2010	Chang et al.
2010/0039669	A1	2/2010	Chang et al.
2010/0201996	A1	8/2010	Chang et al.
2010/0203824	A1	8/2010	Chang et al.
2010/0227550	A1	9/2010	Chang et al.
2011/0016280	A1	1/2011	Chang et al.
2011/0034150	A1	2/2011	Chang et al.
2011/0035319	A1	2/2011	Brand et al.
2011/0035682	A1	2/2011	Chang et al.
2011/0138378	A1	6/2011	Chang et al.
2011/0145074	A1	6/2011	Polizzoto
2011/0167166	A1	7/2011	Chang et al.
2011/0167175	A1	7/2011	Chang
2011/0197159	A1	8/2011	Chaganti et al.
2011/0211226	A1	9/2011	Chang et al.
2011/0279829	A1	11/2011	Chang et al.
2011/0279863	A1	11/2011	Chang et al.
2011/0313775	A1	12/2011	Laligand et al.
2012/0036016	A1	2/2012	Hoffberg et al.
2012/0089299	A1	4/2012	Breed
2012/0226777	A1	9/2012	Shanahan
2012/0230315	A1	9/2012	Chang et al.
2012/0258700	A1	10/2012	Chang et al.
2013/0079141	A1	3/2013	Barney et al.
2013/0095887	A1	4/2013	Chang et al.
2013/0103775	A1	4/2013	Chang et al.
2013/0104052	A1	4/2013	Chang et al.
2013/0109353	A1	5/2013	Chang et al.
2013/0267204	A1	10/2013	Schultz et al.
2013/0297670	A1	11/2013	Lundberg et al.
2014/0018130	A1	1/2014	Chang
2014/0082604	A1	3/2014	Chang et al.
2014/0309806	A1	10/2014	Ricci
2014/0309813	A1	10/2014	Ricci
2014/0309862	A1	10/2014	Ricci
2014/0309863	A1	10/2014	Ricci
2014/0309870	A1	10/2014	Ricci et al.
2014/0310031	A1	10/2014	Ricci
2014/0310333	A1	10/2014	Franco et al.
2014/0310788	A1	10/2014	Ricci
2015/0238817	A1	8/2015	Watterson et al.
2015/0325061	A1	11/2015	Gerstenberg et al.
2015/0356561	A1	12/2015	Chang et al.
2015/0356564	A1	12/2015	Chang et al.
2015/0356565	A1	12/2015	Chang et al.
2015/0363763	A1	12/2015	Chang et al.
2015/0381612	A1	12/2015	Chang et al.
2015/0382150	A1	12/2015	Ansermet et al.
2016/0011836	A1	1/2016	Chang et al.
2016/0054962	A1	2/2016	Park
2016/0072975	A1	3/2016	Fujioka
2016/0087957	A1	3/2016	Shah et al.
2016/0112798	A1	4/2016	Kim et al.
2016/0174068	A1	6/2016	Chang et al.
2016/0179462	A1	6/2016	Bjorkengren
2016/0239232	A1	8/2016	Chang et al.
2016/0239243	A1	8/2016	Chang et al.
2016/0274839	A1	9/2016	Ohguro et al.
2016/0313974	A1	10/2016	Chang et al.
2016/0314546	A1	10/2016	Malnati et al.
2016/0360341	A1	12/2016	Srivatsa et al.
2017/0006329	A1	1/2017	Jang et al.
2017/0039009	A1	2/2017	Chang et al.
2017/0064746	A1	3/2017	Chang et al.
2017/0075636	A1	3/2017	Chang et al.
2017/0078521	A1	3/2017	Chang et al.
2017/0078922	A1	3/2017	Raleigh et al.
2017/0185376	A1	6/2017	Chang et al.
2017/0228202	A1	8/2017	Chang et al.
2017/0277487	A1	9/2017	Chang et al.
2017/0286027	A1	10/2017	Chang et al.
2017/0318115	A1	11/2017	Peng et al.
2017/0364326	A1	12/2017	Chang et al.
2018/0011667	A1	1/2018	Chang et al.
2018/0024790	A1	1/2018	Chang et al.
2018/0024791	A1	1/2018	Chang et al.
2018/0039456	A1	2/2018	Chang et al.
2018/0039459	A1	2/2018	Chang et al.
2018/0041482	A1	2/2018	Chang et al.
2018/0046418	A1	2/2018	Chang et al.
2018/0107449	A1	4/2018	Krampf et al.
2018/0203647	A1	7/2018	Chang et al.
2018/0203648	A1	7/2018	Chang et al.
2018/0227140	A1	8/2018	Ansari et al.
2018/0253264	A1	9/2018	Chang et al.
2018/0335989	A1	11/2018	Chang et al.
2018/0364929	A9	12/2018	Chang et al.
2018/0370701	A1	12/2018	Maguire
2019/0107980	A1	4/2019	Chang et al.
2019/0121585	A1	4/2019	Chang et al.
2019/0121613	A1	4/2019	Chang et al.
2019/0250883	A1	8/2019	Chang et al.
2019/0272148	A1	9/2019	Chang et al.
2019/0303100	A1	10/2019	Chang et al.
2019/0344944	A1	11/2019	Maguire
2019/0361617	A1	11/2019	Chang et al.
2019/0384547	A1	12/2019	Chang et al.
2020/0097225	A1	3/2020	Chang et al.
2020/0225889	A1	7/2020	Chang et al.

FOREIGN PATENT DOCUMENTS

CN	100334577	C	8/2007
CN	1541370	B	5/2010
CN	101833430	A	9/2010
CN	101834892	A	9/2010
CN	101825996	B	5/2012
EP	0866398	A2	9/1998
EP	0938041	A2	8/1999
EP	738949	B1	2/2002
EP	952513	B1	2/2004
EP	691619	B1	2/2007
GB	2332764	B	11/2002
JP	H11143656	A	5/1999
JP	11316658	A	11/1999
JP	2000132353	A	5/2000
WO	98/17032	A1	4/1998
WO	98/33293	A1	7/1998
WO	98/39766	A1	9/1998
WO	00/51293	A1	8/2000
WO	0195096	A2	12/2001
WO	0195097	A2	12/2001
WO	02084928	A2	10/2002

OTHER PUBLICATIONS

Office Action prepared by the US Patent and Trademark Office for U.S. Appl. No. 15/713,546, dated Nov. 23, 2018, 26 pages.

United States Patent and Trademark Office, Notice of Allowance for U.S. Appl. No. 15/725,220, dated Jan. 24, 2018, 80 pages.

United States Patent and Trademark Office, Office Action for U.S. Appl. No. 15/713,546, dated Feb. 8, 2018, 84 pages.

United States Patent and Trademark Office, Office Action for U.S. Appl. No. 15/726,899, dated Mar. 9, 2018, 85 pages.

United States Patent and Trademark Office, Notice of Allowance for U.S. Appl. No. 15/348,006, dated Mar. 21, 2018, 24 pages.

United States Patent and Trademark Office, Notice of Allowance for U.S. Appl. No. 15/627,197, dated Mar. 21, 2018, 21 pages.

United States Patent and Trademark Office, Notice of Allowance for U.S. Appl. No. 15/494,297, dated Apr. 11, 2018, 22 pages.

(56) **References Cited**

OTHER PUBLICATIONS

United States Patent and Trademark Office, Notice of Allowance for U.S. Appl. No. 15/358,982, dated Jun. 27, 2018, 21 pages.
United States Patent and Trademark Office, Notice of Allowance for U.S. Appl. No. 15/725,220, dated Jul. 2, 2018, 24 pages.
United States Patent and Trademark Office, Notice of Allowance for U.S. Appl. No. 15/332,432, dated Jul. 3, 2018, 19 pages.
United States Patent and Trademark Office, Notice of Allowance for U.S. Appl. No. 15/494,297, dated Jul. 3, 2018, 20 pages.
United States Patent and Trademark Office, Notice of Allowance for U.S. Appl. No. 15/614,441 dated Jul. 5, 2018, 90 pages.
United States Patent and Trademark Office, Office Action for U.S. Appl. No. 15/713,546 dated Jul. 5, 2018, 13 pages.
United States Patent and Trademark Office, Notice of Allowance for U.S. Appl. No. 15/627,197, dated Jul. 13, 2018, 22 pages.
Schulyer et al., "Solutions to Sharing Local Printers: LAN Systems Inc., LANSpool, $395 per Server", PC Week, Oct. 1989, vol. 6, No. 39, pp. 75 (2), 3 pages.
Haynie, Dave, "The Zorro III Bus Specification: A General Purpose Expansion Bus for High Performance Amiga Computers," Mar. 20, 1991, Revision 1.0, pp. 1-84.
House et al., "An on-line communication print service for the demanding client." In Proceedings of the 11th Annual International Conference on Systems Documentation (Waterloo, Ontario, Canada, Oct. 5-8, 1993). SIGDOC 93. ACM, New York, NY, 135-139, 8 pages.
Screenshots from Microsoft® NT™, Figures 5-7, 1998, 3 pages.
Bisdikian et al., "WiSAP: a wireless personal access network for handheld computing devices," Personal Communications, IEEE [see also IEEE Wireless Communications], vol. 5, No. 6, pp. 18-25, Dec. 1998, 9 pages.
Screenshots from Microsoft® Word 2000, Figures 1-4, 1999, 4 pages.
Miller, Brent, "Mapping Salutation Architecture APIs to Bluetooth Service Discovery Layer", Jul. 1, 1999, Version 1.0., 26 pages.
Provisional U.S. Appl. Nos. 60/224,701, 60/227,878, 60/243,654, 60/208,967, 60/220,047, 60/239,320.
Bettstetter et al., "A Comparison of Service Discovery Protocols and Implementation of the Service Location Protocol", Sep. 13-15, 2000, In Proceedings of the 6th EUNICE Open European Summer School: Innovative Internet Applications, 12 pages.
State Intellectual Property Office of The P.R.C., Office action for Chinese Application No. 028069072, dated Jul. 3, 2009, 5 pages.
State Intellectual Property Office of The P.R.C., Office action for Chinese Application No. 201010144809.3, dated Nov. 30, 2010, 18 pages.
State Intellectual Property Office of The P.R.C., Office action for Chinese Application No. 201010144174.7, dated Feb. 23, 2011, 8 pages.
State Intellectual Property Office of The P.R.C., Office action for Chinese Application No. 201010144167.7, dated Apr. 13, 2011, 22 pages.
State Intellectual Property Office of The P.R.C., Notice of Allowance for Chinese Application No. 201010144809.3, dated Jan. 12, 2012, 3 pages.
State Intellectual Property Office of The P.R.C., Office action for Chinese Application No. 201010144174.7, dated Apr. 5, 2012, 6 pages.
State Intellectual Property Office of The P.R.C., Office action for Chinese Application No. 201010144167.7, dated May 3, 2012, 10 pages.
State Intellectual Property Office of The P.R.C., Office action for Chinese Application No. 201010144174.7, dated Nov. 5, 2012, 9 pages.
State Intellectual Property Office of The P.R.C., Office action for Chinese Application No. 201010144167.7, dated Feb. 4, 2013, 7 pages.
State Intellectual Property Office of The P.R.C., Office action for Chinese Application No. 201010144174.7, dated Jul. 24, 2013, 4 pages.
State Intellectual Property Office of The P.R.C., Office action for Chinese Application No. 201010144167.7, dated Feb. 8, 2014, 4 pages.
State Intellectual Property Office of The P.R.C., Office action for Chinese Application No. 201010144174.7, dated Apr. 16, 2014, 7 pages.
State Intellectual Property Office of The P.R.C., Notice of Allowance for Chinese Application No. 201010144167.7, dated Jul. 24, 2014, 3 pages.
United States Patent and Trademark Office, Office Action for U.S. Appl. No. 10/053,765, dated Jul. 13, 2006, 11 pages.
United States Patent and Trademark Office, Office Action for U.S. Appl. No. 10/053,651, dated Aug. 23, 2006, 5 pages.
United States Patent and Trademark Office, Office Action for U.S. Appl. No. 10/053,765, dated Jan. 10, 2008, 20 pages.
United States Patent and Trademark Office, Office Action for U.S. Appl. No. 10/053,765, dated Nov. 25, 2008, 30 pages.
United States Patent and Trademark Office, Notice of Allowance for U.S. Appl. No. 10/053,651, dated Dec. 8, 2008, 11 pages.
United States Patent and Trademark Office, Notice of Allowance for U.S. Appl. No. 10/053,651, dated Mar. 10, 2009, 20 pages.
United States Patent and Trademark Office, Notice of Allowance for U.S. Appl. No. 10/053,651, dated Jun. 15, 2009, 11 pages.
United States Patent and Trademark Office, Office Action for U.S. Appl. No. 10/053,765, dated Jul. 22, 2009, 15 pages.
United States Patent and Trademark Office, Office Action for U.S. Appl. No. 11/929,445, dated Dec. 24, 2009, 12 pages.
United States Patent and Trademark Office, Office Action for U.S. Appl. No. 11/929,501, dated Dec. 24, 2009, 36 pages.
United States Patent and Trademark Office, Office Action for U.S. Appl. No. 10/053,765, dated Mar. 25, 2010, 16 pages.
United States Patent and Trademark Office, Office Action for U.S. Appl. No. 11/929,445, dated Jul. 20, 2010, 15 pages.
United States Patent and Trademark Office, Office Action for U.S. Appl. No. 10/053,765, dated Aug. 6, 2010, 20 pages.
United States Patent and Trademark Office, Office Action for U.S. Appl. No. 11/929,501, dated Aug. 18, 2010, 30 pages.
United States Patent and Trademark Office, Office Action for U.S. Appl. No. 12/783,504, dated Oct. 4, 2010, 14 pages.
United States Patent and Trademark Office, Office Action for U.S. Appl. No. 12/764,015, dated Nov. 12, 2010, 30 pages.
United States Patent and Trademark Office, Office Action for U.S. Appl. No. 12/764,032, dated Dec. 9, 2010, 28 pages.
United States Patent and Trademark Office, Office Action for U.S. Appl. No. 12/581,868, dated Dec. 20, 2010, 16 pages.
United States Patent and Trademark Office, Office Action for U.S. Appl. No. 12/606,178, dated Jan. 20, 2011, 19 pages.
United States Patent and Trademark Office, Office Action for U.S. Appl. No. 11/929,445, dated Feb. 15, 2011, 13 pages.
United States Patent and Trademark Office, Office Action for U.S. Appl. No. 11/929,501, dated Feb. 17, 2011, 26 pages.
United States Patent and Trademark Office, Office Action for U.S. Appl. No. 10/053,765, dated Apr. 12, 2011, 18 pages.
United States Patent and Trademark Office, Office Action for U.S. Appl. No. 12/783,504, dated Apr. 15, 2011, 17 pages.
United States Patent and Trademark Office, Office Action for U.S. Appl. No. 12/764,032, dated Jun. 27, 2011, 28 pages.
United States Patent and Trademark Office, Office Action for U.S. Appl. No. 12/764,015, dated Jul. 12, 2011, 31 pages.
United States Patent and Trademark Office, Notice of Allowance for U.S. Appl. No. 12/581,868, dated Sep. 2, 2011, 6 pages.
United States Patent and Trademark Office, Notice of Allowance for U.S. Appl. No. 12/606,178, dated Sep. 7, 2011, 15 pages.
United States Patent and Trademark Office, Notice of Allowance for U.S. Appl. No. 10/053,765, dated Nov. 10, 2011, 11 pages.
United States Patent and Trademark Office, Notice of Allowance for U.S. Appl. No. 12/581,868, dated Jan. 20, 2012, 35 pages.
United States Patent and Trademark Office, Notice of Allowance for U.S. Appl. No. 12/606,178, dated Jan. 27, 2012, 75 pages.
United States Patent and Trademark Office, Office Action for U.S. Appl. No. 12/783,504, dated Mar. 30, 2012, 17 pages.
United States Patent and Trademark Office, Office Action for U.S. Appl. No. 12/764,015, dated Apr. 24, 2012, 17 pages.

(56) **References Cited**

OTHER PUBLICATIONS

United States Patent and Trademark Office, Office Action for U.S. Appl. No. 11/929,445, dated Apr. 25, 2012, 17 pages.
United States Patent and Trademark Office, Office Action for U.S. Appl. No. 12/764,032, dated Apr. 25, 2012, 18 pages.
United States Patent and Trademark Office, Notice of Allowance for U.S. Appl. No. 10/053,765, dated May 23, 2012, 71 pages.
United States Patent and Trademark Office, Office Action for U.S. Appl. No. 11/929,501, dated Jun. 13, 2012, 38 pages.
United States Patent and Trademark Office, Notice of Allowance for U.S. Appl. No. 10/053,765, dated Sep. 14, 2012, 41 pages.
United States Patent and Trademark Office, Office Action for U.S. Appl. No. 11/929,445, dated Nov. 21, 2012, 21 pages.
United States Patent and Trademark Office, Office Action for U.S. Appl. No. 12/764,032, dated Nov. 21, 2012, 22 pages.
United States Patent and Trademark Office, Office Action for U.S. Appl. No. 12/783,504, dated Nov. 21, 2012, 25 pages.
United States Patent and Trademark Office, Office Action for U.S. Appl. No. 12/764,015, dated Dec. 18, 2012, 22 pages.
United States Patent and Trademark Office, Notice of Allowance for U.S. Appl. No. 11/929,501, dated Jan. 3, 2013, 20 pages.
United States Patent and Trademark Office, Notice of Allowance for U.S. Appl. No. 10/053,765, dated Jan. 30, 2013, 34 pages.
United States Patent and Trademark Office, Notice of Allowance for U.S. Appl. No. 11/929,501, dated Apr. 12, 2013, 51 pages.
United States Patent and Trademark Office, Notice of Allowance for U.S. Appl. No. 10/053,765, dated May 15, 2013, 38 pages.
United States Patent and Trademark Office, Office Action for U.S. Appl. No. 12/783,504, dated Jul. 8, 2013, 39 pages.
United States Patent and Trademark Office, Office Action for U.S. Appl. No. 12/764,015, dated Aug. 23, 2013, 36 pages.
United States Patent and Trademark Office, Notice of Allowance for U.S. Appl. No. 10/053,765, dated Sep. 3, 2013, 21 pages.
United States Patent and Trademark Office, Notice of Allowance for U.S. Appl. No. 11/929,501, dated Sep. 3, 2013, 19 pages.
United States Patent and Trademark Office, Office Action for U.S. Appl. No. 11/929,445, dated Sep. 23, 2013, 24 pages.
United States Patent and Trademark Office, Office Action for U.S. Appl. No. 12/764,032, dated Oct. 1, 2013, 50 pages.
United States Patent and Trademark Office, Office Action for U.S. Appl. No. 13/476,947, dated Dec. 23, 2013, 20 pages.
United States Patent and Trademark Office, Notice of Allowance for U.S. Appl. No. 10/053,765, dated Jan. 7, 2014, 22 pages.
United States Patent and Trademark Office, Office Action for U.S. Appl. No. 11/929,445, dated Feb. 11, 2014, 31 pages.
United States Patent and Trademark Office, Notice of Allowance for U.S. Appl. No. 13/477,987, dated Feb. 25, 2014, 104 pages.
United States Patent and Trademark Office, Office Action for U.S. Appl. No. 12/783,504, dated Mar. 6, 2014, 29 pages.
United States Patent and Trademark Office, Notice of Allowance for U.S. Appl. No. 12/764,015, dated Apr. 4, 2014, 54 pages.
United States Patent and Trademark Office, Notice of Allowance for U.S. Appl. No. 12/764,032, dated Apr. 24, 2014, 65 pages.
United States Patent and Trademark Office, Notice of Allowance for U.S. Appl. No. 12/764,015, dated Apr. 28, 2014, 51 pages.
United States Patent and Trademark Office, Notice of Allowance for U.S. Appl. No. 10/053,765, dated May 9, 2014, 64 pages.
United States Patent and Trademark Office, Notice of Allowance for U.S. Appl. No. 13/477,987, dated Jun. 6, 2014, 26 pages.
United States Patent and Trademark Office, Notice of Allowance for U.S. Appl. No. 11/929,445, dated Jun. 25, 2014, 61 pages.
United States Patent and Trademark Office, Office Action for U.S. Appl. No. 13/476,947, dated Jun. 26, 2014, 85 pages.
United States Patent and Trademark Office, Notice of Allowance for U.S. Appl. No. 12/783,504, dated Aug. 29, 2014, 78 pages.
United States Patent and Trademark Office, Notice of Allowance for U.S. Appl. No. 12/764,015, dated Sep. 11, 2014, 29 pages.
United States Patent and Trademark Office, Notice of Allowance for U.S. Appl. No. 10/053,765, dated Sep. 12, 2014, 25 pages.
United States Patent and Trademark Office, Notice of Allowance for U.S. Appl. No. 12/764,032, dated Sep. 12, 2014, 29 pages.
United States Patent and Trademark Office, Notice of Allowance for U.S. Appl. No. 13/477,987, dated Sep. 26, 2014, 42 pages.
United States Patent and Trademark Office, Notice of Allowance for U.S. Appl. No. 11/929,445, dated Oct. 24, 2014, 33 pages.
United States Patent and Trademark Office, Notice of Allowance for U.S. Appl. No. 12/783,504, dated Nov. 7, 2014, 45 pages.
United States Patent and Trademark Office, Notice of Allowance for U.S. Appl. No. 12/764,015, dated Dec. 18, 2014, 29 pages.
United States Patent and Trademark Office, Notice of Allowance for U.S. Appl. No. 10/053,765, dated Dec. 29, 2014, 50 pages.
United States Patent and Trademark Office, Office Action for U.S. Appl. No. 15/358,982, dated Nov. 16, 2017, 89 pages.
United States Patent and Trademark Office, Office Action for U.S. Appl. No. 15/332,432, dated Nov. 30, 2017, 94 pages.
United States Patent and Trademark Office, Notice of Allowance for U.S. Appl. No. 15/627,197, dated Dec. 19, 2017, 42 pages.
United States Patent and Trademark Office, Notice of Allowance for U.S. Appl. No. 15/348,006, dated Dec. 29, 2017, 92 pages.
United States Patent and Trademark Office, Notice of Allowance for U.S. Appl. No. 15/494,297, dated Jan. 2, 2018, 83 pages.
United States Patent and Trademark Office, Notice of Allowance for U.S. Appl. No. 10/053,765, dated Jun. 14, 2017, 16 pages.
United States Patent and Trademark Office, Notice of Allowance for U.S. Appl. No. 15/359,147, dated Jul. 25, 2017, 13 pages.
United States Patent and Trademark Office, Notice of Allowance for U.S. Appl. No. 15/051,534, dated Jul. 27, 2017, 18 pages.
United States Patent and Trademark Office, Notice of Allowance for U.S. Appl. No. 12/764,032, dated Dec. 31, 2014, 38 pages.
United States Patent and Trademark Office, Notice of Allowance for U.S. Appl. No. 13/476,947, dated Jan. 8, 2015, 55 pages.
United States Patent and Trademark Office, Supplemental Notice of Allowability for U.S. Appl. No. 13/477,987, dated Jan. 21, 2015, 7 pages.
United States Patent and Trademark Office, Corrected Notice of Allowability for U.S. Appl. No. 12/783,504, dated Mar. 5, 2015, 26 pages.
United States Patent and Trademark Office, Notice of Allowance for U.S. Appl. No. 10/053,765, dated Apr. 13, 2015, 19 pages.
United States Patent and Trademark Office, Notice of Allowance for U.S. Appl. No. 12/783,504, dated Apr. 24, 2015, 36 pages.
United States Patent and Trademark Office, Notice of Allowance for U.S. Appl. No. 10/053,765, dated Nov. 23, 2015, 49 pages.
United States Patent and Trademark Office, Notice of Allowance for U.S. Appl. No. 10/053,765, dated Mar. 10, 2016, 48 pages.
United States Patent and Trademark Office, Notice of Allowance for U.S. Appl. No. 10/053,765, dated Jun. 29, 2016, 17 pages.
United States Patent and Trademark Office, Office Action for U.S. Appl. No. 15/051,534, dated Sep. 15, 2016, 77 pages.
United States Patent and Trademark Office, Notice of Allowance for U.S. Appl. No. 10/053,765, dated Oct. 20, 2016, 21 pages.
United States Patent and Trademark Office, Office Action for U.S. Appl. No. 15/359,147, dated Dec. 30, 2016, 76 pages.
United States Patent and Trademark Office, Notice of Allowance for U.S. Appl. No. 10/053,765, dated Feb. 14, 2017, 17 pages.
United States Patent and Trademark Office, Office Action for U.S. Appl. No. 15/051,534, dated May 4, 2017, 12 pages.
Office Action prepared by the US Patent and Trademark Office for U.S. Appl. No. 15/458,750, dated Jan. 23, 2019, 106 pages.
Office Action prepared by the US Patent and Trademark Office for U.S. Appl. No. 15/697,247, dated Feb. 25, 2019, 117 pages.
Office Action prepared by the US Patent and Trademark Office for U.S. Appl. No. 15/726,899, dated Mar. 4, 2019, 37 pages.
Office Action prepared by the US Patent and Trademark Office for U.S. Appl. No. 15/713,546, dated Mar. 29, 2019, 30 pages.
Office Action prepared by the US Patent and Trademark Office for U.S. Appl. No. 15/710,711, dated May 13, 2019, 107 pages.
Office Action prepared by the US Patent and Trademark Office for U.S. Appl. No. 15/697,247, dated May 24, 2019, 38 pages.
Office Action prepared by the U.S. Patent and Trademark Office for U.S. Appl. No. 15/713,546, dated Aug. 1, 2019, 30 pages.

(56) **References Cited**

OTHER PUBLICATIONS

Office Action prepared by the U.S. Patent and Trademark Office for U.S. Appl. No. 15/726,899, dated Aug. 1, 2019, 36 pages.
Office Action prepared by the U.S. Patent and Trademark Office for U.S. Appl. No. 15/458,750, dated Aug. 8, 2019, 26 pages.
Notice of Allowance prepared by the U.S. Patent and Trademark Office for U.S. Appl. No. 15/697,247, dated Sep. 13, 2019, 22 pages.
Office Action prepared by the U.S. Patent and Trademark Office for U.S. Appl. No. 16/557,593, dated Oct. 3, 2019, 11 pages.
Office Action prepared by the U.S. Patent and Trademark Office for U.S. Appl. No. 16/051,371, dated Oct. 3, 2019, 87 pages.
Office Action prepared by the U.S. Patent and Trademark Office for U.S. Appl. No. 15/713,546, dated Dec. 11, 2019, 24 pages.
Office Action prepared by the U.S. Patent and Trademark Office for U.S. Appl. No. 15/726,899, dated Dec. 11, 2019, 38 pages.
Albrecht et al., "IP Services over Bluetooth: Leading the Way to a New Mobility," IEEE Proceedings of 24th Conference on Local Computer Networks, Lowell, MA, Oct. 18-20, 1999, 10 pages.
Office Action prepared by the U.S. Patent and Trademark Office for U.S. Appl. No. 15/458,750, dated Dec. 31, 2019, 28 pages.
Office Action prepared by the U.S. Patent and Trademark Office for U.S. Appl. No. 16/557,593, dated Feb. 28, 2020, 108 pages.
Office Action prepared by the U.S. Patent and Trademark Office for U.S. Appl. No. 15/713,546, dated Mar. 31, 2020, 29 pages.
Notice of Allowance prepared by the U.S. Patent and Trademark Office for U.S. Appl. No. 16/051,371, dated May 13, 2020, 24 pages.
Notice of Allowance prepared by the U.S. Patent and Trademark Office for U.S. Appl. No. 15/726,899, dated May 26, 2020, 30 pages.
Final Office Action prepared by the U.S. Patent and Trademark Office for U.S. Appl. No. 15/458,750, dated Jun. 25, 2020, 28 pages.
Notice of Allowance prepared by the U.S. Patent and Trademark Office for U.S. Appl. No. 16/557,593, dated Jul. 15, 2020, 25 pages.
International Telecommunication Union, "Series T: Terminals for Telematic Services, Mixed Raster Content (MRC)", Apr. 1999, 55 pages.
Bluetooth, Core, "Specification of the Bluetooth System," Dec. 1, 1999, 1080 pages (attachments are in 4 parts).
Notice of Allowance prepared by the U.S. Patent and Trademark Office for U.S. Appl. No. 15/713,546, dated Aug. 5, 2020, 25 pages.
Notice of Allowance prepared by the U.S. Patent and Trademark Office for U.S. Appl. No. 16/200,380, dated Aug. 6, 2020, 108 pages.

* cited by examiner

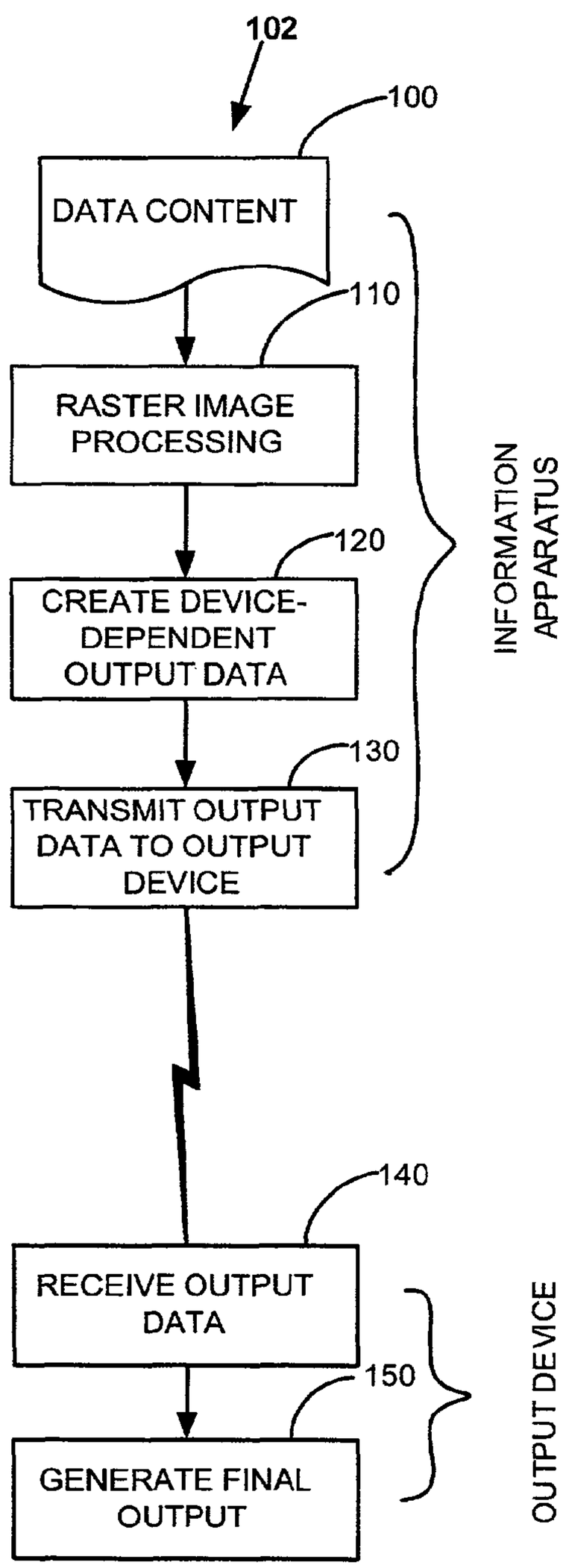
102
100
DATA CONTENT
110
RASTER IMAGE PROCESSING
120
CREATE DEVICE-DEPENDENT OUTPUT DATA
130
TRANSMIT OUTPUT DATA TO OUTPUT DEVICE
INFORMATION APPARATUS
140
RECEIVE OUTPUT DATA
150
GENERATE FINAL OUTPUT
OUTPUT DEVICE

FIG 1 A

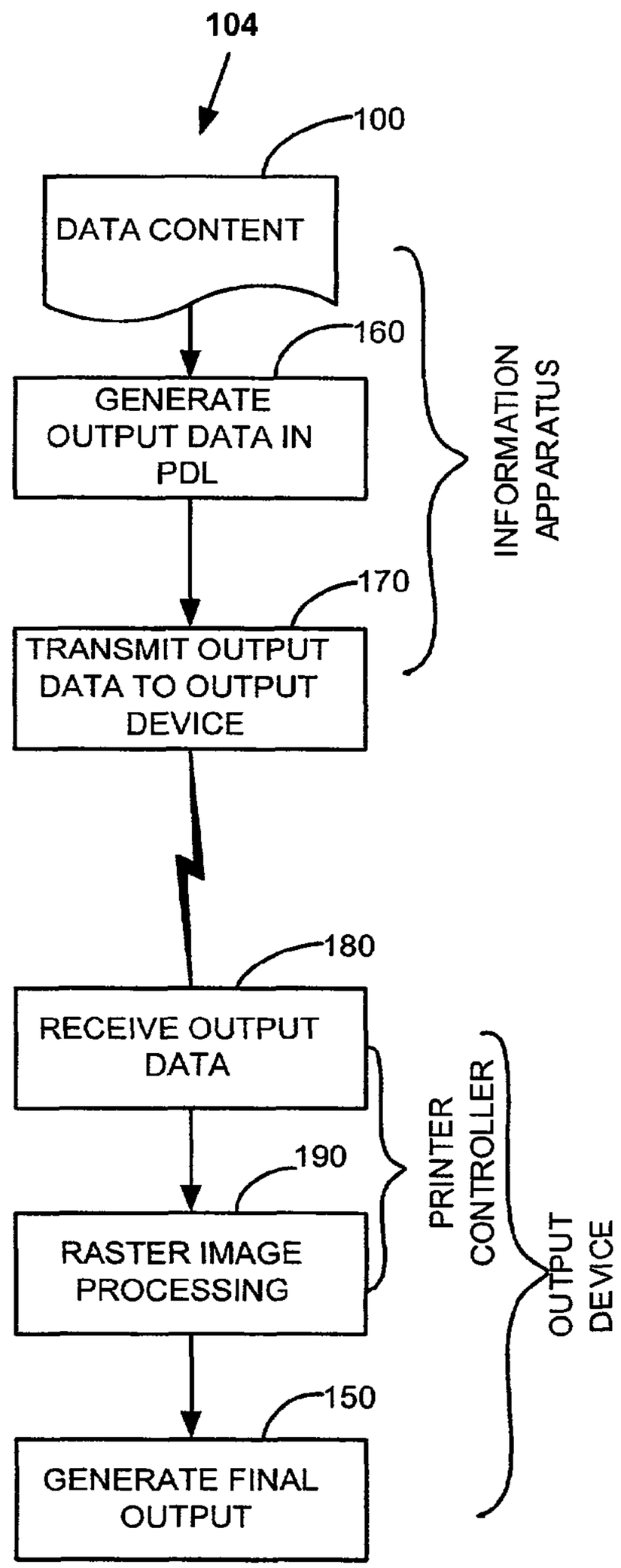
104
100
DATA CONTENT
160
GENERATE OUTPUT DATA IN PDL
170
TRANSMIT OUTPUT DATA TO OUTPUT DEVICE
INFORMATION APPARATUS
180
RECEIVE OUTPUT DATA
190
RASTER IMAGE PROCESSING
PRINTER CONTROLLER
150
GENERATE FINAL OUTPUT
OUTPUT DEVICE

FIG 1 B

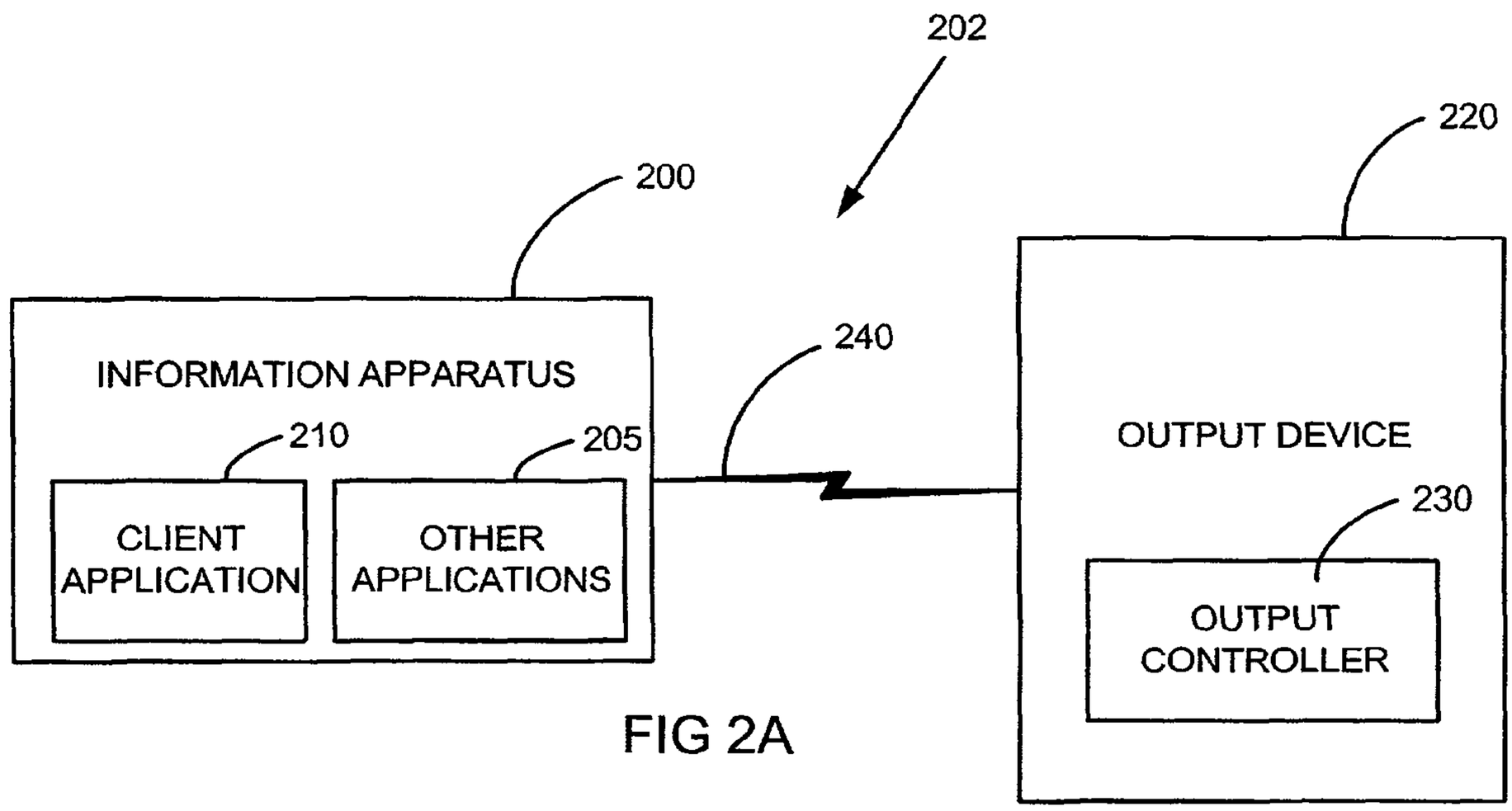
202
200
220
240
INFORMATION APPARATUS
210
205
CLIENT APPLICATION
OTHER APPLICATIONS
OUTPUT DEVICE
230
OUTPUT CONTROLLER

FIG 2A

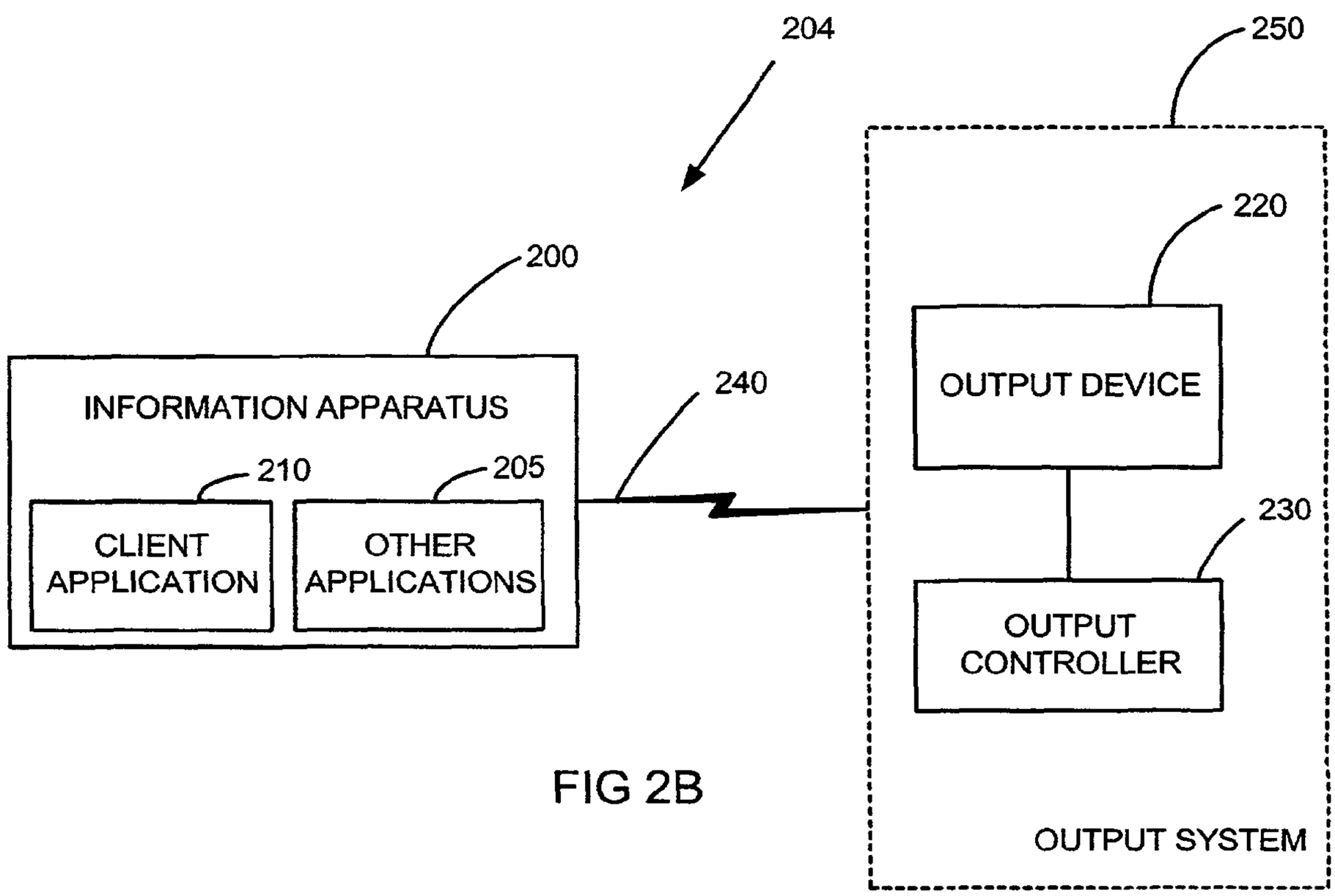
204
250
220
200
240
INFORMATION APPARATUS
210
205
CLIENT APPLICATION
OTHER APPLICATIONS
OUTPUT DEVICE
230
OUTPUT CONTROLLER
OUTPUT SYSTEM

FIG 2B

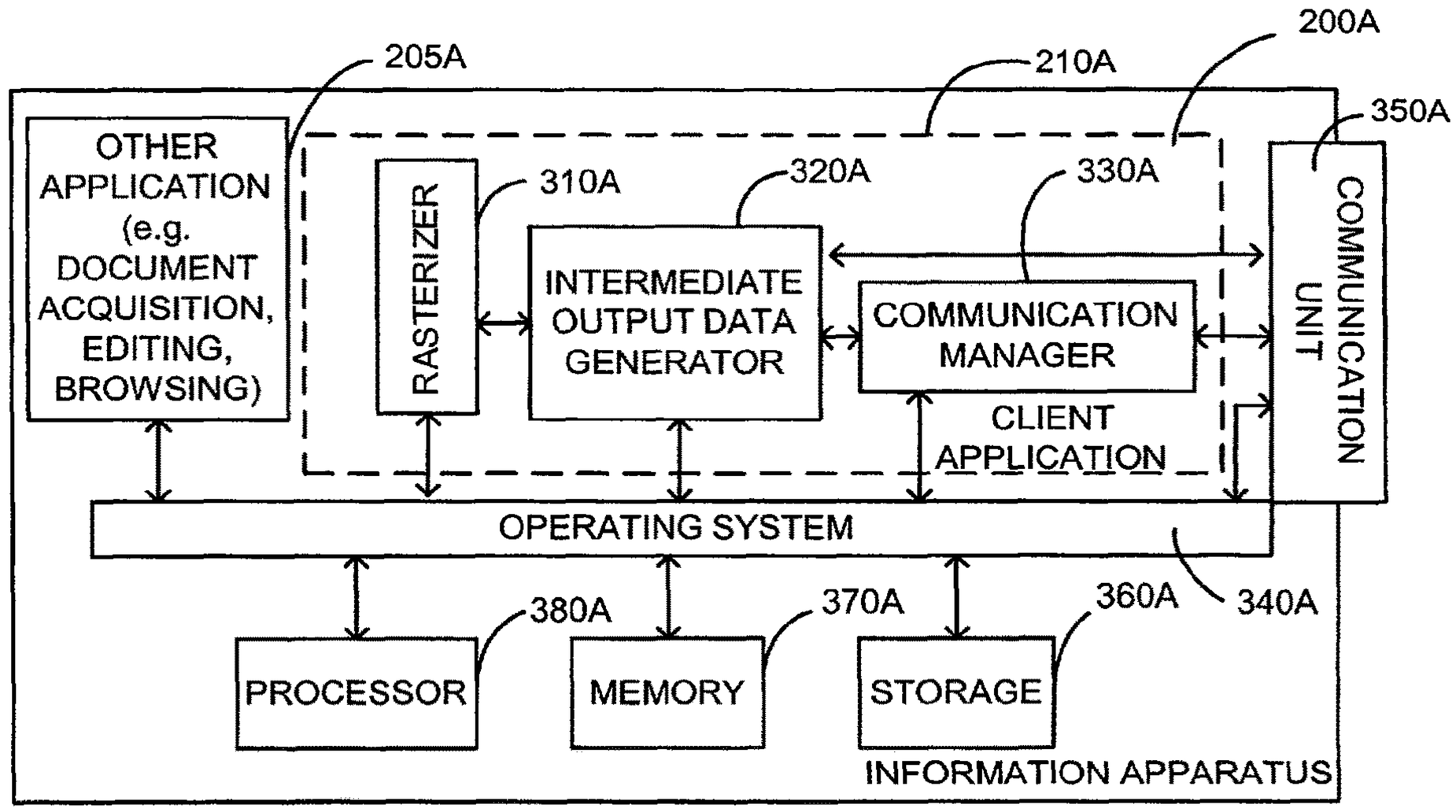
200A
205A
210A
350A
OTHER APPLICATION (e.g. DOCUMENT ACQUISITION, EDITING, BROWSING)
RASTERIZER
310A
320A
330A
INTERMEDIATE OUTPUT DATA GENERATOR
COMMUNICATION MANAGER
COMMUNICATION UNIT
CLIENT APPLICATION
OPERATING SYSTEM
340A
380A
370A
360A
PROCESSOR
MEMORY
STORAGE
INFORMATION APPARATUS

FIG 3A

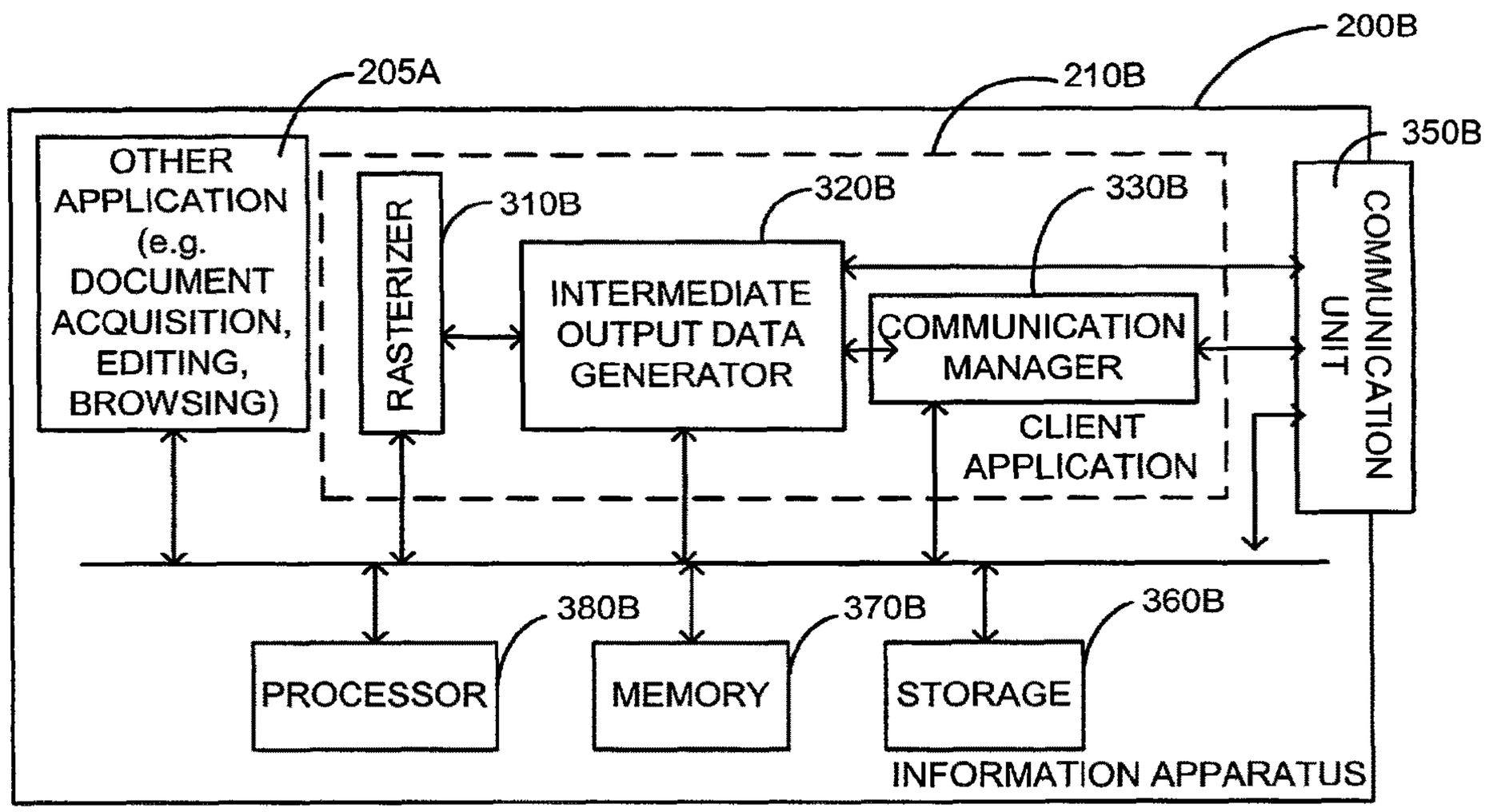
200B
205A
210B
350B
OTHER APPLICATION (e.g. DOCUMENT ACQUISITION, EDITING, BROWSING)
RASTERIZER
310B
320B
330B
INTERMEDIATE OUTPUT DATA GENERATOR
COMMUNICATION MANAGER
COMMUNICATION UNIT
CLIENT APPLICATION
380B
370B
360B
PROCESSOR
MEMORY
STORAGE
INFORMATION APPARATUS

FIG 3B

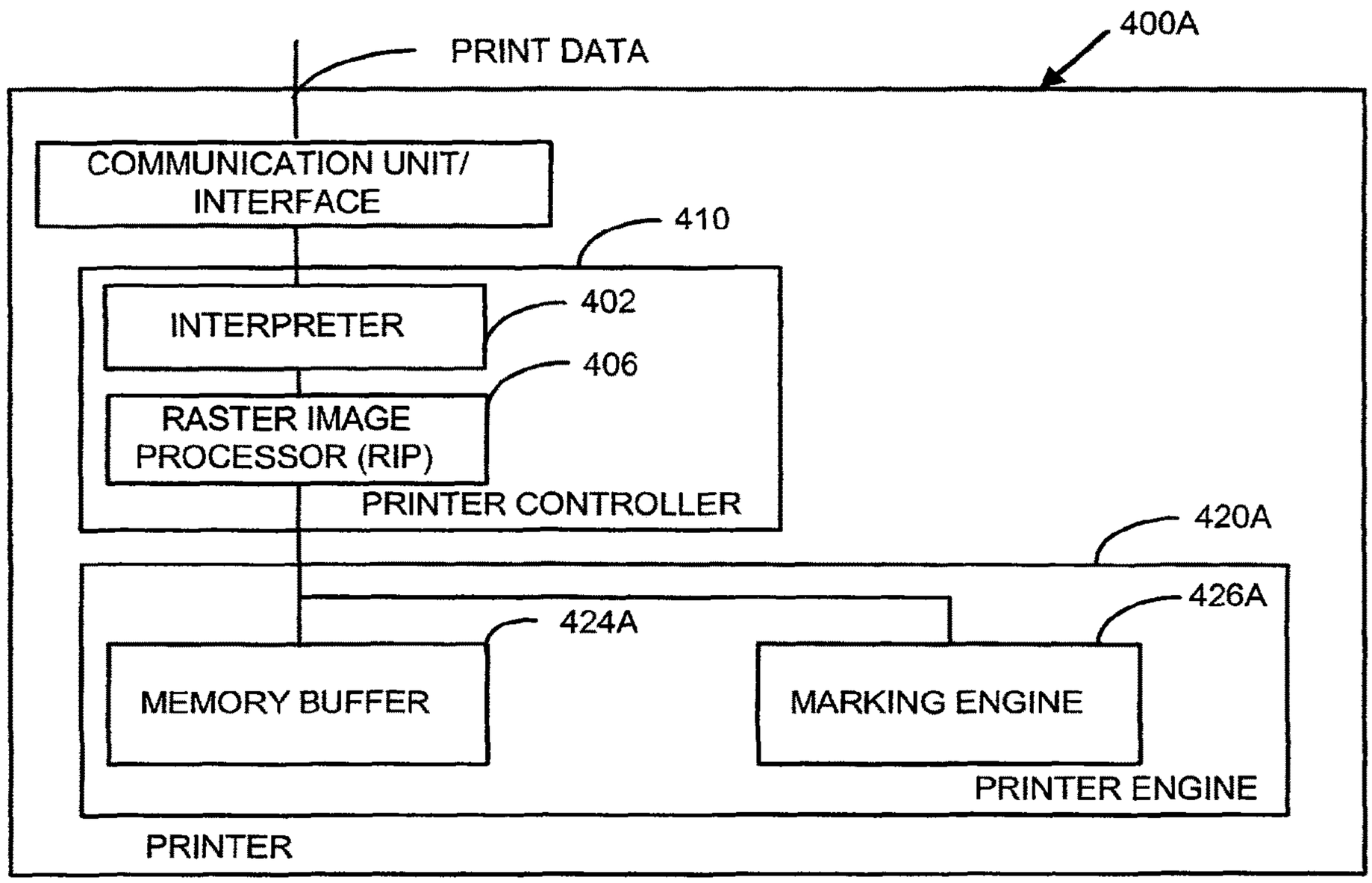
400A
PRINT DATA
COMMUNICATION UNIT/
INTERFACE
410
INTERPRETER
402
406
RASTER IMAGE
PROCESSOR (RIP)
PRINTER CONTROLLER
420A
426A
424A
MEMORY BUFFER
MARKING ENGINE
PRINTER ENGINE
PRINTER

Fig. 4 A

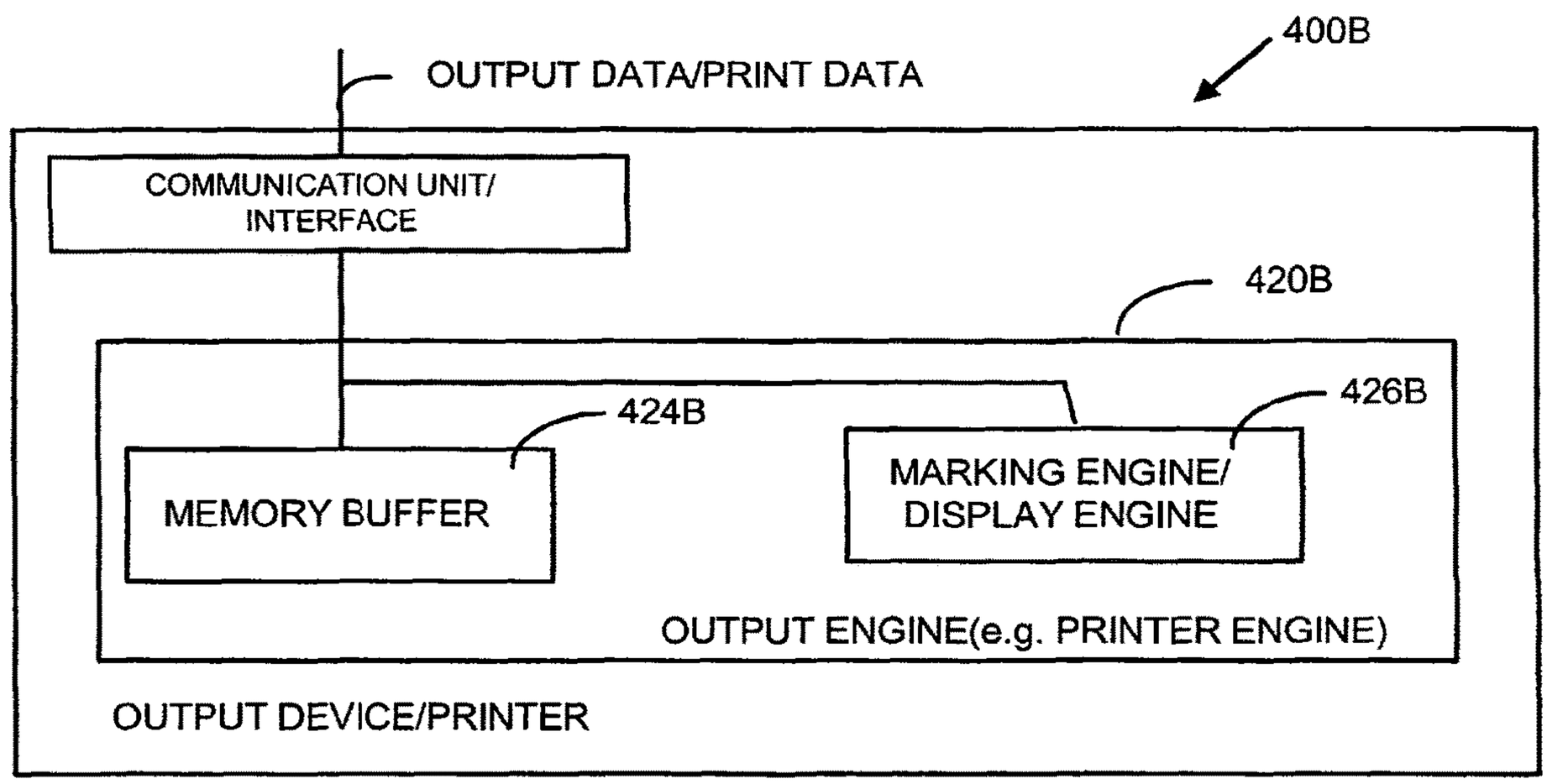
400B
OUTPUT DATA/PRINT DATA
COMMUNICATION UNIT/
INTERFACE
420B
426B
424B
MEMORY BUFFER
MARKING ENGINE/
DISPLAY ENGINE
OUTPUT ENGINE(e.g. PRINTER ENGINE)
OUTPUT DEVICE/PRINTER

Fig. 4 B

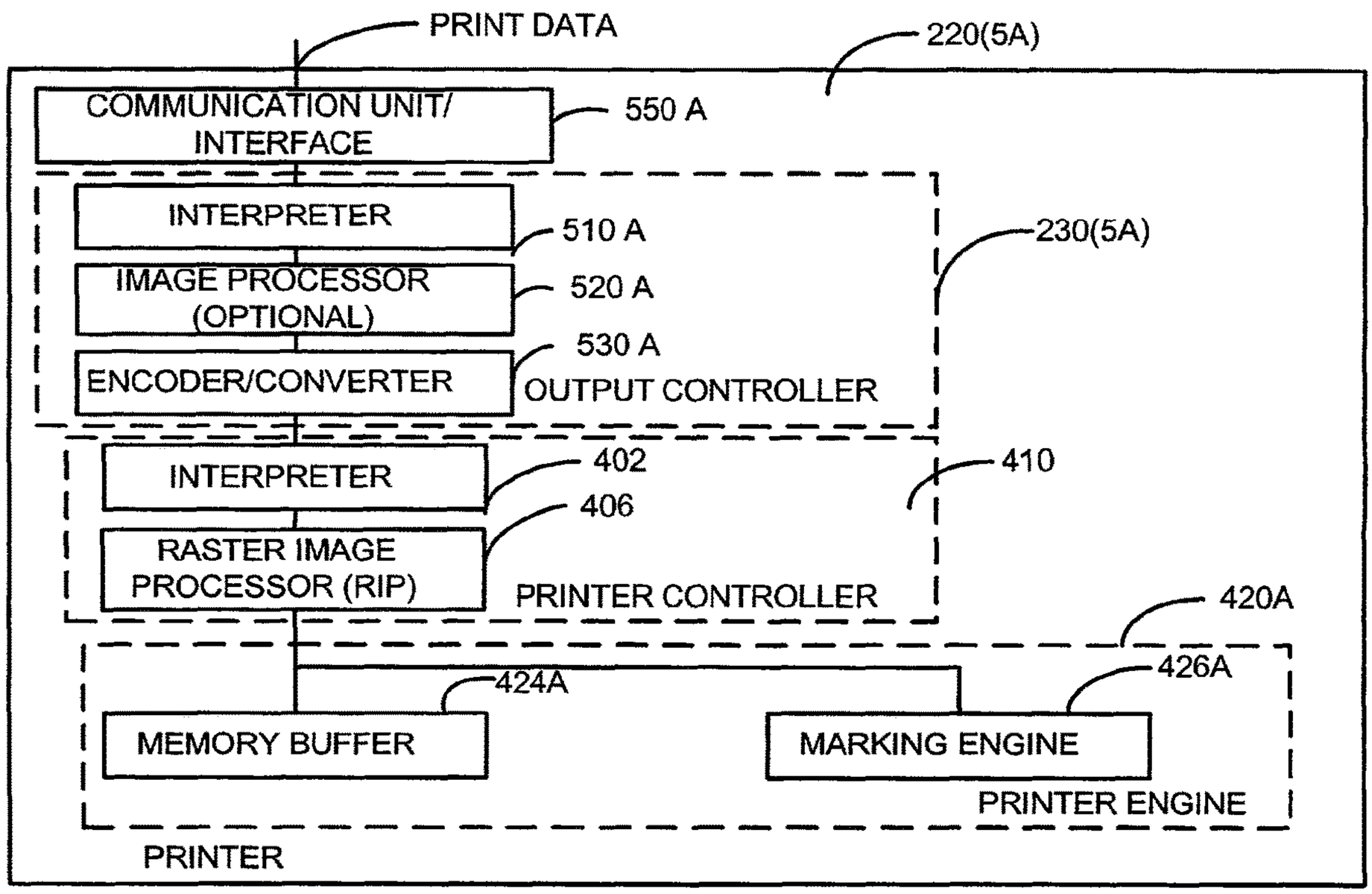
PRINT DATA
220(5A)
COMMUNICATION UNIT/ INTERFACE
550 A
INTERPRETER
510 A
230(5A)
IMAGE PROCESSOR (OPTIONAL)
520 A
530 A
ENCODER/CONVERTER
OUTPUT CONTROLLER
INTERPRETER
402
410
406
RASTER IMAGE PROCESSOR (RIP)
PRINTER CONTROLLER
420A
424A
426A
MEMORY BUFFER
MARKING ENGINE
PRINTER ENGINE
PRINTER

Fig. 5 A

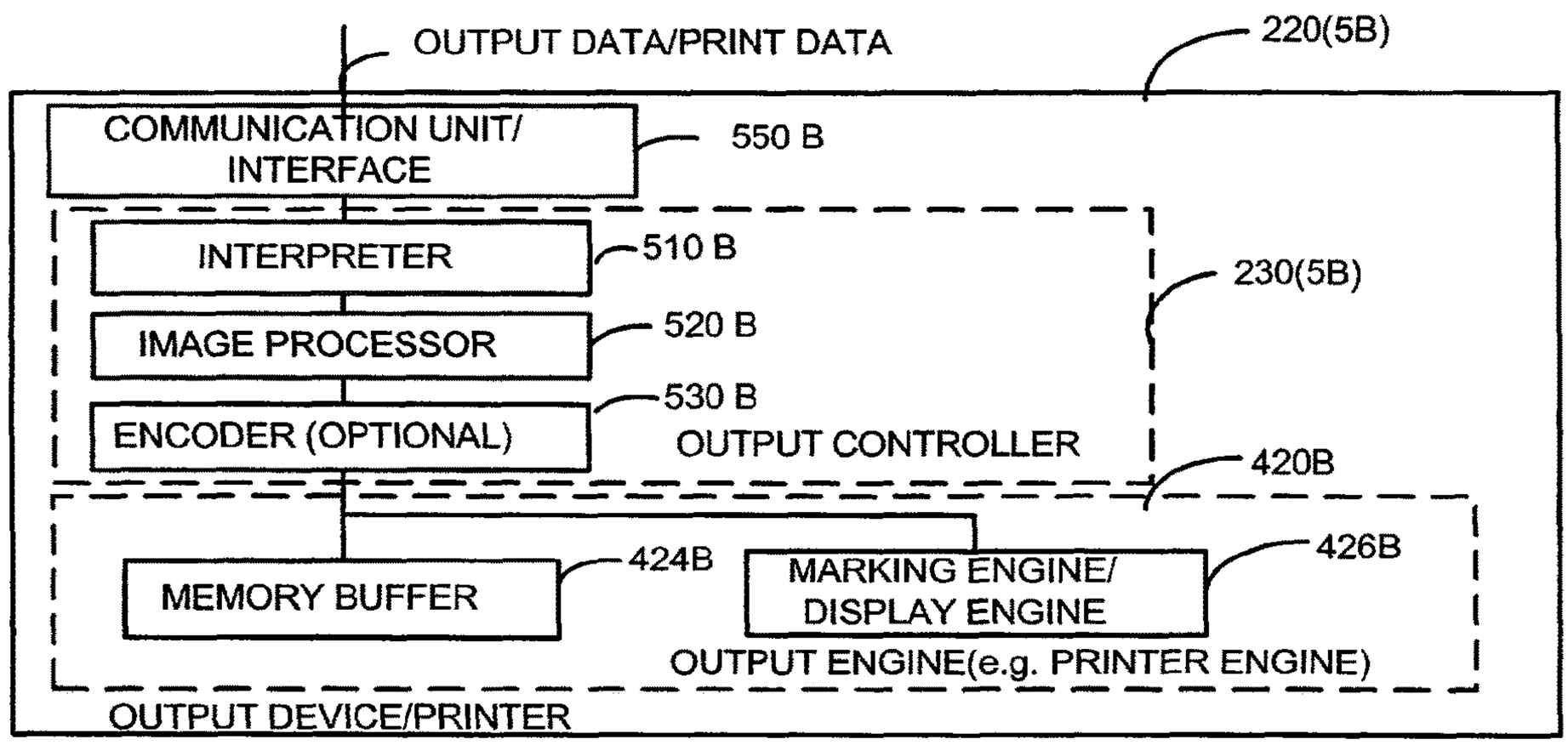
OUTPUT DATA/PRINT DATA
220(5B)
COMMUNICATION UNIT/ INTERFACE
550 B
INTERPRETER
510 B
230(5B)
IMAGE PROCESSOR
520 B
530 B
ENCODER (OPTIONAL)
OUTPUT CONTROLLER
420B
424B
426B
MEMORY BUFFER
MARKING ENGINE/ DISPLAY ENGINE
OUTPUT ENGINE(e.g. PRINTER ENGINE)
OUTPUT DEVICE/PRINTER

Fig. 5 B

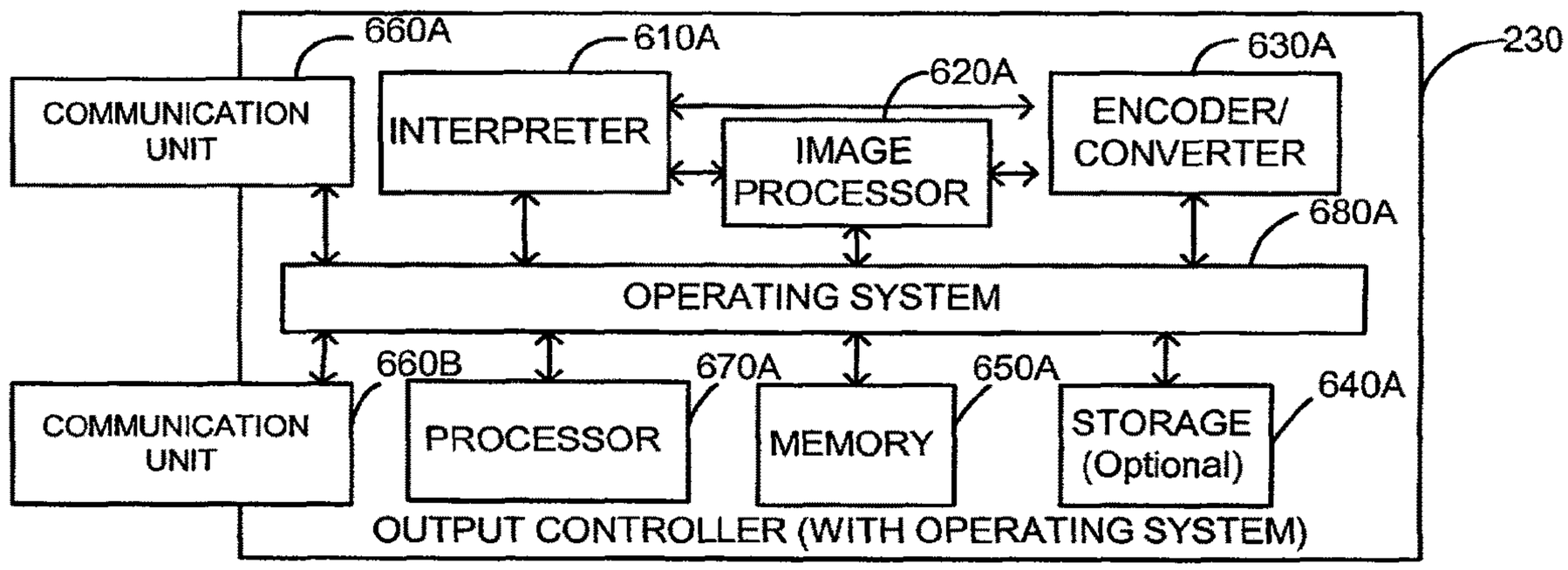

Fig 6 A

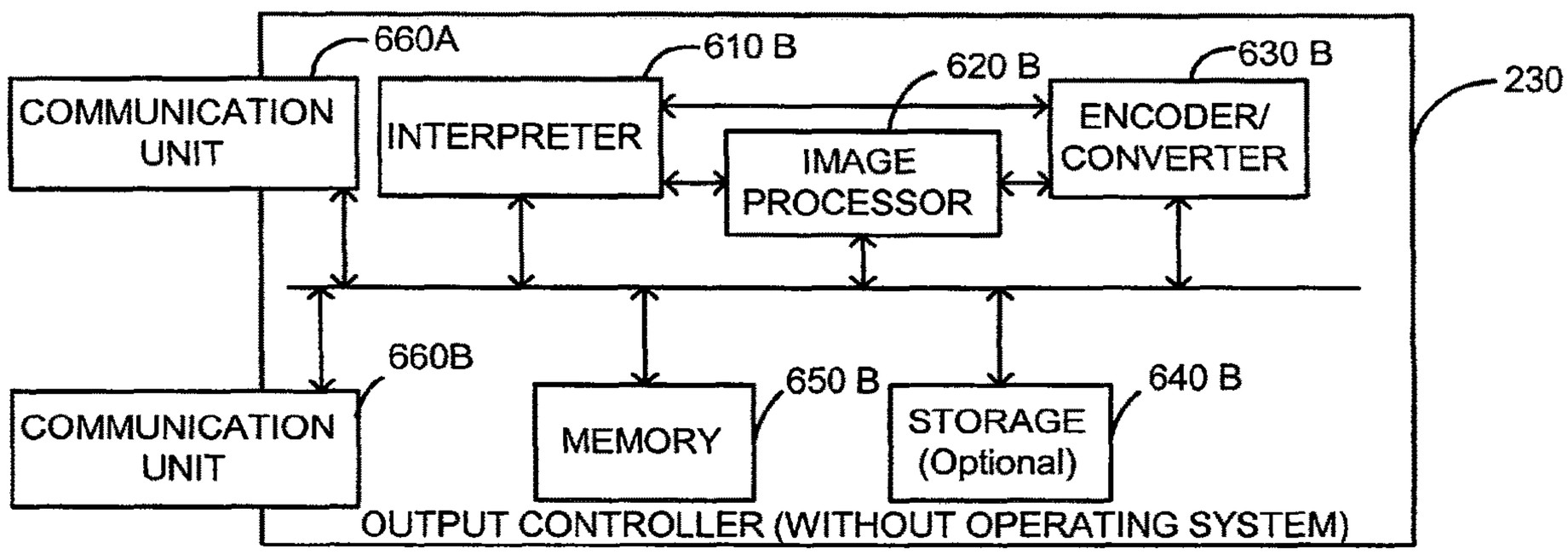

FIG 6 B

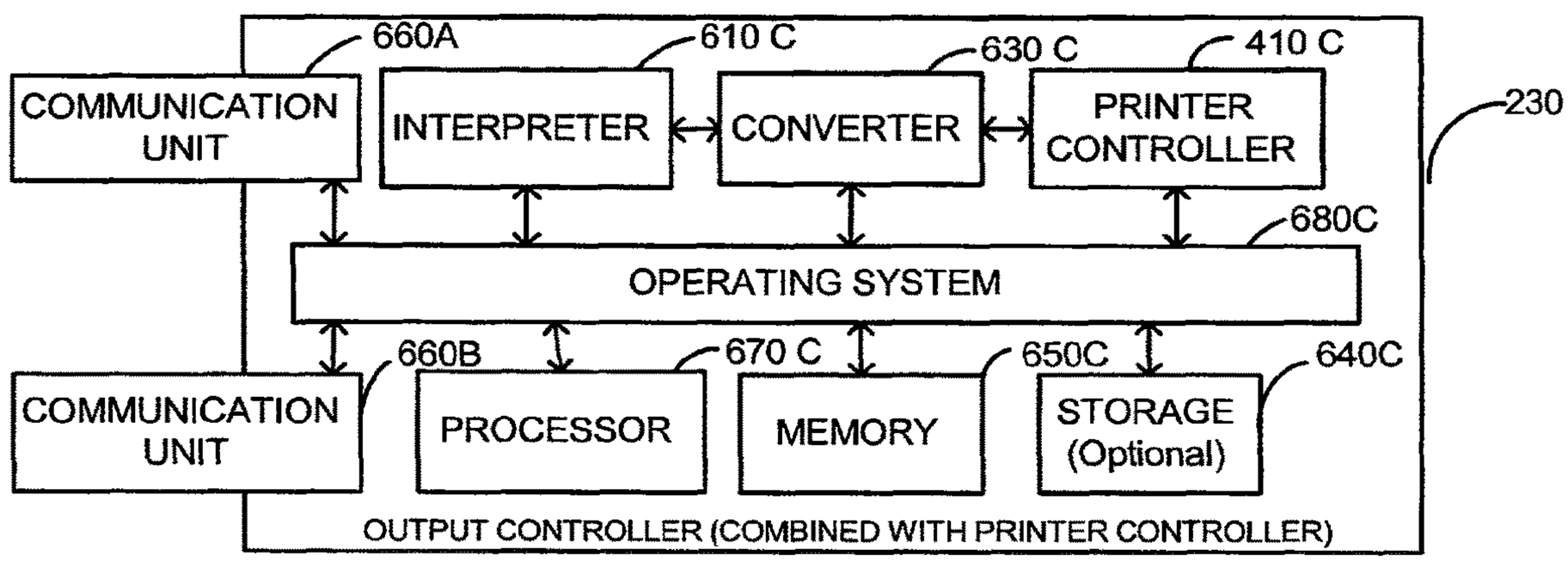

FIG 6 C

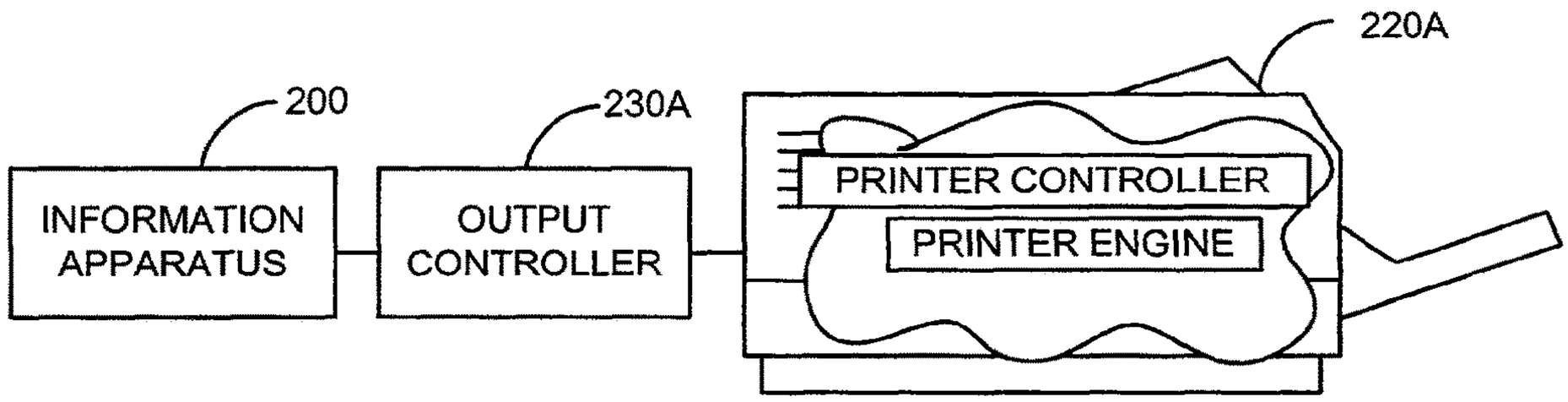

Fig. 7A

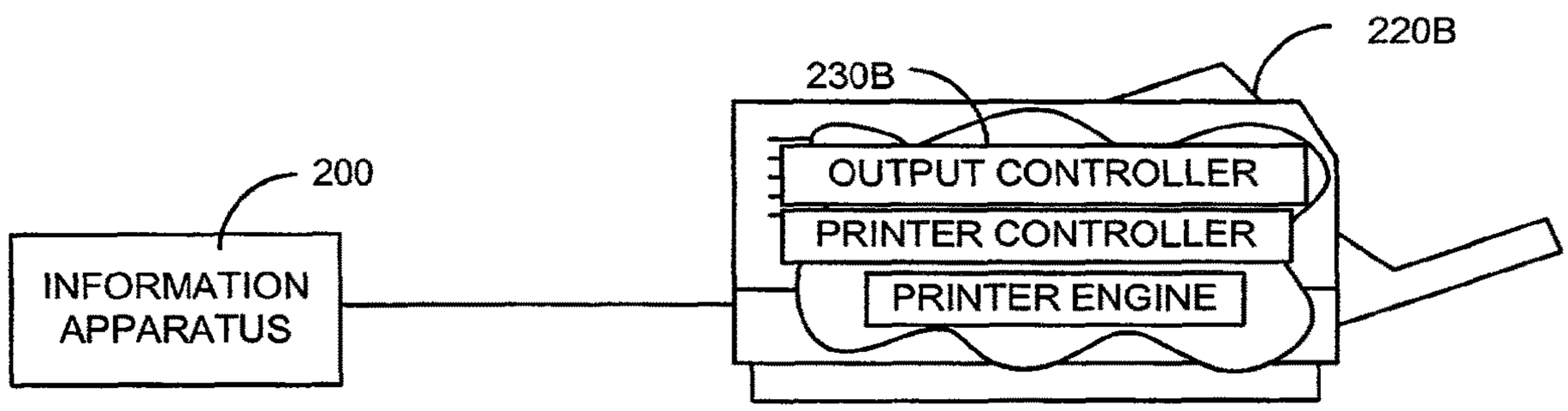

Fig. 7B

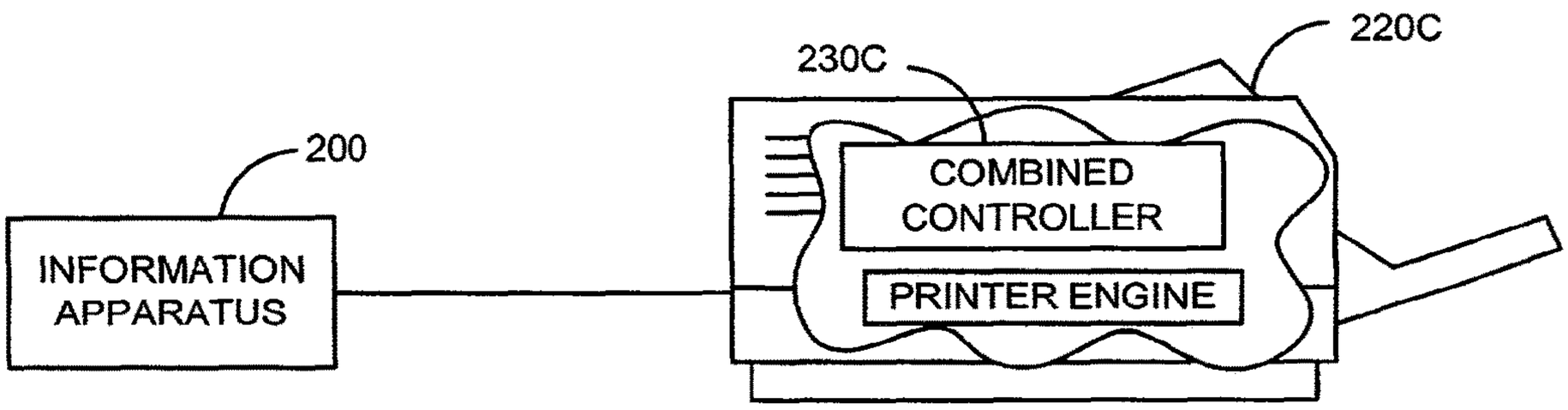

Fig. 7C

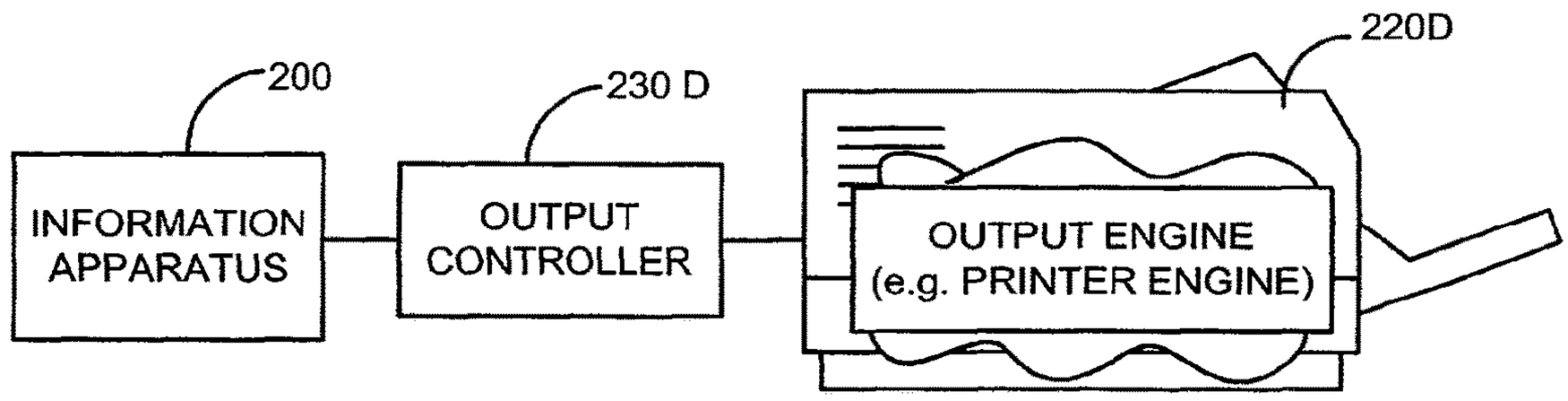

FIG 7D

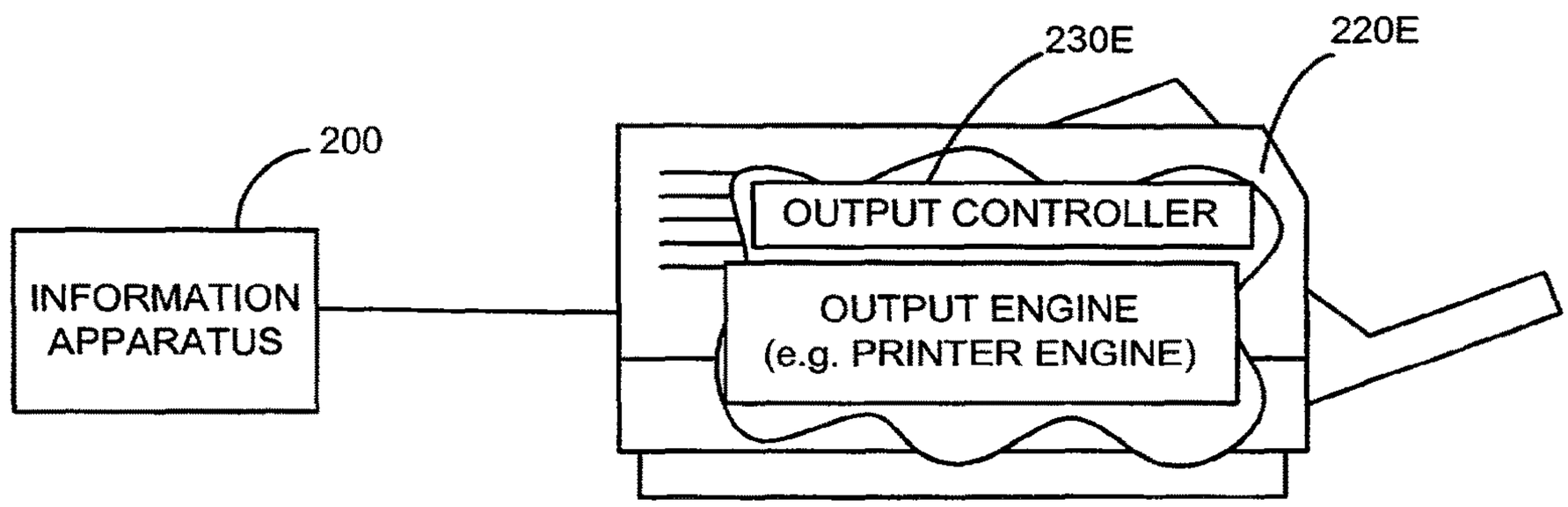

FIG 7E

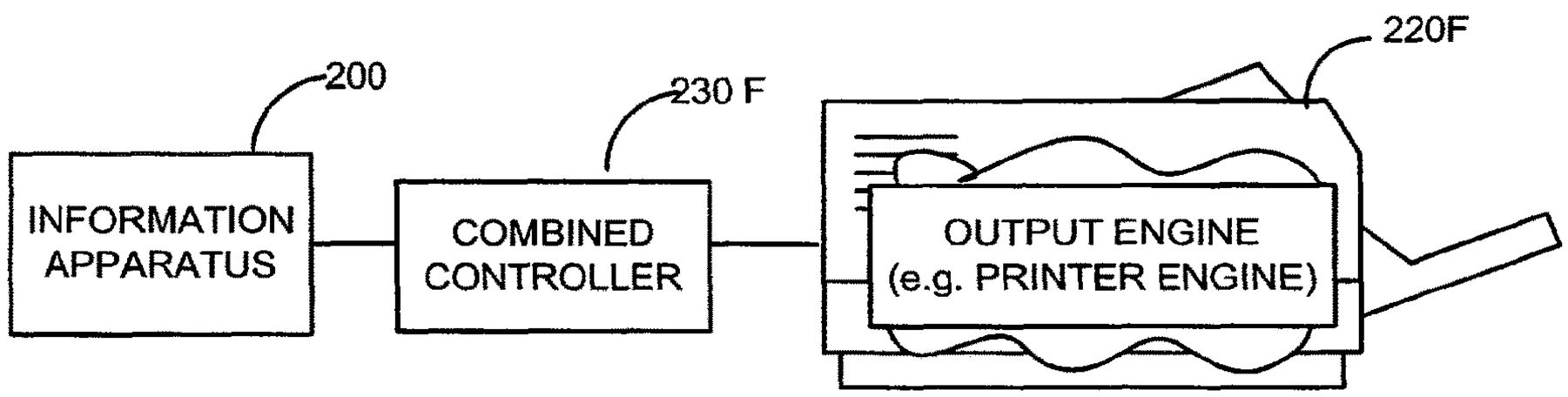

FIG 7F

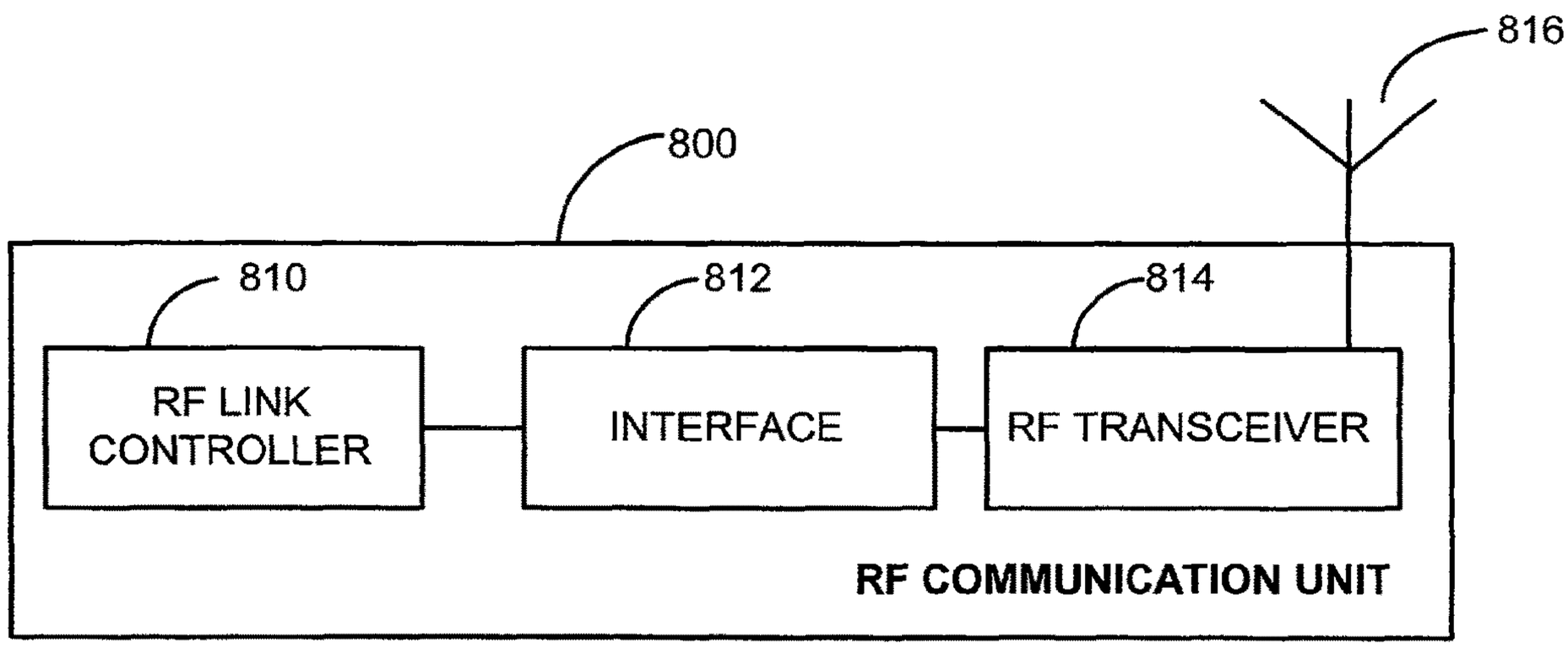
816
800
810
812
814
RF LINK CONTROLLER
INTERFACE
RF TRANSCEIVER
RF COMMUNICATION UNIT

FIG 8A

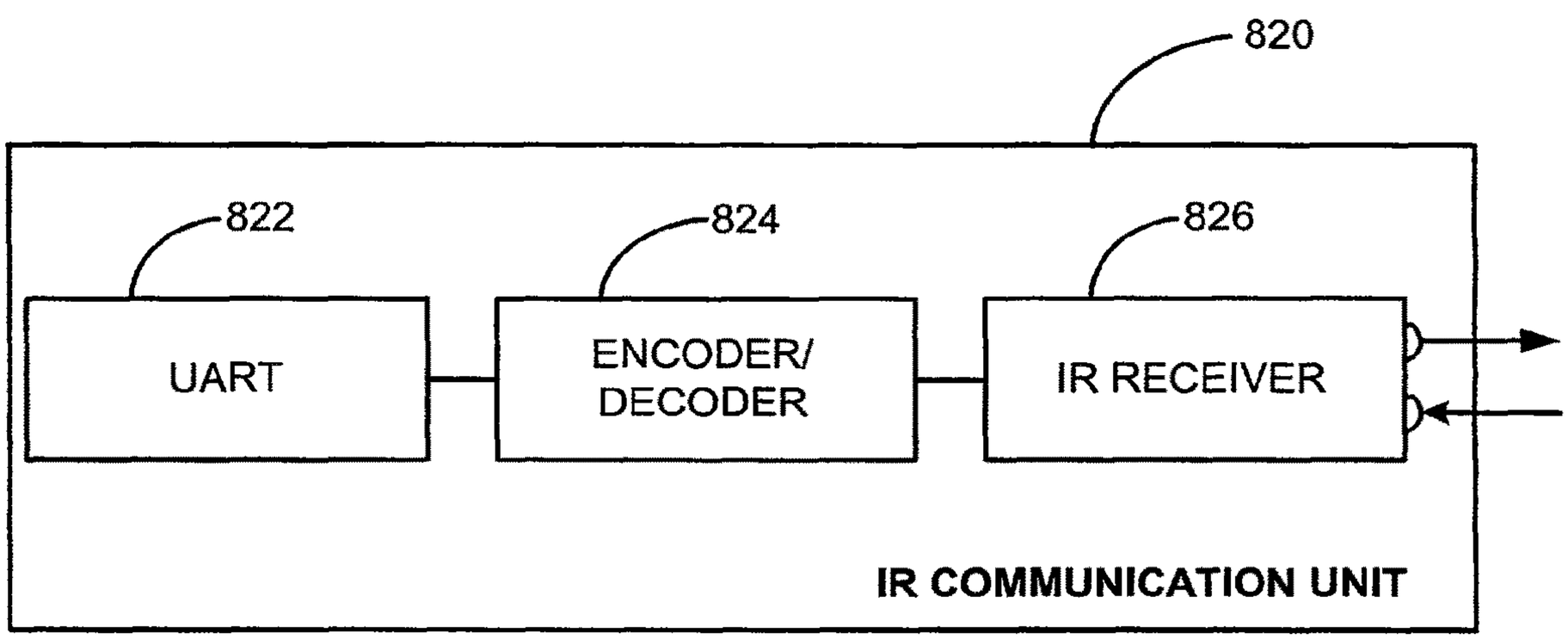
820
822
824
826
UART
ENCODER/ DECODER
IR RECEIVER
IR COMMUNICATION UNIT

FIG 8B

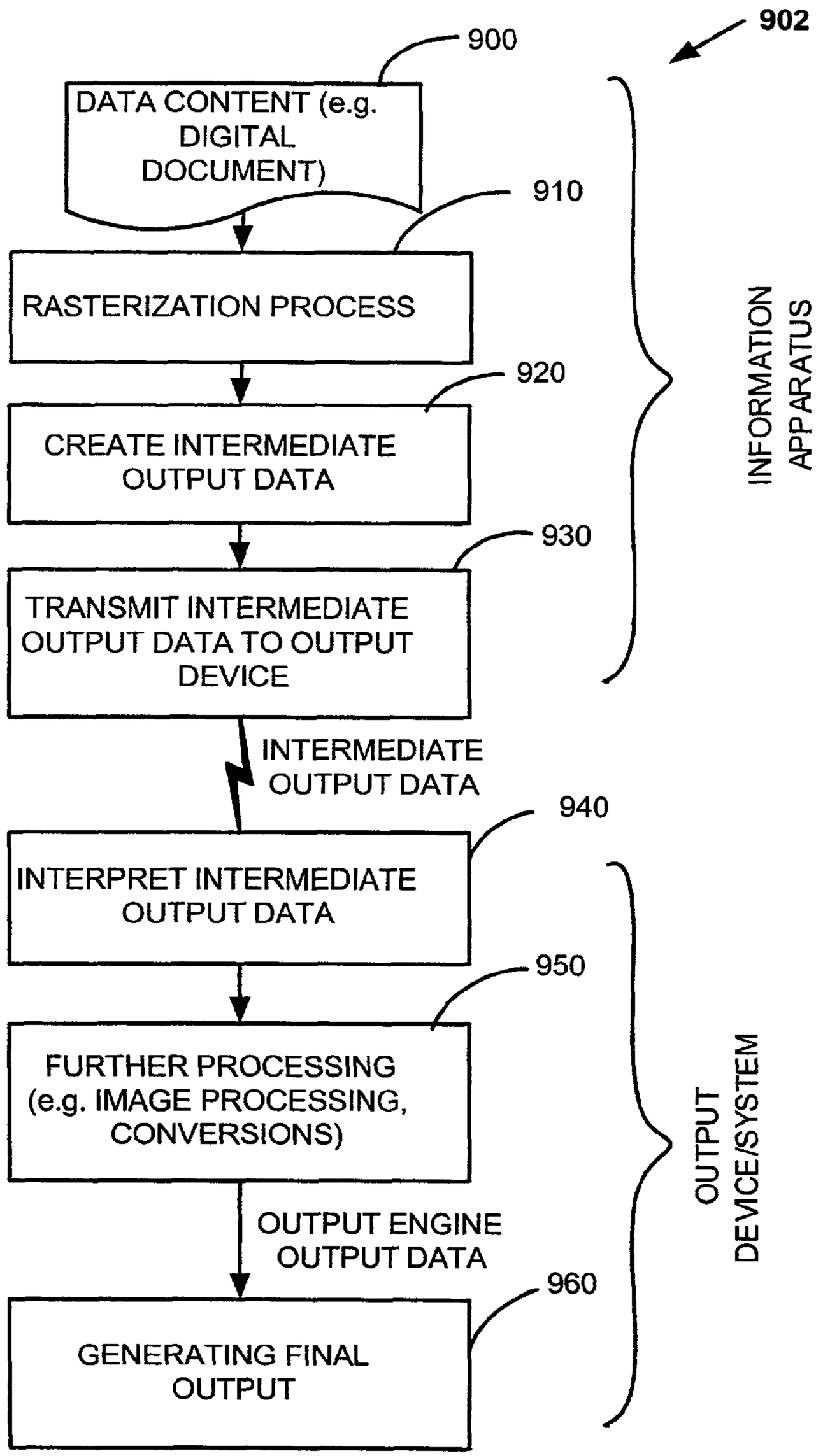
902
900
DATA CONTENT (e.g. DIGITAL DOCUMENT)
910
RASTERIZATION PROCESS
920
CREATE INTERMEDIATE OUTPUT DATA
930
TRANSMIT INTERMEDIATE OUTPUT DATA TO OUTPUT DEVICE
INFORMATION APPARATUS
INTERMEDIATE OUTPUT DATA
940
INTERPRET INTERMEDIATE OUTPUT DATA
950
FURTHER PROCESSING (e.g. IMAGE PROCESSING, CONVERSIONS)
OUTPUT ENGINE OUTPUT DATA
960
GENERATING FINAL OUTPUT
OUTPUT DEVICE/SYSTEM

FIG 9

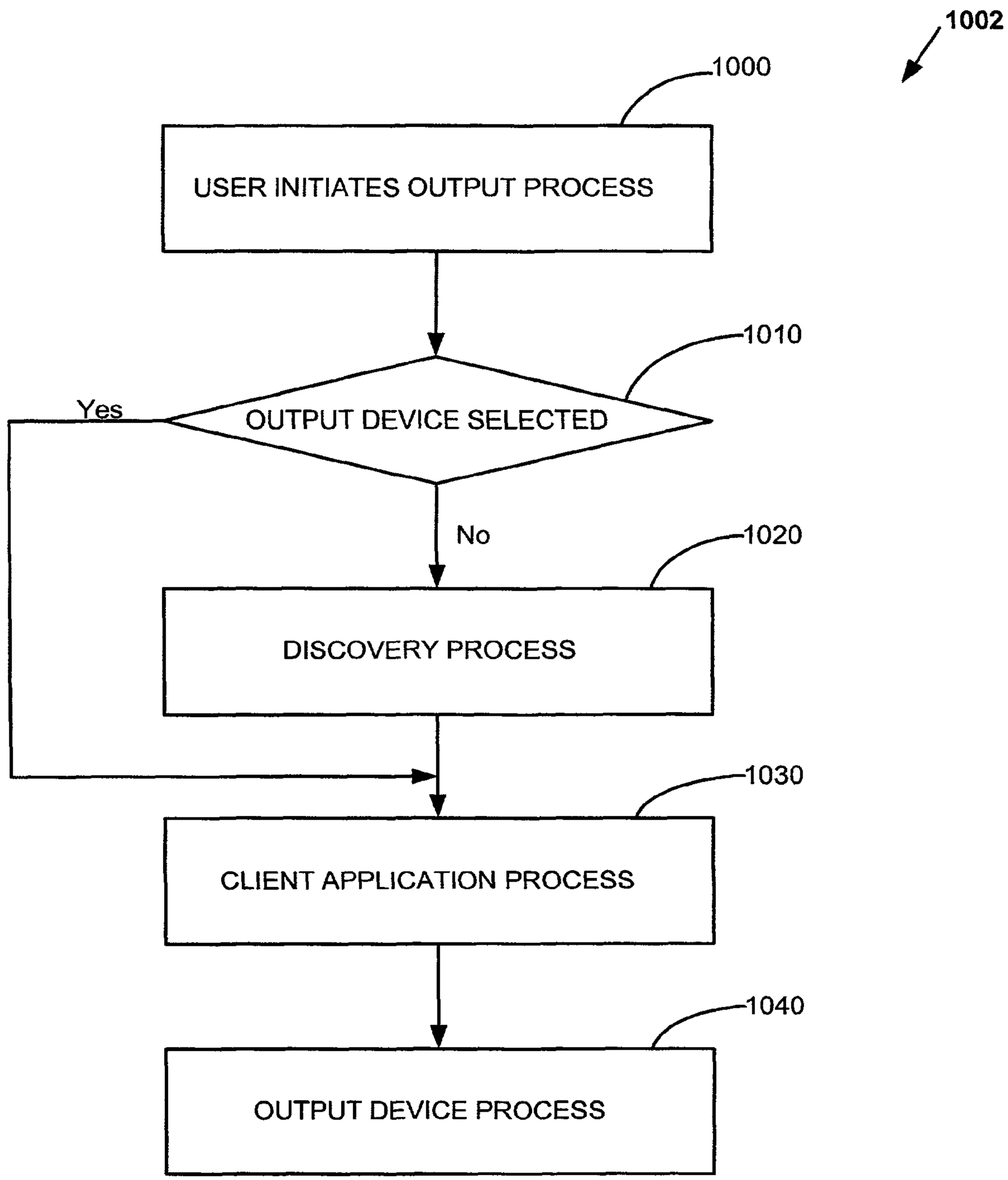
1002
1000
USER INITIATES OUTPUT PROCESS
1010
OUTPUT DEVICE SELECTED
Yes
No
1020
DISCOVERY PROCESS
1030
CLIENT APPLICATION PROCESS
1040
OUTPUT DEVICE PROCESS

FIG 10

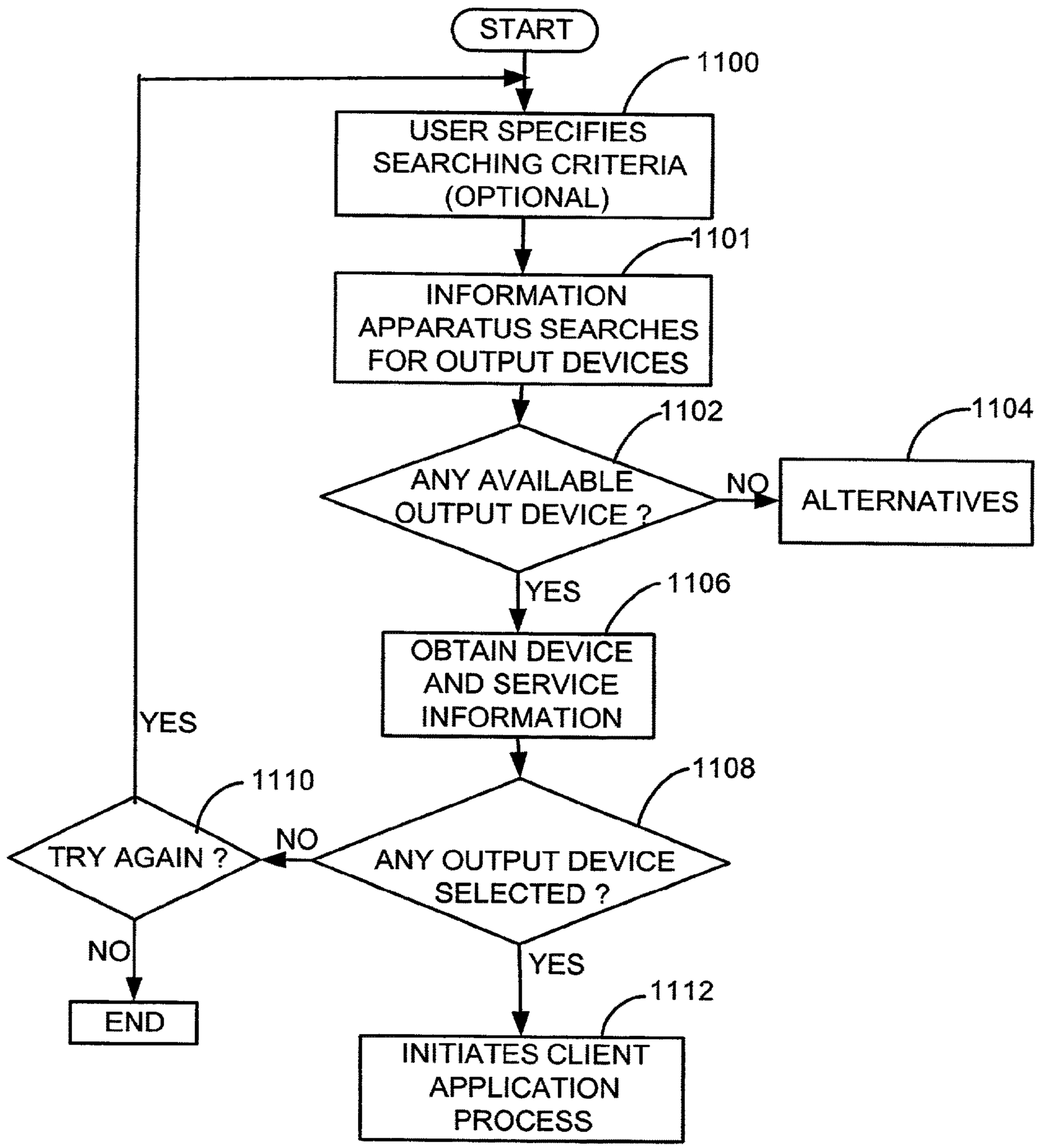
START
1100
USER SPECIFIES SEARCHING CRITERIA (OPTIONAL)
1101
INFORMATION APPARATUS SEARCHES FOR OUTPUT DEVICES
1102
ANY AVAILABLE OUTPUT DEVICE ?
NO
1104
ALTERNATIVES
YES
1106
OBTAIN DEVICE AND SERVICE INFORMATION
1108
ANY OUTPUT DEVICE SELECTED ?
NO
1110
TRY AGAIN ?
YES
NO
END
YES
1112
INITIATES CLIENT APPLICATION PROCESS

FIG 11

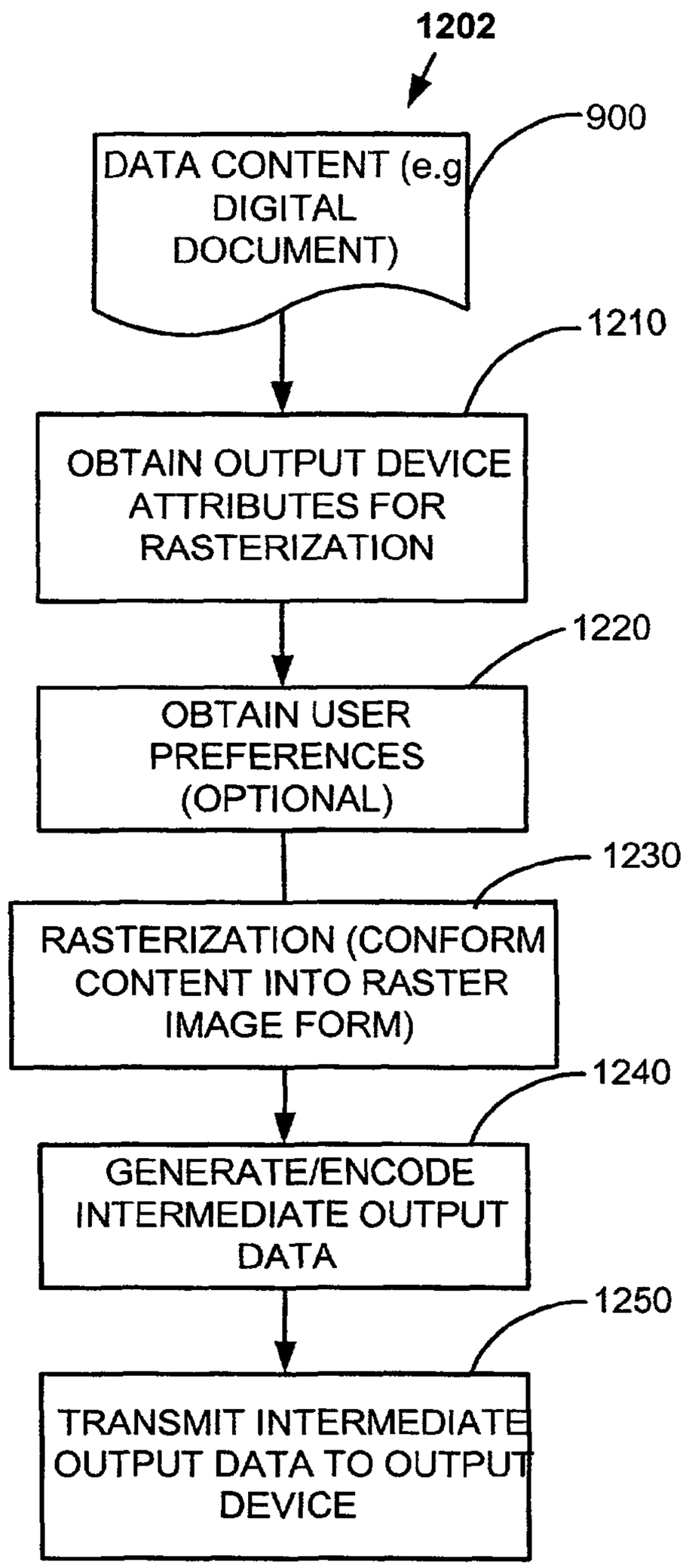

FIG 12 A

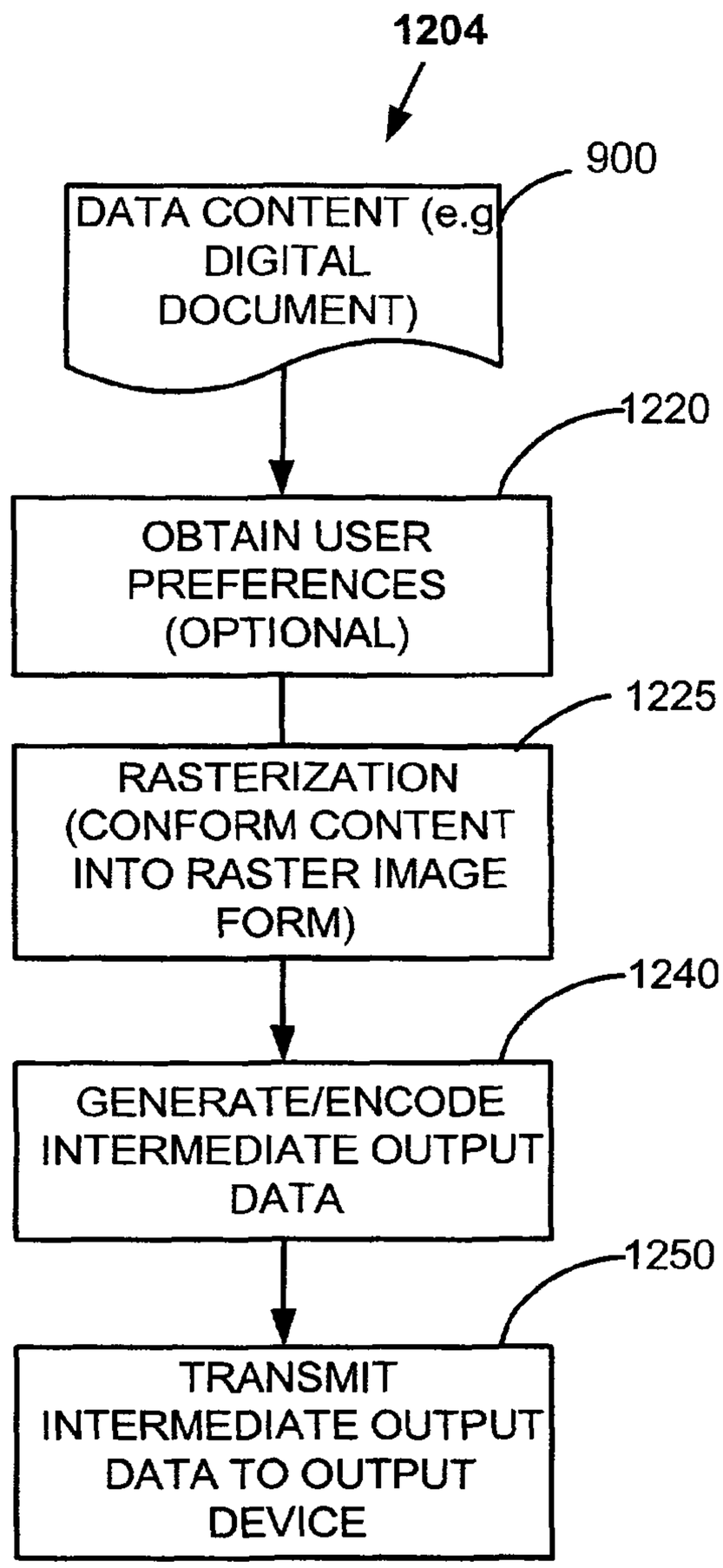

FIG 12 B

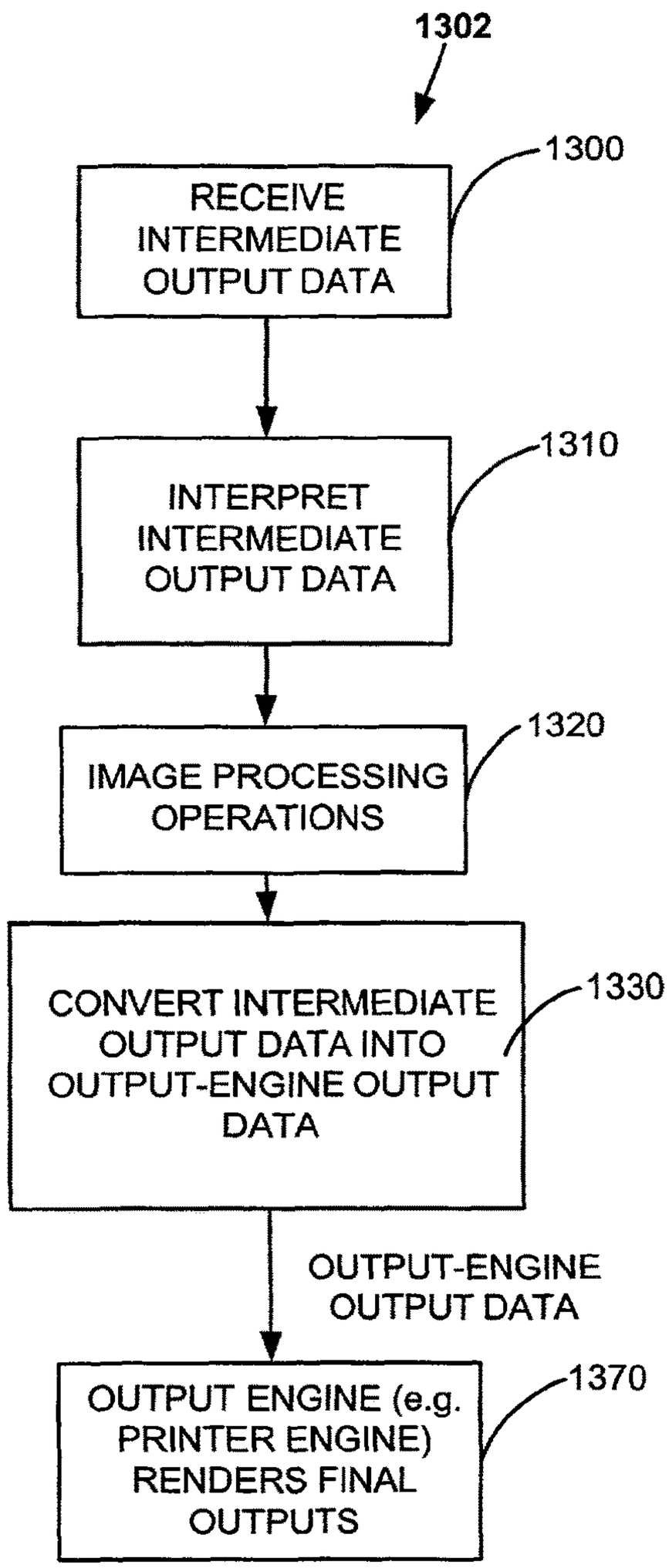

FIG 13 A

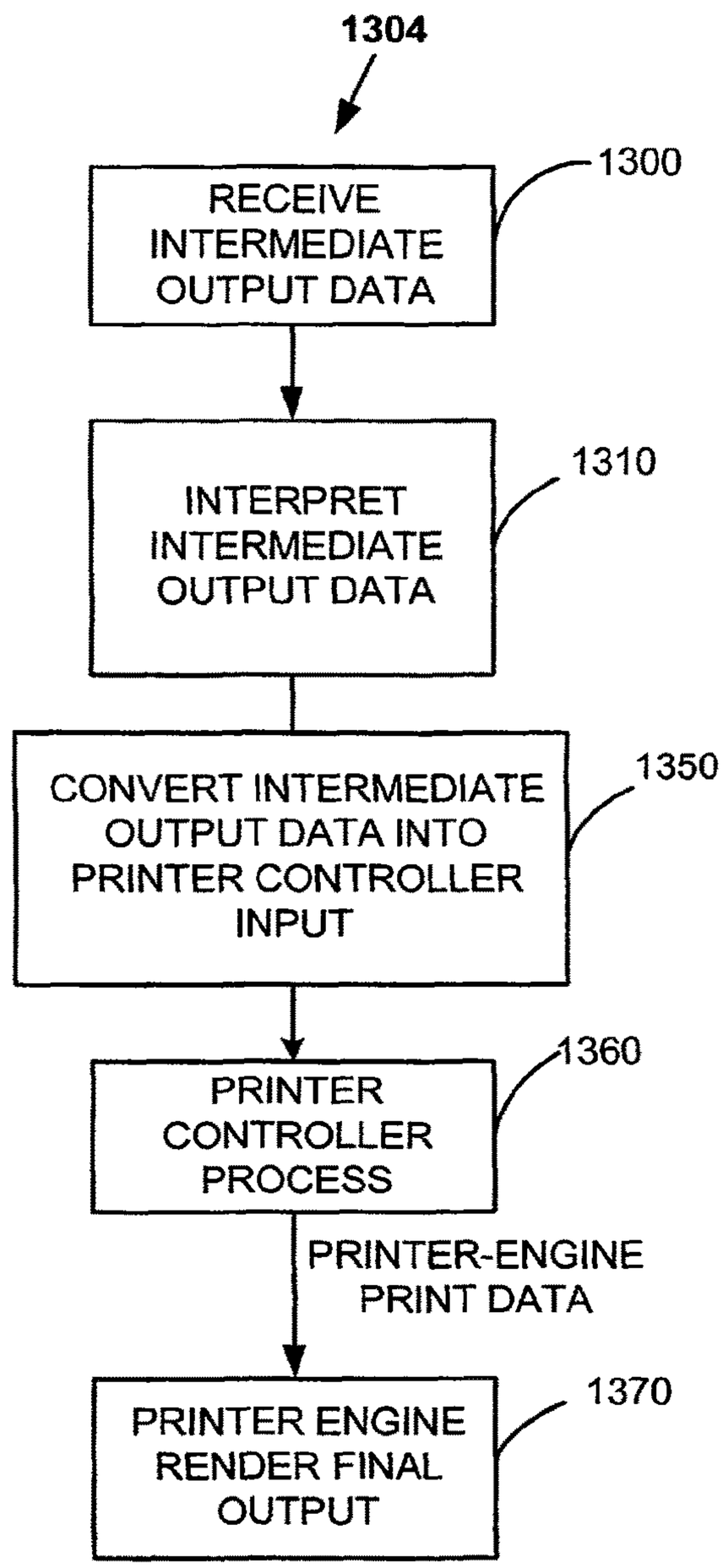

FIG 13 B

SOFTWARE APPLICATION FOR A MOBILE DEVICE TO WIRELESSLY MANAGE OR WIRELESSLY SETUP AN OUTPUT SYSTEM OR OUTPUT DEVICE FOR SERVICE

CROSS-REFERENCE TO RELATED APPLICATIONS

This application is a continuation of U.S. patent application Ser. No. 10/053,765 filed Jan. 18, 2002, which claims priority to U.S. Provisional Patent Application Ser. No. 60/262,764, filed Jan. 19, 2001. Additionally, this application is a continuation-in-part of U.S. patent application Ser. No. 09/992,413 filed Nov. 18, 2001, which claims benefit of U.S. Provisional Patent Application Ser. No. 60/252,682 filed Nov. 20, 2000. Moreover, this application is a continuation-in-part of U.S. patent application Ser. No. 13/710,299 filed Dec. 10, 2012, which is a continuation of U.S. patent application Ser. No. 12/903,048 filed Oct. 12, 2010 and now issued as U.S. Pat. No. 8,332,521, which is a continuation of U.S. patent application Ser. No. 10/016,223 filed Nov. 1, 2001 and now issued as U.S. Pat. No. 7,941,541, and which claims benefit of U.S. Provisional Patent Application Ser. No. 60/245,101, filed Nov. 1, 2000. The complete disclosures of the above patent applications are hereby incorporated by reference for all purposes.

TECHNICAL FIELD OF THE INVENTION

Present invention relates to providing content to an output device and, in particular, to providing universal output in which an information apparatus can pervasively output content to an output device without the need to install a dedicated device dependent driver or applications for each output device.

BACKGROUND OF THE DISCLOSURE

The present invention relates to universal data output and, in particular, to providing a new data output method and a new raster image process for information apparatuses and output devices.

As described herein, information apparatuses refer generally to computing devices, which include both stationary computers and mobile computing devices (pervasive devices). Examples of such information apparatuses include, without limitation, desktop computers, laptop computers, networked computers, palmtop computers (hand-held computers), personal digital assistants (PDAs), Internet enabled mobile phones, smart phones, pagers, digital capturing devices (e.g., digital cameras and video cameras), Internet appliances, e-books, information pads, and digital or web pads. Output devices may include, without limitation, fax machines, printers, copiers, image and/or video display devices (e.g., televisions, monitors and projectors), and audio output devices.

For simplicity and convenience, hereafter, the following descriptions may refer to an output device as a printer and an output process as printing. However, it should be understood that the term printer and printing used in the discussion of present invention refer to one embodiment used as a specific example to simplify the description of the invention. The references to printer and printing used here are intended to be applied or extended to the larger scope and definition of output devices and should not be construed as restricting the scope and practice of present invention.

Fueled by an ever-increasing bandwidth, processing power, wireless mobile devices, and wireless software applications, millions of users are or will be creating, downloading, and transmitting content and information using their pervasive or mobile computing devices. As a result, there is a need to allow users to conveniently output content and information from their pervasive computing devices to any output device. As an example, people need to directly and conveniently output from their pervasive information apparatus, without depending on synchronizing with a stationary computer (e.g., desktop personal computer) for printing.

To illustrate, a mobile worker at an airport receiving e-mail in his hand-held computer may want to walk up to a nearby printer or fax machine to have his e-mail printed. In addition, the mobile worker may also want to print a copy of his to-do list, appointment book, business card, and his flight schedule from his mobile device. As another example, a user visiting an e-commerce site using his mobile device may want to print out transaction confirmation. In still another example, a user who takes a picture with a digital camera may want to easily print it out to a nearby printer. In any of the above cases, the mobile user may want to simply walk up to a printer and conveniently print a file (word processing document, PDF, HTML etc) that is stored on the mobile device or downloaded from a network (e.g., Internet, corporate network).

Conventionally, an output device (e.g., a printer) is connected to an information apparatus via a wired connection such as a cable line. A wireless connection is also possible by using, for example, radio communication or infrared communication. Regardless of wired or wireless connection, a user must first install in the information apparatus an output device driver (e.g., printer driver in the case the output device is a printer) corresponding to a particular output device model and make. Using a device-dependent or specific driver, the information apparatus may process output content or digital document into a specific output device's input requirements (e.g., printer input requirements). The output device's input requirements correspond to the type of input that the output device (e.g., a printer) understands. For example, a printer's input requirement may include printer specific input format (e.g., one or more of an image, graphics or text format or language). Therefore, an output data (or print data in the case the output device is a printer) herein refers to data that is acceptable for input to an associated output device. Examples of input requirements may include, without limitation, audio format, video format, file format, data format, encoding, language (e.g., page description language, markup language etc), instructions, protocols or data that can be understood or used by a particular output device make and model.

Input requirements may be based on proprietary or published standards or a combination of the two. An output device's input requirements are, therefore, in general, device dependent. Different output device models may have their own input requirements specified, designed or adopted by the output device manufacturer (e.g., the printer manufacturer) according to a specification for optimal operation. Consequently, different output devices usually require use of specific output device drivers (e.g., printer drivers) for accurate output (e.g., printing). Sometimes, instead of using a device driver (e.g., printer driver), the device driving feature may be included as part of an application software.

Installation of a device driver (e.g., printer driver) or application may be accomplished by, for example, manual installation using a CD or floppy disk supplied by the printer manufacturer. Or alternatively, a user may be able to down-

load a particular driver or application from a network. For a home or office user, this installation process may take anywhere from several minutes to several hours depending on the type of driver and user's sophistication level with computing devices and networks. Even with plug-and-play driver installation, the user is still required to execute a multi-step process for each printer or output device.

This installation and configuration process adds a degree of complexity and work to end-users who may otherwise spend their time doing other productive or enjoyable work. Moreover, many unsophisticated users may be discouraged from adding new peripherals (e.g., printers, scanners, etc.) to their home computers or networks to avoid the inconvenience of installation and configuration. It is therefore desirable that an information apparatus can output to more than one output device without the inconvenience of installing multiple dedicated device dependent drivers.

In addition, conventional output or printing methods may pose significantly higher challenges and difficulties for mobile device users than for home and office users. The requirement for pre-installation of a device-dependent driver diminishes the benefit and concept of mobile (pervasive) computing and output. For example, a mobile user may want to print or output e-mail, PowerPoint® presentation documents, web pages, or other documents at an airport, gas station, convenience store, kiosk, hotel, conference room, office, home, etc. It is highly unlikely that the user would find at any of these locations a printer of the same make and model as is at the user's base station. As a consequence, under the conventional printing method, the user would have to install and configure a printer driver each time at each such remote location before printing. It is usually not a viable option given the hundreds, or even thousands of printer models in use, and the limited storage, memory space, and processing power of the information apparatus.

Moreover, the user may not want to be bothered with looking for a driver or downloading it and installing it just to print out or display one page of email at the airport. This is certainly an undesirable and discouraging process to promote pervasive or mobile computing. Therefore, a more convenient printing method is needed in support of the pervasive computing paradigm where a user can simply walk up to an output device (e.g., printer or display device) and easily output a digital document without having to install or pre-install a particular output device driver (e.g., printer driver).

Another challenge for mobile users is that many mobile information apparatuses have limited memory space, processing capacity and power. These limitations are more apparent for small and low-cost mobile devices including, for example, PDAs, mobile phones, screen phones, pagers, e-books, Internet Pads, Internet appliances etc. Limited memory space poses difficulties in installing and running large or complex printer or device drivers, not to mention multiple drivers for a variety of printers and output devices. Slow processing speed and limited power supply create difficulties driving an output device. For example, processing or converting a digital document into output data by a small mobile information apparatus may be so slow that it is not suitable for productive output. Intensive processing may also drain or consume power or battery resources. Therefore, a method is needed so that a small mobile device, with limited processing capabilities, can still reasonably output content to various output devices.

To output or render content (e.g. digital document) to an output device, a raster image processing (RIP) operation on the content is usually required. RIP operation can be computationally intensive and may include (1) a rasterization operation, (2) a color space conversion, and (3) a halftoning operation. RIP may also include other operations such as scaling, segmentation, color matching, color correction, GCR (Grey component replacement), Black generation, image enhancement compression/decompression, encoding/decoding, encryption/decryption GCR, image enhancement among others.

Rasterization operation in RIP involves converting objects and descriptions (e.g. graphics, text etc) included in the content into an image form suitable for output. Rasterization may include additional operations such as scaling and interpolation operations for matching a specific output size and resolution. Color space conversion in RIP includes converting an input color space description into a suitable color space required for rendering at an output device (e.g. RGB to CMYK conversion). Digital halftoning is an imaging technique for rendering continuous tone images using fewer luminance and chrominance levels. Halftoning operations such as error diffusion can be computationally intensive and are included when the output device's bit depth (e.g. bits per pixel) is smaller than the input raster image bit depth.

Conventionally, RIP operations are included either in an information apparatus, or as part of an output device or output system (e.g. in a printer controller). FIG. **1**A illustrates a flow diagram of a conventional data output method **102** in which RIP **110** is implemented in the information apparatus. Output devices that do not include a printer controller to perform complex RIP operations, such as a lower-cost, lower speed inkjet printer, normally employ data output method **102**. In data output method **102**, an information apparatus obtains content (e.g. a digital document) in step **100** for rendering or output at an output device. The information apparatus may includes an application (e.g. device driver), which implements RIP operation **110**. The information apparatus generates an output data in step **120** and transmits the output data to the output device in step **130** for rendering. The output data relating to the content is in an acceptable form (e.g. in an appropriate output size and resolution) to the output engine (e.g. display engine, printer engine etc.) included in the output device. The output data in a conventional output method **102** is usually device dependent.

One drawback for the data output method **102** of FIG. **1**A is that the information apparatus performs most if not the entire raster image processing operations **110** required for output. The RIP operations may require intensive computation. Many information apparatus such as mobile information device might have insufficient computing power and/or memory to carry out at an acceptable speed the RIP operations **110** required in an output process.

Another drawback for the conventional data output method **102** of FIG. **1**A is that the generated output data is device dependent and therefore is typically not very portable to other output devices. As a result, the information apparatus may need to install multiple applications or device drivers for multiple output devices, which may further complicate its feasibility for use in information apparatuses with limited memory, storage and processing power.

FIG. **1**B illustrates a flow diagram of another conventional data output method **104** in which the RIP is implemented in an output device. An example of an output device that implements process **104** is a high-speed laser printer which includes a printer controller for performing RIP operations and an output engine (e.g. printer engine) for rendering content. Printer controller may be internally

installed or externally connected to an output device (printer in this example). In data output method **104**, an information apparatus obtains content for output in step **100** and generates in step **160** an output data or print data for transmitting to the output device in step **170**. Print data includes information related to the content and is usually encoded in a page description language (PDL) such as PostScript and PCL etc. In step **180**, the printer receives the output data or print data (in a PDL). In step **190**, a printer controller included in the printer interprets the PDL, performs RIP operations, and generates a printer-engine print data that is in a form acceptable to the printer engine (e.g. a raster image in an appropriate output size, bit depth, color space and resolution). In step **150** the printer engine renders the content with the printer-engine print data.

It will be understood that a reference to print data or output data including a language, such as PDL, should be interpreted as meaning that the print data or output data is encoded using that language. Correspondingly, a reference to a data output process generating a language, such as PDL, should be interpreted as meaning that the data output process encodes data using that language.

There are many drawbacks in the conventional data output method **104** shown in FIG. **1**B. These drawbacks are especially apparent for mobile computing devices with limited processing power and memory. One such drawback is that the output data or print data, which include a page description language (PDL) such as PostScript or PCL, can be very complex. Generating complex PDL may increase memory and processing requirements for an information apparatus. Furthermore, interpreting, decoding and then raster image processing complex PDL can increase computation, decrease printing speed, and increase the cost of the output device or its printer controller.

Another drawback is that the output data that includes PDL can creates a very large file size that would increase memory and storage requirements for the information apparatus, the output device and/or the printer controller etc. Large file size may also increase the bandwidth required in the communication link between the information apparatus and the output device.

Finally, to rasterize text in an output device, a printer controller may need to include multiple fonts. When a special font or international characters is not included or missing in the printer controller, the rendering or output can potentially become inaccurate or inconsistent.

SUMMARY OF THE INVENTION

Accordingly, this invention provides a convenient universal data output method in which an information apparatus and an output device or system share the raster image processing operations. Moreover, the new data output method eliminates the need to install a plurality of device-dependent dedicated drivers or applications in the information apparatus in order to output to a plurality of output devices.

In accordance with present invention, an electronic system and method of pervasive and universal output allow an information apparatus to output content conveniently to virtually any output device. The information apparatus may be equipped with a central processing unit, input/output control unit, storage unit, memory unit, and wired or wireless communication unit or adapters. The information apparatus preferably includes a client application that may be implemented as a software application, a helper application, or a device driver (a printer driver in case of a printer). The client application may include management and control capabilities with hardware and software components including, for example, one or more communication chipsets residing in its host information apparatus.

The client application in the information apparatus may be capable of communicating with, managing and synchronizing data or software components with an output device equipped with an output controller of present invention.

Rendering content in an output device refers to printing an image of the content onto an substrate in the case of a printing device; displaying an image of the content in the case of a displaying device; playing an audio representation of the content in a voice or sound output device or system.

An output controller may be a circuit board, card or software components residing in an output device. Alternatively, the output controller may be connected externally to an output device as an external component or "box." The output controller may be implemented with one or more combinations of embedded processor, software, firmware, ASIC, DSP, FPGA, system on a chip, special chipsets, among others. In another embodiment, the functionality of the output controller may be provided by application software running on a PC, workstation or server connected externally to an output device.

In conventional data output method **102** as described with reference to FIG. **1**A, an information apparatus transmits output data to an output device for rendering. Output data corresponds to content intended for output and is mostly raster image processed (RIPed) and therefore is device dependent because raster image processing is a typical device dependent operation. Output data may be encoded or compressed with one or more compression or encoding techniques. In present invention, an information apparatus generates an intermediate output data for transmitting to an output device. The intermediate output data includes a rasterized image corresponding to the content; however, device dependent image processing operations of a RIP (e.g. color matching and halftoning) have not been performed. As a result, an intermediate output data is more device independent and is more portable than the output data generated by output method with reference to FIG. **1**A.

In one implementation of this invention, the intermediate output data includes MRC (Mixed raster content) format, encoding and compression techniques, which further provides improved image quality and compression ratio compared to conventional image encoding and compression techniques.

In an example of raster image process and data output method of the present invention, a client application such as a printer driver is included in an information apparatus and performs part of raster image processing operation such as rasterization on the content. The information apparatus generates an intermediate output data that includes an output image corresponding to the content and sends the intermediate output data to an output device or an output system for rendering. An output controller application or component included in the output device or output system implements the remaining part of the raster image processing operations such as digital halftoning, color correction among others.

Unlike conventional raster image processing methods, this invention provides a more balanced distribution of the raster image processing computational load between the Information apparatus and the output device or the output system. Computational intensive image processing operations such as digital halftoning and color space conversions can be implemented in the output device or output system. Consequently, this new raster image processing method

reduces the processing and memory requirements for the information apparatus when compared to conventional data output methods described with reference to FIG. **1**A in which the entire raster image process is implemented in the information apparatus. Additionally, in this invention, a client application or device driver included in the information apparatus, which performs part of the raster image processing operation, can have a smaller size compared to a conventional output application included in the information apparatus, which performs raster image processing operation.

In another implementation, the present invention provides an information apparatus with output capability that is more universally accepted by a plurality of output devices. The information apparatus, which includes a client application, generates an intermediate output data that may include device independent attributes. An output controller includes components to interpret and process the intermediate output data. The information apparatus can output content to different output devices or output systems that include the output controller even when those output devices are of different brand, make, model and with different output engine and input data requirements. Unlike conventional output methods, a user does not need to preinstall in the information apparatus multiple dedicated device dependent drivers or applications for each output device.

The combination of a smaller-sized client application, a reduced computational requirement in the information apparatus, and a more universal data output method acceptable for rendering at a plurality of output devices enable mobile devices with less memory space and processing capabilities to implement data output functions which otherwise would be difficulty to implement with conventional output methods.

In addition, this invention can reduce the cost of an output device or an output system compared to conventional output methods **104** that include a page description language (PDL) printer controller. In the present invention, an information apparatus generates and sends an intermediate output data to an output device or system. The intermediate output data in one preferred embodiment includes a rasterized output image corresponding to the content intended for output. An output controller included in an output device or an output system decodes and processes the intermediate output data for output, without performing complex interpretation and rasterization compared to conventional methods described in process **104**. In comparison, the conventional data output process **104** generates complex PDL and sends this PDL from an information apparatus to an output device that includes a printer controller (e.g. a PostScript controller or a PCL5 controller among others). Interpretation and raster image processing of a PDL have much higher computational requirements compared to decoding and processing the intermediate output data of this invention that include rasterized output image or images. Implementing a conventional printer controller with, for example, PDL increases component cost (e.g. memories, storages, ICs, software and processors etc.) when compared to using the output controller included in the data output method of this present invention.

Furthermore, an output data that includes PDL can create a large file size compared to an intermediate output data that includes rasterized output image. The data output method for this invention comparatively transmits a smaller output data from an information apparatus to an output device. Smaller output data size can speed up transmission, lower communication bandwidth, and reduce memory requirements. Finally, this invention can provide a convenient method to render content at an output device with or without connection to a static network. In conventional network printing, both information apparatus and output device must be connected to a static network. In this invention, through local communication and synchronization between an information apparatus and an output device, installation of hardware and software to maintain static network connectivity may not be necessary to enable the rendering of content to an output device.

According to the several aspects of the present invention there is provided the subject matter defined in the appended independent claims.

Additional objects and advantages of the present invention will be apparent from the detailed description of the preferred embodiment thereof, which proceeds with reference to the accompanying drawings.

BRIEF DESCRIPTION OF THE DRAWINGS

FIG. **1**A is a flow diagram of a conventional data output method and its corresponding raster image process in accordance with prior art.

FIG. **1**B is a flow diagram of a second conventional data output method and its corresponding raster image process for an output device that includes a conventional printer controller in accordance with prior art.

FIGS. **2**A and **2**B are block diagrams illustrating components of an operating environment that can implement the process and apparatus of the present invention.

FIG. **3**A is a schematic block diagram illustrating hardware/software components of an information apparatus implementation in accordance with the present invention. The information apparatus includes an operating system.

FIG. **3**B is a second schematic block diagram illustrating hardware/software components of an information apparatus implementation in accordance with the present invention.

FIG. **4**A is a block diagram of a conventional printing system or printer with a conventional printer controller.

FIG. **4**B is a block diagram of a second conventional output system or output device.

FIG. **5**A is a schematic block diagram of a printing system or printer with a conventional printer controller and an output controller in accordance with present invention.

FIG. **5**B is a schematic block diagram of a second output system or output device that includes an output controller in accordance with present invention.

FIG. **6**A is a schematic block diagram illustrating hardware/software components of an output controller in accordance with present invention. The output controller includes an operating system.

FIG. **6**B is a second schematic block diagram illustrating hardware/software components of an output controller in accordance with present invention. The output controller does not include an operating system.

FIG. **6**C is a third schematic block diagram illustrating hardware/software components of an output controller in accordance with present invention. The output controller combines the functionality of a printer controller and an output controller of present invention.

FIGS. **7**A-**7**F illustrate various configurations and implementations of output controller with respect to an output device such as a printer.

FIG. **8**A is a block diagram illustrating an exemplary implementation of hardware/software components of wireless communication unit.

FIG. **8**B is block diagram illustrating a second exemplary implementation of hardware/software components of wireless communication unit.

FIG. **9** is a flow diagram of a universal data output method and its corresponding raster imaging process of the present invention.

FIG. **10** is a block diagram of a universal data output method of the present invention with respect to the components, system and apparatus described with reference to FIG. **2**.

FIG. **11** is a flow diagram illustrating one way of implementing a discovery process optionally included in the output process of FIG. **10**.

FIGS. **12**A and **12**B are flow diagrams of exemplary client application process included in the output process of FIG. **10**.

FIGS. **13**A and **13**B are flow diagrams of exemplary output device or output system process included in the output process of FIG. **10**.

DETAILED DESCRIPTION OF PREFERRED EMBODIMENTS

Sets forth below are definitions of terms that are used in describing implementations of the present invention. These definitions are provided to facilitate understanding and illustration of implementations of the present invention and should in no way be construed as limiting the scope of the invention to a particular example, class, or category.

Output Device Profile (or Object)

An output device profile (or object) includes software and data entity, which encapsulates within itself both data and attributes describing an output device and instructions for operating that data and attributes. An output device profile may reside in different hardware environments or platforms or applications, and may be transported in the form of a file, a message, a software object or component among other forms and techniques. For simplicity of discussion, a profile or object may also include, for example, the concept of software components that may have varying granularity and can consist of one class, a composite of classes, or an entire application.

The term profile or object used herein is not limited to software or data as its media. Any entity containing information, descriptions, attributes, data, instructions etc. in any computer-readable form or medium such as hardware, software, files based on or including voice, text, graphics, image, or video information, etc., are all valid forms of profile and object definition.

A profile or object may also contain in one of its fields or attributes a reference or pointer to another profile or object, or a reference or pointer to data and or content. A reference to a profile or object may include one or more, or a combination of pointers, identifiers, names, paths, addresses or any descriptions relating to a location where an object, profile, data, or content can be found.

An output device profile may contain one or more attributes that may identify and describe, for example, the capabilities and functionalities of a particular output device such as a printer. An output device profile may be stored in the memory component of an output device, an information apparatus or in a network node. A network node includes any device, server or storage location that is connected to the network. As described below in greater detail, an information apparatus requesting output service may communicate with an output device. During such local service negotiation, at least a partial output device profile may be uploaded to the information apparatus from the output device. By obtaining the output device profile (or printer profile in the case of a printer), the information apparatus may learn about the capability, compatibility, identification, and service provided by the output device.

As an example, an output device profile may contain one or more of the following fields and or attribute descriptions. Each of following fields may be optional, and furthermore, each of the following fields or attributes may or may not exist in a particular implementation (e.g., may be empty or NULL):

Identification of an output device (e.g., brand, model, registration, IP address etc.)

Services and feature sets provided by an output device (e.g., color or grayscale output, laser or inkjet, duplex, output quality, price per page, quality of service, etc.)

Type of input languages, formats, output data and/or input requirements (e.g., PostScript, PCL, XML, RTL, etc.) supported by an output device.

Device specific or dependent parameters and information (e.g., communication protocols, color space, color management methods and rendering intents, resolution, halftoning methods, dpi (dots-per-inch), bit depth, page size, printing speed, number of independent colors channels or ink etc.)

Data and tables needed for image processing such as color table, halftone table, scale factor, encoding/decoding parameters and methods, compression and decompression parameters and method etc.

Another profile which contain parameters and information about the output device and its service (e.g. color profiles, halftoning profiles, communication profiles, rasterization profiles, quality of service etc.).

Payment information on a plurality of services provided by an output device.

Information or security requirements and type of authentication an output device supports.

Date and version of the output device profile, history of its modification and updates.

Software components containing algorithms or instructions or data, which may be uploaded to run in an information apparatus. For example, a graphical user interface (GUI) software component may be uploaded to an information apparatus. The software component may be incorporated into or launched in the information apparatus by a client application of present invention to capture a user's preferences (e.g., print quality, page layout, number of copies, number of cards per page, etc.). In another example, software components may include methods, instructions or executables for compression/decompression, encoding/decoding, color matching or correction, segmentation, scaling, halftoning, encryption/decryption among others.

Pointer or reference to one or more output device parameters, including one or more of the above described output device profile or object fields and or attribute descriptions. For example, a more up-to-date or original version of output device parameters may sometimes be stored in a network node (any device, server or storage location that is connected to the network), or within the information apparatus where it can be obtained by the client application. An output device profile may include pointer or pointers to these output device parameters.

Content (or Data Content, Digital Content, Output Content)

Content (or data content, digital content, output content) is the data intended for output, which may include texts, graphics, images, forms, videos, audio among other content types. Content may include the data itself or a reference to that data. Content may be in any format, language, encoding or combination, and it can be in a format, language or encoding that is partially or totally proprietary. A digital document is an example of content that may include attributes and fields that describe the digital document itself and or reference or references to the digital document or documents. Examples of a digital document may be any one or combination of file types: HTML, VHTML, PostScript, PCL, XML, PDF, MS Word, PowerPoint, JPEG, MPEG, GIF, PNG, WML, VWML, CHTML, HDML, ASCII, 2-byte international coded characters, etc. Content may be used interchangeably with the term data content, output content or digital content in the descriptions of present invention.

Intermediate Output Data

Output data (or print data in case of a printer) is the electronic data sent from an information apparatus to an output device. Output data is related to the content intended for output and may be encoded in a variety of formats and languages (e.g. postscript, PCL, XML), which may include compressed or encrypted data. Some output device manufacturers may also include in the output data (or print data) a combination of proprietary or non-proprietary languages, formats, encoding, compression, encryption etc.

Intermediate output data is the output data of the present invention, and it includes the broader definition of an output file or data generated by an information apparatus, or a client application or device driver included in the information apparatus. An intermediate output data may contain text, vector graphics, images, video, audio, symbols, forms or combination and can be encoded with one or more of a page description language, a markup language, a graphics format, an imaging format, a metafile among others. An intermediate output data may also contain instructions (e.g. output preferences) and descriptions (e.g. data layout) among others. Part or all of an intermediate output data may be compressed, encrypted or tagged.

In a preferred embodiment of this invention, intermediate output data contains rasterized image data. For example, vector graphics and text information or objects that are not in image form included in content can be rasterized or conformed into image data in an information apparatus and included in an intermediate output data. Device dependent image processing operations of a RIP such as digital halftoning and color space conversions can be implemented at an output device or an output system.

The intermediate output data can be device dependent or device independent. In one implementation, the rasterized output image is device dependent if the rasterization parameters used, such as resolution, scale factor, bit depth, output size and or color space are device dependent. In another implementation of this invention, the rasterized image may be device independent if the rasterization parameters used are device independent. Rasterization parameter can become device independent when those parameters include a set of predetermined or predefined rasterization parameters based on a standard or a specification. With predefined or device independent rasterization parameters, a client application of present invention can rasterize at least a portion of the content and generate a device independent image or images included in the intermediate output data. By doing so, the intermediate output data may become device independent and therefore, become universally acceptable with output devices that have been pre-configured to accept the intermediate output data.

One advantage of rasterizing or converting text and graphics information into image data at the information apparatus is that the output device or printer controller no longer needs to perform complex rasterization operation nor do they need to include multiple fonts. Therefore, employing the intermediate output data and the data output method described herein could potentially reduce the cost and complexity of an output controller, printer controller and or output device.

One form of image data encoding is known as mixed raster content, or MRC. Typically, an image stored in MRC includes more than one image or bitmap layers. In MRC, an image can be segmented in different layers based on segmentation criteria such as background and foreground, luminance and chrominance among others. For example, an MRC may include three layers with a background layer, a foreground layer and a toggle or selector layer. The three layers are coextensive and may include different resolution, encoding and compression. The foreground and background layers may each contain additional layers, depending on the manner in which the respective part of the image is segmented based on the segmentation criteria, component or channels of a color model, image encoding representation (HLS, RGB, CMYK, YCC, LAB etc) among others. The toggle layer may designate, for each point, whether the foreground or background layer is effective. Each layer in a MRC can have different bit depths, resolution, color space, which allow, for example, the foreground layer to be compressed differently from the background layer. The MRC form of image data has previously been used to minimize storage requirements. Further, an MRC format has been proposed for use in color image fax transmission.

In one embodiment of present invention, the intermediate output data includes one or more rasterized output images that employ MRC format, encoding and or related compression method. In this implementation, different layers in the output image can have different resolutions and may include different compression techniques. Different information such as chrominance and luminance and or foreground and background information in the original content (e.g. digital document) can be segmented and compressed with different compression or encoding techniques. Segmented elements or object information in the original content can also be stored in different image layers and with different resolution. Therefore, with MRC, there is opportunity to reduce output data file size, retain greater image information, increase compression ratio, and improve image quality when compared to other conventional image encoding and compression techniques. Implementations of rasterization, raster image processing and intermediate output data that include MRC encoding in the present invention are described in more detail below.

Rasterization

Rasterization is an operation by which graphics and text in a digital document are converted to image data. For image data included in the digital document, rasterization may include scaling and interpolation. The rasterization operation is characterized by rasterization parameters including, among others bit depth and resolution. A given rasterization operation may be characterized by several more rasterization parameters, including output size, color space, color channels etc. Values of one or more of the rasterization parameters employed in a rasterization operation may be specified by default; values of one or more of the rasterization

parameters may be supplied to the information apparatus as components of a rasterization vector. In a given application, the rasterization vector may specify a value of only one rasterization parameter, default values being employed for other rasterization parameters used in the rasterization operation. In another application the rasterization vector may specify values of more than one, but less than all, rasterization parameters, default values being employed for at least one other rasterization parameter used in the rasterization operation. And in yet another application the rasterization vector may specify values of all the rasterization parameters used in the rasterization operation.

FIGS. **2**A and **2**B are block diagrams illustrating components of an operating environment that can implement the process and apparatus of present invention. FIG. **2**A shows an electronic system which includes an information apparatus **200** and an output device **220**. The output device **220** includes an output controller **230**. FIG. **2**B illustrates a second implementation of an electronic system that includes an information apparatus **200** and an output system **250**. The output system **250** includes an output device **220** and an output controller **230** which may be externally connected to, or otherwise associated with, the output device **220** in the output system **250**.

Information apparatus **200** is a computing device with processing capability. In one embodiment, information apparatus **200** may be a mobile computing device such as palmtop computer, handheld device, laptop computer, personal digital assistant (PDA), smart phone, screen phone, e-book, Internet pad, communication pad, Internet appliance, pager, digital camera, etc. It is possible that information apparatus **200** may also include a static computing device such as a desktop computer, workstation, server, etc.

FIGS. **3**A and **3**B are block diagrams illustrating examples of hardware/software components included in an information apparatus **200** of present invention.

Information apparatus **200** may contain components such as a processing unit **380**, a memory unit **370**, an optional storage unit **360** and an input/output control unit (e.g. communication manager **330**). Information apparatus **200** may include an interface (not shown) for interaction with users. The interface may be implemented with software or hardware or a combination. Examples of such interfaces include, without limitation, one or more of a mouse, a keyboard, a touch-sensitive or non-touch-sensitive screen, push buttons, soft keys, a stylus, a speaker, a microphone, etc.

Information apparatus **200** typically contains one or more network communication unit **350** that interfaces with other electronic devices such as network node (not shown), output device **220**, and output system **230**. The network communication unit may be implemented with hardware (e.g., silicon chipsets, antenna), software (e.g., protocol stacks, applications) or a combination.

In one embodiment of the present invention, communication interface **240** between information apparatus **200** and output device **220** or output system **250** is a wireless communication interface such as a short-range radio interface including those implemented according to the Bluetooth or IEEE 802.11 standard. The communication interface may also be realized by other standards and/or means of wireless communication that may include radio, infrared, cellular, ultrasonic, hydrophonic among others for accessing one or more network node and/or devices. Wired line connections such as serial or parallel interface, USB interface and fire wire (IEEE 1394) interface, among others, may also be included. Connection to a local network such as an Ethernet or a token Ring network, among others, may also be implemented in the present invention for local communication between information apparatus **200** and output device **220**. Examples of hardware/software components of communication units **350** that may be used to implement wireless interface between the information apparatus **200** and the output device **220** are described in more detail with reference to FIGS. **8**A and **8**B below.

For simplicity, FIG. **3** illustrates one implementation where an information apparatus **200** includes one communication unit **350**. However, it should be noted that an information apparatus **200** may contain more than one communication unit **350** in order to support different interfaces, protocols, and/or communication standards with different devices and/or network nodes. For example, information apparatus **200** may communicate with one output device **220** through a Bluetooth standard interface or through an IEEE 802.11 standard interface while communicating with another output device **220** through a parallel cable interface. The information apparatus **200** may also be coupled to a wired or wireless network (e.g. the Internet or corporate network) to send, receive and/or download information.

Information apparatus **200** may be a dedicated device (e.g., email terminal, web terminal, digital camera, e-book, web pads, Internet appliances etc.) with functionalities that are pre-configured by manufacturers. Alternatively, information apparatus **200** may allow users to install additional hardware components and or application software **205** to expand its functionality.

Information apparatus **200** may contain a plurality of applications **205** to implement its feature sets and functionalities. As an example, a document browsing or editing application may be implemented to help user view and perhaps edit, partially or entirely, digital documents written in certain format or language (e.g., page description language, markup language, etc.). Digital documents may be stored locally in the information apparatus **200** or in a network node (e.g., in content server). An example of a document browsing application is an Internet browser such as Internet Explorer, Netscape Navigator, or a WAP browser. Such browsers may retrieve and display content (e.g. digital content) written in mark-up languages such as HTML, WML, XML, CHTML, HDML, among others. Other examples of software applications in the information apparatus **200** may include a document editing software such as Microsoft Word™ which also allows users to view and or edit digital documents that have various file extensions (e.g., doc, rtf, html, XML etc.) whether stored locally in the information apparatus **200** or in a network node. Still, other example of software applications **205** may include image acquisition and editing software.

As illustrated previously with reference to FIG. **1**, there are many difficulties in providing output capability to an information apparatus **200** that has limited memory and processing capability. To address theses difficulties, information apparatus **200** includes a client application **210** that helps provide the universal data output capability of the present invention. Client application **210** may include software and data that can be executed by the processing unit **380** of information apparatus **200**. Client application **210** may be implemented as a stand-alone software application or as a part of or feature of another software application, or in the form of a device driver, which may be invoked, shared and used by other application software **205** in the information apparatus **200**. Client application **210** may also include components to invoke other applications **205** (e.g., a document browsing application, editing application, data and/or

image acquisition application, a communication manager, a output manager etc.) to provide certain feature sets, as described below. FIG. **3** illustrates a configuration where the client application **210** is a separate application from the other application **205** such as the case when the client application is a device driver; however, it should be noted that the client application **210** can be combined or being part of the other application not shown in FIG. **3**. Client application **210** may be variously implemented in an information apparatus **200** and may run on different operating systems or platforms. The client application **210** may also run in an environment with no operating system. For example, FIG. **3**A illustrates an implementation where the information apparatus **200**A includes an operating system **340**A; while FIG. **3**B illustrates an implementation where the information apparatus **200**B does not include an operating system.

Client application **210** includes a rasterization component **310** to conform content into one or more raster output images according to one or more rasterization parameters; an intermediate output data generator component **320** that generates and/or encodes intermediate output data that includes the one or more output images; and a communications manager **330** that manages the communication and interaction with an output device **220** or system **250** or output controller **230**. Communications manager can be implemented as part of the client application **210** (shown in FIG. **3**) or as a separate application (not shown). Components in a client application can be implemented in software, hardware or combination. As an example, client application **210** may include or utilize one or more of the following:

- Components or operations to obtain content (e.g. digital document) for output. The client application **210** may obtain a digital document from other applications **205** (e.g. document browsing application, content creation and editing application, etc.), or the client application **210** may provide its own capability for user to browse, edit and or select a digital document.
- Components or operations to rasterize content that includes text, graphics and images among others objects or elements into one or more raster images according to a set of rasterization parameters such as scale factor, output size, bit depth, color space and resolution. The rasterization parameters may be obtained in various ways, for example, from an output device profile uploaded from an output device **220**, or stored locally in information apparatus **200**, or manually inputted by a user. Alternatively, rasterization parameters may be based on a predefined standard or specification stored in the information apparatus **200** as a set of defaults, or hard-coded in the client application **210**, or calculated by the client application **210** after communicating with an output device **220**, output controller **230**, and/or a user.
- Components or operations to generate intermediate output data that includes at least one rasterized output image corresponding to the content (e.g. digital document). This process may further include one or combination of compression, encoding, encryption and color correction among others. The intermediate output data may include, for example, images, instructions, documents and or format descriptions, color profiles among others.
- Components or operations to transmit the intermediate output data to an output device **220** or system **250** through wired or wireless communication link **240**.

The client application **210** may also optionally include or utilize one or more of the following components or operations:

- Components or operations to communicate with one or more output devices **220** to upload an output device profile.
- Components or operations to communicate directly or indirectly (such as through an operating system or component or object model, messages, file transfer etc.) with other applications **205** residing in the same information apparatus **200** to obtain objects, data, and or content needed, or related to the pervasive output process of present invention (e.g. obtain a digital document for printing).
- Components or operations to manage and utilize directly or indirectly functionalities provided by hardware components (e.g. communication unit **350**) residing in its host information apparatus **200**.
- Components or operations to provide a graphical user interface (GUI) in host information apparatus to interact with user.
- Components or operations to obtain user preferences. For example, a user may directly input his or her preferences through a GUI. A set of default values may also be employed. Default values may be pre-set or may be obtained by information apparatus **200** as result of communicating and negotiating with an output device **220** or output controller **230**.

The above functionalities and process of client application **210** of present invention are described in further detail in the client application process with reference to FIG. **12**.

Output device **220** is an electronic system capable of outputting digital content regardless of whether the output medium is substrate (e.g., paper), display, projection, or sound. A typical example of output device **220** is a printer, which outputs digital documents containing text, graphics, image or any combination onto a substrate. Output device **220** may also be a display device capable of displaying still images or video, such as, without limitation, televisions, monitors, and projectors. Output device **220** can also be a device capable of outputting sound. Any device capable of playing or reading digital content in audio (e.g., music) or data (e.g., text or document) formats is also a possible output device **220**.

A printer is frequently referred to herein as an example of an output device to simplify discussion or as the primary output device **220** in a particular implementation. However, it should be recognized that present invention applies also to other output devices **220** such as fax machines, digital copiers, display screens, monitors, televisions, projectors, voice output devices, among others.

Rendering content with an output device **220** refers to outputting the content on a specific output medium (e.g., papers, display screens etc). For example, rendering content with a printer generates an image on a substrate; rendering content with a display device generates an image on a screen; and rendering content with an audio output device generates sound.

A conventional printing system in general includes a raster image processor and a printer engine. A printer engine includes memory buffer, marking engine among other components. The raster image processor converts content into an image form suitable for printing; the memory buffer holds the rasterized image ready for printing; and the marking engine transfers colorant to substrate (e.g., paper).

The raster image processor may be located within an output device (e.g. included in a printer controller **410**) or externally implemented (in an information apparatus **200**, external controller, servers etc). Raster image processor can be implemented as hardware, software, or a combination

(not shown). As an example, raster image processor may be implemented in a software application or device driver in the information apparatus **200**. Examples of raster image processing operations include image and graphics interpretation, rasterization, scaling, segmentation, color space transformation, image enhancement, color correction, halftoning, compression etc.

FIG. **4**A illustrates a block diagram of one conventional printing system or printer **400**A that includes a printer controller **410** and a printer engine **420**A. The printer controller **410** includes an interpreter **402** and a raster image processor **406**, and the printer engine **420** includes memory buffer **424**A and a marking engine **426**A.

Marking engine may use any of a variety of different technologies to transfer a rasterized image to paper or other media or, in other words, to transfer colorant to a substrate. The different marking or printing technologies that may be used include both impact and non-impact printing. Examples of impact printing may include dot matrix, teletype, daisywheel, etc. Non-impact printing technologies may include inkjet, laser, electrostatic, thermal, dye sublimation, etc.

The marking engine **426** and memory buffer **424** of a printer form its printer engine **420**, which may also include additional circuitry and components, such as firmware, software or chips or chipsets for decoding and signal conversion, etc. Input to a printer engine **420** is usually a final rasterized printer-engine print data generated by a raster image processor **406**. Such input is usually device dependent and printer or printer engine specific. The printer engine **420** may take this device dependent input and generate or render output pages (e.g. with ink on a substrate).

When a raster image processor is located inside an output device **220**, it is usually included in a printer controller **410** (as shown in FIG. **4**A). A printer controller **410** may interpret, rasterize, and convert input print data in the form of a page description language (e.g., PostScript, PCL), markup language (e.g., XML, HTML) or other special document format or language (e.g. PDF, EMF) into printer-engine print data which is a final format, language or instruction that printer engine **420**A can understand.

Print data sent to a printer with printer controller **410** is usually in a form (e.g. postscript) that requires further interpretation, processing or conversion. A printer controller **410** receives the print data, interprets, process, and converts the print data into a form that can be understood by the printer engine **420**A. Regardless of the type of print data, conventionally, a user may need a device-specific driver in his or her information apparatus **200** in order to output the proper language, format, or file that can be accepted by a specific printer or output device **220**.

FIG. **4**B illustrates another conventional output device **400**B. Output device **400**B may be a printing device, a display device, a projection device, or a sound device. In the case that the output device is a printing device or a printer, the printer with reference to FIG. **4**B does not include a printer controller **410**. As an example, printer **400**B may be a low-cost printer such as a desktop inkjet printer. RIP operations in this example may be implemented in a software application or in a device driver included in an information apparatus **200**. The information apparatus **200** generates device dependent output data (or print data in case of a printer) by rasterizing and converting a digital document into output data (e.g. into a compressed CMKY data with one or more bits per pixel) that can be understood by an output engine (or printer engine in case of a printer) **420**B.

Regardless of type or sophistication level, different output device **220** conventionally needs different printer drivers or output management applications in an information apparatus **200** to provide output capability. Some mobile devices with limited memory and processing power may have difficulty storing multiple device drivers or perform computational intensive RIP operations. It may also be infeasible to install a new device dependent or specific printer driver each time there is a need to print to a new printer. To overcome these difficulties, present invention provides several improvements to output device **220** or output system **250** as described in detail next.

In present invention, output device **220** may include an output controller **230** to help managing communication and negotiation processes with an information apparatus **200** and to process output data. Output controller **230** may include dedicated hardware or software or combination of both for at least one output device **220**. Output controller **230** may be internally installed, or externally connected to one or more output devices **220**. The output controller **230** is sometimes referred to as a print server or output server.

FIGS. **5**A and **5**B illustrate two exemplary internal implementations of the output controller **230** of present invention. FIG. **5**A illustrates the implementation of an output controller **230** inside a conventional printer with reference to FIG. **4**A, which includes a conventional printer controller **410** (**5**A). The output controller **230**(**5**A) includes an interpreter **510**A component for decoding the intermediate output data of present invention; and a converter component **530**A for converting one or more decoded output images into a printer-controller print data that is suitable for input to the printer controller **410**(**5**A). An optional image processing component **520**A may be included in the output controller **230**(**5**A).

FIG. **5**B illustrates the implementation of an output controller **230** included internally in a conventional output device **220** with reference to FIG. **4**B, which does not include a printer controller. The output controller **230**(**5**B) includes an interpreter **510**B component for decoding the intermediate output data of present invention; an image processor **520**B component for performing one or more image processing operations such as color space conversion, color matching and digital halftoning; and an optional encoder **530**B component to conform the processed output images into an output-engine output data that is suitable for input to the output engine **420**B if the result of the image processing is not already in required form suitable for the output engine **420**B.

In one implementation, output device **220** may include a communication unit **550** or adapter to interface with information apparatus **200**. Output device **220** may sometimes include more than one communication unit **550** in order to support different interfaces, protocols, or communication standards with different devices. For example, output device **220** may communicate with a first information apparatus **200** through a Bluetooth interface while communicating with a second information apparatus **200** through a parallel interface. Examples of hardware components of a wireless communication unit are described in greater detail below with reference to FIGS. **8**A and **8**B.

In one embodiment, output controller **230** does not include a communication unit, but rather utilizes or manages a communication unit residing in the associated output device **220** such as the illustration in FIG. **5**. In another embodiment, output controller **230** may include or provide a communication unit to output device **220** as shown in FIG. **6**. For example, an output controller **230** with a wireless

communication unit may be installed internally or connected externally to a legacy printer to provide it with wireless communication capability that was previously lacking.

FIG. **6** includes three functional block diagrams illustrating the hardware/software components of output controller **230** in three different implementations. Each components of an output controller **230** may include software, hardware, or combination. For example, an output controller **230** may include components using one or more or combinations of an application-specific integrated circuit (ASIC), a digital signal processor (DSP), a field programmable gate array (FPGA), firmware, system on a chip, and various communication chip sets. Output controller **230** may also contain embedded processors **670** A with software components or embedded application software to implement its feature sets and functionalities.

Output controller **230** may contain an embedded operating system **680**. With an operating system, some or all functionalities and feature sets of the output controller **230** may be provided by application software managed by the operating system. Additional application software may be installed or upgraded to newer versions in order to, for example, provide additional functionalities or bug fixes. FIG. **6**A and FIG. **6**C illustrates examples of implementation with an operating system **680** while FIG. **6**B illustrates an example without the operating system **680** or the optional embedded processor **670**.

Output controller **230** typically includes a memory unit **640**, or may share a memory unit with, for example, printer controller **410**. The memory unit and storage unit, such as ROM, RAM, flash memory and disk drive among others, may provide persistent or volatile storage. The memory unit or storage unit may store output device profiles, objects, codes, instructions or data (collectively referred to as software components) that implement the functionalities of the output controller **230**. Part of the software components (e.g., output device profile) may be uploaded to information apparatus **200** during or before a data output operation.

An output controller **230** may include a processor component **670**A and **670**C, a memory component **650**, an optional storage component **640**, and an optional operating system component **680**. FIG. **6** shows one architecture or implementation where the memory **650**, storage **640**, processor **670**, and operating system **680** components, if exist, can be share or accessed by other operational components in the output controller **230** such as the interpreter **610** and image processor **650**. FIG. **6** shows two communication units **660**A and **660**B included in the output controller **230**; however, the output controller **230** of present invention may include any number of communication units **660**. It is also possible that the output controller does not contain any communication unit but rather utilizes the communication unit of an output device.

The output controller **230** may be connected externally to an output device **220** or integrated internally into the output device **220**. FIGS. **5**A and **5**B illustrate implementations of output controller **230** inside an output device **220**. The output controller **230**, however, may also be implemented as an external box or station that is wired or wirelessly connected to an output device **220**. An output controller **230** implemented as an external box or station to an output device **220** may contain its own user interface. One example of such an implementation is a print server connected to an output device **220** in an output system **250**. Another configuration and implementation is to integrate or combine the functionalities of an output controller **230** with an existing printer controller **410** (referred to as "combined controller") if the output device **220** is a printer as shown with reference to FIG. **7**C or **7**F. A combined controller can also be internally integrated or externally connected to output device **220**, and include functionalities of both printer controller **410** (e.g., input interpretation and or raster image processing) and output controller **230** of present invention. One advantage of this configuration is that the functionalities or components of output controller **230** and printer controller **410** may share the same resources, such as processing unit, memory unit, etc. FIG. **6**C illustrates an example of a combined controller implementation or output controller **230** where the printer controller **410**C, interpreter **610**C and converter **630**C shares the use of the processor **670**C, memory **650**C and storage **640**C, managed by an operating system **680**C. Various exemplary implementations and configurations of an output controller **230** with respect to an output device **220** or output system **250** are illustrated in further detail with reference to FIG. **7**.

Other possible implementations of output controller **230** may include, for example, a conventional personal computer (PC), a workstation, and an output server or print server. In these cases, the functionalities of output controller **230** may be implemented using application software installed in a computer (e.g., PC, server, or workstation), with the computer connected with a wired or wireless connection to an output device **220**. Using a PC, server, workstation, or other computer to implement the feature sets of output controller **230** with application software is just another possible embodiment of the output controller **230** and in no way departs from the spirit, scope and process of the present invention.

The difference between output controller **230** and printer controller **410** should be noted. Printer controller **410** and output controller **230** are both controllers and are both dedicated hardware and or software for at least one output device **220**. Output controller **230** refers to a controller with feature sets, capabilities, and functionalities of the present invention. A printer controller **410** may contain functions such as interpreting an input page description language, raster image processing, and queuing, among others. An output controller **230** may include part or all of the features of a printer controller **410** in addition to the feature sets, functionalities, capabilities, and processes of present invention.

Functionalities and components of output controller **230** for the purpose of providing universal data output may include or utilize:

- Components and operations to receive output data from a plurality of information apparatus **200**; the output data may include an intermediate output data containing at least one rasterized image related to the data content intended for output.
- Components and operations to interpret and/or decode the intermediate output data.
- Components and operations to process the intermediate output data. Such components and operations may include image processing functions such as scaling, segmentation, color correction, color management, GCR, image enhancement, decompression, decryption, and or halftoning among others.
- Components and operations to generate an output-engine output data, the output-engine output data being in an output data format acceptable for input to an output engine.
- Components and operations to send the output-engine output data to the output engine.

When associated with an output device **220** that includes a printer controller **410**, the output controller of present invention may further include or utilize:

- Components and operations to convert the intermediate output data into a printer-controller print data (e.g. a PDL such as PostScript and PCL), the printer-controller print data being in a format acceptable to a printer controller.
- Components and operations to send printer-controller print data to one or more printer controllers.

In addition to the above components and functionalities, output controller **230** may further include one or more of the following:

- Components and operations to communicate with one or more information apparatus **200** through a wired or wireless interface.
- Components and operations to communicate and or manage a communication unit included in the output controller **230** or output device **220**.
- Components and operations to store at least part of an output device profile (a printer profile in case of a printer) in a memory component.
- Components and operations to respond to service request from an information apparatus **200** by transmitting at least part of an output device profile to the information apparatus requesting service. The output controller **230** may transmit the output device profiles or object in one or multiple sessions.
- Components and operations to broadcast or advertise the services provided by a host output device **220** to one or more information apparatus **200** that may request such services.
- Components and operations to implement payment processing and management functions by, for example, calculating and processing payments according to the services requested or rendered to a client (information apparatus **200**).
- Components and operations to provide a user interface such as display screen, touch button, soft key, etc.
- Components and operations to implement job management functions such as queuing and spooling among others.
- Components and operations to implement security or authentication procedures. For example, the output controller **230** may store in its memory component (or shared memory component) an access control list, which specifies what device or user may obtain service from its host (or connected) output device **220**. Therefore, an authorized information apparatus **200** may gain access after confirming with the control list.

When output controller **230** is implemented as firmware, or an embedded application, the configuration and management of the functionalities of output controller **230** may be optionally accomplished by, for example, using controller management software in a host computer. A host computer may be a desktop personal computer (PC), workstation, or server. The host computer may be connected locally or through a network to the output device **220** or the controller **230**. Communication between the host computer and the output controller **230** can be accomplished through wired or wireless communication. The management application software in the host computer can manage the settings, configurations, and feature sets of the output controller **230**. Furthermore, host computer's configuration application may download and or install application software, software components and or data to the output controller **230** for the purpose of upgrading, updating, and or modifying the features and capabilities of the output controller **230**.

Output device **220** in one implementation includes or is connected to output controller **230** described above. Therefore, functionalities and feature sets provided by output controller **230** are automatically included in the functionalities of output device **220**. The output device **220** may, however, implement or include other controllers and/or applications that provide at least partially the features and functionalities of the output controller **230**.

Therefore, the output device **220** may include some or all of the following functionalities:

- Components and operations to receive multiple service requests or queries (e.g., a service request, a data query, an object or component query etc.) from a plurality of information apparatus **200** and properly respond to them by returning components, which may contain data, software, instructions and/or objects.
- Components and operations to receive output data from a plurality of information apparatus **200**; the output data may include an intermediate output data containing one or more rasterized image related to the content intended for output.
- Components and operations to interpret and/or decoding the intermediate output data.
- Components and operations to process and/or convert the intermediate output data into a form (e.g. output-engine print data) suitable for rendering at an output engine associated with the output device.
- Components and operations to render a representation or an image related to the content onto an output medium (e.g. substrate or a display screen).

An output device **220** may further comprise optionally one or more of the following functionalities:

- Components and operations for establishing and managing a communication link with an information apparatus **200** requesting service; the communication link may include wired or wireless communication.
- Components and operations for storing at least part of an output device profile (e.g. printer profile) in a memory component.
- Components and operations to provide at least part of an output device profile (e.g., printer profile in case of a printer) to one or more information apparatus **200** requesting service. The output device **220** may transmit the output device profile in one or multiple sessions.
- Components and operations to advertise or broadcast services provided or available to one or more information apparatus **200**.
- Components and operations to implement payment processing and management functions by, for example, calculating and processing payments according to the services requested by or rendered to a client (information apparatus **200**).
- Components and operations to implement job management functionalities such as queuing and spooling among others.
- Components and operations to provide a user interface such as display screen touch button, soft key, power switch, etc.
- Components and operations to implement security or authentication procedures. For example, the output device **220** may store in its memory component (or a shared memory component) an access control list, which specifies what device or user may obtain service

from it. Therefore, an authorized information apparatus **200** may gain access after confirming with the control list.

FIGS. **7**A-**7**F illustrate various alternative configurations and implementations of output controller **230** with respect to an output device **230**. Printer is sometimes used as an exemplary output device **230** to demonstrate the various configurations. It should be understood, however, the output device **230** of present invention is not limited to printers.

As described with reference to FIG. **4**, a printer may or may not contain a printer controller **410**. Printer **400**A that includes a printer controller **410** typically has higher speed and is more expensive than printer **400**B which does not include a printer controller **410**.

FIG. **7**A shows that output controller **230** may be cascaded externally to one or more printers (only one shown). Information apparatus **200** communicates with output controller **230**A, which then communicates with output device **220** such as a printer **220**A. The communication link between the output controller **230**A and the printer **220**A may be a wired link or a wireless link, as described above. FIGS. **6**A and **6**B illustrates two examples of functional component design of the output controller that can implement the configuration illustrated in FIG. **7**A. The Image processor **620** in this implementation is optional.

FIG. **7**B shows another implementation in which output controller **230**B is installed as one or more circuit boards or cards internally inside printer **220**B. The output controller **230**B may co-exist with printer controller **410** and other components of the printer **220**B. One example of this implementation is to connect output controller **230**B sequentially with the printer controller **310**. FIG. **5**A shows as an example of an implementation.

FIG. **7**C shows another implementation in which the functionalities of output controller **230** and printer controller **410** are combined into a single controller (referred to as "combined controller") **230**C. In this implementation, it is possible to reduce the cost of material when compared to implementing two separate controllers as shown in FIG. **7**B. As an example, the combined controller **230**C may share the same processors, memories, and storages to run the applications and functionalities of the two types of controllers and therefore, may have lower component costs when compared to providing two separate controllers. FIG. **6**C illustrates an example of a combined controller functional component implementation.

Some printers do not include a raster image processor or printer controller **410**, as illustrated in FIG. **4**B. An example of this type of printer is a lower cost desktop inkjet printer. Input to an inkjet printer may consist of a compressed CMYK data (proprietary or published) with one or more bits per pixel input. To output to a printer that does not include a printer controller, a device specific software application or a printer driver is typically required in an information apparatus **200** to perform raster image processing operations. Accordingly, output controller **230** can be implemented into a variety of output devices **220** and/or output systems **250** including printers that do not have printer controllers for performing raster image processing operations.

FIG. **7**D and FIG. **7**E illustrate two implementations of output controller **230** in an output device **220** or system **250**. The output device **230** or system **250** may include a display device, a projection device, an audio output device or a printing device. In the case when the output device **220**D or **220**E is a printer, it does not include a printer controller. FIG. **7**D illustrates an implementation of an output controller **230**D installed as an external component or "box" to output device **220**D. For example, the output controller **230** may be implemented as an application in a print server or as a standalone box or station. In this configuration, some or all of raster image processing operations may be implemented in the output controller **230**D. Output controller **230**D receives intermediate output data from an information apparatus **200** and generates output-engine output data that is acceptable to the output engine included in the output device **220**D. The output controller **230**D may send the output data to the output device **220**D through a wired or wireless communication link or connection. FIGS. **6**A and **6**B illustrates two example of functional component design of the output controller that can implement the configurations for both FIGS. **7**D and **7**E.

FIG. **7**E shows a fifth implementation of output controller **230**E in which the output controller **230**E is incorporated within output device **220**E as one or more circuit boards or cards and may contain software and applications running on an embedded processor. As with output device **220**D (FIG. **7**D), output device **220**E does not include a printer controller **410**. Accordingly, the output controller **230**E implements the functionalities and capabilities of present invention that may include part of or complete raster imaging processing operation.

FIG. **7**F shows a sixth implementation, an external combined controller **230**F that integrates the functionalities of a printer controller **310** and an output controller into a single external combined controller component or "box" **230**F. The two controller functions may share a common processor as well as a common memory space to run applications of the two types of controllers. Under this configuration, either information apparatus **200** or the combined controller **230**F could perform or share at least part of raster image processing functionality. FIG. **6**C shows an example of functional components of a combined controller **230**F.

Another implementation of the combined controller **230**F shown in FIG. **7**F is to use an external computing device (PC, workstation, or server) running one or more applications that include the functionality of output controller **230** and printer controller **410**.

The above are examples of different implementations and configurations of output controller **230**. Other implementations are also possible. For example, partial functionalities of output controller **230** may be implemented in an external box or station while the remaining functionalities may reside inside an output device **220** as a separate board or integrated with a printer controller **410**. As another example, the functionalities of output controller **230** may be implemented into a plurality of external boxes or stations connected to the same output device **220**. As a further example, the same output controller **230** may be connected to service a plurality of output devices **220**

FIGS. **8**A and **8**B are block diagrams illustrating two possible configurations of hardware/software components of wireless communication units. These wireless communication units can be implemented and included in information apparatus **200**, in output controller **230** and in output device **220**. Referring to FIG. **8**A, a radio adapter **800** may be implemented to enable data/voice transmission among devices (e.g., information apparatus **200** and output device **220**) through radio links. An RF transceiver **814** coupled with antenna **816** is used to receive and transmit radio frequency signals. The RF transceiver **814** also converts radio signals into and from electronic signals. The RF transceiver **814** is connected to an RF link controller **810** by an interface **812**. The interface **812** may perform functions

such as analog-to-digital conversion, digital-to-analog conversion, modulation, demodulation, compression, decompression, encoding, decoding, and other data or format conversion functions.

RF link controller **810** implements real-time lower layer (e.g., physical layer) protocol processing that enables the hosts (e.g., information apparatus **200**, output controller **230**, output device **220**, etc.) to communicate over a radio link. Functions performed by the link controller **810** may include, without limitation, error detection/correction, power control, data packet processing, data encryption/decryption and other data processing functions.

A variety of radio links may be utilized. A group of competing technologies operating in the 2.4 GHz unlicensed frequency band is of particular interest. This group currently includes Bluetooth, Home radio frequency (Home RF) and implementations based on IEEE 802.11 standard. Each of these technologies has a different set of protocols and they all provide solutions for wireless local area networks (LANs). Interference among these technologies could limit deployment of these protocols simultaneously. It is anticipated that new local area wireless technologies may emerge or that the existing ones may converge. Nevertheless, all these existing and future wireless technologies may be implemented in the present invention without limitation, and therefore, in no way depart from the scope of present invention.

Among the currently available wireless technologies, Bluetooth may be advantageous because it requires relatively lower power consumption and Bluetooth-enabled devices operate in piconets, in which several devices are connected in a point-to-multipoint system. Referring to FIG. **8**B, one or more infrared (IR) adapters **820** may be implemented to enable data transmission among devices through infrared transmission. The IR adapters **820** may be conveniently implemented in accordance with the Infrared Data Association (IrDA) standards and specifications. In general, the IrDA standard is used to provide wireless connectivity technologies for devices that would normally use cables for connection. The IrDA standard is a point-to-point (vs. point-to-multipoint as in Bluetooth), narrow angle, ad-hoc data transmission standard.

Configuration of infrared adapters **820** may vary depending on the intended rate of data transfer. FIG. **8**B illustrates one embodiment of infrared adapter **820**. Transceiver **826** receives/emits IR signals and converts IR signals to/from electrical signals. A UART (universal asynchronous receiver/transmitter) **822** performs the function of serialization/deserialization, converting serial data stream to/from data bytes. The UART **822** is connected to the IR transceiver **826** by encoder/decoder (ENDEC) **824**. This configuration is generally suitable for transferring data at relatively low rate. Other components (e.g., packet framer, phase-locked loop) may be needed for higher data transfer rates.

FIGS. **8**A and **8**B illustrate exemplary hardware configurations of wireless communication units. Such hardware components may be included in devices (e.g., information apparatus **200**, output controller **230**, output device **220**, etc.) to support various wireless communications standards. Wired links, however, such as parallel interface, USB, Firewire interface, Ethernet and token ring networks may also be implemented in the present invention by using appropriate adapters and configurations.

FIG. **9** is a logic flow diagram of an exemplary raster imaging process (RIP) **902** that can implement the universal output method of present invention. Content (e.g. digital document) **900** may be obtained and/or generated by an application running in an information apparatus **200**. For example, a document browsing application may allow a user to download and or open digital document **900** stored locally or in a network node. As another example, a document creating or editing application may allow a user to create or edit digital documents in his/her information apparatus **200**.

A client application **210** in the information apparatus may be in the form of a device driver, invoked by other applications residing in the information apparatus **200** to provide output service. Alternatively, the client application **210** of present invention may be an application that includes data output and management component, in addition of other functionalities such as content acquisitions, viewing, browsing, and or editing etc. For example, a client application **210** in an information apparatus **200** may itself include components and functions for a user to download, view and or edit digital document **900** in addition of the output management function described herein.

Raster image process method **902** allows an information apparatus **200** such as a mobile device to pervasively and conveniently output content (e.g. a digital document) to an output device **220** or system **250** that includes an output controller **230**. A client application **210** in an information apparatus **200** may perform part of raster image processing operations (e.g. rasterization operation). Other operations of raster image processing such as halftoning can be completed by the output device **220** or by the output controller **230**. In conventional data output methods, raster image processing is either implemented entirely in an information apparatus (e.g. a printer that does not include a printer controller with reference to FIG. **1**A) or in an output device (e.g. a printer that includes a printer controller with reference to FIG. **1**B). Present invention provides a more balanced approach where raster image process operations are shared between an information apparatus **200** and an output device **220** or system **250**. For example, content **600** may be processed (e.g. raster image processed) by different components or parts of an overall output system from a client application **210** to an output controller **230** before being sent to an output engine or a printer engine for final output in step **960**. Because the raster image processing operations are not completely implemented in the information apparatus **200**, there is less processing demand on the information apparatus **200**. Therefore, present RIP process may enable additional mobile devices with less memory and processing capability to have data output capability.

In step **910**, rasterization operation, a content (e.g. digital document), which may include text, graphics, and image objects, is conformed or rasterized to image form according to one or more rasterization parameters such as output size, bit depth, color space, resolution, number of color channels etc. During the rasterization operation, text and vector graphics information in the content are rasterized or converted into image or bitmap information according to a given set of rasterization parameters. Image information in the content or digital document may be scaled and or interpolated to fit a particular output size, resolution and bit depth etc. The rasterization parameters are in general device dependent, and therefore may vary according to different requirements and attributes of an output device **220** and its output engine. There are many ways to obtain device dependent rasterization parameters, as described in more detail below with reference to FIG. **12**A. Device dependent rasterization parameters, in one example, may be obtained from an output device profile stored in an information apparatus **200**, an output device **220** or an output controller **230**.

In an alternative implementation, rasterization parameters may be predetermined by a standard or specification. In this implementation, in step **910** the content **900** is rasterized to fit or match this predefined or standard rasterization parameters. Therefore, the rasterized output image becomes device independent. One advantage of being device independent is that the rasterized output image is acceptable with controllers, devices and/or output devices implemented or created with the knowledge of such standard or specification. A rasterized image with predefined or standardized attributes is usually more portable. For example, both the client application **210** and output device **220** or its output controller **230** may be preprogrammed to receive, interpret, and or output raster images based on a predefined standard and/or specification.

Occasionally, a predefined standard or specification for rasterization parameters may require change or update. One possible implementation for providing an easy update or upgrade is to store information and related rasterization parameters in a file or a profile instead of hard coding these parameters into programs, components or applications. Client application **210**, output controller **230**, and/or the output device **220** can read a file or a profile to obtain information related to rasterization parameters. To upgrade or update the standard specification or defaults requires only replacing or editing the file or the profile instead of replacing a software application or component such as the client application **210**.

In step **920** the rasterized content in image form is encoded into an intermediate output data. The intermediate output data, which describes the output content, may include image information, instructions, descriptions, and data (e.g. color profile). The rasterized output image may require further processing including one or more of compression, encoding, encryption, smoothing, image enhancement, segmentation, color correction among others before being stored into the intermediate output data. The output image in the intermediate output data may be encoded in any image format and with any compression technique such as JPEG, BMP, TIFF, JBIG etc. In one preferred embodiment, a mixed raster content (MRC) format and its related encoding and/or compression methods are used to generate the output image. The advantages of using MRC over other image formats and techniques may include, for example, better compression ratio, better data information retention, smaller file size, and or relatively better image quality among others.

In step **930**, the intermediate output data is transmitted to the output device **220** or output system **250** for further processing and final output. The transmission of the intermediate output data may be accomplished through wireless or wired communication links between the information apparatus **200** and the output device **220** and can be accomplished through one or multiple sessions.

In step **940**, the output device **220** or output system **250** receives the transmitted intermediate output data. The output device **220** or output system **250** may include an output controller **230** to assist communicating with the information apparatus **200** and/or processing the intermediate output data. Output controller **230** may have a variety of configurations and implementations with respect to output device **220** as shown in FIG. **7**A-**7**F. Interpretation process **940** may include one or more of parsing, decoding, decompression, decryption, image space conversion among other operations if the received intermediate output data requires such processing. An output image is decoded or retrieved from the intermediate output data and may be temporarily stored in a buffer or memory included in the output device/output system (**220**/**250**) or output controller **230** for further processing.

If the intermediate output data includes components with MRC format or encoding techniques, it may contain additional segmented information (e.g. foreground and background), which can be used to enhance image quality. For example, different techniques or algorithms in scaling, color correction, color matching, image enhancement, anti-aliasing and or digital halftoning among others may be applied to different segments or layers of the image information to improve output quality or maximize retention or recovery of image information. Multiple layers may later be combined or mapped into a single layer. These image processing and conversion components and/or operations can be included in the output controller **230** of present invention.

In step **950**, the decoded or retrieved output image from the intermediate output data may require further processing or conversion. This may include one or more of scaling, segmentation, interpolation, color correction, GCR, black generation, color matching, color space transformation, anti-aliasing, image enhancement, image smoothing and or digital halftoning operations among others.

In an embodiment where the output device **220** does not include a printer controller, an output controller **230** or an output device **220** that includes output controller, after performing the remaining portion of RIP operations (e.g. color space conversion and halftoning) on the output image, may further convert the output data in step **950** into a form that is acceptable for input to a printer engine for rendering.

In an alternative embodiment where the output device **220** or the output system **250** includes a conventional printer controller, the output controller may simply decodes and or converts the intermediate output data (print data in this example) into format or language acceptable to the printer controller. For example, a printer controller may require as input a page description language (e.g. PostScript, PCL, PDF, etc.), a markup language (HTML, XML etc) or other graphics or document format. In these cases, the output controller **230** may interpret, decompress and convert the intermediate print data into an output image that has optimal output resolution, bit depth, color space, and output size related to the printer controller input requirements. The output image is then encoded or embedded into a printer-controller print data (e.g. a page description language) and sent to the printer controller. A printer-controller print data is a print data that is acceptable or compatible for input to the printer controller. After the printer controller receives the printer-controller print data, the printer controller may further perform operations such as parsing, rasterization, scaling, color correction, image enhancement, halftoning etc on the output image and generate an appropriate printer-engine print data suitable for input to the printer engine.

In step **960**, the output-engine output data or printer-engine print data generated by the output controller **230** or the printer controller in step **950** is sent to the output engine or printer engine of the output device for final output.

FIG. **10** illustrates a flow diagram of a universal data output process of the present invention that includes the raster image processing illustrated with reference to FIG. **9**. A universal data output process allows an information apparatus **200** to pervasively output content or digital document to an output device. The data output process may include or utilize:

A user interface component and operation where a user initiates an output process and provides an indication of the selected output content (e.g. digital document) for output.

A client application component or operation that processes the content indicated for output, and generates an intermediate output data. The intermediate output data may include at least partly a raster output image description related to the content.

An information apparatus component or operation that transmits the intermediate output data to one or more selected output device **220**.

An output device component (e.g. output controller) or operation that interprets the intermediate output data and may further process or convert the output data into a form more acceptable to an output engine for rendering of the content.

With reference to FIG. **10**, a user in step **1000** may initiate the universal output method or process **1002**. Typically, a user initiates the output process by invoking a client application **210** in his/her information apparatus **200**. The client application **210** may be launched as an independent application or it may be launched from other applications **205** (such as from a document browsing, creating or editing application) or as part of or component of or a feature of another application **205** residing in the same information apparatus **200**. When launched from another application **205**, such as the case when the client application is a device driver or helper application, the client application **210** may obtain information, such as the content (e.g. digital document) from that other application **205**. This can be accomplished, for example, by one or combinations of messages or facilitated through an operating system or a particular object or component model etc.

During output process **1002**, a user may need to select one or more output devices **220** for output service. An optional discovery process step **1020** may be implemented to help the user select an output device **220**. During the discovery process step **1020**, a user's information apparatus **200** may (1) search for available output devices **220**; (2) provide the user with a list of available output devices **220**; and (3) provide means for the user to choose one or more output devices **220** to take the output job. An example of a discovery process **1020** is described below in greater detail with reference to FIG. **11**.

The optional discovery process **1020** may sometimes be unnecessary. For example, a user may skip the discovery process **1020** if he or she already knows the output device (e.g., printer) **220** to which the output is to be directed. In this case, the user may simply connect the information apparatus **200** to that output device **220** by wired connections or directly point to that output device **220** in a close proximity such as in the case of infrared connectivity. As another example, a user may pre-select or set the output device or devices **220** that are used frequently as preferred defaults. As a result, the discovery process **1020** may be partially or completely skipped if the default output device **220** or printer is found to be available.

In stage **1030**, the client application may interact with output device **220**, the user, and/or other applications **205** residing in the same information apparatus **200** to (1) obtain necessary output device profile and/or user preferences, (2) perform functions or part of raster image processing operations such as rasterization, scaling and color correction, and/or (3) convert or encode at least partially the rasterized content (e.g. digital document) into an intermediate output data. The processing and generation of the intermediate output data may reflect in part a relationship to an output device profile and/or user preferences obtained, if any. The intermediate output data generated by the client application **210** is then transmitted through wired or wireless local communication link(s) **240** to the output controller **230** included or associated with the selected output device **220** or output system **250**. An exemplary client application process is described in greater detail with reference to FIG. **12**.

In step **1040**, the output controller **230** of present invention receives the intermediate output data. In the case where the selected output device **230** does not include a printer controller, the output controller **230** of present invention may further perform processing functions such as parsing, interpreting, decompressing, decoding, color correction, image enhancement, GCR, black generation and halftoning among others. In addition, the output controller **230** may further convert or conform the intermediate output data into a form or format suitable for the output engine (e.g. printer engine in the case of a printer). The generated output-engine output data from the output controller is therefore, in general, device dependent and acceptable for final output with the output engine (or the printer engine in case of a printer) included in the selected output device **220** or output system **250**.

In the case where the selected output device **220** is a printer, and when the printer includes or is connected to a printer controller, the output controller **230** may generate the proper language or input format required to interface with the printer controller (referred to as printer-controller print data). The printer controller may for example require a specific input such as a page description language (PDL), markup language, or a special image or graphics format. In these cases, the output controller **230** in step **1040** may interpret and decode the intermediate output data, and then convert the intermediate output data into the required printer-controller print data (e.g. PDL such as PostScript or PCL). The printer-controller print data generated by the output controller is then sent to the printer controller for further processing. The printer controller may perform interpretation and raster image processing operations among other operations. After processing, the printer controller generates a printer-engine print data suitable for rendering at the printer engine.

In either case, the output controller **230** or printer controller generates an output-engine output data that is suitable for sending to or interfacing with the output engine or the printer engine included in the output device for rendering. The output data may be temporarily buffered in components of the output device **220**. An implementation of the output device process **1040** is described in greater detail with reference to FIG. **13**.

The steps included in the universal pervasive output process **1002** may proceed automatically when a user requests output service. Alternatively, a user may be provided with options to proceed, cancel, or input information at each and every step. For example, a user may cancel the output service at any time by, for example, indicating a cancellation signal or command or by terminating the client application **210** or by shutting down the information apparatus **200** etc

FIG. **11** is a flow diagram of an example of a discovery process **720**, which may be an optional step to help a user locate one or more output devices **220** for an output job. The discovery process **1020** may, however, be skipped partially or entirely. Implementation of discovery process **1020** may require compatible hardware and software components residing in both the information apparatus **200** and the

output device **220**. The information apparatus **200** may utilize the client application **210** or other application **205** in this process. The discovery process **1020** may include:

- An information apparatus **200** communicating with available output devices **220** to obtain information and attributes relating to the output device **220** and or its services such as output device capability, feature sets, service availability, quality of service, condition.
- An Information apparatus **200** provides the user information on each available and or compatible output devices **220**.
- A user selects or the client application **210** (automatically or not) selects one or more output devices **220** for the output service from the available or compatible output devices **220**.

Various protocols and or standards may be used during discovery process **1020**. Wireless communication protocols are preferred. Wired communication, on the other hand, may also be implemented. Examples of applicable protocols or standards may include, without limitation, Bluetooth, HAVi, Jini, Salutation, Service Location Protocol, and Universal Plug-and-play among others. Both standard and proprietary protocols or combination may be implemented in the discovery process **1020**. However, these different protocols, standards, or combination shall not depart from the spirit and scope of present invention.

In one implementation an application (referred here for simplicity of discussion as a "communication manager," not shown) residing in the information apparatus **200** helps communicate with output device **220** and manages service requests and the discovery process **1020**. The communication manager may be a part of or a feature of the client application **210**. Alternatively or in combination, the communication manager may also be a separate application. When the communication manager is a separate application, the client application **210** may have the ability to communicate, manage or access functionalities of the communication manager.

The discovery process **1020** may be initiated manually by a user or automatically by a communication manager when the user requests an output service with information apparatus **200**.

In the optional step **1100**, a user may specify searching or matching criteria. For example, a user may indicate to search for color printers and or printers that provide free service. The user may manually specify such criteria each time for the discovery process **1020**. Alternatively or in combination, a user may set default preferences that can be applied to a plurality of discovery processes **1020**. Sometimes, however, no searching criteria are required: the information apparatus **200** may simply search for all available output devices **220** that can provide output service.

In step **1101**, information apparatus **200** searches for available output devices **220**. The searching process may be implemented by, for example, an information apparatus **200** (e.g. with the assistance of a communication manager) multi-casting or broadcasting or advertising its service requests and waiting for available output devices **220** to respond. Alternatively or in combination, an information apparatus **200** may "listen to" service broadcasts from one or more output devices **220** and then identify the one or more output devices **220** that are needed or acceptable. It is also possible that multiple output devices **220** of the same network (e.g., LAN) register their services with a control point (not shown). A control point is a computing system (e.g., a server) that maintains records on all service devices within the same network. An information apparatus **200** may contact the control point and search or query for the needed service

In step **1102**, if no available output device **220** is found, the communication manager or the client application **210** may provide the user with alternatives **1104**. Such alternatives may include, for example, aborting the discovery process **1020**, trying discovery process **1020** again, temporarily halting the discovery process **1020**, or being notified when an available output device **220** is found. As an example, the discovery process **1020** may not detect any available output device **220** in the current wired/wireless network. The specified searching criteria (if any) are then saved or registered in the communication manager. When the user enters a new network having available output devices **220**, or when new compatible output devices **220** are added to the current network, or when an output device **220** becomes available for any reason, the communication manager may notify the user of such availability.

In step **1106**, if available output devices **220** are discovered, the communication manager may obtain some basic information, or part of or the entire output device profile, from each discovered output device **220**. Examples of such information may include, but not limited to, device identity, service charge, subscription, service feature, device capability, operating instructions, etc. Such information is preferably provided to the user through the user interface (e.g., display screen, speaker, etc.) of information apparatus **200**.

In step **1108**, the user may select one or more output devices **220** based on information provided, if any, to take the output job. If the user is not satisfied with any of the available output device **220**, the user may decline the service. In this case, the user may be provided with alternatives such as to try again in step **1110** with some changes made to the searching criteria. The user may choose to terminate the service request at any time. In step **1112**, with one or more output devices **220** selected or determined, the communication link between information apparatus **200** and the selected output device or devices **220** may be "locked". Other output devices **220** that are not selected may be dropped. The output process **1020** may then proceed to the client application process of step **1030** of FIG. **10**.

FIG. **12**A is a flow diagram of an exemplary client application process with reference to step **1030** of FIG. **10**. A client application process **1202** for universal output may include or utilize:

- A client application **210** that obtains content (e.g. digital document) intended for output.
- A client application **210** that obtains output device parameters (e.g. rasterization parameters, output job parameters). One example of implementation is to obtain the output device parameters from an output device profile (e.g. printer profile), which includes device dependent parameters. Such profile may be stored in an output controller **230**, output device **220** or information apparatus **200**.
- A client application **210** that may optionally obtain user preferences through (1) user's input (automatic or manual) or selections or (2) based on preset preference or pre-defined defaults or (3) combination of the above.
- A client application **210** that rasterizes at least part of the content intended for output (e.g. a digital document) according to one or more rasterization parameters obtained from previous steps such as through output device profile, user selection, predefined user preferences, predefined default or standard etc.

A client application **210** that generates an intermediate output data containing at least part of the rasterized image related at least partly to the content intended for output.

A client application that transmits the intermediate output data to an output device **220** or output controller **230** for further processing and or final output.

A client application **210** may obtain content (e.g. digital document) **900** or a pointer or reference to the content in many ways. In a preferred embodiment, the client application **210** is in the form of a device driver or an independent application, and the content or its reference can be obtained by the client application **210** from other applications **205** in the same information apparatus **200**. To illustrate an example, a user may first view or download or create a digital document by using a document browsing, viewing and or editing application **205** in his/her information apparatus **200**, and then request output service by launching the client application **210** as a device driver or helper application. The client application **210** communicates with the document browsing or editing application to obtain the digital document or reference to the digital document. As another example, the client application **210** is an independent application and it launches another application to help locate and obtain the digital document for output. In this case, a user may first launch the client application **210**, and then invoke another application **205** (e.g. document editing and or browsing application) residing in the same information apparatus **200** to view or download a digital document. The client application **210** then communicates with the document browsing or editing application to obtain the digital document for output.

In another embodiment, the client application **210** itself provides multiple functionalities or feature sets including the ability for a user to select the content (e.g. digital document) for output. For example, the client application **210** of present invention may provide a GUI where a user can directly input or select the reference or path of a digital document that the user wants to output.

In order to perform rasterization operation on content (e.g. digital document) **900**, the client application **210** in step **1210** needs to obtain device dependent parameters of an output device **220** such as the rasterization parameters. Device dependent parameters may be included in an output device profile. A client application **210** may obtain an output device profile or rasterization parameters in various ways. As an example, an output device profile or rasterization parameters can be obtained with one or combination of the following:

The client application communicates with an output device **220** to upload output device profile or information related to one or more rasterization parameters.

The client application **210** obtains the output device profile from a network node (e.g. server).

A user selects an output device profile stored in the user's information apparatus **200**.

The client application **210** automatically retrieves or uses a default profile, predefined standard values or default values among others.

The client application **210** obtains output device parameters by calculating, which may include approximation, based at least partly on the information it has obtained from one or combination of an output device **220**, a user, default values, and a network node.

It is important to note that step **1210** is an optional step. In some instance, part of or the entire output device profile or related device dependent information may have been already obtained by the client application **210** during the prior optional discovery process (step **1020** in FIG. **10**). In this case, step **1210** may be partially or entirely skipped.

In one implementation, the client application **210** communicates with one or more output devices **220** to upload output device profiles stored in the memory or storage components of those one or more output devices **220** or their associated one or more output controllers **230**. In some instance, the uploaded output device profile may contain partially or entirely references or pointers to device parameters instead of the device parameters themselves. The actual output device parameters may be stored in a network node or in the information apparatus **200**, where they can be retrieved by the client application **210** or by other applications **205** using the references or pointers. It should be noted that a plurality of information apparatuses **200** may request to obtain output device profile or profiles from the same output device **220** at the same time or at least during overlapping periods. The output device **220** or its associated output controller **230** may have components or systems to manage multiple communication links and provide the output device profile or profiles concurrently or in an alternating manner to multiple information apparatuses **200**. Alternatively, an output device **220** may provide components or systems to queue the requests from different information apparatuses **200** and serve them in a sequential fashion according to a scheme such as first come first served, quality of service, etc. Multi-user communication and service management capability with or without queuing or spooling functions may be implemented by, for example, the output controller **230** as optional feature sets.

In another implementation, one or more output device profiles may be stored locally in the information apparatus **200**. The client application **210** may provide a GUI where a user can select a profile from a list of pre-stored profiles. As an example, the GUI may provide the user with a list of output device names (e.g. makes and models), each corresponding to an output device profile stored locally. When the user selects an output device **220**, the client application **210** can then retrieve the output device profile corresponding to the name selected by the user.

In certain cases, during a discovery or communication process described earlier, the client application **210** may have already obtained the output device ID, name, or reference or other information in a variety of ways described previously. In this case, the client application **210** may automatically activate or retrieve an output device profile stored in the information apparatus **200** based on the output device ID, name, or reference obtained without user intervention.

In yet another implementation, the client application **210** may use a set of pre-defined default values stored locally in a user's information apparatus **200**. Such defaults can be stored in one or more files or tables. The client application **210** may access a file or table to obtain these default values. The client application **210** may also create or calculate certain default values based on the information it has obtained during previous steps (e.g. in optional discovery process, based on partial or incomplete printer profile information obtained, etc). A user may or may not have an opportunity to change or overwrite some or all defaults.

Finally, if, for any reason, no device dependent information is available, the client application **210** may use standard output and rasterization parameters or pre-defined default parameters. The above illustrates many examples and varia-

tions of implementation, these and other possible variations in implementation do not depart from the scope of the present invention.

In step **1220**, the client application **210** may optionally obtain user preferences. In one exemplary implementation, the client application **210** may obtain user preferences with a GUI (graphical user interface). For simplicity, a standard GUI form can be presented to the user independent of the make and model of the output device **220** involved in the output process. Through such an interface, the user may specify some device independent output parameters such as page range, number of cards per page, number of copies, etc. Alternatively or in combination, the client application **210** may also incorporate output device-dependent features and preferences into the GUI presented to the user. The device-dependent portion of the GUI may be supported partly or entirely by information contained in the output device profile obtained through components and processes described in previous steps. To illustrate, device dependent features and capabilities may include print quality, color or grayscale, duplex or single sided, output page size among others.

It is preferred that some or all components, attributes or fields of user preferences have default values. Part or all default values may be hard-coded in software program in client application **210** or in hardware components. Alternatively, the client application **210** may also access a file to obtain default values, or it may calculate certain default values based on the information it has obtained during previous steps or components (e.g. from an output device profile). A user may or may not have the ability to pre-configure, or change or overwrite some or all defaults. The client application **210** may obtain and use some or all defaults with or without user intervention or knowledge.

In step **1230**, the client application **210** of present invention performs rasterization operation to conform a content (e.g. a digital document), which may includes objects and information in vector graphics, text, and images, into one or more output images in accordance with the rasterization parameters obtained in previous steps. During rasterization process, text and vector graphics object or information in the content is rasterized or converted into image or bitmap form according to the given set of rasterization parameters. Image information in the content may require scaling and interpolation operations to conform the rasterization parameters. Rasterization process may further include operations such as scaling, interpolation, segmentation, image transformation, image encoding, color space transformation etc. to fit or conform the one or more output images to the given set of rasterization parameters such as target output size, resolution, bit depth, color space and image format etc.

In step **1240**, the client application **210** generates an intermediate output data that includes the rasterized one or more output images. The intermediate output data of the present invention may contain image information, instructions, descriptions, and data such as color profile among others. Creating and generating intermediate output data may further include operations such as compression, encoding, encryption, smoothing, segmentation, scaling and or color correction, among others. The image or images contained in an intermediate output data may be variously encoded and/or implemented with different image formats and/or compression methods (e.g. JPEG, BMP, TIFF, JBIG etc or combination). One preferred implementation is to generate or encode the output image in the intermediate output data with mixed raster content (MRC) description. The use of MRC in the data output process of present invention provides opportunities to improve the compression ratio by applying different compression techniques to segmented elements in the content. In addition, MRC provides opportunities to maintain more original content information during the encoding process of the output image and, therefore, potentially improve output quality.

In step **1250**, the client application **210** transmits intermediate output data to an output device **220** through local communication link **240**. The communication link may be implemented with wired or wireless technologies and the transmission may include one or multiple sessions.

It should be recognized that FIG. **12**A illustrates one example of a client application process **1030** in the data output method **1002** of present invention. Other implementations with more or less steps are possible, and several additional optional processes not shown in FIG. **12** may also be included in the client application process **1030**. Use of these different variations, however, does not result in a departure from the scope of the present invention. As an example, an optional authentication step may be included when the selected output device **220** provides service to a restricted group of users. Various authentication procedures may be added in step **1210** when client application **210** obtains output device profile by communicating with an output device or an output controller. As another example, authentication procedures may also be implemented in step **1250** when the client application transmits intermediate output data to one or more output devices **220** or output controllers **230**. A simple authentication may be implemented by, for example, comparing the identity of an information apparatus **200** with an approved control list of identities stored in the output device **220** or output controller **230**. Other more complex authentication and encryption schemes may also be used. Information such as user name, password, ID number, signatures, security keys (physical or digital), biometrics, fingerprints, voice among others, may be used separately or in combination as authentication means. Such identification and or authentication information may be manually provided by user or automatically detected by the selected output device or devices **220** or output controller **230**. With successful authentication, a user may gain access to all or part of the services provided by the output device **220**. The output device profile that the client application **210** obtains may vary according to the type or quality of service requested or determined. If authentication fails, it is possible that a user may be denied partially or completely access to the service. In this case, the user may be provided with alternatives such as selecting another output device **220** or alternative services.

Another optional process is that a user may be asked to provide payment or deposit or escrow before, during or after output service such as step **1210** or **1250** with reference to FIG. **12**. Examples of payment or deposit may include cash, credit card, bankcard, charge card, smart card, electronic cash, among others. The output controller **220** may provide payment calculation or transaction processing as optional feature sets of present invention.

FIG. **12**B illustrates another exemplary client application output process **1030** with which an information apparatus **200** can pervasively and universally output content to one or more output devices **220** associated with or equipped with an output controller **230** of present invention.

The process illustrated in FIG. **12**B is similar to the process described in FIG. **12**A except that step **1210**, obtaining output device profile, is skipped. In this embodiment, the client application **210** utilizes a set of hard-coded, standard or predefined output device parameters including rasteriza-

tion parameters with which the client application **210** can perform rasterization operation and other required image processing functions. Users may be provided with the option of changing these parameters or inputting alternative parameters. Rasterization parameters include output size, output resolution, bit depth, color space, color channels, scale factors etc. These pre-defined parameters typically comply with a specification or a standard. The same specification and standard may also defined or describe at least partly the intermediate output data. Predefined standard parameters can be stored in a file or profile in an information apparatus **200**, an output controller **230**, and/or in an output device **220** for easy update or upgrade.

In client output process **1204**, since the rasterization parameters are predefined, the client application **210** may not need to upload printer profiles from the selected output device **230**. Consequently, no two-way communication between the information apparatus **200** and the output device or devices **220** is necessary in this process **1204** when compared with process **1202** illustrated in FIG. **12**A. The client application **210** performs rasterization operation **1225** based on standard and/or predefined parameters and generates a rasterized output image with predefined or standard properties of those rasterization parameters. The resulting intermediate output data, which includes at least one rasterized output image, is transmitted from the information apparatus **200** to an output device **220** in step **1250** or to its associated output controller **230** for rendering or output. The intermediate output data generated in process **1202** in general is less device dependent compared to the intermediate output data generated in the process **1202** shown in FIG. **12**A. The output controller **230** included or associated with the output device **220** may be preprogrammed to interpret the raster output image, which includes properties or attributes that correspond to those standard or predefined parameters.

The standard or predefined rasterization parameters may be hard coded or programmed into the client application **210** and/or the output controller **230**. However, instead of hard coding those parameters, one technique to facilitate updates or changes is to store those standard parameters in a default file or profile. The standard or predefined parameters contained in the file or profile can be retrieved and utilized by applications in an information apparatus **200** (e.g. client application **210**) and/or by applications or components in an output device **220** or the output controller **230**. In this way, any necessary updates, upgrades or required changes to those predefined or standard parameters can be easily accomplished by replacing or modifying the file or profile instead of modifying or updating the program, application or components in the information apparatus **200**, output device **220** and/or output controller **230**.

A client application process **1204** providing universal output capability to information apparatus **200** may include or utilize:

- A client application **210** that obtains content (e.g. digital document) intended for output.
- A client application **210** that optionally obtains user preferences (in step **1220**) through (1) user's input (automatic or manual) or selections or (2) based on preset preference or predefined defaults or (3) combination of the above.
- A client application **210** that rasterizes content (in step **1230** or **1225**) according to pre-defined or standard rasterization parameters.
- A client application **210** that generates intermediate output data (in step **1240**) for rendering or output at an output device **220**; the intermediate output data containing at least partially a rasterized image related to the content intended for output.
- A client application **210** that transmits the intermediate output data to an output device **220** (in step **1250**) for further processing and final output.

One advantage of the client output process **1204** of FIG. **12**B compared to the process **1202** illustrated in FIG. **12**A is that the generated intermediate output data is in general less device dependent. The device independent attribute allows the intermediate output data to be more portable and acceptable to more output devices equipped or associated with output controllers. Both data output processes (**1202** and **1204**) enable universal output; allowing a user to install a single client application **210** or components in an information apparatus **200** to provide output capability to more than one output device **220**.

FIG. **13**A illustrates one example of an output device process **1302** and its associated raster imaging method of present invention. In this output device process **1302**, an output device **220** is capable of receiving an intermediate output data from an information apparatus **200**. The output device process **1302** and its operations may include or utilize:

- An output device/system or output controller that receives intermediate output data (in step **1300**). The intermediate output data includes at least partially a raster output image describing at least part of the content for rendering at the output device **220** or system **250**.
- An output device/system or output controller that interprets (in step **1310**) the intermediate output data; in one preferred embodiment, the intermediate output data includes an output image utilizing one or more MRC formats or components.
- An output device/system or output controller that performs image processing operation (in step **1320**) on the raster image. The image processing operation may include but not limited to image decompression, scaling, halftoning, color matching, among others.
- An output device/system or output controller that converts and or generates (in step **1330**) output-engine output data that is in a format or description suitable for input to an output engine (e.g. printer engine in case of a printer) included in an output device **220**.
- An output engine in an output device **220** that renders or generates a final output (e.g. the output-engine output data) in step **1370**.

The output device **220** or output system **250** may include an output controller **230** internally or externally to assist the management and operation of the output process **1302**. As shown in FIG. **7**, there are many possible configurations and implementations of an output controller **230** associated to an output device **220**. Herein and after, output controller **230** is regarded as an integral part of the output device to which it is attached. Hence, the following described output device operations may be partially or completely performed by the output controller associated with it.

In step **1300**, output device process **1302** is initiated by client application **210** transmitting an intermediate output data to output device **220** or output system **250**. In step **1310**, the output device **220** reads and interprets the intermediate output data, containing at least one raster output image relating to the content intended for output. During the reading and interpretation process **1310**, the output device **220** may include components that parse the intermediate output data and perform operations such as decompression,

decoding, and decryption among others. The output image may be variously encoded and may include one or more compression methods.

In the event that the method of image encoding includes MRC format, then, in one example implementation, during decoding and mapping of the output image in step **1310**, the lower resolution layer and information in an image that includes MRC may be mapped, scaled or interpolated to a higher-resolution output image to produce a better image quality. Therefore, step **1310**, in the event that the intermediate output data includes MRC component, each layer in an MRC image can be decompressed, processed, mapped and combined into a single combined output image layer. Step **1310** may also include scaling, color space transformation, and/or interpolation among others. In addition to the possibility of mapping methods using different scaling and interpolation ratio with different layers, another advantage of using MRC is that segmentation information contained in MRC can be utilized to apply different image processing and enhancement techniques to data in different layers of an MRC image in step **1320**.

In step **1320**, the output device **220** may further perform image processing operations on the decoded output image. These image processing operations may include, for example, color correction, color matching, image segmentation, image enhancement, anti-aliasing, image smoothing, digital watermarking, scaling, interpolation, and halftoning among others. The image processing operations **1320** may be combined or operated concurrently with step **1310**. For example, while each row, pixel, or portion of the image is being decoded and or decompressed, image processing operations **1320** is applied. In another implementation, the image processing **1320** may occur after the entire output image or a large portion of the image has been decoded or decompressed.

If the intermediate output data includes MRC component, then in step **1320**, there are additional opportunities to improve image quality. An image encoded in MRC contains segmented information that a traditional single layer image format does not usually have. As an example, foreground can be in one layer, and background in another. As another example, chrominance information may be in one layer and luminance may be in another. This segmented information in MRC may be used to apply different or selective image processing methods and algorithms to different layers or segments to enhance image quality or retain or recover image information. Different image processing techniques or algorithms may include color matching, color correction, black generation, halftoning, scaling, interpolation, anti-aliasing, smoothing, digital watermarking etc. For example, one can apply calorimetric color matching to foreground information and perceptual color matching to background information or vice versa. As another example, error diffusion halftoning can be applied to foreground and stochastic halftoning can be applied to background or vice versa. As yet another example, bi-cubic interpolation can be applied to a layer and bi-linear or minimum distance interpolation can be applied to a different layer.

In step **1330**, the output device **220** or the output controller **230** may convert the processed image (e.g. halftoned) into a form acceptable to the output engine of output device **220**. This conversion step is optional, depending on the type, format and input requirement of a particular output device engine (e.g. printer engine in case of a printer). Different output engines may have different input raster image input requirements. As an example different output engines may require different input image formats, number of bits or bytes per pixel, compression or uncompressed form, or different color spaces (e.g. such as RGB, CMY, CMYK, or any combination of Hi-Fi color such as green, orange, purple, red etc). Incoming raster image data can be encoded in a row, in a column, in multiple rows, in multiple columns, in a chunk, in a segment, or a combination at a time for sending the raster data to the output engine. In some cases, step **1330** may be skipped if the result of step **1320** is already in a form acceptable to the output device engine. In other cases, however, further conversion and or processing may be required to satisfy the specific input requirement of a particular output device engine.

It is important to note that the above described processing from step **1310** to step **1330** may require one or more memory buffers to temporarily store processed results. The memory buffer can store or hold a row, a column, a portion, or a chunk, of the output image in any of the steps described above. Storing and retrieving information into and from the memory buffer may be done sequentially, in an alternating fashion, or in an interlaced or interleaved fashion among other possible combinations. Step **1310** to step **1330** operations can be partially or completely implemented with the output controller **230**.

In step **1370**, the output device engine included in the output device **220** or output system **250** receives the output-engine output data generated in step **1330** or step **1320**. The output-engine output data is in a form that satisfies the input requirements and attributes of the output engine, such as color space, color channel, bit depth, output size, resolution, etc. The output engine then takes this output-engine output data and outputs or renders the data content through its marking engine or display engine.

One advantage of data output method **1002** that includes output device process **1302** is that it has less processing requirements on an information apparatus **200** compared to conventional process with reference to FIG. **1**A, and therefore, enables more information apparatus **200** with relatively lower processing power and memory space to have output capability.

For example, some image processing functions, such as halftoning (e.g. error diffusion) may require substantial processing and computing power. In data output process **1002** that includes output device process **1302**, halftoning is performed in step **1320** by an output device component (e.g. the output controller **230**) included in the output device **220** or the output system **250**, not in the information apparatus **200**; therefore reducing the computational requirements for the information apparatus **200**. Another advantage of data output **1302** is that the intermediate output data is less device dependent than the output data generated by conventional output method **102** with reference to FIG. **1**A. The device independence provides opportunity to allow a single driver or application in an information apparatus **200** to output intermediate output data to a plurality of output devices **220** that include output controllers **230**.

Some output devices **220** may contain a printer controller **410**. An example of this type of output device or printer is a PostScript printer or PCL printer among others. FIG. **13**B illustrates an example of an output device process **1304** with a printer that includes a printer controller **410**. As discussed in FIG. **1**, a printer with a printer controller requires input such as page description language (e.g. PostScript, PCL etc.), markup language (HTML, XML etc), special image format, special graphics format, or a combination, depending on the type of the printer controller.

There are many printing system configurations for providing the data output capability and process to a printer or

a printing system that includes a printer controller. In one example, the existing printer controller in the output device **220** may incorporate the feature sets provided by the output controller to form a "combined controller" as described previously with reference to FIGS. **7**C and **7**F. In another example, the output controller **230** of present invention may be connected sequentially or cascaded to an existing printer controller; the output controller **230** can be internally installed (with reference to FIG. **7**B) or externally connected (with reference to FIG. **7**A) to the output device **220**. For output device **220** that includes a printer controller, the output controller **230** may simply decode the intermediate output data in step **1310** and then convert it into a form acceptable for input to the printer controller in step **1350**.

An output device process **1304** and operations for an output device **220** or system **250** that includes a printer controller **410** may include or utilize:

An output controller **230** or components in an output device **220** or system **250** that receives an intermediate print data or output data (with reference to step **1300**), the intermediate print data includes at least a raster image related at least in part to the content for rendering at the output device **220**.

An output controller **230** or components in an output device **220** or system **250** that interprets the intermediate output data (with reference to step **1310**); in one preferred embodiment, the intermediate output data includes an output image utilizing one or more MRC format or components.

An output controller **230** or components in an output device **220** or system **250** that converts the intermediate output data into a printer-controller print data (with reference to step **1350**); the printer-controller print data includes a format or language (e.g. PDL, PDF, HTML, XML etc.) that is acceptable or compatible to the input requirement of a printer controller.

A printer controller or components in an output device **220** or system **250** that receives a printer controller print data; the printer controller may parse, interpret and further process (e.g. rasterization, scaling, image enhancement, color correction, color matching, halftoning etc.) and convert the printer-controller print data into a printer-engine print data (with reference to step **1360**); the printer-engine print data comprising of a format or description acceptable for input to a printer engine in the output device **220** or the output system **250**.

A printer engine or components in an output device **220** or system **250** that renders or generates a final output (with reference to step **1370**) with the input printer engine print data.

In output device process **1304**, step **1300** (receiving intermediate output data) and step **1310** (interpret intermediate output data) are identical to step **1300** and step **1310** in output device process **1302**, which have been described in previous sections with reference to FIG. **13**A.

In step **1350**, the output controller **230** converts the intermediate print data into a printer-controller print data that is in a form compatible or acceptable for input to a printer controller. For example, a printer controller may require as input a specific page description language (PDL) such as PostScript. The output controller **230** then creates a PostScript file and embeds the output image generated or retrieved in step **1310** into the PostScript file. The output controller **230** can also create and embed the output image from step **1310** into other printer controller print data formats, instructions or languages.

In step **1360**, the printer controller receives printer-controller print data generated in step **1350** that includes an acceptable input language or format to the printer controller. The printer controller may parse, interpret, and decode the input printer-controller print data. The printer controller may further perform raster image processing operations such as rasterization, color correction, black generation, GCR, anti-aliasing, scaling, image enhancement, and halftoning among others on the output image. The printer controller may then generate a printer-engine print data that is suitable for input to the printer engine. The type and or format of printer-engine print data may vary according to the requirement of a particular printer engine.

It is important to note that the above described process from step **1310** to step **1360** may require one or more memory buffer to temporarily store processed results. The memory buffer can store or hold a row, a column, a portion, or a chunk, of the output image in any of the steps described above. Storing and retrieving information into and from the memory buffer may be done sequentially, alternated, or in an interlaced or interleaved fashion among other possible combinations. Process and operations of step **1310** to step **1360** can be implemented with output controller **230**.

In step **1370**, the printer engine included in the output device **220** or output system **250** generates or renders the final output based on the printer-engine print data generated in step **1360**. For example, the printer-engine print data may be in CMY, CMYK, and RGB etc, and this may be in one or more bits per pixel format, satisfying the size and resolution requirement of the printer engine. The printer engine included the output device **220** may take this print data and generate or render an output page through its marking engine.

Having described and illustrated the principles of our invention with reference to an illustrated embodiment, it will be recognized that the illustrated embodiment can be modified in arrangement and detail without departing from such principles. In view of the many possible embodiments to which the principles of our invention may be applied, it should be recognized that the detailed embodiments are illustrative only and should not be taken as limiting the scope of our invention. Rather, I claim as my invention all such embodiments as may come within the scope of the following claims and equivalents thereto.

Unless the context indicates otherwise, a reference in a claim to the number of instances of an element, be it a reference to one instance or more than one instance, requires at least the stated number of instances of the element but is not intended to exclude from the scope of the claim a structure or method having more instances of that element than stated. Specifically, but without limitation, a reference in a claim to an or one output device or system, to an or one image, or to a or one rasterization parameter is not intended to exclude from the scope of the claim a structure or method having, including, employing or supplying two or more output devices or system, images or rasterization parameters.

What is claimed is:

1. A non-transitory computer readable storage medium having recorded therein software that is executable at a mobile information apparatus to wirelessly set up an output system for providing output service to the mobile information apparatus, the output system includes wireless communication circuitry for wireless communication, and the output system is associated with at least an output device for output of digital content, and the output system is a separate

device from the mobile information apparatus, the mobile information apparatus comprises:

a touch sensitive screen interface for interacting with a user,

memory for storing at least part of the software,

one or more processors, and

one or more wireless communication units that include one or more radio frequency link controllers for wireless communication; and

wherein, when the one or more processors included in the mobile information apparatus execute at least part of the software at the mobile information apparatus, the mobile information apparatus:

(1) wirelessly discovers, using the one or more wireless communication units of the mobile information apparatus, the output system, the wireless discovery of the output system is based, at least in part, on physical proximity between the mobile information apparatus and the output system;

(2) displays, on the touch sensitive screen interface of the mobile information apparatus, a user interface item or icon related to the output system wirelessly discovered in (1) for user selection;

(3) obtains, using the touch sensitive screen interface of the mobile information apparatus and from the user, at least an indication of a selection of the user interface item or icon, related to the output system wirelessly discovered in (1) and displayed on the touch sensitive screen interface in (2);

(4) wirelessly provides, using the one or more wireless communication units of the mobile information apparatus, security information or authentication information, from the mobile information apparatus to the output system that is wirelessly discovered in (1) and selected in (3), the security information or the authentication information is to facilitate, at least in part, the mobile information apparatus to access services provided by the output system.

(5) wirelessly establishes, using the one or more wireless communication units of the mobile information apparatus, a wireless communication link between the mobile information apparatus and the output system that is wirelessly discovered in (1), the wireless communication link being a direct short range wireless communication link or a wireless local area network communication link, and the wireless establishing of the wireless communication link is based, at least in part, on the mobile information apparatus having obtained the indication of the selection of the user interface item or icon in (3); and

wherein the mobile information apparatus wirelessly accesses the services, which is provided by the output system, over the wireless communication link wirelessly established in (5), based on having wirelessly provided the security information or the authentication information from the mobile information apparatus to the output system in (4).

2. The medium according to claim **1**, wherein the one or more wireless communication units of the mobile information apparatus support at least part of a protocol within Bluetooth specifications, and the wireless communication link between the mobile information apparatus and the output system wirelessly established in (5), using the one or more wireless communication units, is compatible with the at least part of a protocol within Bluetooth specifications.

3. The medium according to claim **2**, wherein the one or more wireless communication units of the mobile information apparatus further support at least part of a protocol within IEEE 802.11 standards for direct wireless communication or for wireless local area network communication.

4. The medium according to claim **1**, wherein the mobile information apparatus further synchronizes or exchanges information with the output system wirelessly discovered in (1).

5. The medium according to claim **2**, wherein the mobile information apparatus is embodied as a smart phone or an information pad, and the output system includes at least one audio output device for outputting audio digital content, and wherein, subsequent to the mobile information apparatus having wirelessly provided the security information or the authentication information to the output system in (4), the mobile information apparatus is operable to access the services, provided by the output system, which include outputting, at the output system, audio digital content wirelessly received from the mobile information apparatus via the wireless communication link wirelessly established in (5).

6. The medium according to claim **3**, wherein the mobile information apparatus is embodied as a smart phone, and wherein the output system is at least one of a sound output system, a television system, an output controller connectable to a television, a projection system, a printing system, or an information apparatus that is at least an Internet appliance, individually or in any combination; and

wherein subsequent to having wirelessly provided, using the one or more wireless communication units of the mobile information apparatus, the security information or the authentication information to the output system in (4), the mobile information apparatus further executes at least part of the software at the mobile information apparatus using the one or more processors to:

(i) obtain, via the touch sensitive screen interface at the mobile information apparatus, the digital content for outputting at the output system; and

(ii) wirelessly transmit, using the one or more wireless communication units of the mobile information apparatus and over the wireless communication link wirelessly established in (5), output data, related to the digital content obtained in (i), to the output system for processing or outputting at least part of the digital content at the output system; and wherein the wireless communication link wirelessly established in (5), using the one or more wireless communication units of the mobile information apparatus, is compatible with at least a protocol within IEEE 802.11standards.

7. The medium according to claim **2**, wherein the mobile information apparatus is embodied as a smart phone, and wherein, subsequent to wirelessly establishing the the wireless communication link between the mobile information apparatus and the output system in (5), the mobile information apparatus further wirelessly manages or wirelessly drives the output system using the one or more wireless communication units of the mobile information apparatus and via the wireless communication link in (5).

8. A non-transitory computer readable storage medium having recorded therein software that is executable at a mobile device for wirelessly managing an output system, the output system includes wireless communication circuitry for wireless communication and at least a connection to an output device for outputting digital content, the mobile device is a separate device from the output system, the mobile device includes:

a touch sensitive screen interface for interacting with a user,

memory for storing at least part of the software,

one or more processors, and

one or more wireless communication units that include circuitry for wireless communication; and

wherein, when the one or more processors, included in the mobile device execute at least part of the software at the mobile device, the mobile device executes a method, comprising:

(1) wirelessly discovering, by the mobile device and using the one or more wireless communication units of the mobile device, the output system, the wireless discovering of the output system is based, at least in part, on short range wireless communication or wireless local area network communication;

(2) wirelessly receiving, by the mobile device and using the one or more wireless communication units of the mobile device, device information from the output system that has been wirelessly discovered by the mobile device in (1), the device information is related, at least in part, to the output system wirelessly discovered in (1);

(3) displaying, on the touch sensitive screen interface of the mobile device, a user interface item for user selection, the user interface item is related, at least in part, to the device information wirelessly received from the output system in (2);

(4) receiving, by the mobile device and using the touch sensitive screen interface of the mobile device and from the user, at least an indication of a selection of the user interface item displayed on the touch sensitive screen interface in (3), the user interface item is related, at least in part, to the output system discovered in (1);

(5) wirelessly providing, from the mobile device to the output system that is wirelessly discovered in (1) and selected in (4), using the one or more wireless communication units of the mobile device, security information or authentication information, the wireless providing of the security information or the authentication information facilitates, at least in part, the mobile device to access output services provided by the output system; and

(6) wirelessly establishing, using the one or more wireless communication units of the mobile device, a wireless communication link between the mobile device and the output system that is wirelessly discovered in (1), the wireless communication link is a short range wireless communication link or a wireless local area network communication link, and the wireless establishing of the wireless communication link is subsequent to the mobile device having received the indication of the selection of the user interface item in (4).

9. The medium according to claim **8**, wherein the wireless discovering of the output system in (1) is based, at least in part, on physical proximity between the mobile device and the output system, and wherein, subsequent to the mobile device having wirelessly provided the security information or the authentication information to the output system in (5), the mobile device wirelessly accesses the output services provided by the output system over the wireless communication link wirelessly established in (6).

10. The medium according to claim **9**, wherein the one or more wireless communication units of the mobile device support at least part of a protocol within IEEE 802.11 standards or within Bluetooth specifications, and the wireless communication link wirelessly established in (6) is compatible, with the at least part of a protocol within IEEE 802.11 standards or within Bluetooth specifications.

11. The medium according to claim **10**, wherein, subsequent to the mobile device having wirelessly provided the security information or the authentication information to the output system in (5), the method further comprises:

(a) wirelessly establishing, using the one or more wireless communication units of the mobile device, a wireless local area network connection between the mobile device and the output system; and

(b) wirelessly transmitting, using the one or more wireless communication units of the mobile device and over the wireless local area network connection wirelessly established in (a), output data that is related to the digital content, from the mobile device to the output system for outputting at least part of the digital content at the output system.

12. The medium according to claim **11**, wherein the mobile device is at least a smart phone, and wherein the security information or the authentication information includes one or more of a name, a password, identification information, an ID number, a PIN, an IP address, a security key, biometric information, fingerprint information, or voice, individually or in any combination.

13. The medium according to claim **11**, wherein the mobile device is at least a smart phone or an information pad, and wherein the output system is at least one of a sound output system, a television system, a controller system connectable to a television, or a projector system, individually or in any combination, for outputting the digital content that includes audio data or video data, individually or in combination.

14. A non-transitory computer readable storage medium having recorded therein software that is executable at a mobile information apparatus to wirelessly manage or wirelessly drive an output device, the output device includes wireless communication circuitry for wireless communication with the mobile information apparatus, and the output device is a seperate device from the mobile information apparatus, the mobile information apparatus comprises:

a touch sensitive screen interface for interacting with a user,

memory for storing at least part of the software,

one or more processors, and

one or more wireless communication units that include one or more radio frequency link controllers for wireless communication; and

wherein, when the one or more processors execute at least part of the software, the mobile information apparatus:

(1) wirelessly discovers, using the one or more wireless communication units of the mobile information apparatus, the output device, the wireless discovery of the output device is based, at least in part, on physical proximity between the mobile information apparatus and the output device;

(2) displays, on the touch sensitive screen interface of the mobile information apparatus, a user interface item related, at least in part, to the output device wirelessly discovered in (1);

(3) wirelessly establishes, using the one or more wireless communication units of the mobile information apparatus, a wireless communication link between the mobile information apparatus and the output device wirelessly discovered in (1), the wireless communication link is a direct short range wireless communication link or a wireless local area network communication link; and

(4) wirelessly manages or wirelessly drives, using the one or more wireless communication units of the mobile information apparatus and via the wireless communication link wirelessly established in (3), the output device,

wherein the wireless managing or the wireless driving of the output device in (4) further comprises:

(5) wirelessly sending, using the one or more wireless communication units of the mobile information apparatus and via the established wireless communication link wirelessly established in (3), first information or a query, from the mobile information apparatus to the output device; and

(6) wirelessly receiving, by the mobile information apparatus, using the one or more wireless communication units of the mobile information apparatus and via the established wireless communication link wirelessly established in (3), second information or a response from the output device, the second information or the response wirelessly received from the output device is in response to the mobile information apparatus having wirelessly sent the first information or the query to the output device in (5).

15. The medium according to claim **14**, wherein the one or more wireless communication units of the mobile information apparatus support at least part of a protocol within IEEE 802.11 standards, and the wireless communication link wirelessly established in (3) is compatible with at least part of a protocol within IEEE 802.11 standards for direct wireless communication or for wireless local area network communication.

16. The medium according to claim **14**, wherein the one or more wireless communication units of the mobile information apparatus support at least part of a protocol within Bluetooth specifications, and the wireless communication link wirelessly established in (3) is compatible with at least part of a protocol within Bluetooth specifications.

17. The medium according to claim **16**, wherein subsequent to the wireless discovery of the output device in (1), the mobile information apparatus further wirelessly receives, using the one or more wireless communication units of the mobile information apparatus, device information from the output device, the device information includes an attribute related, at least in part, to the output device wirelessly discovered in (1), and wherein the user interface item, displayed on the touch sensitive screen interface in (2), is related to the device information wirelessly received from the output device.

18. The medium according to claim **14**, wherein, when the one or more processors execute at least part of the software, the mobile information apparatus further obtains, via the touch sensitive screen interface of the mobile information apparatus and from the user, at least an indication of the user interface item displayed on the touch sensitive screen interface in (2); and subsequent to obtaining the indication of the selection via the touch sensitive screen interface of the mobile information apparatus, the mobile information apparatus wirelessly establishes the wireless communication link in (3).

19. The medium according to claim **15**, wherein the mobile information apparatus is at least a smart phone or an information pad, and wherein the output device is at least one of a sound output device, a television device, a controller device connectable to a television, a projector device, or an Internet appliance, individually or in any combination; and wherein the software is either pre-installed, at least partly, at the mobile information apparatus or downloadable, at least partly, to the mobile information apparatus from the one or more servers accessible by the mobile information apparatus over a network.

20. The medium according to claim **14**, wherein, when the one or more processors execute at least part of the software, the mobile information apparatus further wirelessly provides, using the one or more wireless communication units of the mobile information apparatus, security information or authentication information to the output device, the security information or the authentication information includes one or more of a name, a password, identification information, an ID number, a PIN, an IP address, a security key, biometric information, a fingerprint, or voice, individually or in any combination; and based, at least in part, on having successfully provided the security information or the authentication information to the output device, the mobile information apparatus is operable to access services provided by the output device.

21. A mobile information apparatus for wirelessly managing an output system, where the output system includes wireless communication circuitry for wireless communication with the mobile information apparatus and at least a connection to an output device for output of digital content, and the output system is a distinct and separate device from the mobile information apparatus, and wherein the mobile information apparatus comprises:

one or more processors,

software or software application running at the mobile information apparatus,

a touch sensitive screen interface for interacting with a user,

memory for storing at least part of the software or the software application, and

one or more wireless communication units that include one or more radio frequency link controllers for wireless communication, and wherein the mobile information apparatus, using the software or the software application, is configured for wirelessly managing the output system, which comprises:

(1) wirelessly discovering, using the one or more wireless communication units of the mobile information apparatus, the output system, the wireless discovery of the output system is based, at least in part, on physical proximity between the mobile information apparatus and the output system;

(2) wirelessly receiving, by the mobile information apparatus and using the one or more wireless communication units of the mobile information apparatus, device information from the output system that has been wirelessly discovered by the mobile information apparatus in (1), the device information is related, at least in part, to the output system wirelessly discovered in (1);

(3) displaying, on the touch sensitive screen interface of the mobile information apparatus, a user interface item for user selection, the user interface item is related, at least in part, to the device information wirelessly received from the output system in (2);

(4) wirelessly establishing, using the one or more wireless communication units of the mobile information apparatus, a wireless communication link between the mobile information apparatus and the output system that is wirelessly discovered in (1), the wireless communication link is a short range wireless communication link or a wireless local area network communication link;

(5) wirelessly sending from the mobile information apparatus, using the one or more wireless communication

units of the mobile information apparatus and via the wireless communication link wirelessly established in (4), first information or a query to the output system; and

(6) wirelessly receiving, by the mobile information apparatus, using the one or more wireless communication units of the mobile information apparatus and via the wireless communication link wirelessly established in (4), second information or a response, from the output system, the second information or the response wirelessly received from the output system is in response to the mobile information apparatus having wirelessly sent the first information or the query to the output system in (5).

22. The mobile information apparatus of claim **21**, wherein the one or more wireless communication units of the mobile information apparatus support at least part of a protocol within IEEE 802.11 standards or at least part of a protocol within Bluetooth specifications; and wherein the wireless communication link wirelessly established in (4) is compatible with at least part of the protocol within IEEE 802.11 standards, or at least part of the protocol within Bluetooth specifications.

23. The mobile information apparatus of claim **22**, wherein the mobile information apparatus, using the software or the software application, is further configured for wirelessly providing, using the one or more wireless communication units of the mobile information apparatus, security information or authentication information to the output system, and wherein based, at least in part, on the mobile information apparatus having successfully provided the security information or the authentication information to the output system, the mobile information apparatus is operable to aaccess output services provided by the output system; and wherein the security information or the authentication information includes one or more of a name, a password, identification information, an ID number, a PIN, an IP address, a security key, biometric information, fingerprint information, or voice, individually or in any combination.

24. The mobile information apparatus of claim **22**, wherein subsequent to displaying, on the touch sensitive screen interface of the mobile information apparatus, the user interface item for the user selection in (3), the mobile information apparatus, using the software or the software application, is further configured for:

receiving, using the touch sensitive screen interface of the mobile information apparatus and from the user, at least an indication of a selection of the user interface item displayed on the touch sensitive screen interface in (3); and

subsequent to receiving the indication of the selection using the touch sensitive screen interface of the mobile information apparatus and from the user, the mobile information apparatus wirelessly establishes the wireless communication link in (4).

25. The mobile information apparatus of claim **22**, wherein the mobile information apparatus is embodied as a smart phone or as an information pad, and wherein the output system is embodied, at least in part, as a television or an output controller that is wire connectable to a television; and wherein the mobile information apparatus, using the software or the software application, is further configured for:

(a) obtaining, by the software application running a the mobile information apparatus, audio or video digital content;

(b) wirelessly transmitting, using the one or more wireless communication units of the mobile information apparatus and over the wireless communication link wirelessly established in (4), and from the mobile information apparatus to the output system, output data related to the audio or video digital content obtained by the software application in (a); and

(c) outputting, at the output device included in or connected to the output system, at least part of the audio or video digital content that is related, at least in part, to the output data wirelessly transmitted in (b) and that is obtained by the software application in (a).

26. The mobile information apparatus of claim **21**, wherein the second information includes information that is related to at least one of the following: status information, response information related to the first information, device attribute information, or user interface information, individually or in any combination.

27. The mobile information apparatus of claim **21**, using the software or the software application, is further configured for:

(7) wirelessly sending, from the mobile information apparatus, using the one or more wireless communication units of the mobile information apparatus, and over the wireless communication link wirelessly established in (4), voice data to the output system, the voice data is related, at least in part, to a voice activated command from the user operating the mobile information apparatus.

28. A mobile information apparatus for wirelessly managing an output device and to access output services provided by the output device, the output device includes wireless communication circuitry for wireless communication with the mobile information apparatus, the mobile information apparatus is a separate device from the output device, and the mobile information apparatus comprises:

one or more processors,

software executing at the mobile information apparatus,

a touch sensitive screen interface for interacting with a user,

memory for storing at least part of the software, and

one or more wireless communication units that include one or more radio frequency link controllers for wireless communication, and

wherein the mobile information apparatus is configurable for:

(1) wirelessly discovering, using the one or more wireless communication units of the mobile information apparatus, the output device, the wireless discovering of the output device is based, at least in part, on short range wireless communication or wireless local area network communication;

(2) wirelessly receiving, using the one or more wireless communication units of the mobile information apparatus, device information from the output device that is wirelessly discovered by the mobile information apparatus in (1), the device information is associated, at least in part, with the output device that is wirelessly discovered in (1);

(3) receiving, from the user and using the touch sensitive screen interface of the mobile information apparatus, at least an indication of a selection of a user interface item or icon displayed on the touch sensitive screen interface, the user interface item or icon is related to the device information, wirelessly received in (2) from the output device that is wirelessly discovered in (1),

(4) wirelessly establishing, using the one or more wireless communication units of the mobile information apparatus, a wireless communication link between the mobile information apparatus and the output device that is wirelessly discovered in (1), the wireless communication link being a direct short range wireless communication link or a wireless local area network communication link, and the wireless establishing of the wireless communication link is based, at least in part, on the mobile information apparatus having received the indication of the selection of the user interface item or icon in (3);

(5) wirelessly providing, to the output device, using the one or more wireless communication units of the mobile information apparatus and over short range wireless communication, security information or authentication information from the mobile information apparatus, the wireless providing of the security information or the authentication information, from the mobile information apparatus to the output device, facilitates, at least in part, the mobile information apparatus to access services provided by the output device, and

(6) wherein, based on the mobile information apparatus having wirelessly provided the security information or the authentication information to the output device in (5), the mobile information apparatus wirelessly accesses the output services provided by the output device, over the wireless communication link wirelessly established in (4).

29. The mobile information apparatus of claim **28**, wherein the one or more wireless communication units include one or more chips or chipsets, and wherein the wireless communication link wirelessly established in (4) is compatible, at least partly, with at least one of the following, individually or in any combination:

(a) at least part of a protocol within IEEE 802.11 standards, or

(b) at least part of a protocol within Bluetooth specifications.

30. The mobile information apparatus of claim **29**, wherein prior to receiving the indication of the selection of the user interface item or icon in (3), the mobile information apparatus is further configurable for displaying, on the touch sensitive screen interface of the mobile information apparatus, the user interface item or icon for user selection, the user interface item or icon is related, at least in part, to the device information wirelessly received from the output device in (2); and wherein the mobile information apparatus is further configurable for:

(i) obtaining, by the mobile information apparatus, digital content for output; and

(ii) wirelessly transmitting, using the one or more wireless communication units of the mobile information apparatus and over the wireless communication link established in (4), output data related to the digital content obtained in (i), from the mobile information apparatus to the output device for processing or outputting at least part of the digital content at the output system.

31. The mobile information apparatus of claim **30**, wherein the mobile information apparatus is at least a smart phone or an information pad, and wherein the output device is at least one of a sound output device, a television device, a controller device connectable to a television, or a projector device, individually or in any combination; and wherein the output data includes at least audio data or video data individually or in combination.

32. The mobile information apparatus of claim **29**, wherein the wireless discovering of the output device in (1) is based, at least in part, on physical proximity between the mobile information apparatus and the output device; and wherein the security information or the authentication information includes one or more of a name, a password, identification information, an ID number, a PIN, an IP address, a security key, a biometric ID, a fingerprint, or a voice ID, individually or in any combination.

33. The mobile information apparatus of claim **29**, wherein the mobile information apparatus is further configurable to synchronize or exchange information with the output device, that is wirelessly discovered in (1), over the wireless communication link established in (4); and wherein the mobile information apparatus is further configurable to:

(a) wirelessly send, using the one or more wireless communication units of the mobile information apparatus and via the wireless communication link wirelessly established in (4), first information or a query to the output device; and

(b) wirelessly receive, using the one or more wireless communication units of the mobile information apparatus and via the wireless communication link wirelessly established in (4), second information or a response from the output device, the second information or the response wirelessly received from the output device is in response to the mobile information apparatus having wirelessly sent the first information or the query to the output device in (a).

34. A method for wirelessly managing an output system using a mobile information apparatus, wherein the output system includes wireless communication circuitry for wireless communication with the mobile information apparatus and at least a connection to an output device for output of digital content, and the output system is a distinct and separate device from the mobile information apparatus, and wherein the mobile information apparatus includes:

one or more processors,

software or software application running at the mobile information apparatus,

a touch sensitive screen interface for interacting with a user,

memory for storing at least part of the software or the software application, and

one or more wireless communication units that include one or more radio frequency link controllers for wireless communication, and wherein the method comprises:

(1) wirelessly discovering, by the mobile information apparatus, the output system using the one or more wireless communication units of the mobile information apparatus, the wireless discovery of the output system is based, at least in part, on physical proximity between the mobile information apparatus and the output system;

(2) wirelessly receiving, by the mobile information apparatus and using the one or more wireless communication units of the mobile information apparatus, device information from the output system that is wirelessly discovered by the mobile information apparatus in (1), the device information is related, at least in part, to the output system wirelessly discovered in (1);

(3) displaying, on the touch sensitive screen interface of the mobile information apparatus, a user interface item or icon related to the device information wirelessly received from the output system in (2) for user selection;

(4) wirelessly establishing, using the one or more wireless communication units of the mobile information apparatus and subsequent to wirelessly receiving the device information in (2), a wireless communication link between the mobile information apparatus and the output system that is wirelessly discovered in (1), the wireless communication link is a short range wireless communication link or a wireless local area network communication link;

(5) wirelessly sending, from the mobile information apparatus, using the one or more wireless communication units of the mobile information apparatus and via the wireless communication link wirelessly established in (4), first information or a query to the output system;

(6) wirelessly receiving, by the mobile information apparatus, using the one or more wireless communication units of the mobile information apparatus and via the wireless communication link wirelessly established in (4), second information or a response, from the output system, the second information or the response wirelessly received from the output system is in response to the mobile information apparatus having wirelessly sent the first information or the query to the output system in (5); and

(7) repeating any combination of steps or operations in (5) and in (6), by the mobile information apparatus, for the mobile information apparatus to wirelessly manage or wirelessly drive the output system without a need to repeat at least steps or operations in (1)—(4).

35. The method of claim **34**, wherein the one or more wireless communication units of the mobile information apparatus support at least part of a protocol within IEEE 802.11 standards or at least part of a protocol within Bluetooth specifications; and wherein the wireless communication link wirelessly established in (4) is compatible with at least part of the protocol within IEEE 802.11 standards or with at least part of the protocol within Bluetooth specifications.

36. The method of claim **34**, wherein, subsequent to displaying, on the touch sensitive screen interface of the mobile information apparatus, the user interface item or icon in (3) for the user selection, and wherein the method further comprises:

receiving, using the touch sensitive screen interface of the mobile information apparatus and from the user, at least an indication of a selection of the user interface item or icon displayed on the touch sensitive screen interface in (3); and

subsequent to receiving the indication of the selection using the touch sensitive screen interface of the mobile information apparatus and from the user, the mobile information apparatus wirelessly establishes the wireless communication link in (4).

37. The method of claim **35**, wherein the mobile information apparatus is embodied as a smart phone or as an information pad, and wherein the output system is embodied, at least in part, as a television or an output controller that is wire connectable to a television; and wherein the method further comprises:

(a) obtaining, by the software application running at the mobile information apparatus, audio or video digital content;

(b) wirelessly transmitting, using the one or more wireless communication units of the mobile information apparatus, over the wireless communication link wirelessly established in (4) and from the mobile information apparatus to the output system, output data related to the audio or video digital content that is obtained by the software application in (a); and

(c) outputting, at the output device included in or connected to the output system, at least part of the audio or video digital content that is related, at least in part, to the output data wirelessly transmitted in (b) and that is obtained by the software application in (a).

38. The method of claim **34**, wherein the method further comprises:

wirelessly sending, from the mobile information apparatus, using the one or more wireless communication units of the mobile information apparatus, over the wireless communication link wirelessly established in (4), and to the output system, voice data that is related, at least in part, to a voice activated command from the user operating the mobile information apparatus.

39. The method according to claim **34**, wherein the method further comprises:

wirelessly synchronizing, by the mobile information apparatus, software or data between the mobile information apparatus and the output system over the wireless communication link wirelessly established in (4); and

wherein the second information includes information that is related to at least one of status information, response information related to the first information, device attribute information, or user interface information, individually or in any combination.

* * * * *