US010893876B2

(12) **United States Patent**
**Uthgenannt et al.**

(10) **Patent No.: US 10,893,876 B2**
(45) **Date of Patent: *Jan. 19, 2021**

(54) **METHOD AND APPARATUS FOR MANUFACTURING AN IMPLANT**

(71) Applicant: **Biomet Manufacturing, LLC**, Warsaw, IN (US)

(72) Inventors: **Brian A. Uthgenannt**, Cricklade (GB); **Robert Metzger**, Wakarusa, IN (US); **Nathan Emick Belcher**, Ferguson, MO (US); **Joshua B. Catanzarite**, Warsaw, IN (US)

(73) Assignee: **Biomet Manufacturing, LLC**, Warsaw, IN (US)

( * ) Notice: Subject to any disclaimer, the term of this patent is extended or adjusted under 35 U.S.C. 154(b) by 114 days.

This patent is subject to a terminal disclaimer.

(21) Appl. No.: **16/183,457**

(22) Filed: **Nov. 7, 2018**

(65) **Prior Publication Data**

US 2019/0069909 A1 Mar. 7, 2019

**Related U.S. Application Data**

(60) Continuation of application No. 14/739,160, filed on Jun. 15, 2015, now Pat. No. 10,159,498, which is a (Continued)

(51) **Int. Cl.**
***A61B 17/16*** (2006.01)
***A61F 2/38*** (2006.01)
(Continued)

(52) **U.S. Cl.**
CPC ..... ***A61B 17/1675*** (2013.01); ***A61B 17/1764*** (2013.01); ***A61B 90/96*** (2016.02);
(Continued)

(58) **Field of Classification Search**
CPC . A61B 17/1675; A61B 17/1617; A61B 90/96; A61F 2/38
See application file for complete search history.

(56) **References Cited**

U.S. PATENT DOCUMENTS

1,480,285 A 1/1924 Moore
1,763,730 A 6/1930 Lackum
(Continued)

FOREIGN PATENT DOCUMENTS

CA 2447694 A1 12/2002
CA 2501041 A1 4/2004
(Continued)

OTHER PUBLICATIONS

US 10,070,875 B2, 09/2018, Meridew et al. (withdrawn)
(Continued)

*Primary Examiner* — Jason-Dennis N Stewart
(74) *Attorney, Agent, or Firm* — Schwegman Lundberg & Woessner, P.A.

(57) **ABSTRACT**

An orthopedic device includes a femoral implant having a non-custom internal bone engagement surface. The femoral implant includes at least nine parameters adjusted preoperatively to correspond to a specific patient. The parameters can include patient-specific lengths, such as, for example, medial and lateral condyle widths and notch height, and patient-specific medial and lateral angles.

**19 Claims, 17 Drawing Sheets**

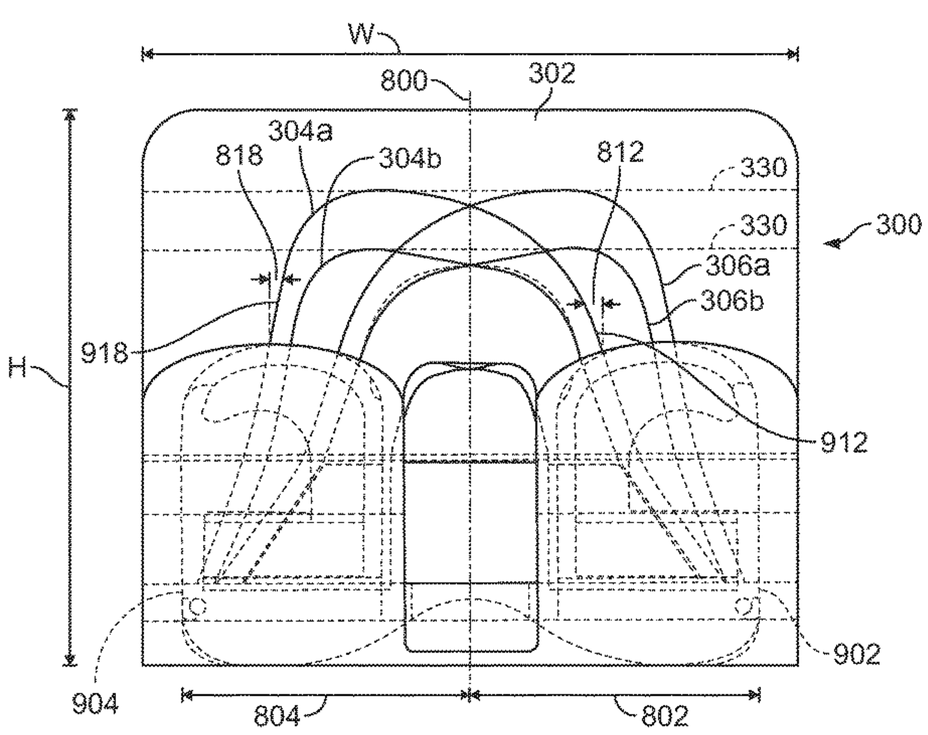


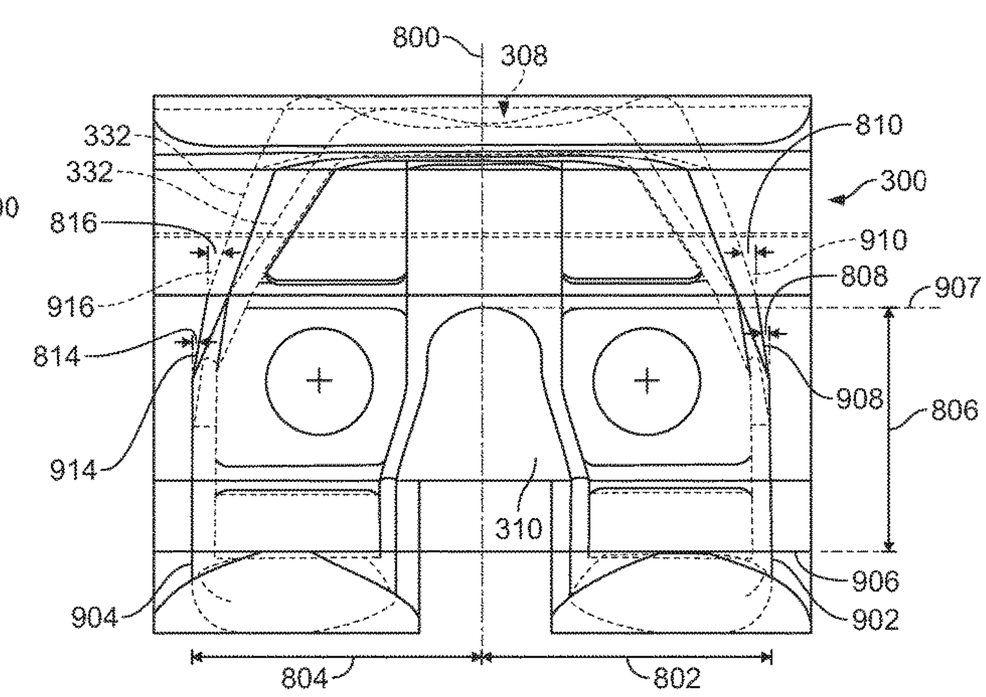

**Related U.S. Application Data**

continuation of application No. 13/766,419, filed on Feb. 13, 2013, now abandoned, which is a division of application No. 12/872,663, filed on Aug. 31, 2010, now Pat. No. 8,407,067.

(60) Provisional application No. 61/310,752, filed on Mar. 5, 2010.

(51) **Int. Cl.**

| | |
|---|---|
| ***A61B 17/17*** | (2006.01) |
| ***B33Y 80/00*** | (2015.01) |
| ***B33Y 50/00*** | (2015.01) |
| ***A61F 2/30*** | (2006.01) |
| ***A61B 90/96*** | (2016.01) |
| ***A61B 90/98*** | (2016.01) |
| ***G16H 50/50*** | (2018.01) |
| ***G06F 19/00*** | (2018.01) |
| *A61B 17/15* | (2006.01) |
| *A61B 17/00* | (2006.01) |
| *A61F 2/46* | (2006.01) |
| *A61B 34/10* | (2016.01) |

(52) **U.S. Cl.**

CPC ..... ***A61B 90/98*** (2016.02); ***A61F 2/30942*** (2013.01); ***A61F 2/38*** (2013.01); ***A61F 2/3859*** (2013.01); ***B33Y 50/00*** (2014.12); ***B33Y 80/00*** (2014.12); ***G06F 19/00*** (2013.01); ***G16H 50/50*** (2018.01); *A61B 17/155* (2013.01); *A61B 34/10* (2016.02); *A61B 2017/00526* (2013.01); *A61F 2002/3071* (2013.01); *A61F 2002/3096* (2013.01); *A61F 2002/30616* (2013.01); *A61F 2002/30617* (2013.01); *A61F 2002/30708* (2013.01); *A61F 2002/30884* (2013.01); *A61F 2002/30948* (2013.01); *A61F 2002/30952* (2013.01); *A61F 2002/30953* (2013.01); *A61F 2002/30962* (2013.01); *A61F 2002/3863* (2013.01); *A61F 2002/4633* (2013.01); *A61F 2250/0084* (2013.01); *A61F 2250/0085* (2013.01); *A61F 2250/0097* (2013.01); *Y10T 29/49* (2015.01)

(56) **References Cited**

U.S. PATENT DOCUMENTS

1,959,615 A 5/1934 Derrah
2,407,845 A 11/1939 Siebrandt
2,416,228 A 2/1947 Sheppard
2,433,815 A 12/1947 Nicephore
2,455,655 A 12/1948 Carroll
2,618,913 A 11/1952 Plancon et al.
2,702,550 A 2/1955 Rowe
2,724,326 A 11/1955 Long
2,910,978 A 11/1959 Urist
2,955,530 A 10/1960 Nilo
3,048,522 A 8/1962 Velley
3,229,006 A 1/1966 Egon
3,229,372 A 1/1966 Quashnock et al.
3,330,611 A 7/1967 Heifetz
3,514,791 A 6/1970 Sparks
3,554,197 A 1/1971 Dobbie
3,624,747 A 11/1971 Mcknight et al.
3,631,596 A 1/1972 Glaus
3,678,934 A 7/1972 Warfield et al.
3,698,017 A 10/1972 Scales et al.
3,703,036 A 11/1972 Karubian
3,774,244 A 11/1973 Walker
3,783,873 A 1/1974 Jacobs
3,807,393 A 4/1974 McDonald
3,811,449 A 5/1974 Gravlee et al.
3,840,904 A 10/1974 Tronzo
3,869,731 A 3/1975 Waugh et al.
3,903,549 A 9/1975 Deyerle
3,905,105 A 9/1975 Tuke
3,905,374 A 9/1975 Winter
3,911,923 A 10/1975 Yoon
3,913,585 A 10/1975 Wolvek
3,920,022 A 11/1975 Pastor
3,941,127 A 3/1976 Froning
3,967,625 A 7/1976 Yoon et al.
3,975,858 A 8/1976 Much
3,989,049 A 11/1976 Yoon
3,991,426 A 11/1976 Flom et al.
3,994,287 A 11/1976 Turp et al.
4,053,953 A 10/1977 Flom et al.
4,055,862 A 11/1977 Farling
4,081,866 A 4/1978 Upshaw et al.
4,085,466 A 4/1978 Goodfellow et al.
4,085,743 A 4/1978 Yoon
4,103,680 A 8/1978 Yoon
4,223,445 A 9/1980 Goodland
4,246,895 A 1/1981 Rehder
4,299,224 A 11/1981 Noiles
4,304,178 A 12/1981 Haberle
4,306,866 A 12/1981 Weissman
4,311,145 A 1/1982 Esty et al.
4,324,006 A 4/1982 Charnley
4,344,193 A 8/1982 Kenny
4,349,018 A 9/1982 Chamber
4,373,709 A 2/1983 Whitt et al.
4,374,523 A 2/1983 Yoon
4,385,404 A 5/1983 Sully et al.
4,386,609 A 6/1983 Mongeon
4,400,833 A 8/1983 Kurland
4,421,112 A 12/1983 Mains et al.
4,428,571 A 1/1984 Sugarman
4,436,684 A 3/1984 White
4,444,240 A 4/1984 Bannister
D273,895 S 5/1984 Kenna et al.
D274,091 S 5/1984 Kenna
4,453,421 A 6/1984 Umano
4,457,306 A 7/1984 Borzone
4,475,549 A 10/1984 Oh
4,501,269 A 2/1985 Bagby
4,506,393 A 3/1985 Murphy
4,509,518 A 4/1985 Mcgarry et al.
4,516,276 A 5/1985 Mittelmeier
4,524,766 A 6/1985 Petersen
4,528,980 A 7/1985 Kenna
4,534,365 A 8/1985 Bonetta et al.
4,535,773 A 8/1985 Yoon
4,545,375 A 10/1985 Cline
4,554,686 A 11/1985 Baker
4,562,598 A 1/1986 Kranz
4,565,191 A 1/1986 Slocum
4,565,192 A 1/1986 Shapiro
4,567,886 A 2/1986 Petersen
4,574,794 A 3/1986 Cooke et al.
4,619,391 A 10/1986 Sharkany et al.
4,619,658 A 10/1986 Pappas et al.
4,621,630 A 11/1986 Kenna
4,624,254 A 11/1986 Mcgarry et al.
4,632,111 A 12/1986 Roche
4,633,862 A 1/1987 Petersen
4,641,648 A 2/1987 Shapiro
4,642,120 A 2/1987 Nevo et al.
4,646,729 A 3/1987 Kenna et al.
4,662,372 A 5/1987 Sharkany et al.
4,663,720 A 5/1987 Duret et al.
4,678,470 A 7/1987 Nashef et al.
4,682,598 A 7/1987 Beraha
4,685,460 A 8/1987 Thornton
4,689,984 A 9/1987 Kellner
4,695,283 A 9/1987 Aldinger
4,696,292 A 9/1987 Heiple
4,703,751 A 11/1987 Pohl
4,704,686 A 11/1987 Aldinger
4,706,660 A 11/1987 Petersen
4,711,233 A 12/1987 Brown

(56) **References Cited**

U.S. PATENT DOCUMENTS


| | | | |
|---|---|---|---|
| 4,715,860 | A | 12/1987 | Amstutz et al. |
| 4,718,413 | A | 1/1988 | Johnson |
| 4,718,916 | A | 1/1988 | Morscher |
| 4,719,907 | A | 1/1988 | Banko et al. |
| 4,721,104 | A | 1/1988 | Kaufman et al. |
| 4,722,330 | A | 2/1988 | Russell et al. |
| 4,739,751 | A | 4/1988 | Sapega et al. |
| 4,759,350 | A | 7/1988 | Dunn et al. |
| 4,778,474 | A | 10/1988 | Homsy |
| 4,794,854 | A | 1/1989 | Swaim |
| 4,800,874 | A | 1/1989 | David et al. |
| 4,813,149 | A | 3/1989 | Herkimer |
| 4,817,602 | A | 4/1989 | Beraha |
| 4,821,213 | A | 4/1989 | Cline et al. |
| 4,822,365 | A | 4/1989 | Walker et al. |
| 4,834,757 | A | 5/1989 | Brantigan |
| 4,838,891 | A | 6/1989 | Branemark et al. |
| 4,841,975 | A | 6/1989 | Woolson |
| 4,846,161 | A | 7/1989 | Roger |
| 4,863,472 | A | 9/1989 | Tormala et al. |
| 4,871,975 | A | 10/1989 | Nawata et al. |
| 4,888,022 | A | 12/1989 | Huebsch |
| 4,892,545 | A | 1/1990 | Day et al. |
| 4,893,619 | A | 1/1990 | Dale et al. |
| 4,896,663 | A | 1/1990 | Vandewalls |
| 4,907,577 | A | 3/1990 | Wu |
| 4,911,721 | A | 3/1990 | Andergaten |
| 4,927,422 | A | 5/1990 | Engelhardt |
| 4,935,023 | A | 6/1990 | Whiteside et al. |
| 4,936,852 | A | 6/1990 | Kent et al. |
| 4,936,862 | A | 6/1990 | Walker et al. |
| 4,950,296 | A | 8/1990 | Mcintyre |
| 4,952,213 | A | 8/1990 | Bowman et al. |
| 4,959,066 | A | 9/1990 | Dunn et al. |
| 4,961,740 | A | 10/1990 | Ray et al. |
| 4,961,954 | A | 10/1990 | Goldberg et al. |
| 4,964,865 | A | 10/1990 | Burkhead et al. |
| 4,976,737 | A | 12/1990 | Leake |
| 4,979,949 | A | 12/1990 | Matsen, III et al. |
| 4,979,957 | A | 12/1990 | Hodorek |
| 4,985,037 | A | 1/1991 | Petersen |
| 4,985,038 | A | 1/1991 | Lyell |
| 4,994,064 | A | 2/1991 | Aboczky |
| 5,002,579 | A | 3/1991 | Copf et al. |
| 5,006,121 | A | 4/1991 | Hafeli |
| 5,007,912 | A | 4/1991 | Albrektsson et al. |
| 5,007,936 | A | 4/1991 | Woolson |
| 5,015,247 | A | 5/1991 | Michelson |
| 5,019,105 | A | 5/1991 | Wiley |
| 5,030,219 | A | 7/1991 | Matsen et al. |
| 5,030,221 | A | 7/1991 | Buechel et al. |
| 5,032,132 | A | 7/1991 | Matsen, III et al. |
| 5,035,700 | A | 7/1991 | Kenna |
| 5,037,424 | A | 8/1991 | Aboczsky |
| 5,041,117 | A | 8/1991 | Engelhardt |
| 5,053,037 | A | 10/1991 | Lackey et al. |
| 5,053,039 | A | 10/1991 | Hofmann et al. |
| 5,056,351 | A | 10/1991 | Stiver et al. |
| 5,060,678 | A | 10/1991 | Bauman et al. |
| 5,061,270 | A | 10/1991 | Aboczky |
| 5,061,286 | A | 10/1991 | Lyle |
| 5,062,843 | A | 11/1991 | Mahony, III |
| 5,073,373 | A | 12/1991 | O'Leary et al. |
| 5,082,670 | A | 1/1992 | Gage et al. |
| 5,084,050 | A | 1/1992 | Draenert |
| 5,086,401 | A | 2/1992 | Glassman et al. |
| 5,092,869 | A | 3/1992 | Waldron |
| 5,098,383 | A | 3/1992 | Hemmy et al. |
| 5,098,436 | A | 3/1992 | Ferrante et al. |
| 5,098,437 | A | 3/1992 | Kashuba et al. |
| 5,099,859 | A | 3/1992 | Bell |
| 5,100,689 | A | 3/1992 | Goldberg et al. |
| 5,101,720 | A | 4/1992 | Bianchi |
| 5,108,425 | A | 4/1992 | Hwang |
| 5,108,441 | A | 4/1992 | Mcdowell |
| 5,111,987 | A | 5/1992 | Moeinzadeh et al. |
| 5,120,261 | A | 6/1992 | Dietzman |
| 5,122,144 | A | 6/1992 | Bert et al. |
| 5,123,906 | A | 6/1992 | Kelman |
| 5,123,927 | A | 6/1992 | Duncan et al. |
| 5,129,908 | A | 7/1992 | Petersen |
| 5,129,909 | A | 7/1992 | Sutherland |
| 5,133,760 | A | 7/1992 | Petersen et al. |
| 5,140,777 | A | 8/1992 | Ushiyama et al. |
| 5,141,512 | A | 8/1992 | Farmer et al. |
| 5,147,365 | A | 9/1992 | Whitlock et al. |
| 5,150,304 | A | 9/1992 | Berchem et al. |
| 5,152,744 | A | 10/1992 | Krause et al. |
| 5,152,778 | A | 10/1992 | Bales, Jr. et al. |
| 5,154,717 | A | 10/1992 | Matsen, III et al. |
| 5,162,506 | A | 11/1992 | Hadden |
| 5,163,949 | A | 11/1992 | Bonutti |
| 5,170,800 | A | 12/1992 | Smith et al. |
| 5,171,243 | A | 12/1992 | Kashuba et al. |
| 5,171,244 | A | 12/1992 | Caspari et al. |
| 5,171,276 | A | 12/1992 | Caspari et al. |
| 5,174,300 | A | 12/1992 | Bales et al. |
| 5,176,684 | A | 1/1993 | Ferrante et al. |
| 5,176,702 | A | 1/1993 | Bales et al. |
| 5,176,711 | A | 1/1993 | Grimes |
| 5,178,622 | A | 1/1993 | Lehner, II |
| 5,183,053 | A | 2/1993 | Yeh |
| 5,183,464 | A | 2/1993 | Dubrul et al. |
| 5,186,178 | A | 2/1993 | Yeh |
| 5,192,327 | A | 3/1993 | Brantigan |
| 5,194,066 | A | 3/1993 | Van Zile |
| 5,197,968 | A | 3/1993 | Clement |
| 5,197,971 | A | 3/1993 | Bonutti |
| 5,197,987 | A | 3/1993 | Koch et al. |
| 5,204,106 | A | 4/1993 | Schepers et al. |
| 5,207,680 | A | 5/1993 | Dietz et al. |
| 5,207,692 | A | 5/1993 | Kraus et al. |
| 5,217,463 | A | 6/1993 | Mikhail |
| 5,222,984 | A | 6/1993 | Forte |
| 5,228,459 | A | 7/1993 | Caspari et al. |
| 5,234,433 | A | 8/1993 | Bert et al. |
| 5,242,448 | A | 9/1993 | Pettine et al. |
| 5,246,444 | A | 9/1993 | Schreiber |
| 5,253,506 | A | 10/1993 | Davis et al. |
| 5,258,004 | A | 11/1993 | Bales et al. |
| 5,258,032 | A | 11/1993 | Bertin |
| 5,261,915 | A | 11/1993 | Durlacher et al. |
| 5,263,498 | A | 11/1993 | Caspari et al. |
| 5,263,987 | A | 11/1993 | Shah |
| 5,269,785 | A | 12/1993 | Bonutti |
| 5,273,524 | A | 12/1993 | Fox et al. |
| 5,274,565 | A | 12/1993 | Reuben |
| D343,247 | S | 1/1994 | Walen |
| 5,275,166 | A | 1/1994 | Vaitekunas et al. |
| 5,275,603 | A | 1/1994 | Ferrante et al. |
| 5,282,802 | A | 2/1994 | Mahony, III |
| 5,282,803 | A | 2/1994 | Lackey |
| 5,285,773 | A | 2/1994 | Bonutti et al. |
| 5,293,878 | A | 3/1994 | Bales et al. |
| 5,295,994 | A | 3/1994 | Bonutti |
| 5,299,288 | A | 3/1994 | Glassman et al. |
| 5,300,077 | A | 4/1994 | Howell |
| 5,304,181 | A | 4/1994 | Caspari et al. |
| 5,306,285 | A | 4/1994 | Miller et al. |
| 5,308,349 | A | 5/1994 | Mikhail |
| 5,314,482 | A | 5/1994 | Goodfellow et al. |
| 5,320,529 | A | 6/1994 | Pompa |
| 5,320,625 | A | 6/1994 | Bertin |
| 5,322,505 | A | 6/1994 | Krause et al. |
| 5,323,697 | A | 6/1994 | Schrock |
| 5,329,845 | A | 7/1994 | Bichel |
| 5,342,366 | A | 8/1994 | Whiteside et al. |
| 5,342,367 | A | 8/1994 | Ferrante et al. |
| 5,342,368 | A | 8/1994 | Petersen |
| 5,344,423 | A | 9/1994 | Dietz et al. |
| 5,344,458 | A | 9/1994 | Bonutti |
| 5,348,541 | A | 9/1994 | Lyell |
| 5,360,446 | A | 11/1994 | Kennedy |
| 5,364,402 | A | 11/1994 | Mumme et al. |

(56) **References Cited**

U.S. PATENT DOCUMENTS

5,368,599 A 11/1994 Hirsch et al.
5,368,858 A 11/1994 Hunziker
5,370,692 A 12/1994 Fink et al.
5,370,699 A 12/1994 Hood et al.
5,379,133 A 1/1995 Kirk
5,382,249 A 1/1995 Fletcher et al.
5,383,937 A 1/1995 Mikhail
5,390,683 A 2/1995 Pisharodi
5,395,376 A 3/1995 Caspari et al.
5,405,395 A 4/1995 Coates
5,408,409 A 4/1995 Glassman et al.
D358,647 S 5/1995 Cohen et al.
5,411,521 A 5/1995 Putnam et al.
5,415,662 A 5/1995 Ferrante et al.
5,417,694 A 5/1995 Marik et al.
5,423,827 A 6/1995 Mumme et al.
5,425,355 A 6/1995 Kulick
5,425,745 A 6/1995 Green et al.
5,438,263 A 8/1995 Dworkin et al.
5,440,496 A 8/1995 Andersson et al.
5,443,475 A 8/1995 Auerbach et al.
5,445,639 A 8/1995 Kuslich et al.
5,445,642 A 8/1995 McNulty et al.
5,448,489 A 9/1995 Reuben
5,449,360 A 9/1995 Schreiber
5,452,407 A 9/1995 Crook
5,454,365 A 10/1995 Bonutti
5,454,815 A 10/1995 Geisser et al.
5,454,816 A 10/1995 Ashby
5,456,268 A 10/1995 Bonutti
5,462,550 A 10/1995 Dietz et al.
5,472,415 A 12/1995 King et al.
5,474,559 A 12/1995 Bertin et al.
5,484,095 A 1/1996 Green et al.
5,486,178 A 1/1996 Hodge
5,490,854 A 2/1996 Fisher et al.
5,496,324 A 3/1996 Barnes
5,497,933 A 3/1996 Defonzo et al.
5,507,763 A 4/1996 Petersen et al.
5,507,833 A 4/1996 Bohn
5,514,139 A 5/1996 Goldstein et al.
5,514,143 A 5/1996 Bonutti et al.
5,514,519 A 5/1996 Neckers
5,520,692 A 5/1996 Ferrante
5,520,694 A 5/1996 Dance et al.
5,520,695 A 5/1996 Luckman
5,522,897 A 6/1996 King et al.
5,527,317 A 6/1996 Ashby et al.
5,539,649 A 7/1996 Walsh et al.
5,540,695 A 7/1996 Levy
5,545,222 A 8/1996 Bonutti
5,546,720 A 8/1996 Labruzza
5,549,683 A 8/1996 Bonutti
5,549,688 A 8/1996 Ries et al.
5,554,169 A 9/1996 Green et al.
5,554,190 A 9/1996 Draenert
5,560,096 A 10/1996 Stephens
5,560,728 A 10/1996 Mcfadden
5,562,675 A 10/1996 Mcnulty et al.
5,569,163 A 10/1996 Francis et al.
5,569,261 A 10/1996 Marik et al.
5,570,700 A 11/1996 Vogeler
5,571,110 A 11/1996 Matsen, III et al.
5,571,111 A 11/1996 Aboczky
5,578,037 A 11/1996 Sanders et al.
5,578,039 A 11/1996 Vendrely et al.
5,586,558 A 12/1996 Riley
5,593,411 A 1/1997 Stalcup et al.
5,593,448 A 1/1997 Dong
5,595,703 A 1/1997 Swaelens et al.
5,597,379 A 1/1997 Haines et al.
5,601,565 A 2/1997 Huebner
5,607,431 A 3/1997 Dudasik et al.
5,608,052 A 3/1997 Zmitek et al.
5,609,603 A 3/1997 Linden
5,611,802 A 3/1997 Samuelson et al.
5,613,969 A 3/1997 Jenkins, Jr.
5,616,147 A 4/1997 Gadelius
5,620,448 A 4/1997 Puddu
5,624,444 A 4/1997 Wixon et al.
5,624,463 A 4/1997 Stone et al.
5,632,745 A 5/1997 Schwartz
5,634,927 A 6/1997 Houston et al.
5,641,323 A 6/1997 Caldarise
5,643,272 A 7/1997 Haines et al.
5,649,946 A 7/1997 Bramlet
5,649,947 A 7/1997 Auerbach et al.
5,653,714 A 8/1997 Dietz et al.
5,658,294 A 8/1997 Sederholm
5,659,947 A 8/1997 Eilers et al.
5,662,656 A 9/1997 White
5,662,710 A 9/1997 Bonutti
5,667,069 A 9/1997 Williams, Jr.
5,667,511 A 9/1997 Vendrely et al.
5,667,512 A 9/1997 Johnson
5,667,520 A 9/1997 Bonutti
5,671,018 A 9/1997 Ohara et al.
D385,163 S 10/1997 Hutchins et al.
5,676,668 A 10/1997 McCue et al.
5,677,107 A 10/1997 Neckers
5,681,316 A 10/1997 DeOrio et al.
5,681,354 A 10/1997 Eckhoff
5,682,886 A 11/1997 Delp et al.
5,683,398 A 11/1997 Carls et al.
5,683,469 A 11/1997 Johnson et al.
5,688,279 A 11/1997 McNulty et al.
5,688,280 A 11/1997 Booth, Jr. et al.
5,690,635 A 11/1997 Matsen, III et al.
5,694,693 A 12/1997 Hutchins et al.
5,697,933 A 12/1997 Gundlapalli et al.
5,702,447 A 12/1997 Walch et al.
5,702,460 A 12/1997 Carls et al.
5,702,464 A 12/1997 Lackey et al.
5,702,475 A 12/1997 Zahedi
5,704,941 A 1/1998 Jacober et al.
5,707,350 A 1/1998 Krause et al.
5,709,689 A 1/1998 Ferrante et al.
5,712,543 A 1/1998 Sjostrom
5,716,360 A 2/1998 Baldwin et al.
5,718,708 A 2/1998 Webb
5,720,752 A 2/1998 Elliott et al.
5,722,978 A 3/1998 Jenkins, Jr.
5,723,331 A 3/1998 Tubo et al.
5,725,376 A 3/1998 Poirier
5,725,592 A 3/1998 White et al.
5,725,593 A 3/1998 Caracciolo
5,728,128 A 3/1998 Crickenberger et al.
5,733,292 A 3/1998 Gustilo et al.
5,735,277 A 4/1998 Schuster
5,745,834 A 4/1998 Bampton et al.
5,748,767 A 5/1998 Raab
5,749,875 A 5/1998 Puddu
5,749,876 A 5/1998 Duvillier et al.
5,755,731 A 5/1998 Grinberg
5,755,791 A 5/1998 Whitson et al.
5,755,803 A 5/1998 Haines et al.
5,762,125 A 6/1998 Mastrorio
5,766,251 A 6/1998 Koshino
5,768,134 A 6/1998 Swaelens et al.
5,769,092 A 6/1998 Williamson, Jr.
5,769,855 A 6/1998 Bertin et al.
5,769,899 A 6/1998 Schwartz et al.
5,772,594 A 6/1998 Barrick
5,776,200 A 7/1998 Johnson et al.
5,786,217 A 7/1998 Tubo et al.
5,788,700 A 8/1998 Morawa et al.
5,792,143 A 8/1998 Samuelson et al.
5,798,924 A 8/1998 Eufinger et al.
5,799,055 A 8/1998 Peshkin et al.
5,810,827 A 9/1998 Haines et al.
5,810,831 A 9/1998 D'Antonio
5,817,097 A 10/1998 Howard et al.
5,817,109 A 10/1998 Mcgarry et al.
5,824,083 A 10/1998 Draenert

(56) **References Cited**

U.S. PATENT DOCUMENTS


| | | | |
|---|---|---|---|
| 5,835,619 | A | 11/1998 | Morimoto et al. |
| 5,842,477 | A | 12/1998 | Naughton et al. |
| 5,846,931 | A | 12/1998 | Hattersley et al. |
| 5,860,980 | A | 1/1999 | Axelson, Jr. et al. |
| 5,860,981 | A | 1/1999 | Bertin et al. |
| 5,866,415 | A | 2/1999 | Villeneuve |
| 5,871,018 | A | 2/1999 | Delp et al. |
| 5,871,493 | A | 2/1999 | Sjostrom et al. |
| 5,876,456 | A | 3/1999 | Sederholm et al. |
| 5,879,354 | A | 3/1999 | Haines et al. |
| 5,879,398 | A | 3/1999 | Swarts et al. |
| 5,879,402 | A | 3/1999 | Lawes et al. |
| 5,879,404 | A | 3/1999 | Bateman et al. |
| 5,880,976 | A | 3/1999 | DiGioia III et al. |
| 5,885,297 | A | 3/1999 | Matsen |
| 5,885,298 | A | 3/1999 | Herrington et al. |
| 5,888,219 | A | 3/1999 | Bonutti |
| 5,895,389 | A | 4/1999 | Schenk et al. |
| 5,899,907 | A | 5/1999 | Johnson |
| 5,899,914 | A | 5/1999 | Zirps et al. |
| 5,901,060 | A | 5/1999 | Schall et al. |
| 5,902,340 | A | 5/1999 | White et al. |
| 5,908,424 | A | 6/1999 | Bertin et al. |
| 5,911,723 | A | 6/1999 | Ashby et al. |
| 5,911,724 | A | 6/1999 | Wehrli |
| 5,913,874 | A | 6/1999 | Berns et al. |
| 5,916,219 | A | 6/1999 | Matsuno et al. |
| 5,921,988 | A | 7/1999 | Legrand |
| 5,921,990 | A | 7/1999 | Webb |
| 5,925,049 | A | 7/1999 | Gustilo et al. |
| 5,925,077 | A | 7/1999 | Williamson et al. |
| 5,942,370 | A | 8/1999 | Neckers |
| 5,961,499 | A | 10/1999 | Bonutti et al. |
| 5,967,777 | A | 10/1999 | Klein et al. |
| 5,976,149 | A | 11/1999 | Masini |
| 5,980,526 | A | 11/1999 | Johnson et al. |
| 5,995,738 | A | 11/1999 | DiGioia, III et al. |
| 5,997,566 | A | 12/1999 | Tobin |
| 6,002,859 | A | 12/1999 | DiGioia, III et al. |
| 6,007,537 | A | 12/1999 | Burkinshaw et al. |
| 6,008,433 | A | 12/1999 | Stone |
| 6,012,456 | A | 1/2000 | Schuerch |
| 6,013,081 | A | 1/2000 | Burkinshaw et al. |
| 6,015,419 | A | 1/2000 | Strome et al. |
| 6,019,767 | A | 2/2000 | Howell |
| 6,022,350 | A | 2/2000 | Ganem |
| 6,022,356 | A | 2/2000 | Noyes et al. |
| 6,024,746 | A | 2/2000 | Katz |
| 6,033,415 | A | 3/2000 | Mittelstadt et al. |
| 6,042,612 | A | 3/2000 | Voydeville |
| 6,056,754 | A | 5/2000 | Haines et al. |
| 6,056,756 | A | 5/2000 | Eng et al. |
| 6,059,789 | A | 5/2000 | Dinger |
| 6,059,817 | A | 5/2000 | Bonutti et al. |
| 6,059,831 | A | 5/2000 | Braslow et al. |
| 6,059,833 | A | 5/2000 | Doets |
| 6,063,095 | A | 5/2000 | Wang et al. |
| 6,066,175 | A | 5/2000 | Henderson et al. |
| 6,077,270 | A | 6/2000 | Katz |
| 6,077,287 | A | 6/2000 | Taylor et al. |
| 6,086,593 | A | 7/2000 | Bonutti |
| 6,090,122 | A | 7/2000 | Sjostrom et al. |
| 6,096,043 | A | 8/2000 | Techiera et al. |
| 6,099,531 | A | 8/2000 | Bonutti |
| 6,099,532 | A | 8/2000 | Florea |
| 6,102,850 | A | 8/2000 | Wang et al. |
| 6,106,529 | A | 8/2000 | Techiera |
| 6,118,845 | A | 9/2000 | Simon et al. |
| 6,120,509 | A | 9/2000 | Wheeler |
| 6,120,510 | A | 9/2000 | Albrektsson et al. |
| 6,120,544 | A | 9/2000 | Grundei et al. |
| 6,126,690 | A | 10/2000 | Ateshian et al. |
| 6,126,692 | A | 10/2000 | Robie et al. |
| 6,132,469 | A | 10/2000 | Schroeder |
| 6,132,472 | A | 10/2000 | Bonutti |
| 6,136,033 | A | 10/2000 | Suemer |
| 6,156,069 | A | 12/2000 | Amstutz |
| 6,156,070 | A | 12/2000 | Incavo et al. |
| 6,159,217 | A | 12/2000 | Robie et al. |
| 6,159,246 | A | 12/2000 | Mendes et al. |
| 6,161,080 | A | 12/2000 | Aouni-Ateshian et al. |
| 6,162,257 | A | 12/2000 | Gustilo et al. |
| 6,165,223 | A | 12/2000 | Metzger et al. |
| 6,171,340 | B1 | 1/2001 | Mcdowell et al. |
| 6,174,321 | B1 | 1/2001 | Webb |
| 6,185,315 | B1 | 2/2001 | Schmucker et al. |
| 6,187,010 | B1 | 2/2001 | Masini |
| 6,187,023 | B1 | 2/2001 | Bonutti |
| 6,195,158 | B1 | 2/2001 | Cadell et al. |
| 6,195,615 | B1 | 2/2001 | Lysen |
| 6,197,064 | B1 | 3/2001 | Haines et al. |
| 6,198,794 | B1 | 3/2001 | Peshkin et al. |
| 6,203,546 | B1 | 3/2001 | Macmahon |
| 6,205,411 | B1 | 3/2001 | Digioia, III et al. |
| 6,206,927 | B1 | 3/2001 | Fell et al. |
| 6,210,445 | B1 | 4/2001 | Zawadzki |
| 6,211,976 | B1 | 4/2001 | Popovich et al. |
| 6,214,051 | B1 | 4/2001 | Badorf et al. |
| 6,228,121 | B1 | 5/2001 | Khalili |
| 6,238,435 | B1 | 5/2001 | Meulink et al. |
| 6,254,604 | B1 | 7/2001 | Howell |
| 6,258,097 | B1 | 7/2001 | Cook et al. |
| 6,258,127 | B1 | 7/2001 | Schmotzer |
| 6,264,698 | B1 | 7/2001 | Lawes et al. |
| 6,270,529 | B1 | 8/2001 | Terrill-Grisoni et al. |
| 6,273,891 | B1 | 8/2001 | Masini |
| 6,277,136 | B1 | 8/2001 | Bonutti et al. |
| 6,290,703 | B1 | 9/2001 | Ganem |
| 6,290,704 | B1 | 9/2001 | Burkinshaw et al. |
| 6,290,727 | B1 | 9/2001 | Otto et al. |
| 6,293,971 | B1 | 9/2001 | Nelson et al. |
| 6,301,495 | B1 | 10/2001 | Gueziec et al. |
| 6,302,913 | B1 | 10/2001 | Ripamonti et al. |
| 6,310,269 | B1 | 10/2001 | Friese et al. |
| 6,312,258 | B1 | 11/2001 | Ashman |
| 6,312,473 | B1 | 11/2001 | Oshida |
| 6,319,285 | B1 | 11/2001 | Chamier et al. |
| 6,322,728 | B1 | 11/2001 | Brodkin et al. |
| 6,325,806 | B1 | 12/2001 | Fox |
| 6,325,829 | B1 | 12/2001 | Schmotzer |
| 6,327,491 | B1 | 12/2001 | Franklin et al. |
| 6,328,572 | B1 | 12/2001 | Higashida et al. |
| 6,338,737 | B1 | 1/2002 | Toledano |
| 6,338,738 | B1 | 1/2002 | Bellotti et al. |
| 6,343,987 | B2 | 2/2002 | Hayama et al. |
| 6,354,011 | B1 | 3/2002 | Albrecht |
| 6,358,266 | B1 | 3/2002 | Bonutti |
| 6,361,506 | B1 | 3/2002 | Saenger et al. |
| 6,361,563 | B2 | 3/2002 | Terrill-Grisoni et al. |
| 6,361,565 | B1 | 3/2002 | Bonutti |
| 6,379,299 | B1 | 4/2002 | Borodulin et al. |
| 6,379,388 | B1 | 4/2002 | Ensign et al. |
| 6,383,228 | B1 | 5/2002 | Schmotzer |
| 6,391,040 | B1 | 5/2002 | Christoudias |
| 6,391,251 | B1 | 5/2002 | Keicher et al. |
| 6,395,005 | B1 | 5/2002 | Lovell |
| 6,406,495 | B1 | 6/2002 | Schoch |
| 6,409,722 | B1 | 6/2002 | Hoey et al. |
| 6,413,279 | B1 | 7/2002 | Metzger et al. |
| 6,416,553 | B1 | 7/2002 | White et al. |
| 6,423,063 | B1 | 7/2002 | Bonutti |
| 6,423,068 | B1 | 7/2002 | Reisberg et al. |
| 6,424,332 | B1 | 7/2002 | Powell |
| 6,427,698 | B1 | 8/2002 | Yoon et al. |
| 6,428,541 | B1 | 8/2002 | Boyd et al. |
| 6,431,743 | B1 | 8/2002 | Mizutani et al. |
| D462,767 | S | 9/2002 | Meyer et al. |
| 6,447,448 | B1 | 9/2002 | Ishikawa et al. |
| 6,458,135 | B1 | 10/2002 | Harwin et al. |
| 6,459,948 | B1 | 10/2002 | Ateshian et al. |
| 6,463,351 | B1 | 10/2002 | Clynch |
| 6,468,280 | B1 | 10/2002 | Saenger et al. |
| 6,468,289 | B1 | 10/2002 | Bonutti |
| 6,475,243 | B1 | 11/2002 | Sheldon et al. |

(56) **References Cited**

U.S. PATENT DOCUMENTS


| | | | |
|---|---|---|---|
| 6,478,799 | B1 | 11/2002 | Williamson |
| 6,482,209 | B1 | 11/2002 | Engh et al. |
| 6,482,236 | B2 | 11/2002 | Habecker |
| 6,488,715 | B1 | 12/2002 | Pope et al. |
| 6,500,181 | B1 | 12/2002 | Portney |
| 6,503,255 | B1 | 1/2003 | Albrektsson et al. |
| 6,503,267 | B2 | 1/2003 | Bonutti et al. |
| 6,508,980 | B1 | 1/2003 | Sachs et al. |
| 6,510,334 | B1 | 1/2003 | Schuster et al. |
| 6,514,259 | B2 | 2/2003 | Picard et al. |
| 6,517,583 | B1 | 2/2003 | Pope et al. |
| 6,519,998 | B2 | 2/2003 | Ertl et al. |
| 6,520,964 | B2 | 2/2003 | Tallarida et al. |
| 6,533,737 | B1 | 3/2003 | Brosseau et al. |
| 6,547,823 | B2 | 4/2003 | Scarborough et al. |
| 6,551,325 | B2 | 4/2003 | Neubauer et al. |
| 6,554,837 | B1 | 4/2003 | Hauri et al. |
| 6,554,838 | B2 | 4/2003 | Mcgovern et al. |
| 6,556,008 | B2 | 4/2003 | Thesen |
| 6,558,391 | B2 | 5/2003 | Axelson, Jr. et al. |
| 6,558,428 | B2 | 5/2003 | Park |
| 6,562,073 | B2 | 5/2003 | Foley |
| 6,564,085 | B2 | 5/2003 | Meaney et al. |
| 6,567,681 | B1 | 5/2003 | Lindequist |
| 6,575,980 | B1 | 6/2003 | Robie et al. |
| 6,575,982 | B1 | 6/2003 | Bonutti |
| 6,583,630 | B2 | 6/2003 | Mendes et al. |
| 6,589,283 | B1 | 7/2003 | Metzger et al. |
| 6,591,581 | B2 | 7/2003 | Schmieding |
| 6,602,259 | B1 | 8/2003 | Masini |
| 6,605,293 | B1 | 8/2003 | Giordano et al. |
| 6,610,067 | B2 | 8/2003 | Tallarida et al. |
| 6,610,096 | B2 | 8/2003 | MacDonald |
| 6,620,181 | B1 | 9/2003 | Bonutti |
| 6,622,567 | B1 | 9/2003 | Hamel et al. |
| 6,629,999 | B1 | 10/2003 | Serafin, Jr. |
| 6,632,225 | B2 | 10/2003 | Sanford et al. |
| 6,635,073 | B2 | 10/2003 | Bonutti |
| 6,641,617 | B1 | 11/2003 | Merrill et al. |
| 6,673,077 | B1 | 1/2004 | Katz |
| 6,676,662 | B1 | 1/2004 | Bagga et al. |
| 6,676,892 | B2 | 1/2004 | Das et al. |
| 6,682,566 | B2 | 1/2004 | Draenert et al. |
| 6,682,567 | B1 | 1/2004 | Schroeder |
| 6,695,848 | B2 | 2/2004 | Haines |
| 6,696,073 | B2 | 2/2004 | Boyce et al. |
| 6,697,664 | B2 | 2/2004 | Kienzle, III et al. |
| 6,699,289 | B2 | 3/2004 | Iannotti et al. |
| 6,701,174 | B1 | 3/2004 | Krause et al. |
| 6,702,821 | B2 | 3/2004 | Bonutti |
| 6,709,462 | B2 | 3/2004 | Hanssen |
| 6,711,431 | B2 | 3/2004 | Sarin et al. |
| 6,711,432 | B1 | 3/2004 | Krause et al. |
| 6,712,856 | B1 | 3/2004 | Carignan et al. |
| 6,716,249 | B2 | 4/2004 | Hyde |
| 6,725,077 | B1 | 4/2004 | Balloni et al. |
| 6,738,657 | B1 | 5/2004 | Franklin et al. |
| 6,740,092 | B2 | 5/2004 | Lombardo et al. |
| 6,743,235 | B2 | 6/2004 | Subba Rao |
| 6,746,487 | B2 | 6/2004 | Scifert et al. |
| 6,749,638 | B1 | 6/2004 | Saladiono |
| 6,750,653 | B1 | 6/2004 | Zou et al. |
| 6,770,078 | B2 | 8/2004 | Bonutti |
| 6,772,026 | B2 | 8/2004 | Bradbury et al. |
| 6,780,190 | B2 | 8/2004 | Maroney |
| 6,786,930 | B2 | 9/2004 | Biscup |
| 6,799,066 | B2 | 9/2004 | Steines et al. |
| 6,810,753 | B2 | 11/2004 | Valdevit et al. |
| 6,821,299 | B2 | 11/2004 | Kirking et al. |
| 6,823,871 | B2 | 11/2004 | Schmieding |
| 6,827,723 | B2 | 12/2004 | Carson |
| 6,871,549 | B2 | 3/2005 | Serra et al. |
| 6,887,247 | B1 | 5/2005 | Couture et al. |
| 6,905,514 | B2 | 6/2005 | Carignan et al. |
| 6,916,324 | B2 | 7/2005 | Sanford et al. |
| 6,923,817 | B2 | 8/2005 | Carson et al. |
| 6,923,831 | B2 | 8/2005 | Fell et al. |
| 6,932,842 | B1 | 8/2005 | Litschko et al. |
| 6,942,475 | B2 | 9/2005 | Ensign et al. |
| 6,944,518 | B2 | 9/2005 | Roose |
| 6,945,976 | B2 | 9/2005 | Ball et al. |
| 6,953,480 | B2 | 10/2005 | Mears et al. |
| 6,960,216 | B2 | 11/2005 | Kolb et al. |
| 6,966,932 | B1 | 11/2005 | Schroeder |
| 6,975,755 | B1 | 12/2005 | Baumberg |
| 6,978,188 | B1 | 12/2005 | Christensen |
| 6,979,299 | B2 | 12/2005 | Peabody et al. |
| 6,990,220 | B2 | 1/2006 | Ellis et al. |
| 6,993,406 | B1 | 1/2006 | Cesarano, III et al. |
| 7,001,385 | B2 | 2/2006 | Bonutti |
| 7,001,393 | B2 | 2/2006 | Schwenke et al. |
| 7,022,141 | B2 | 4/2006 | Dwyer et al. |
| 7,029,477 | B2 | 4/2006 | Grimm |
| 7,029,479 | B2 | 4/2006 | Tallarida et al. |
| 7,042,222 | B2 | 5/2006 | Zheng et al. |
| 7,048,741 | B2 | 5/2006 | Swanson |
| 7,050,877 | B2 | 5/2006 | Iseki et al. |
| 7,060,074 | B2 | 6/2006 | Rosa et al. |
| 7,074,241 | B2 | 7/2006 | Mckinnon |
| RE39,301 | E | 9/2006 | Bertin |
| 7,104,995 | B2 | 9/2006 | Crofford |
| 7,104,997 | B2 | 9/2006 | Lionberger et al. |
| 7,105,026 | B2 | 9/2006 | Johnson et al. |
| 7,115,131 | B2 | 10/2006 | Engh et al. |
| 7,121,832 | B2 | 10/2006 | Hsieh et al. |
| 7,141,053 | B2 | 11/2006 | Rosa et al. |
| D533,664 | S | 12/2006 | Büttler et al. |
| 7,169,185 | B2 | 1/2007 | Sidebotham |
| 7,172,599 | B2 | 2/2007 | Steffensmeier et al. |
| 7,174,282 | B2 | 2/2007 | Hollister et al. |
| 7,176,466 | B2 | 2/2007 | Rousso et al. |
| 7,184,814 | B2 | 2/2007 | Lang et al. |
| 7,198,628 | B2 | 4/2007 | Ondrla et al. |
| 7,218,232 | B2 | 5/2007 | Disilvestro et al. |
| 7,220,264 | B1 | 5/2007 | Hershberger |
| 7,239,908 | B1 | 7/2007 | Alexander et al. |
| 7,241,315 | B2 | 7/2007 | Evans |
| 7,255,702 | B2 | 8/2007 | Serra et al. |
| 7,258,701 | B2 | 8/2007 | Aram et al. |
| 7,261,719 | B1 | 8/2007 | Twomey et al. |
| 7,275,218 | B2 | 9/2007 | Petrella et al. |
| 7,282,054 | B2 | 10/2007 | Steffensmeier et al. |
| 7,291,117 | B2 | 11/2007 | Boecker et al. |
| 7,291,177 | B2 | 11/2007 | Gibbs |
| 7,294,133 | B2 | 11/2007 | Zink et al. |
| 7,297,164 | B2 | 11/2007 | Johnson et al. |
| 7,309,339 | B2 | 12/2007 | Cusick et al. |
| 7,331,965 | B2 | 2/2008 | Nielsen |
| 7,333,013 | B2 | 2/2008 | Berger |
| 7,335,207 | B1 | 2/2008 | Smith |
| 7,335,231 | B2 | 2/2008 | Mclean |
| 7,338,499 | B1 | 3/2008 | Kuczynski et al. |
| 7,371,260 | B2 | 5/2008 | Malinin |
| 7,377,182 | B2 | 5/2008 | Serra et al. |
| 7,383,164 | B2 | 6/2008 | Aram et al. |
| 7,385,498 | B2 | 6/2008 | Dobosz |
| 7,388,972 | B2 | 6/2008 | Kitson |
| 7,390,327 | B2 | 6/2008 | Collazo et al. |
| 7,392,076 | B2 | 6/2008 | Moctezuma De La Barrera |
| 7,419,492 | B2 | 9/2008 | Yoon et al. |
| 7,427,200 | B2 | 9/2008 | Noble et al. |
| 7,427,272 | B2 | 9/2008 | Richard et al. |
| 7,458,989 | B2 | 12/2008 | Banks |
| 7,465,320 | B1 | 12/2008 | Kito et al. |
| 7,468,075 | B2 | 12/2008 | Lang et al. |
| 7,474,223 | B2 | 1/2009 | Nycz et al. |
| 7,488,324 | B1 | 2/2009 | Metzger et al. |
| 7,488,325 | B2 | 2/2009 | Qian et al. |
| 7,494,510 | B2 | 2/2009 | Zweymuller |
| 7,517,365 | B2 | 4/2009 | Carignan et al. |
| 7,519,540 | B2 | 4/2009 | Mayaud |
| 7,527,631 | B2 | 5/2009 | Maroney et al. |
| 7,534,263 | B2 | 5/2009 | Burdulis, Jr. et al. |
| 7,537,664 | B2 | 5/2009 | O'neill et al. |

(56) **References Cited**

U.S. PATENT DOCUMENTS


| | | | |
|---|---|---|---|
| 7,542,791 | B2 | 6/2009 | Mire et al. |
| 7,559,931 | B2 | 7/2009 | Stone |
| 7,575,602 | B2 | 8/2009 | Amirouche et al. |
| 7,578,851 | B2 | 8/2009 | Dong et al. |
| 7,582,091 | B2 | 9/2009 | Duncan et al. |
| 7,591,821 | B2 | 9/2009 | Kelman |
| 7,601,155 | B2 | 10/2009 | Petersen |
| 7,603,192 | B2 | 10/2009 | Martin et al. |
| 7,604,639 | B2 | 10/2009 | Swanson |
| 7,611,516 | B2 | 11/2009 | Maroney |
| 7,618,451 | B2 | 11/2009 | Berez et al. |
| 7,621,915 | B2 | 11/2009 | Frederick et al. |
| 7,625,409 | B2 | 12/2009 | Saltzman et al. |
| 7,636,595 | B2 | 12/2009 | Marquart |
| 7,646,161 | B2 | 1/2010 | Albu-schäffer et al. |
| 7,651,501 | B2 | 1/2010 | Penenberg et al. |
| 7,660,623 | B2 | 2/2010 | Hunter et al. |
| 7,670,345 | B2 | 3/2010 | Plassky et al. |
| 7,674,100 | B2 | 3/2010 | Hayes-pankhurst et al. |
| 7,682,398 | B2 | 3/2010 | Croxton et al. |
| 7,695,477 | B2 | 4/2010 | Creger et al. |
| 7,695,521 | B2 | 4/2010 | Ely et al. |
| 7,699,847 | B2 | 4/2010 | Sheldon et al. |
| 7,702,380 | B1 | 4/2010 | Dean |
| 7,704,253 | B2 | 4/2010 | Bastian et al. |
| 7,723,395 | B2 | 5/2010 | Ringeisen et al. |
| 7,747,305 | B2 | 6/2010 | Dean et al. |
| 7,752,690 | B1 | 7/2010 | Seth |
| D622,854 | S | 8/2010 | Otto et al. |
| 7,780,672 | B2 | 8/2010 | Metzger et al. |
| 7,780,681 | B2 | 8/2010 | Sarin et al. |
| 7,780,740 | B2 | 8/2010 | Steinberg |
| 7,789,885 | B2 | 9/2010 | Metzger |
| 7,794,466 | B2 | 9/2010 | Merchant et al. |
| 7,794,467 | B2 | 9/2010 | McGinley et al. |
| 7,794,504 | B2 | 9/2010 | Case |
| 7,806,896 | B1 | 10/2010 | Bonutti |
| 7,809,184 | B2 | 10/2010 | Neubauer et al. |
| 7,819,925 | B2 | 10/2010 | King et al. |
| 7,828,806 | B2 | 11/2010 | Graf et al. |
| 7,833,245 | B2 | 11/2010 | Kaes et al. |
| 7,837,040 | B2 | 11/2010 | Ward et al. |
| 7,837,690 | B2 | 11/2010 | Metzger |
| 7,846,382 | B2 | 12/2010 | Strand |
| 7,850,698 | B2 | 12/2010 | Straszheim-Morley et al. |
| 7,854,737 | B2 | 12/2010 | Daniels et al. |
| 7,879,109 | B2 | 2/2011 | Borden et al. |
| 7,892,261 | B2 | 2/2011 | Bonutti |
| 7,896,921 | B2 | 3/2011 | Smith et al. |
| 7,926,363 | B2 | 4/2011 | Miller et al. |
| 7,935,119 | B2 | 5/2011 | Ammann et al. |
| 7,935,150 | B2 | 5/2011 | Carignan et al. |
| 7,938,861 | B2 | 5/2011 | King et al. |
| 7,959,637 | B2 | 6/2011 | Fox et al. |
| 7,962,196 | B2 | 6/2011 | Tuma |
| 7,963,968 | B2 | 6/2011 | Dees, Jr. |
| 7,967,823 | B2 | 6/2011 | Ammann et al. |
| 7,967,868 | B2 | 6/2011 | White et al. |
| 7,974,677 | B2 | 7/2011 | Mire et al. |
| 7,981,158 | B2 | 7/2011 | Fitz et al. |
| 7,988,736 | B2 | 8/2011 | May et al. |
| 7,993,353 | B2 | 8/2011 | Roßner et al. |
| 8,014,984 | B2 | 9/2011 | Iannotti et al. |
| 8,057,482 | B2 | 11/2011 | Stone et al. |
| 8,062,301 | B2 | 11/2011 | Ammann et al. |
| 8,066,708 | B2 | 11/2011 | Lang et al. |
| 8,070,752 | B2 | 12/2011 | Metzger et al. |
| 8,083,745 | B2 | 12/2011 | Lang et al. |
| 8,083,746 | B2 | 12/2011 | Novak |
| 8,083,749 | B2 | 12/2011 | Taber |
| 8,086,336 | B2 | 12/2011 | Christensen |
| 8,092,465 | B2 | 1/2012 | Metzger et al. |
| 8,105,330 | B2 | 1/2012 | Fitz et al. |
| 8,109,942 | B2 | 2/2012 | Carson |
| 8,122,582 | B2 | 2/2012 | Burdulis, Jr. et al. |
| 8,133,230 | B2 | 3/2012 | Stevens et al. |
| 8,133,234 | B2 | 3/2012 | Meridew et al. |
| 8,137,406 | B2 | 3/2012 | Novak et al. |
| 8,147,861 | B2 | 4/2012 | Jones et al. |
| 8,160,345 | B2 | 4/2012 | Pavlovskaia et al. |
| 8,167,823 | B2 | 5/2012 | Nycz et al. |
| 8,167,951 | B2 | 5/2012 | Ammann et al. |
| 8,170,641 | B2 | 5/2012 | Belcher |
| 8,172,850 | B2 | 5/2012 | Mcminn |
| 8,182,489 | B2 | 5/2012 | Horacek |
| 8,192,441 | B2 | 6/2012 | Collazo |
| 8,192,495 | B2 | 6/2012 | Simpson et al. |
| 8,200,355 | B2 | 6/2012 | Lee et al. |
| 8,211,112 | B2 | 7/2012 | Novak et al. |
| 8,221,430 | B2 | 7/2012 | Park et al. |
| 8,241,292 | B2 | 8/2012 | Collazo |
| 8,241,293 | B2 | 8/2012 | Stone et al. |
| 8,246,680 | B2 | 8/2012 | Betz et al. |
| 8,260,589 | B1 | 9/2012 | Kumar |
| 8,265,790 | B2 | 9/2012 | Amiot et al. |
| 8,268,099 | B2 | 9/2012 | O'neill et al. |
| 8,268,100 | B2 | 9/2012 | O'neill et al. |
| D669,176 | S | 10/2012 | Frey |
| 8,282,646 | B2 | 10/2012 | Schoenfeld et al. |
| 8,298,237 | B2 | 10/2012 | Schoenfeld et al. |
| 8,303,596 | B2 | 11/2012 | Plaßky et al. |
| 8,313,491 | B2 | 11/2012 | Green, II et al. |
| D672,038 | S | 12/2012 | Frey |
| 8,333,772 | B2 | 12/2012 | Fox et al. |
| 8,337,426 | B2 | 12/2012 | Nycz |
| 8,337,501 | B2 | 12/2012 | Fitz et al. |
| 8,337,503 | B2 | 12/2012 | Lian |
| 8,355,773 | B2 | 1/2013 | Leitner et al. |
| 8,372,078 | B2 | 2/2013 | Collazo |
| 8,377,066 | B2 | 2/2013 | Katrana et al. |
| 8,388,690 | B2 | 3/2013 | Singhatat et al. |
| 8,398,646 | B2 | 3/2013 | Metzger et al. |
| 8,407,067 | B2 | 3/2013 | Uthgenannt et al. |
| 8,414,594 | B2 | 4/2013 | Berger et al. |
| 8,419,741 | B2 | 4/2013 | Carignan et al. |
| 8,425,522 | B2 | 4/2013 | Bonutti |
| 8,430,882 | B2 | 4/2013 | Lowry et al. |
| 8,430,931 | B2 | 4/2013 | Acker et al. |
| 8,439,675 | B2 | 5/2013 | De Moyer |
| 8,439,925 | B2 | 5/2013 | Marino et al. |
| 8,444,564 | B2 | 5/2013 | Mahfouz et al. |
| 8,444,651 | B2 | 5/2013 | Kunz et al. |
| 8,457,930 | B2 | 6/2013 | Schroeder |
| 8,460,302 | B2 | 6/2013 | Park et al. |
| 8,469,961 | B2 | 6/2013 | Alleyne et al. |
| 8,473,305 | B2 | 6/2013 | Belcher et al. |
| 8,486,150 | B2 | 7/2013 | White et al. |
| 8,500,740 | B2 | 8/2013 | Bojarski et al. |
| 8,529,578 | B2 | 9/2013 | Daniels et al. |
| 8,532,361 | B2 | 9/2013 | Pavlovskaia et al. |
| 8,532,806 | B1 | 9/2013 | Masson |
| 8,532,807 | B2 | 9/2013 | Metzger |
| 8,535,387 | B2 | 9/2013 | Meridew et al. |
| 8,543,234 | B2 | 9/2013 | Gao |
| 8,545,508 | B2 | 10/2013 | Collazo |
| 8,551,099 | B2 | 10/2013 | Lang et al. |
| 8,568,487 | B2 | 10/2013 | Witt et al. |
| 8,591,516 | B2 | 11/2013 | Metzger et al. |
| 8,597,365 | B2 | 12/2013 | Meridew |
| 8,603,180 | B2 | 12/2013 | White et al. |
| 8,608,748 | B2 | 12/2013 | Metzger et al. |
| 8,608,749 | B2 | 12/2013 | Meridew et al. |
| 8,617,170 | B2 | 12/2013 | Ashby et al. |
| 8,617,174 | B2 | 12/2013 | Axelson, Jr. et al. |
| 8,617,175 | B2 | 12/2013 | Park et al. |
| 8,632,547 | B2 | 1/2014 | Maxson et al. |
| 8,652,142 | B2 | 2/2014 | Geissler |
| 8,668,700 | B2 | 3/2014 | Catanzarite et al. |
| 8,702,712 | B2 | 4/2014 | Jordan et al. |
| 8,702,715 | B2 | 4/2014 | Ammann et al. |
| 8,706,285 | B2 | 4/2014 | Narainasamy et al. |
| 8,715,289 | B2 | 5/2014 | Smith |
| 8,728,387 | B2 | 5/2014 | Jones et al. |
| 8,735,773 | B2 | 5/2014 | Lang |

(56) **References Cited**

U.S. PATENT DOCUMENTS


| | | | |
|---|---|---|---|
| 8,764,760 | B2 | 7/2014 | Metzger et al. |
| 8,775,133 | B2 | 7/2014 | Schroeder |
| 8,777,875 | B2 | 7/2014 | Park |
| 8,781,557 | B2 | 7/2014 | Dean et al. |
| 8,801,719 | B2 | 8/2014 | Park et al. |
| 8,828,016 | B2 | 9/2014 | Major et al. |
| 8,828,087 | B2 | 9/2014 | Stone et al. |
| 8,828,089 | B1 | 9/2014 | Perez et al. |
| 8,834,568 | B2 | 9/2014 | Shapiro |
| 8,858,561 | B2 | 10/2014 | White et al. |
| 8,864,769 | B2 | 10/2014 | Stone et al. |
| 8,900,244 | B2 | 12/2014 | Meridew et al. |
| 8,903,530 | B2 | 12/2014 | Metzger |
| 8,956,364 | B2 | 2/2015 | Catanzarite |
| 8,979,936 | B2 | 3/2015 | White et al. |
| 8,986,309 | B1 | 3/2015 | Murphy |
| 9,005,297 | B2 | 4/2015 | Katrana et al. |
| 9,060,788 | B2 | 6/2015 | Bollinger |
| 9,066,734 | B2 | 6/2015 | Schoenefeld et al. |
| 9,107,139 | B2 | 8/2015 | Sirotkin et al. |
| 9,113,971 | B2 | 8/2015 | Metzger et al. |
| 9,173,661 | B2 | 11/2015 | Metzger et al. |
| 9,186,254 | B2 | 11/2015 | Fitz et al. |
| 9,208,558 | B2 | 12/2015 | Dean et al. |
| 9,241,745 | B2 | 1/2016 | Smith et al. |
| 9,271,744 | B2 | 3/2016 | Meridew |
| 9,275,191 | B2 | 3/2016 | Dean et al. |
| 9,289,253 | B2 | 3/2016 | Vanasse et al. |
| 9,292,920 | B2 | 3/2016 | Dean et al. |
| 9,317,631 | B2 | 4/2016 | Davison et al. |
| 9,330,206 | B2 | 5/2016 | Dean et al. |
| 9,339,278 | B2 | 5/2016 | Meridew et al. |
| 9,345,548 | B2 | 5/2016 | Schoenefeld et al. |
| 9,445,907 | B2 | 9/2016 | Meridew et al. |
| 9,456,833 | B2 | 10/2016 | Maxson et al. |
| 9,468,538 | B2 | 10/2016 | Nycz et al. |
| 9,480,490 | B2 | 11/2016 | Metzger et al. |
| 9,480,580 | B2 | 11/2016 | White et al. |
| 9,522,010 | B2 | 12/2016 | Metzger et al. |
| 9,539,013 | B2 | 1/2017 | Katrana et al. |
| 9,622,820 | B2 | 4/2017 | Baloch et al. |
| 9,662,127 | B2 | 5/2017 | Meridew et al. |
| 9,662,216 | B2 | 5/2017 | Witt et al. |
| 9,700,329 | B2 | 7/2017 | Metzger et al. |
| 9,730,616 | B2 | 8/2017 | Hershberger |
| 9,743,935 | B2 | 8/2017 | Smith et al. |
| 9,795,399 | B2 | 10/2017 | Metzger et al. |
| 9,861,387 | B2 | 1/2018 | Metzger et al. |
| 9,907,659 | B2 | 3/2018 | Belcher et al. |
| 9,913,734 | B2 | 3/2018 | White et al. |
| 9,918,740 | B2 | 3/2018 | Uthgenannt et al. |
| 9,968,376 | B2 | 5/2018 | Metzger et al. |
| 9,993,344 | B2 | 6/2018 | White et al. |
| 10,098,648 | B2 | 10/2018 | Meridew |
| 10,149,722 | B2 | 12/2018 | Aram et al. |
| 10,159,498 | B2 | 12/2018 | Uthgenannt et al. |
| 10,206,695 | B2 | 2/2019 | Meridew et al. |
| 10,206,697 | B2 | 2/2019 | Metzger et al. |
| 10,251,727 | B2 | 4/2019 | Choi et al. |
| 10,278,711 | B2 | 5/2019 | Meridew et al. |
| 10,390,845 | B2 | 8/2019 | Vanasse et al. |
| 10,426,492 | B2 | 10/2019 | Metzger et al. |
| 10,507,029 | B2 | 12/2019 | Meridew et al. |
| 10,603,179 | B2 | 3/2020 | Pierce et al. |
| 10,722,310 | B2 | 7/2020 | Luby et al. |
| 2001/0005797 | A1 | 6/2001 | Barlow et al. |
| 2001/0011190 | A1 | 8/2001 | Park |
| 2001/0018589 | A1 | 8/2001 | Muller |
| 2001/0021876 | A1 | 9/2001 | Terrill-Grisoni et al. |
| 2001/0034554 | A1 | 10/2001 | Pappas |
| 2001/0037155 | A1 | 11/2001 | Merchant |
| 2001/0054478 | A1 | 12/2001 | Watanabe et al. |
| 2002/0007294 | A1 | 1/2002 | Bradbury et al. |
| 2002/0029038 | A1 | 3/2002 | Haines |
| 2002/0029045 | A1 | 3/2002 | Bonutti |
| 2002/0052606 | A1 | 5/2002 | Bonutti |
| 2002/0059049 | A1 | 5/2002 | Bradbury et al. |
| 2002/0062127 | A1 | 5/2002 | Schumacher et al. |
| 2002/0077540 | A1 | 6/2002 | Kienzle, III |
| 2002/0082741 | A1 | 6/2002 | Mazumder et al. |
| 2002/0087274 | A1 | 7/2002 | Alexander et al. |
| 2002/0092532 | A1 | 7/2002 | Yoon |
| 2002/0107522 | A1 | 8/2002 | Picard et al. |
| 2002/0107523 | A1 | 8/2002 | Naughton et al. |
| 2002/0116023 | A1 | 8/2002 | Fletcher et al. |
| 2002/0120342 | A1 | 8/2002 | Gibbs |
| 2002/0128872 | A1 | 9/2002 | Giammattei |
| 2002/0147415 | A1 | 10/2002 | Martelli |
| 2002/0173797 | A1 | 11/2002 | Van Zile et al. |
| 2002/0186818 | A1 | 12/2002 | Arnaud et al. |
| 2002/0193797 | A1 | 12/2002 | Johnson et al. |
| 2002/0198528 | A1 | 12/2002 | Engh et al. |
| 2002/0198529 | A1 | 12/2002 | Masini |
| 2002/0198531 | A1 | 12/2002 | Millard et al. |
| 2003/0009171 | A1 | 1/2003 | Tornier |
| 2003/0009234 | A1 | 1/2003 | Treacy et al. |
| 2003/0011624 | A1 | 1/2003 | Ellis |
| 2003/0018338 | A1 | 1/2003 | Stuart, Jr. et al. |
| 2003/0028196 | A1 | 2/2003 | Bonutti |
| 2003/0039676 | A1 | 2/2003 | Boyce et al. |
| 2003/0055502 | A1 | 3/2003 | Lang et al. |
| 2003/0060831 | A1 | 3/2003 | Bonutti |
| 2003/0069897 | A1 | 4/2003 | Roy et al. |
| 2003/0074800 | A1 | 4/2003 | Huang |
| 2003/0100906 | A1 | 5/2003 | Rosa et al. |
| 2003/0100907 | A1 | 5/2003 | Rosa et al. |
| 2003/0105526 | A1 | 6/2003 | Bryant et al. |
| 2003/0109784 | A1 | 6/2003 | Loh et al. |
| 2003/0120276 | A1 | 6/2003 | Tallarida et al. |
| 2003/0130665 | A1 | 7/2003 | Pinczewski et al. |
| 2003/0130741 | A1 | 7/2003 | McMinn |
| 2003/0139817 | A1 | 7/2003 | Tuke et al. |
| 2003/0153829 | A1 | 8/2003 | Sarin et al. |
| 2003/0158606 | A1 | 8/2003 | Coon et al. |
| 2003/0171757 | A1 | 9/2003 | Coon et al. |
| 2003/0181987 | A1 | 9/2003 | Muirhead-allwood |
| 2003/0212403 | A1 | 11/2003 | Swanson |
| 2003/0212459 | A1 | 11/2003 | Gibbs |
| 2003/0216669 | A1 | 11/2003 | Lang et al. |
| 2003/0216741 | A1 | 11/2003 | Sanford et al. |
| 2003/0220641 | A1 | 11/2003 | Thelen et al. |
| 2003/0225413 | A1 | 12/2003 | Sanford et al. |
| 2004/0018144 | A1 | 1/2004 | Briscoe |
| 2004/0021660 | A1 | 2/2004 | Ng-thow-hing et al. |
| 2004/0030245 | A1 | 2/2004 | Noble et al. |
| 2004/0034302 | A1 | 2/2004 | Abovitz et al. |
| 2004/0039395 | A1 | 2/2004 | Coon et al. |
| 2004/0044295 | A1 | 3/2004 | Reinert et al. |
| 2004/0054372 | A1 | 3/2004 | Corden et al. |
| 2004/0054416 | A1 | 3/2004 | Wyss et al. |
| 2004/0068187 | A1 | 4/2004 | Krause et al. |
| 2004/0092932 | A1 | 5/2004 | Aubin et al. |
| 2004/0097952 | A1 | 5/2004 | Sarin et al. |
| 2004/0098133 | A1 | 5/2004 | Carignan et al. |
| 2004/0102785 | A1 | 5/2004 | Hodorek et al. |
| 2004/0102792 | A1 | 5/2004 | Sarin et al. |
| 2004/0102852 | A1 | 5/2004 | Johnson et al. |
| 2004/0102866 | A1 | 5/2004 | Harris et al. |
| 2004/0106926 | A1 | 6/2004 | Leitner et al. |
| 2004/0115586 | A1 | 6/2004 | Andreiko et al. |
| 2004/0117026 | A1 | 6/2004 | Tuma et al. |
| 2004/0118229 | A1 | 6/2004 | Reynolds et al. |
| 2004/0122436 | A1 | 6/2004 | Grimm |
| 2004/0122439 | A1 | 6/2004 | Dwyer et al. |
| 2004/0128026 | A1 | 7/2004 | Harris et al. |
| 2004/0133276 | A1 | 7/2004 | Lang et al. |
| 2004/0138670 | A1 | 7/2004 | Metzger |
| 2004/0138754 | A1 | 7/2004 | Lang et al. |
| 2004/0143336 | A1 | 7/2004 | Burkinshaw |
| 2004/0147927 | A1 | 7/2004 | Tsougarakis et al. |
| 2004/0148026 | A1 | 7/2004 | Bonutti |
| 2004/0153079 | A1 | 8/2004 | Tsougarakis et al. |
| 2004/0153087 | A1 | 8/2004 | Sanford et al. |
| 2004/0158254 | A1 | 8/2004 | Eisermann |

(56) **References Cited**

U.S. PATENT DOCUMENTS

2004/0162619 A1 8/2004 Blaylock et al.
2004/0167390 A1 8/2004 Alexander et al.
2004/0171924 A1 9/2004 Mire et al.
2004/0172137 A1 9/2004 Blaylock et al.
2004/0181144 A1 9/2004 Cinquin et al.
2004/0193169 A1 9/2004 Schon et al.
2004/0204644 A1 10/2004 Tsougarakis et al.
2004/0204760 A1 10/2004 Fitz et al.
2004/0212586 A1 10/2004 Trueman, III
2004/0220583 A1 11/2004 Pieczynski, II et al.
2004/0225369 A1 11/2004 Lakin et al.
2004/0230199 A1 11/2004 Jansen et al.
2004/0236341 A1 11/2004 Petersen
2004/0236424 A1 11/2004 Berez et al.
2004/0243148 A1 12/2004 Wasielewski
2004/0243481 A1 12/2004 Bradbury et al.
2004/0249386 A1 12/2004 Faoro
2004/0254584 A1 12/2004 Sarin et al.
2004/0260301 A1 12/2004 Lionberger et al.
2005/0008887 A1 1/2005 Haymann et al.
2005/0009952 A1 1/2005 Qian et al.
2005/0010227 A1 1/2005 Paul
2005/0010300 A1 1/2005 Disilvestro et al.
2005/0015022 A1 1/2005 Richard et al.
2005/0015599 A1 1/2005 Wang et al.
2005/0015603 A1 1/2005 Cabezas et al.
2005/0015604 A1 1/2005 Sundararajan et al.
2005/0015605 A1 1/2005 Lin et al.
2005/0019664 A1 1/2005 Matsumoto
2005/0021044 A1 1/2005 Stone et al.
2005/0021148 A1 1/2005 Gibbs
2005/0021299 A1 1/2005 Kadota et al.
2005/0021494 A1 1/2005 Wilkinson
2005/0027303 A1 2/2005 Lionberger et al.
2005/0027361 A1 2/2005 Reiley
2005/0043806 A1 2/2005 Cook et al.
2005/0043837 A1 2/2005 Rubbert et al.
2005/0049524 A1 3/2005 Lefevre et al.
2005/0049603 A1 3/2005 Calton et al.
2005/0059873 A1 3/2005 Glozman et al.
2005/0060040 A1 3/2005 Auxepaules et al.
2005/0065617 A1 3/2005 Moctezuma De La Barrera et al.
2005/0065628 A1 3/2005 Roose
2005/0070897 A1 3/2005 Petersen
2005/0071015 A1 3/2005 Sekel
2005/0075641 A1 4/2005 Singhatat et al.
2005/0096535 A1 5/2005 De La Barrera
2005/0109855 A1 5/2005 Mccombs
2005/0113659 A1 5/2005 Pothier et al.
2005/0113840 A1 5/2005 Metzger et al.
2005/0113841 A1 5/2005 Sheldon et al.
2005/0113846 A1 5/2005 Carson
2005/0119664 A1 6/2005 Carignan et al.
2005/0131662 A1 6/2005 Ascenzi et al.
2005/0137708 A1 6/2005 Clark
2005/0143828 A1 6/2005 Collins et al.
2005/0148843 A1 7/2005 Roose
2005/0149042 A1 7/2005 Metzger
2005/0171545 A1 8/2005 Walsh et al.
2005/0177170 A1 8/2005 Fisher et al.
2005/0177245 A1 8/2005 Leatherbury et al.
2005/0203384 A1 9/2005 Sati et al.
2005/0203536 A1 9/2005 Laffargue et al.
2005/0203540 A1 9/2005 Broyles
2005/0209597 A1 9/2005 Long et al.
2005/0209605 A1 9/2005 Grimm et al.
2005/0216305 A1 9/2005 Funderud
2005/0222571 A1 10/2005 Ryan
2005/0222573 A1 10/2005 Branch et al.
2005/0228393 A1 10/2005 Williams, III et al.
2005/0234332 A1 10/2005 Murphy
2005/0234461 A1 10/2005 Burdulis, Jr. et al.
2005/0234465 A1 10/2005 Mccombs et al.
2005/0234468 A1 10/2005 Carson
2005/0240195 A1 10/2005 Axelson, Jr. et al.
2005/0240267 A1 10/2005 Randall et al.
2005/0244239 A1 11/2005 Shimp
2005/0245808 A1 11/2005 Carson
2005/0245934 A1 11/2005 Tuke et al.
2005/0245936 A1 11/2005 Tuke et al.
2005/0251026 A1 11/2005 Stone
2005/0251147 A1 11/2005 Novak
2005/0267353 A1 12/2005 Marquart et al.
2005/0267485 A1 12/2005 Cordes et al.
2005/0267584 A1 12/2005 Burdulis, Jr. et al.
2005/0273114 A1 12/2005 Novak
2005/0283252 A1 12/2005 Coon et al.
2005/0283253 A1 12/2005 Coon et al.
2006/0004284 A1 1/2006 Grunschlager et al.
2006/0015120 A1 1/2006 Richard et al.
2006/0025778 A1 2/2006 Ferree
2006/0030853 A1 2/2006 Haines
2006/0038520 A1 2/2006 Negoro
2006/0052725 A1 3/2006 Santilli
2006/0058803 A1 3/2006 Cuckler et al.
2006/0058809 A1 3/2006 Zink et al.
2006/0058884 A1 3/2006 Aram et al.
2006/0058886 A1 3/2006 Wozencroft
2006/0069444 A1 3/2006 Deffenbaugh
2006/0089621 A1 4/2006 Fard
2006/0093988 A1 5/2006 Swaelens et al.
2006/0094951 A1 5/2006 Dean et al.
2006/0094958 A1 5/2006 Marquart et al.
2006/0095044 A1 5/2006 Grady, Jr. et al.
2006/0095047 A1 5/2006 De La Barrera
2006/0095049 A1 5/2006 Zannis et al.
2006/0100832 A1 5/2006 Bowman
2006/0105011 A1 5/2006 Sun et al.
2006/0111722 A1 5/2006 Bouadi
2006/0122491 A1 6/2006 Murray et al.
2006/0122616 A1 6/2006 Bennett et al.
2006/0122618 A1 6/2006 Claypool et al.
2006/0136058 A1 6/2006 Pietrzak
2006/0142657 A1 6/2006 Quaid et al.
2006/0142774 A1 6/2006 Metzger
2006/0142778 A1 6/2006 Dees
2006/0147332 A1 7/2006 Jones et al.
2006/0149283 A1 7/2006 May et al.
2006/0155380 A1 7/2006 Clemow et al.
2006/0161165 A1 7/2006 Swanson et al.
2006/0161167 A1 7/2006 Myers et al.
2006/0172263 A1 8/2006 Quadling et al.
2006/0178497 A1 8/2006 Gevaert et al.
2006/0184177 A1 8/2006 Echeverri
2006/0184250 A1 8/2006 Bandoh et al.
2006/0190086 A1 8/2006 Clemow et al.
2006/0192319 A1 8/2006 Solar
2006/0195111 A1 8/2006 Couture
2006/0195194 A1 8/2006 Gunther
2006/0195198 A1 8/2006 James
2006/0198943 A1 9/2006 Kumar
2006/0200158 A1 9/2006 Farling et al.
2006/0204932 A1 9/2006 Haymann et al.
2006/0210644 A1 9/2006 Levin
2006/0217808 A1 9/2006 Novak
2006/0235421 A1 10/2006 Rosa et al.
2006/0241635 A1 10/2006 Stumpo et al.
2006/0241636 A1 10/2006 Novak et al.
2006/0241775 A1 10/2006 Buss
2006/0241776 A1 10/2006 Brown et al.
2006/0241781 A1 10/2006 Brown et al.
2006/0271058 A1 11/2006 Ashton et al.
2006/0276796 A1 12/2006 Creger et al.
2006/0276797 A1 12/2006 Botimer
2006/0287733 A1 12/2006 Bonutti
2006/0287891 A1 12/2006 Grasso et al.
2006/0293681 A1 12/2006 Claypool et al.
2007/0015995 A1 1/2007 Lang et al.
2007/0016008 A1 1/2007 Schoenefeld
2007/0016209 A1 1/2007 Ammann et al.
2007/0027680 A1 2/2007 Ashley et al.
2007/0039205 A1 2/2007 Erb et al.
2007/0043582 A1 2/2007 Peveto et al.
2007/0066917 A1 3/2007 Hodorek et al.

(56) **References Cited**

U.S. PATENT DOCUMENTS

2007/0073133 A1 3/2007 Schoenefeld
2007/0073136 A1 3/2007 Metzger
2007/0073137 A1 3/2007 Schoenefeld
2007/0083209 A1 4/2007 Schenberger et al.
2007/0083214 A1 4/2007 Duncan et al.
2007/0083266 A1 4/2007 Lang
2007/0100258 A1 5/2007 Shoham et al.
2007/0100450 A1 5/2007 Hodorek
2007/0100462 A1 5/2007 Lang et al.
2007/0106299 A1 5/2007 Manspeizer
2007/0106391 A1 5/2007 Ronk
2007/0118055 A1 5/2007 Mccombs
2007/0118138 A1 5/2007 Seo et al.
2007/0118243 A1 5/2007 Schroeder et al.
2007/0129809 A1 6/2007 Meridew et al.
2007/0142914 A1 6/2007 Jones et al.
2007/0149981 A1 6/2007 Bhattacharyya
2007/0150068 A1 6/2007 Dong et al.
2007/0156066 A1 7/2007 Mcginley et al.
2007/0156171 A1 7/2007 Lang et al.
2007/0162038 A1 7/2007 Tuke
2007/0162039 A1 7/2007 Wozencroft
2007/0173946 A1 7/2007 Bonutti
2007/0173948 A1 7/2007 Meridew et al.
2007/0179739 A1 8/2007 Donofrio et al.
2007/0185498 A2 8/2007 Lavallee
2007/0191962 A1 8/2007 Jones
2007/0198022 A1 8/2007 Lang et al.
2007/0203430 A1 8/2007 Lang et al.
2007/0203583 A1 8/2007 Slone
2007/0203605 A1 8/2007 Melton et al.
2007/0219562 A1 9/2007 Slone et al.
2007/0219639 A1 9/2007 Otto et al.
2007/0219640 A1 9/2007 Steinberg
2007/0224238 A1 9/2007 Mansmann et al.
2007/0225719 A1 9/2007 Stone et al.
2007/0226986 A1 10/2007 Park et al.
2007/0233121 A1 10/2007 Carson et al.
2007/0233136 A1 10/2007 Wozencroft
2007/0233140 A1 10/2007 Metzger et al.
2007/0233141 A1 10/2007 Park et al.
2007/0233269 A1 10/2007 Steines et al.
2007/0233272 A1 10/2007 Boyce et al.
2007/0238069 A1 10/2007 Lovald et al.
2007/0239282 A1 10/2007 Caylor, III et al.
2007/0239481 A1 10/2007 Disilvestro et al.
2007/0244457 A1 10/2007 Fangrow
2007/0244487 A1 10/2007 Ammann et al.
2007/0250169 A1 10/2007 Lang
2007/0250175 A1 10/2007 Meridew et al.
2007/0253617 A1 11/2007 Arata et al.
2007/0255030 A1 11/2007 Sakamoto et al.
2007/0255255 A1 11/2007 Shah et al.
2007/0255288 A1 11/2007 Mahfouz et al.
2007/0255412 A1 11/2007 Hajaj et al.
2007/0262567 A1 11/2007 Benson
2007/0262867 A1 11/2007 Westrick et al.
2007/0270680 A1 11/2007 Sheffer et al.
2007/0272747 A1 11/2007 Woods et al.
2007/0276224 A1 11/2007 Lang et al.
2007/0276400 A1 11/2007 Moore et al.
2007/0276501 A1 11/2007 Betz et al.
2007/0282451 A1 12/2007 Metzger et al.
2007/0288029 A1 12/2007 Justin et al.
2007/0288030 A1 12/2007 Metzger et al.
2008/0009874 A1 1/2008 Meridew et al.
2008/0009952 A1 1/2008 Hodge
2008/0015599 A1 1/2008 D'alessio et al.
2008/0015603 A1 1/2008 Collazo
2008/0015604 A1 1/2008 Collazo
2008/0015605 A1 1/2008 Collazo
2008/0015607 A1 1/2008 D'Alessio et al.
2008/0021299 A1 1/2008 Meulink
2008/0021494 A1 1/2008 Schmelzeisen-redeker et al.
2008/0021567 A1 1/2008 Meulink et al.
2008/0027563 A1 1/2008 Johnson et al.
2008/0033442 A1 2/2008 Amiot et al.
2008/0039850 A1 2/2008 Rowley et al.
2008/0051799 A1 2/2008 Bonutti et al.
2008/0051910 A1 2/2008 Kammerzell et al.
2008/0058945 A1 3/2008 Hajaj et al.
2008/0058947 A1 3/2008 Earl et al.
2008/0062183 A1 3/2008 Swaelens
2008/0065225 A1 3/2008 Wasielewski et al.
2008/0094396 A1 4/2008 Sabczynsdi et al.
2008/0097451 A1 4/2008 Chen et al.
2008/0114370 A1 5/2008 Schoenefeld
2008/0133016 A1 6/2008 Heinz
2008/0133022 A1 6/2008 Caylor
2008/0140081 A1 6/2008 Heavener et al.
2008/0140209 A1 6/2008 Iannotti et al.
2008/0140213 A1 6/2008 Ammann et al.
2008/0146969 A1 6/2008 Kurtz
2008/0147072 A1 6/2008 Park et al.
2008/0147073 A1 6/2008 Ammann et al.
2008/0147074 A1 6/2008 Ammann et al.
2008/0161815 A1 7/2008 Schoenefeld et al.
2008/0161816 A1 7/2008 Stevens et al.
2008/0172125 A1 7/2008 Ek
2008/0195099 A1 8/2008 Minas
2008/0195107 A1 8/2008 Cuckler et al.
2008/0195108 A1 8/2008 Bhatnagar et al.
2008/0195109 A1 8/2008 Hunter et al.
2008/0195216 A1 8/2008 Philipp
2008/0200926 A1 8/2008 Verard et al.
2008/0208200 A1 8/2008 Crofford
2008/0208353 A1 8/2008 Kumar et al.
2008/0215059 A1 9/2008 Carignan et al.
2008/0221699 A1 9/2008 Meridew et al.
2008/0230422 A1 9/2008 Pleil et al.
2008/0234664 A1 9/2008 May et al.
2008/0234683 A1 9/2008 May
2008/0234685 A1 9/2008 Gjerde
2008/0234833 A1 9/2008 Bandoh et al.
2008/0243127 A1 10/2008 Lang et al.
2008/0249395 A1 10/2008 Shachar et al.
2008/0255674 A1 10/2008 Rahaman et al.
2008/0257363 A1 10/2008 Schoenefeld et al.
2008/0262499 A1 10/2008 Giori et al.
2008/0262500 A1 10/2008 Collazo
2008/0262624 A1 10/2008 White et al.
2008/0269596 A1 10/2008 Revie et al.
2008/0269906 A1 10/2008 Iannotti et al.
2008/0275452 A1 11/2008 Lang et al.
2008/0281328 A1 11/2008 Lang et al.
2008/0281329 A1 11/2008 Fitz et al.
2008/0281426 A1 11/2008 Fitz et al.
2008/0287926 A1 11/2008 Abou El Kheir
2008/0287954 A1 11/2008 Kunz et al.
2008/0287959 A1 11/2008 Quest et al.
2008/0294170 A1 11/2008 O'brien
2008/0294266 A1 11/2008 Steinberg
2008/0300600 A1 12/2008 Guelat et al.
2008/0306485 A1 12/2008 Coon et al.
2008/0306558 A1 12/2008 Hakki
2008/0312659 A1 12/2008 Metzger et al.
2008/0312746 A1 12/2008 Unger
2008/0319448 A1 12/2008 Lavallee et al.
2009/0012526 A1 1/2009 Fletcher
2009/0018546 A1 1/2009 Daley
2009/0018666 A1 1/2009 Grundei et al.
2009/0022015 A1 1/2009 Harrison
2009/0024131 A1 1/2009 Metzger et al.
2009/0024169 A1 1/2009 Triplett et al.
2009/0043556 A1 2/2009 Axelson et al.
2009/0048618 A1 2/2009 Harrison et al.
2009/0066936 A1 3/2009 Huang et al.
2009/0076371 A1 3/2009 Lang et al.
2009/0076512 A1 3/2009 Ammann et al.
2009/0076520 A1 3/2009 Choi
2009/0076555 A1 3/2009 Lowry et al.
2009/0082770 A1 3/2009 Worner et al.
2009/0082774 A1 3/2009 Oti et al.
2009/0087276 A1 4/2009 Rose

(56) **References Cited**

U.S. PATENT DOCUMENTS

2009/0088674 A1 4/2009 Caillouette et al.
2009/0088753 A1 4/2009 Aram et al.
2009/0088754 A1 4/2009 Aker et al.
2009/0088755 A1 4/2009 Aker et al.
2009/0088758 A1 4/2009 Bennett
2009/0088759 A1 4/2009 Aram et al.
2009/0088760 A1 4/2009 Aram et al.
2009/0088761 A1 4/2009 Roose et al.
2009/0088763 A1 4/2009 Aram et al.
2009/0088865 A1 4/2009 Brehm
2009/0088866 A1 4/2009 Case
2009/0089034 A1 4/2009 Penney et al.
2009/0089081 A1 4/2009 Haddad
2009/0093815 A1 4/2009 Fletcher et al.
2009/0093816 A1 4/2009 Roose et al.
2009/0096613 A1 4/2009 Westrick
2009/0099567 A1 4/2009 Zajac
2009/0099570 A1 4/2009 Paradis et al.
2009/0105837 A1 4/2009 Lafosse et al.
2009/0116621 A1 5/2009 Yuan et al.
2009/0118736 A1 5/2009 Kreuzer
2009/0118769 A1 5/2009 Sixto, Jr. et al.
2009/0129067 A1 5/2009 Fan et al.
2009/0131941 A1 5/2009 Park et al.
2009/0131942 A1 5/2009 Aker et al.
2009/0138019 A1 5/2009 Wasielewski
2009/0138020 A1 5/2009 Park et al.
2009/0149964 A1 6/2009 May et al.
2009/0149965 A1 6/2009 Quaid
2009/0149977 A1 6/2009 Schendel
2009/0151736 A1 6/2009 Belcher et al.
2009/0157083 A1 6/2009 Park et al.
2009/0163922 A1 6/2009 Meridew et al.
2009/0163923 A1 6/2009 Flett et al.
2009/0164024 A1 6/2009 Rudan et al.
2009/0177282 A1 7/2009 Bureau et al.
2009/0187193 A1 7/2009 Maroney et al.
2009/0204225 A1 8/2009 Meridew et al.
2009/0209884 A1 8/2009 Van Vorhis et al.
2009/0209961 A1 8/2009 Ferrante et al.
2009/0210067 A1 8/2009 Meridew
2009/0222014 A1 9/2009 Bojarski et al.
2009/0222015 A1 9/2009 Park et al.
2009/0222016 A1 9/2009 Park et al.
2009/0222103 A1 9/2009 Fitz et al.
2009/0226068 A1 9/2009 Fitz et al.
2009/0228016 A1 9/2009 Alvarez
2009/0234217 A1 9/2009 Mire et al.
2009/0234302 A1 9/2009 Hoendervoogt et al.
2009/0234360 A1 9/2009 Alexander
2009/0248044 A1 10/2009 Amiot et al.
2009/0250413 A1 10/2009 Hoeppner
2009/0254093 A1 10/2009 White et al.
2009/0254367 A1 10/2009 Belcher et al.
2009/0259312 A1 10/2009 Shterling et al.
2009/0270868 A1 10/2009 Park et al.
2009/0274350 A1 11/2009 Pavlovskaia et al.
2009/0287217 A1 11/2009 Ammann et al.
2009/0287309 A1 11/2009 Walch et al.
2009/0306676 A1 12/2009 Lang et al.
2009/0307893 A1 12/2009 Burdulis, Jr. et al.
2009/0318836 A1 12/2009 Stone et al.
2009/0318921 A1 12/2009 White et al.
2009/0318930 A1 12/2009 Stone et al.
2009/0318931 A1 12/2009 Stone et al.
2010/0010493 A1 1/2010 Dower
2010/0015082 A1 1/2010 Ting-jenulis et al.
2010/0016705 A1 1/2010 Stone et al.
2010/0016984 A1 1/2010 Trabish
2010/0016986 A1 1/2010 Trabish
2010/0023015 A1 1/2010 Park
2010/0030231 A1 2/2010 Revie et al.
2010/0036404 A1 2/2010 Yi et al.
2010/0042105 A1 2/2010 Park et al.
2010/0049195 A1 2/2010 Park et al.
2010/0049327 A1 2/2010 Isch et al.
2010/0057088 A1 3/2010 Shah
2010/0076439 A1 3/2010 Hatch
2010/0076505 A1 3/2010 Borja
2010/0076563 A1 3/2010 Otto et al.
2010/0076571 A1 3/2010 Hatch
2010/0082034 A1 4/2010 Remia
2010/0082035 A1 4/2010 Keefer
2010/0082067 A1 4/2010 Kondrashov
2010/0087829 A1 4/2010 Metzger
2010/0094295 A1 4/2010 Schnieders et al.
2010/0099977 A1 4/2010 Hershberger
2010/0100011 A1 4/2010 Roche
2010/0105011 A1 4/2010 Karkar et al.
2010/0121334 A1 5/2010 Couture et al.
2010/0121335 A1 5/2010 Penenberg et al.
2010/0131073 A1 5/2010 Meridew et al.
2010/0136214 A1 6/2010 Kumar
2010/0137869 A1 6/2010 Borja et al.
2010/0137871 A1 6/2010 Borja
2010/0137924 A1 6/2010 Tuke et al.
2010/0139377 A1 6/2010 Huang et al.
2010/0145343 A1 6/2010 Johnson et al.
2010/0145344 A1 6/2010 Jordan et al.
2010/0145466 A1 6/2010 Slone
2010/0152782 A1 6/2010 Stone et al.
2010/0160917 A1 6/2010 Fitz et al.
2010/0160919 A1 6/2010 Axelson, Jr. et al.
2010/0168752 A1 7/2010 Edwards
2010/0168754 A1 7/2010 Fitz et al.
2010/0168857 A1 7/2010 Hatch
2010/0168866 A1 7/2010 Shih
2010/0179663 A1 7/2010 Steinberg
2010/0185202 A1 7/2010 Lester et al.
2010/0191244 A1 7/2010 White et al.
2010/0198067 A1 8/2010 Mahfouz et al.
2010/0198224 A1 8/2010 Metzger
2010/0212138 A1 8/2010 Carroll et al.
2010/0217109 A1 8/2010 Belcher
2010/0217270 A1 8/2010 Polinski et al.
2010/0217336 A1 8/2010 Crawford et al.
2010/0217338 A1 8/2010 Carroll et al.
2010/0217399 A1 8/2010 Groh
2010/0228257 A1 9/2010 Bonutti
2010/0249657 A1 9/2010 Nycz et al.
2010/0249796 A1 9/2010 Nycz
2010/0256649 A1 10/2010 Capsal et al.
2010/0262150 A1 10/2010 Lian
2010/0274253 A1 10/2010 Ure
2010/0281678 A1 11/2010 Burdulis, Jr. et al.
2010/0286700 A1 11/2010 Snider et al.
2010/0286789 A1 11/2010 Meridew
2010/0291401 A1 11/2010 Medina et al.
2010/0292743 A1 11/2010 Singhal et al.
2010/0298894 A1 11/2010 Bojarski et al.
2010/0305574 A1 12/2010 Fitz et al.
2010/0318088 A1 12/2010 Warne et al.
2010/0324692 A1 12/2010 Uthgenannt et al.
2011/0004317 A1 1/2011 Hacking et al.
2011/0008754 A1 1/2011 Bassett et al.
2011/0009869 A1 1/2011 Marino et al.
2011/0014081 A1 1/2011 Jones et al.
2011/0015636 A1 1/2011 Katrana et al.
2011/0015637 A1 1/2011 De Smedt et al.
2011/0015639 A1 1/2011 Metzger et al.
2011/0015752 A1 1/2011 Meridew
2011/0015753 A1 1/2011 Meridew
2011/0016690 A1 1/2011 Narainasamy et al.
2011/0022049 A1 1/2011 Huebner et al.
2011/0022174 A1 1/2011 Holdstein et al.
2011/0029088 A1 2/2011 Rauscher et al.
2011/0029091 A1 2/2011 Bojarski et al.
2011/0029093 A1 2/2011 Bojarski
2011/0029116 A1 2/2011 Jordan et al.
2011/0035012 A1 2/2011 Linares
2011/0040303 A1 2/2011 Iannotti et al.
2011/0040334 A1 2/2011 Kaes et al.
2011/0046735 A1 2/2011 Metzger et al.
2011/0054478 A1 3/2011 Vanasse et al.

(56) **References Cited**

U.S. PATENT DOCUMENTS

2011/0060339 A1 3/2011 De Wekker
2011/0066193 A1 3/2011 Lang et al.
2011/0066245 A1 3/2011 Lang et al.
2011/0071528 A1 3/2011 Carson
2011/0071529 A1 3/2011 Carson
2011/0071530 A1 3/2011 Carson
2011/0071532 A1 3/2011 Carson
2011/0071533 A1 3/2011 Metzger et al.
2011/0071581 A1 3/2011 Lang et al.
2011/0071802 A1 3/2011 Bojarski et al.
2011/0087332 A1 4/2011 Bojarski et al.
2011/0092804 A1 4/2011 Schoenefeld et al.
2011/0093086 A1 4/2011 Witt et al.
2011/0106093 A1 5/2011 Romano et al.
2011/0106254 A1 5/2011 Abel et al.
2011/0125264 A1 5/2011 Bagga et al.
2011/0125284 A1 5/2011 Gabbrielli et al.
2011/0130795 A1 6/2011 Ball
2011/0151027 A1 6/2011 Clineff et al.
2011/0151259 A1 6/2011 Jarman-smith et al.
2011/0153025 A1 6/2011 Mcminn
2011/0160736 A1 6/2011 Meridew et al.
2011/0160867 A1 6/2011 Meridew et al.
2011/0166578 A1 7/2011 Stone et al.
2011/0172672 A1 7/2011 Dubeau et al.
2011/0177590 A1 7/2011 Clyne et al.
2011/0184419 A1 7/2011 Meridew et al.
2011/0184424 A1 7/2011 Isch et al.
2011/0184526 A1 7/2011 White et al.
2011/0190899 A1 8/2011 Pierce et al.
2011/0190901 A1 8/2011 Weissberg et al.
2011/0213376 A1 9/2011 Maxson et al.
2011/0214279 A1 9/2011 Park et al.
2011/0218545 A1 9/2011 Catanzarite et al.
2011/0224674 A1 9/2011 White et al.
2011/0238071 A1 9/2011 Fernandez-scoma
2011/0245835 A1 10/2011 Dodds et al.
2011/0251617 A1 10/2011 Ammann et al.
2011/0257657 A1 10/2011 Turner et al.
2011/0269100 A1 11/2011 Furrer et al.
2011/0275032 A1 11/2011 Tardieu et al.
2011/0276053 A1 11/2011 Birkbeck et al.
2011/0276145 A1 11/2011 Carignan et al.
2011/0282473 A1 11/2011 Pavlovskaia et al.
2011/0295887 A1 12/2011 Palmese et al.
2011/0313424 A1 12/2011 Bono et al.
2011/0319745 A1 12/2011 Frey
2012/0010619 A1 1/2012 Barsoum
2012/0010710 A1 1/2012 Frigg
2012/0010711 A1 1/2012 Antonyshyn et al.
2012/0029345 A1 2/2012 Mahfouz et al.
2012/0029520 A1 2/2012 Lang et al.
2012/0041445 A1 2/2012 Roose et al.
2012/0041446 A1 2/2012 Wong et al.
2012/0041564 A1 2/2012 Landon
2012/0053590 A1 3/2012 Allen et al.
2012/0063655 A1 3/2012 Dean et al.
2012/0065640 A1 3/2012 Metzger et al.
2012/0078254 A1 3/2012 Ashby et al.
2012/0078258 A1 3/2012 Lo et al.
2012/0078259 A1 3/2012 Meridew
2012/0089595 A1 4/2012 Jaecksch
2012/0101586 A1 4/2012 Carson
2012/0109137 A1 5/2012 Lannotti et al.
2012/0109138 A1 5/2012 Meridew et al.
2012/0109226 A1 5/2012 Iannotti et al.
2012/0116203 A1 5/2012 Vancraen et al.
2012/0123422 A1 5/2012 Agnihotri et al.
2012/0123423 A1 5/2012 Fryman
2012/0130382 A1 5/2012 Iannotti et al.
2012/0136365 A1 5/2012 Iannotti et al.
2012/0141034 A1 6/2012 Iannotti et al.
2012/0143197 A1 6/2012 Lang et al.
2012/0143267 A1 6/2012 Lannotti et al.
2012/0150242 A1 6/2012 Mannion
2012/0158002 A1 6/2012 Carignan et al.
2012/0165954 A1 6/2012 Nimal
2012/0190971 A1 7/2012 De Wekker
2012/0192401 A1 8/2012 Pavlovskaia et al.
2012/0196314 A1 8/2012 Nawaz et al.
2012/0209276 A1 8/2012 Schuster
2012/0215225 A1 8/2012 Philippon et al.
2012/0215310 A1 8/2012 Sharp et al.
2012/0221017 A1 8/2012 Bonutti
2012/0226283 A1 9/2012 Meridew et al.
2012/0232596 A1 9/2012 Ribeiro
2012/0245587 A1 9/2012 Fang et al.
2012/0245647 A1 9/2012 Kunz et al.
2012/0259335 A1 10/2012 Scifert et al.
2012/0265208 A1 10/2012 Smith
2012/0271131 A1 10/2012 Kling et al.
2012/0271314 A1 10/2012 Stemniski et al.
2012/0271366 A1 10/2012 Katrana et al.
2012/0276509 A1 11/2012 Iannotti et al.
2012/0277751 A1 11/2012 Catanzarite et al.
2012/0289965 A1 11/2012 Gelaude et al.
2012/0296339 A1 11/2012 Iannotti et al.
2012/0303004 A1 11/2012 Uthgenannt et al.
2012/0303033 A1 11/2012 Weiner et al.
2012/0310364 A1 12/2012 Li et al.
2012/0310399 A1 12/2012 Metzger
2012/0316564 A1 12/2012 Serbousek et al.
2012/0323246 A1 12/2012 Catanzarite et al.
2012/0323282 A1 12/2012 Brianza et al.
2012/0323323 A1 12/2012 Vargas et al.
2012/0330319 A1 12/2012 Birkbeck et al.
2013/0001121 A1 1/2013 Metzger
2013/0006250 A1 1/2013 Metzger et al.
2013/0018483 A1 1/2013 Li et al.
2013/0035766 A1 2/2013 Meridew
2013/0046310 A1 2/2013 Ranawat et al.
2013/0053854 A1 2/2013 Schoenefeld et al.
2013/0056912 A1 3/2013 O'neill et al.
2013/0060253 A1 3/2013 Couture et al.
2013/0066323 A1 3/2013 Nycz et al.
2013/0072940 A1 3/2013 Dawood et al.
2013/0085500 A1 4/2013 Meridew et al.
2013/0085590 A1 4/2013 Bryan et al.
2013/0110116 A1 5/2013 Kehres et al.
2013/0110470 A1 5/2013 Vanasse et al.
2013/0116699 A1 5/2013 Smith et al.
2013/0119579 A1 5/2013 Iannotti et al.
2013/0123850 A1 5/2013 Schoenefeld et al.
2013/0131681 A1 5/2013 Katrana et al.
2013/0144392 A1 6/2013 Hughes
2013/0158671 A1 6/2013 Uthgenannt et al.
2013/0197528 A1 8/2013 Zakaria et al.
2013/0197529 A1 8/2013 Metzger
2013/0197687 A1 8/2013 Pavlovskaia et al.
2013/0218163 A1 8/2013 Frey
2013/0245631 A1 9/2013 Bettenga
2013/0245801 A1 9/2013 Schroeder
2013/0261503 A1 10/2013 Sherman
2013/0264749 A1 10/2013 Jones et al.
2013/0268085 A1 10/2013 Dong
2013/0289730 A1 10/2013 Gabriel et al.
2013/0292870 A1 11/2013 Roger
2013/0317511 A1 11/2013 Bojarski et al.
2013/0317621 A1 11/2013 Metzger et al.
2013/0326878 A1 12/2013 Boehm et al.
2013/0338673 A1 12/2013 Keppler
2014/0001226 A1 1/2014 Scabin et al.
2014/0005672 A1 1/2014 Edwards et al.
2014/0012266 A1 1/2014 Bonin, Jr. et al.
2014/0018934 A1 1/2014 Meridew et al.
2014/0052270 A1 2/2014 Witt et al.
2014/0066937 A1 3/2014 Wiebe, III et al.
2014/0081275 A1 3/2014 Metzger et al.
2014/0081659 A1 3/2014 Nawana et al.
2014/0088724 A1 3/2014 Meridew
2014/0094816 A1 4/2014 White et al.
2014/0100578 A1 4/2014 Metzger et al.
2014/0107651 A1 4/2014 Meridew et al.
2014/0107654 A1 4/2014 Kehres et al.

(56) **References Cited**

U.S. PATENT DOCUMENTS

| | | | |
|---|---|---|---|
| 2014/0107715 | A1 | 4/2014 | Heilman et al. |
| 2014/0127211 | A1 | 5/2014 | Geles et al. |
| 2014/0135775 | A1 | 5/2014 | Maxson |
| 2014/0163564 | A1 | 6/2014 | Bollinger |
| 2014/0163565 | A1 | 6/2014 | Bollinger |
| 2014/0172116 | A1 | 6/2014 | Maxson et al. |
| 2014/0188119 | A1 | 7/2014 | Catanzarite et al. |
| 2014/0222157 | A1 | 8/2014 | Al Hares et al. |
| 2014/0243833 | A1 | 8/2014 | Smith |
| 2014/0257304 | A1 | 9/2014 | Eash |
| 2014/0257508 | A1 | 9/2014 | Bojarski et al. |
| 2014/0276854 | A1 | 9/2014 | Schoenefeld et al. |
| 2014/0276856 | A1 | 9/2014 | Schoenefeld |
| 2014/0276870 | A1 | 9/2014 | Eash |
| 2014/0276873 | A1 | 9/2014 | Meridew et al. |
| 2014/0303938 | A1 | 10/2014 | Schoenefeld et al. |
| 2014/0303990 | A1 | 10/2014 | Schoenefeld et al. |
| 2014/0309644 | A1 | 10/2014 | Metzger et al. |
| 2014/0324058 | A1 | 10/2014 | Metzger et al. |
| 2014/0378979 | A1 | 12/2014 | Stone et al. |
| 2015/0088293 | A1 | 3/2015 | Metzger |
| 2015/0112348 | A1 | 4/2015 | Schoenefeld et al. |
| 2015/0112349 | A1 | 4/2015 | Schoenefeld |
| 2015/0150688 | A1 | 6/2015 | Vanasse et al. |
| 2015/0157341 | A1 | 6/2015 | Catanzarite et al. |
| 2015/0320429 | A1 | 11/2015 | Katrana et al. |
| 2015/0320508 | A1 | 11/2015 | White et al. |
| 2015/0335438 | A1 | 11/2015 | Pierce et al. |
| 2015/0351778 | A1 | 12/2015 | Uthgenannt et al. |
| 2016/0008013 | A1 | 1/2016 | Metzger et al. |
| 2016/0038160 | A1 | 2/2016 | Metzger |
| 2016/0100845 | A1 | 4/2016 | Smith et al. |
| 2016/0128706 | A1 | 5/2016 | Meridew |
| 2016/0135824 | A1 | 5/2016 | Vanasse et al. |
| 2016/0157751 | A1 | 6/2016 | Mahfouz |
| 2016/0196651 | A1 | 7/2016 | Dean et al. |
| 2016/0203241 | A1 | 7/2016 | Dean et al. |
| 2016/0213491 | A1 | 7/2016 | Schoenefeld et al. |
| 2016/0228133 | A1 | 8/2016 | Meridew et al. |
| 2016/0338838 | A1 | 11/2016 | Meridew et al. |
| 2017/0000626 | A1 | 1/2017 | White et al. |
| 2017/0056030 | A1 | 3/2017 | Metzger et al. |
| 2017/0076445 | A1 | 3/2017 | Hu |
| 2017/0224496 | A1 | 8/2017 | Witt et al. |
| 2017/0273718 | A1 | 9/2017 | Metzger et al. |
| 2017/0311846 | A1 | 11/2017 | Hershberger |
| 2017/0333194 | A1 | 11/2017 | Pierce et al. |
| 2018/0008292 | A1 | 1/2018 | Metzger et al. |
| 2018/0140426 | A1 | 5/2018 | Belcher et al. |
| 2018/0153565 | A1 | 6/2018 | Stone et al. |
| 2018/0168690 | A1 | 6/2018 | Uthgenannt et al. |
| 2018/0168822 | A1 | 6/2018 | White et al. |
| 2018/0199995 | A1 | 7/2018 | Odermatt et al. |
| 2018/0206888 | A1 | 7/2018 | Metzger et al. |
| 2018/0250135 | A1 | 9/2018 | White et al. |
| 2018/0256257 | A1 | 9/2018 | Luby |
| 2019/0167282 | A1 | 6/2019 | Metzger et al. |
| 2019/0223885 | A1 | 7/2019 | Meridew et al. |
| 2019/0336144 | A1 | 11/2019 | Vanasse et al. |
| 2020/0046518 | A1 | 2/2020 | Schoenefeld et al. |
| 2020/0054351 | A1 | 2/2020 | Meridew et al. |

FOREIGN PATENT DOCUMENTS

| | | | |
|---|---|---|---|
| CA | 2505371 | A1 | 5/2004 |
| CA | 2505419 | A1 | 6/2004 |
| CA | 2506849 | A1 | 6/2004 |
| CA | 2546958 | A1 | 6/2005 |
| CA | 2546965 | A1 | 6/2005 |
| CA | 2588907 | A1 | 6/2006 |
| CA | 2590534 | A1 | 6/2006 |
| CH | 117960 | A | 5/1927 |
| CN | 1630495 | A | 6/2005 |
| CN | 1728976 | A | 2/2006 |
| CN | 1729483 | A | 2/2006 |
| CN | 1729484 | A | 2/2006 |
| CN | 1913844 | A | 2/2007 |
| CN | 101111197 | A | 1/2008 |
| CN | 102038553 | A | 5/2011 |
| CN | 102335742 | A | 2/2012 |
| DE | 337437 | C | 5/1921 |
| DE | 3447365 | A1 | 7/1986 |
| DE | 04219939 | A1 | 12/1993 |
| DE | 4421153 | A1 | 12/1995 |
| DE | 10341187 | A1 | 3/2005 |
| DE | 10358926 | B4 | 9/2006 |
| DE | 102009028503 | A1 | 2/2011 |
| DE | 102010013258 | A1 | 6/2011 |
| DE | 102011082902 | A1 | 3/2012 |
| DE | 102012205820 | A1 | 10/2012 |
| DE | 112010003901 | T5 | 11/2012 |
| EP | 0114505 | A1 | 8/1984 |
| EP | 0255797 | A1 | 2/1988 |
| EP | 0326768 | A2 | 8/1989 |
| EP | 0579868 | A2 | 1/1994 |
| EP | 0591985 | A1 | 4/1994 |
| EP | 0645984 | A1 | 4/1995 |
| EP | 0650706 | A1 | 5/1995 |
| EP | 0916324 | A2 | 5/1999 |
| EP | 1321107 | A1 | 6/2003 |
| EP | 1327424 | A1 | 7/2003 |
| EP | 1437102 | A1 | 7/2004 |
| EP | 01486900 | A1 | 12/2004 |
| EP | 1563810 | A1 | 8/2005 |
| EP | 1574177 | A1 | 9/2005 |
| EP | 1588669 | A1 | 10/2005 |
| EP | 1634551 | A2 | 3/2006 |
| EP | 1832239 | A1 | 9/2007 |
| EP | 1852072 | A2 | 11/2007 |
| EP | 1852072 | A3 | 11/2007 |
| EP | 2029061 | A2 | 3/2009 |
| EP | 2168507 | A2 | 3/2010 |
| EP | 2303146 | A1 | 4/2011 |
| EP | 2303192 | A1 | 4/2011 |
| EP | 2352445 | A1 | 8/2011 |
| EP | 2396741 | A1 | 12/2011 |
| EP | 2398381 | A1 | 12/2011 |
| EP | 2403437 | A2 | 1/2012 |
| EP | 2491873 | A2 | 8/2012 |
| EP | 2502582 | A1 | 9/2012 |
| EP | 2709568 | A1 | 3/2014 |
| EP | 2816962 | A1 | 12/2014 |
| EP | 2029061 | B1 | 2/2017 |
| EP | 2303192 | B1 | 11/2018 |
| FR | 1111677 | A | 3/1956 |
| FR | 2429582 | A1 | 1/1980 |
| FR | 2659226 | A1 | 9/1991 |
| FR | 2721195 | A1 | 12/1995 |
| FR | 2768916 | A1 | 4/1999 |
| FR | 2979817 | A1 | 3/2013 |
| GB | 2094590 | A | 9/1982 |
| GB | 2197790 | A1 | 6/1988 |
| GB | 2423021 | A | 8/2006 |
| GB | 2442441 | A | 4/2008 |
| GB | 2447702 | A | 9/2008 |
| GB | 2483980 | A | 3/2012 |
| GB | 2486390 | A | 6/2012 |
| GB | 2490220 | A | 10/2012 |
| GB | 2491526 | A | 12/2012 |
| GB | 2486390 | B | 11/2015 |
| GB | 2527690 | B | 6/2016 |
| GB | 2483980 | B | 12/2016 |
| GB | 2491526 | B | 1/2017 |
| JP | 59157715 | A | 9/1984 |
| JP | 60231208 | A | 11/1985 |
| JP | 6233790 | A | 8/1994 |
| JP | 2000245758 | A | 9/2000 |
| JP | 2004008797 | A | 1/2004 |
| JP | 2005218861 | A | 8/2005 |
| JP | 2009514612 | A | 4/2009 |
| JP | 2009515610 | A | 4/2009 |
| JP | 2011505080 | A | 2/2011 |
| JP | 2011517996 | A | 6/2011 |
| JP | 2011527885 | A | 11/2011 |

(56) **References Cited**

FOREIGN PATENT DOCUMENTS

| | | | |
|---|---|---|---|
| JP | 5710014 | B2 | 4/2015 |
| KR | 20050072500 | A | 7/2005 |
| KR | 20050084024 | A | 8/2005 |
| RU | 2083179 | C1 | 7/1997 |
| RU | 2113182 | C1 | 6/1998 |
| RU | 2125835 | C1 | 2/1999 |
| RU | 2138223 | C1 | 9/1999 |
| RU | 2175534 | C2 | 11/2001 |
| RU | 2187975 | C1 | 8/2002 |
| RU | 2218242 | C2 | 12/2003 |
| TW | 231755 | A | 5/2005 |
| TW | 201114409 | A | 5/2011 |
| WO | WO-8807840 | A1 | 10/1988 |
| WO | WO-8909028 | A1 | 10/1989 |
| WO | WO-9014806 | A1 | 12/1990 |
| WO | WO-9107139 | A1 | 5/1991 |
| WO | WO-9325157 | A1 | 12/1993 |
| WO | WO-9413218 | A1 | 6/1994 |
| WO | WO-9528688 | A1 | 10/1995 |
| WO | WO-9607361 | A1 | 3/1996 |
| WO | WO-9729703 | A1 | 8/1997 |
| WO | WO-9901073 | A1 | 1/1999 |
| WO | WO-9952473 | A1 | 10/1999 |
| WO | WO-9959106 | A1 | 11/1999 |
| WO | WO-0110339 | A2 | 2/2001 |
| WO | WO-0133511 | A2 | 5/2001 |
| WO | WO-0170142 | A1 | 9/2001 |
| WO | WO-0184479 | A1 | 11/2001 |
| WO | WO-0217821 | A2 | 3/2002 |
| WO | WO-2002026145 | A1 | 4/2002 |
| WO | WO-0236024 | A1 | 5/2002 |
| WO | WO-02096268 | A2 | 12/2002 |
| WO | WO-03051210 | A2 | 6/2003 |
| WO | WO-03051211 | A1 | 6/2003 |
| WO | WO-2004030556 | A2 | 4/2004 |
| WO | WO-2004032806 | A1 | 4/2004 |
| WO | WO-2004049981 | A2 | 6/2004 |
| WO | WO-2004051301 | A2 | 6/2004 |
| WO | WO-2004078069 | A2 | 9/2004 |
| WO | WO-2004112610 | A2 | 12/2004 |
| WO | WO-2005051209 | A1 | 6/2005 |
| WO | WO-2005051233 | A2 | 6/2005 |
| WO | WO-2005051239 | A1 | 6/2005 |
| WO | WO-2005051240 | A1 | 6/2005 |
| WO | WO-2005077039 | A2 | 8/2005 |
| WO | WO-2005099636 | A1 | 10/2005 |
| WO | WO-06060795 | A1 | 6/2006 |
| WO | WO-2006058057 | A2 | 6/2006 |
| WO | WO-2006092600 | A1 | 9/2006 |
| WO | WO-2006127486 | A2 | 11/2006 |
| WO | WO-2006134345 | A1 | 12/2006 |
| WO | WO-2006136955 | A1 | 12/2006 |
| WO | WO-07041375 | A2 | 4/2007 |
| WO | WO-2007053572 | A2 | 5/2007 |
| WO | WO-2007062079 | A2 | 5/2007 |
| WO | WO-2007092841 | A2 | 8/2007 |
| WO | WO-2007137327 | A1 | 12/2007 |
| WO | WO-2007145937 | A2 | 12/2007 |
| WO | WO-2007145937 | A3 | 12/2007 |
| WO | WO-2007147235 | A1 | 12/2007 |
| WO | WO-2008014618 | A1 | 2/2008 |
| WO | WO-2008021494 | A2 | 2/2008 |
| WO | WO-2008040961 | A1 | 4/2008 |
| WO | WO-2008044055 | A1 | 4/2008 |
| WO | WO-2008091358 | A1 | 7/2008 |
| WO | WO-2008101090 | A2 | 8/2008 |
| WO | WO-2008109751 | A1 | 9/2008 |
| WO | WO-2008112996 | A1 | 9/2008 |
| WO | WO-2008140748 | A1 | 11/2008 |
| WO | WO-2009001083 | A1 | 12/2008 |
| WO | WO-2009001109 | A1 | 12/2008 |
| WO | WO-2009006741 | A1 | 1/2009 |
| WO | WO-2009025783 | A1 | 2/2009 |
| WO | WO-2009073781 | A2 | 6/2009 |
| WO | WO-2009129063 | A1 | 10/2009 |
| WO | WO-2009129067 | A1 | 10/2009 |
| WO | WO-2010033431 | A1 | 3/2010 |
| WO | WO-2010045537 | A1 | 4/2010 |
| WO | WO-2010048257 | A1 | 4/2010 |
| WO | WO-2010088696 | A1 | 8/2010 |
| WO | WO-2010093902 | A1 | 8/2010 |
| WO | WO-2010096553 | A1 | 8/2010 |
| WO | WO-2010096557 | A2 | 8/2010 |
| WO | WO-2010124164 | A1 | 10/2010 |
| WO | WO-2010129870 | A1 | 11/2010 |
| WO | WO-2010144705 | A1 | 12/2010 |
| WO | WO-2010148103 | A1 | 12/2010 |
| WO | WO-2010150223 | A1 | 12/2010 |
| WO | WO-2011018458 | A1 | 2/2011 |
| WO | WO-2011019797 | A3 | 2/2011 |
| WO | WO-2011041398 | A1 | 4/2011 |
| WO | WO-2011060536 | A1 | 5/2011 |
| WO | WO-2011063231 | A1 | 5/2011 |
| WO | WO-2011080260 | A1 | 7/2011 |
| WO | WO-2011106711 | A1 | 9/2011 |
| WO | WO-2011109260 | A1 | 9/2011 |
| WO | WO-2011110374 | A1 | 9/2011 |
| WO | WO-2011117644 | A2 | 9/2011 |
| WO | WO-2012006444 | A2 | 1/2012 |
| WO | WO-2012033821 | A1 | 3/2012 |
| WO | WO-2012058344 | A1 | 5/2012 |
| WO | WO-2012058349 | A4 | 5/2012 |
| WO | WO-2012058353 | A4 | 5/2012 |
| WO | WO-2012058355 | A4 | 5/2012 |
| WO | WO-2012061042 | A1 | 5/2012 |
| WO | WO-2012116206 | A1 | 8/2012 |
| WO | WO-2012141790 | A1 | 10/2012 |
| WO | WO-2012158917 | A1 | 11/2012 |
| WO | WO-2012173929 | A1 | 12/2012 |
| WO | WO-2012174008 | A1 | 12/2012 |
| WO | WO-2013126416 | A1 | 8/2013 |
| WO | WO-2013170872 | A1 | 11/2013 |
| WO | WO-2014019712 | A1 | 2/2014 |
| WO | WO-2015084831 | A1 | 6/2015 |
| WO | WO-2016007631 | A1 | 1/2016 |

OTHER PUBLICATIONS

"3D-Implantatplanung Und Stereolithographielmplantatbohrschablonen", Stomatologie 101.3, (2004), 55-59.

"AGC 3000 Intramedullary",—Surgical Technique Using PMMA Fixation—BioMet, Inc., (1987), 32 pgs.

"AGC Distal Fem Cutter for Dr. Hardy", Biomet, Inc., (Jun. 22, 1989), 4 pgs.

"AGC Total Knee System, Intramedullary Without Distractor Surgical Technique", Biomet, Inc., (1989), 35 pgs.

"AGC Total Knee System, Unicondylar Surgical Overview", Biomet, Inc., (Jan. 31, 1989), 5 pgs.

"AGC Traditional Surgical Overview", Biomet Orthopedics, Inc., (2001), 8 pgs.

"AGC-S Total Knee System, Surgical Technique for the AGC-S Total Knee System", Biomet, Inc., (1992), 22 pgs.

"Amazing Precision. Beautiful Results. The next evolution of MAKOplasty® is here", MAKO Surgical Corp., (Feb. 2009), 6 pgs.

"Anatomic Axial Alignment Instrumentation", Biomet, Inc., (1994), 24 pgs.

"U.S. Appl. No. 09/861,859, 312 Amendment filed Sep. 27, 2011", 3 pgs.

"U.S. Appl. No. 09/861,859, Final Office Action dated Aug. 5, 2011", 10 pgs.

"U.S. Appl. No. 09/861,859, Non Final Office Action dated Mar. 3, 2011", 9 pgs.

"U.S. Appl. No. 09/861,859, Notice of Allowance dated Sep. 8, 2011", 5 pgs.

"U.S. Appl. No. 09/861,859, Notice of Non Compliant Amendment dated Nov. 18, 2010", 3 pgs.

"U.S. Appl. No. 09/861,859, PTO Response to Rule 312 Communication dated Oct. 7, 2011", 2 pgs.

(56) **References Cited**

OTHER PUBLICATIONS

"U.S. Appl. No. 09/861,859, Response filed May 12, 2011 to Non Final Office Action dated Mar. 3, 2011", 13 pgs.
"U.S. Appl. No. 09/861,859, Response filed Aug. 22, 2011 to Final Office Action dated Aug. 5, 2011", 9 pgs.
"U.S. Appl. No. 09/861,859, Response filed Oct. 28, 2010 to Restriction Requirement dated Sep. 29, 2010", 1 pg.
"U.S. Appl. No. 09/861,859, Response filed Nov. 29, 2010 to Notice of Non Compliant Amendment dated Nov. 18, 2010", 8 pgs.
"U.S. Appl. No. 09/861,859, Restriction Requirement dated Sep. 29, 2010", 7 pgs.
"U.S. Appl. No. 11/363,548, Advisory Action dated Aug. 5, 2009", 2 pgs.
"U.S. Appl. No. 11/363,548, Appeal Brief filed Jun. 19, 2009", 52 pgs.
"U.S. Appl. No. 11/363,548, Final Office Action dated Jan. 22, 2009", 12 pgs.
"U.S. Appl. No. 11/363,548, Non Final Office Action dated Jul. 9, 2008", 11 pgs.
"U.S. Appl. No. 11/363,548, Notice of Allowance dated Apr. 9, 2010", 5 pgs.
"U.S. Appl. No. 11/363,548, Response filed Jun. 19, 2009 to Final Office Action dated Jan. 22, 2009", 9 pgs.
"U.S. Appl. No. 11/363,548, Response filed Oct. 8, 2008 to Non Final Office Action dated Jul. 9, 2008", 18 pgs.
"U.S. Appl. No. 11/971,390, Non Final Office Action dated Mar. 3, 2011", 7 pgs.
"U.S. Appl. No. 11/971,390, Notice of Allowance dated Jul. 26, 2011", 8 pgs.
"U.S. Appl. No. 11/971,390, Preliminary Amendment filed Jan. 14, 2011", 8 pgs.
"U.S. Appl. No. 11/971,390, Response filed May 12, 2011 to Non Final Office Action dated Mar. 3, 2011", 12 pgs.
"U.S. Appl. No. 11/971,390, Response filed Dec. 23, 2010 to Restriction Requirement dated Nov. 23, 2010", 1 pgs.
"U.S. Appl. No. 11/971,390, Restriction Requirement dated Nov. 23, 2010", 6 pgs.
"U.S. Appl. No. 12/025,414, Applicant's Summary of Examiner Interview filed Apr. 9, 2012", 4 pgs.
"U.S. Appl. No. 12/025,414, Final Office Action dated Mar. 14, 2012", 6 pgs.
"U.S. Appl. No. 12/025,414, Final Office Action dated May 1, 2012", 10 pgs.
"U.S. Appl. No. 12/025,414, Non Final Office Action dated Oct. 25, 2011", 10 pgs.
"U.S. Appl. No. 12/025,414, Notice of Allowance dated Jun. 13, 2012", 7 pgs.
"U.S. Appl. No. 12/025,414, Response filed Apr. 9, 2012 to Final Office Action dated Mar. 14, 2012", 15 pgs.
"U.S. Appl. No. 12/025,414, Response filed May 21, 2012 to Final Office Action dated May 1, 2012", 6 pgs.
"U.S. Appl. No. 12/025,414, Response filed Jul. 26, 2011 to Restriction Requirement dated Jul. 19, 2011", 8 pgs.
"U.S. Appl. No. 12/025,414, Response filed Dec. 22, 2011 to Non Final Office Action dated Oct. 25, 2011", 13 pgs.
"U.S. Appl. No. 12/025,414, Restriction Requirement dated Jul. 19, 2011", 5 pgs.
"U.S. Appl. No. 12/039,849, Final Office Action dated Apr. 8, 2012", 7 pgs.
"U.S. Appl. No. 12/039,849, Non Final Office Action dated Mar. 8, 2012", 11 pgs.
"U.S. Appl. No. 12/039,849, Notice of Allowance dated Jun. 6, 2012", 7 pgs.
"U.S. Appl. No. 12/039,849, Response filed Apr. 3, 2012 to Non Final Office Action dated Mar. 8, 2012", 19 pgs.
"U.S. Appl. No. 12/039,849, Response filed May 14, 2012 to Final Office Action dated Apr. 8, 2012", 7 pgs.
"U.S. Appl. No. 12/039,849, Response filed Aug. 30, 2011 to Restriction Requirement dated Aug. 16, 2011", 11 pgs.
"U.S. Appl. No. 12/039,849, Restriction Requirement dated Aug. 16, 2011", 6 pgs.
"U.S. Appl. No. 12/103,824, Examiner Interview Summary dated Jan. 12, 2012", 2 pgs.
"U.S. Appl. No. 12/103,824, Examiner Interview Summary dated Sep. 19, 2011", 3 pgs.
"U.S. Appl. No. 12/103,824, Final Office Action dated Apr. 26, 2012", 19 pgs.
"U.S. Appl. No. 12/103,824, Final Office Action dated Dec. 6, 2011", 20 pgs.
"U.S. Appl. No. 12/103,824, Non Final Office Action dated Aug. 17, 2011", 17 pgs.
"U.S. Appl. No. 12/103,824, Response filed Sep. 15, 2011 to Non Final Office Action dated Aug. 17, 2011", 16 pgs.
"U.S. Appl. No. 12/103,834, Final Office Action dated Dec. 8, 2010", 11 pgs.
"U.S. Appl. No. 12/103,834, Non Final Office Action dated Jun. 22, 2010", 9 pgs.
"U.S. Appl. No. 12/103,834, Response filed Feb. 3, 2011 to Final Office Action dated Dec. 8, 2010", 5 pgs.
"U.S. Appl. No. 12/103,834, Response filed Sep. 21, 2010 to Non Final Office Action dated Jun. 22, 2010", 11 pgs.
"U.S. Appl. No. 12/103,834, Notice of Allowance dated Feb. 23, 2011", 9 ogs.
"U.S. Appl. No. 12/103,834, Response filed Mar. 18, 2010 to Restriction Requirement dated Feb. 18, 2010", 9 pgs.
"U.S. Appl. No. 12/103,834, Restriction Requirement dated Feb. 18, 2010", 9 pgs.
"U.S. Appl. No. 12/211,407, Examiner Interview Summary dated Jan. 13, 2012", 3 pgs.
"U.S. Appl. No. 12/211,407, Examiner Interview Summary dated Dec. 5, 2013", 3 pgs.
"U.S. Appl. No. 12/211,407, Final Office Action dated Nov. 25, 2011", 14 pgs.
"U.S. Appl. No. 12/211,407, Non Final Office Action dated Aug. 17, 2011", 15 pgs.
"U.S. Appl. No. 12/211,407, Notice of Allowance dated Aug. 7, 2013", 12 pgs.
"U.S. Appl. No. 12/211,407, Response filed Jan. 16, 2012 to Final Office Action dated Nov. 25, 2011", 18 pgs.
"U.S. Appl. No. 12/211,407, Response filed Aug. 29, 2011 to Non Final Office Action dated Aug. 17, 2011", 19 pgs.
"U.S. Appl. No. 12/255,945, Advisory Action dated Feb. 5, 2014", 3 pgs.
"U.S. Appl. No. 12/255,945, Advisory Action dated Feb. 10, 2012", 3 pgs.
"U.S. Appl. No. 12/255,945, Advisory Action mailed Mar. 27, 2014", 3 pgs.
"U.S. Appl. No. 12/255,945, Appeal Brief filed Mar. 26, 2014", 29 pgs.
"U.S. Appl. No. 12/255,945, Appeal Brief filed Oct. 13, 2014", 30 pgs.
"U.S. Appl. No. 12/255,945, Appeal Decision dated Feb. 27, 2017", 12 pgs.
"U.S. Appl. No. 12/255,945, Examiner Interview Summary dated Aug. 13, 2013", 3 pgs.
"U.S. Appl. No. 12/255,945, Examiner Interview Summary dated Sep. 22, 2011", 3 pgs.
"U.S. Appl. No. 12/255,945, Examiner's Answer dated Feb. 12, 2015", 26 pgs.
"U.S. Appl. No. 12/255,945, Final Office Action dated Sep. 30, 2013", 21 pgs.
"U.S. Appl. No. 12/255,945, Final Office Action dated Nov. 28, 2011", 14 pgs.
"U.S. Appl. No. 12/255,945, Non Final Office Action dated May 7, 2013", 23 pgs.
"U.S. Appl. No. 12/255,945, Non Final Office Action dated Jul. 24, 2014", 26 pgs.
"U.S. Appl. No. 12/255,945, Non Final Office Action dated Aug. 4, 2011", 12 pgs.
"U.S. Appl. No. 12/255,945, Notice of Allowance dated May 5, 2017", 7 pgs.
"U.S. Appl. No. 12/255,945, Reply Brief filed Apr. 13, 2015", 4 pgs.

(56) **References Cited**

OTHER PUBLICATIONS

"U.S. Appl. No. 12/255,945, Response filed Jan. 17, 2012 to Final Office Action dated Nov. 28, 2011", 11 pgs.
"U.S. Appl. No. 12/255,945, Response filed Jan. 28, 2014 to Final Office Action dated Sep. 30, 2013", 13 pgs.
"U.S. Appl. No. 12/255,945, Response filed Feb. 28, 2012 to Advisory Action dated Feb. 10, 2012", 13 pgs.
"U.S. Appl. No. 12/255,945, Response filed Jul. 7, 2011 to Restriction Requirement dated Jun. 7, 2011", 8 pgs.
"U.S. Appl. No. 12/255,945, Response filed Aug. 8, 2013 to Non Final Office Action dated May 7, 2013", 13 pgs.
"U.S. Appl. No. 12/255,945, Response filed Nov. 4, 2011 to Non Final Office Action dated Aug. 4, 2011", 14 pgs.
"U.S. Appl. No. 12/255,945, Restriction Requirement dated Jun. 7, 2011", 8 pgs.
"U.S. Appl. No. 12/255,945, Supplemental Amendment filed Mar. 5, 2014", 13 pgs.
"U.S. Appl. No. 12/371,096, Appeal Decision mailed Jun. 23, 2017", 10 pgs.
"U.S. Appl. No. 12/371,096, Corrected Notice of Allowance dated Nov. 13, 2017", 2 pgs.
"U.S. Appl. No. 12/371,096, Examiner Interview Summary dated Jan. 13, 2012", 3 pgs.
"U.S. Appl. No. 12/371,096, Examiner Interview Summary dated Dec. 5, 2013", 3 pgs.
"U.S. Appl. No. 12/371,096, Final Office Action dated Jul. 6, 2011", 23 pgs.
"U.S. Appl. No. 12/371,096, Final Office Action dated Nov. 25, 2011", 14 pgs.
"U.S. Appl. No. 12/371,096, Non Final Office Action dated Mar. 30, 2011", 19 pgs.
"U.S. Appl. No. 12/371,096, Non Final Office Action dated Apr. 17, 2014", 23 pgs.
"U.S. Appl. No. 12/371,096, Non Final Office Action dated Aug. 17, 2011", 15 pgs.
"U.S. Appl. No. 12/371,096, Non Final Office Action dated Aug. 28, 2014", 21 pgs.
"U.S. Appl. No. 12/371,096, Notice of Allowance dated Aug. 7, 2013", 12 pgs.
"U.S. Appl. No. 12/371,096, Notice of Allowance dated Oct. 20, 2017", 5 pgs.
"U.S. Appl. No. 12/371,096, Notice of Allowance dated Nov. 5, 3013", 2 pgs.
"U.S. Appl. No. 12/371,096, Notice of Allowance dated Nov. 15, 2013", 2 pgs.
"U.S. Appl. No. 12/371,096, Response filed Jan. 16, 2012 to Final Office Action dated Nov. 25, 2011", 15 pgs.
"U.S. Appl. No. 12/371,096, Response filed Aug. 29, 2011 to Non Final Office Action dated Aug. 17, 2011", 19 pgs.
"U.S. Appl. No. 12/389,901, Applicant's Summary of Examiner Interview filed Nov. 28, 2011", 1 pg.
"U.S. Appl. No. 12/389,901, Examiner Interview Summary dated Nov. 1, 2011", 3 pgs.
"U.S. Appl. No. 12/389,901, Non Final Office Action dated May 12, 2011", 6 pgs.
"U.S. Appl. No. 12/389,901, Notice of Allowance dated Sep. 30, 2011", 12 pgs.
"U.S. Appl. No. 12/389,901, Notice of Allowance dated Dec. 7, 2011", 9 pgs.
"U.S. Appl. No. 12/389,901, Response filed Mar. 17, 2011 to Restriction Requirement dated Mar. 2, 2011", 8 pgs.
"U.S. Appl. No. 12/389,901, Response filed Jun. 28, 2011 to Non Final Office Action dated May 12, 2011", 11 pgs.
"U.S. Appl. No. 12/389,901, Restriction Requirement dated Mar. 2, 2011", 6 pgs.
"U.S. Appl. No. 12/483,807 , Advisory Action dated Jan. 3, 2012", 2 pgs.
"U.S. Appl. No. 12/483,807, Applicant's Summary of Examiner Interview filed Jan. 19, 2012", 3 pgs.
"U.S. Appl. No. 12/483,807, Applicant's Summary of Examiner Interview filed Dec. 21, 2011", 3 pgs.
"U.S. Appl. No. 12/483,807, Final Office Action dated Nov. 4, 2011", 20 pgs.
"U.S. Appl. No. 12/483,807, Non Final Office Action dated Oct. 3, 2011", 18 pgs.
"U.S. Appl. No. 12/483,807, Notice of Allowance dated Feb. 21, 2013", 9 pgs.
"U.S. Appl. No. 12/483,807, Response filed Jan. 16, 2012 to Advisory Action dated Jan. 3, 2012", 14 pgs.
"U.S. Appl. No. 12/483,807, Response filed Oct. 24, 2011 to Non Final Office Action dated Oct. 3 2011", 16 pgs.
"U.S. Appl. No. 12/483,807, Response filed Dec. 19, 2011 to Final Office Action dated Nov. 4, 2011", 7 pgs.
"U.S. Appl. No. 12/486,992, Examiner Interview Summary dated Jan. 9, 2012", 3 pgs.
"U.S. Appl. No. 12/486,992, Examiner Interview Summary dated Mar. 9, 2012", 4 pgs.
"U.S. Appl. No. 12/486,992, Final Office Action dated Feb. 21, 2012", 8 pgs.
"U.S. Appl. No. 12/486,992, Non Final Office Action dated Nov. 21, 2011", 9 pgs.
"U.S. Appl. No. 12/486,992, Notice of Allowance dated Jun. 12, 2014", 11 pgs.
"U.S. Appl. No. 12/486,992, Preliminary Amendment filed Mar. 9, 2010", 3 pgs.
"U.S. Appl. No. 12/486,992, Response filed Jan. 17, 2012 to Non Final Office Action dated Nov. 21, 2011", 13 pgs.
"U.S. Appl. No. 12/486,992, Response filed Mar. 12, 2012 to Final Office Action dated Feb. 21, 2012", 10 pgs.
"U.S. Appl. No. 12/486,992, Response filed Oct. 24, 2011 to Restriction Requirement dated Sep. 30, 2011", 7 pgs.
"U.S. Appl. No. 12/486,992, Restriction Requirement dated Sep. 30, 2011", 6 pgs.
"U.S. Appl. No. 12/571,969, Advisory Action dated Oct. 21, 2013", 3 pgs.
"U.S. Appl. No. 12/571,969, Examiner Interview Summary dated Feb. 26, 2013", 3 pgs.
"U.S. Appl. No. 12/571,969, Examiner Interview Summary dated Mar. 11, 2013", 3 pgs.
"U.S. Appl. No. 12/571,969, Final Office Action dated Jan. 15, 2015", 9 pgs.
"U.S. Appl. No. 12/571,969, Final Office Action dated Jul. 31, 2013", 8 pgs.
"U.S. Appl. No. 12/571,969, Non Final Office Action dated Jun. 26, 2014", 8 pgs.
"U.S. Appl. No. 12/571,969, Non Final Office Action dated Dec. 19, 2012", 7 pgs.
"U.S. Appl. No. 12/571,969, Notice of Allowance dated Jun. 23, 2015", 8 pgs.
"U.S. Appl. No. 12/571,969, Preliminary Amendment filed Mar. 16, 2010", 3 pgs.
"U.S. Appl. No. 12/571,969, Response filed Mar. 6, 2013 to Non Final Office Action dated Dec. 19, 2012", 10 pgs.
"U.S. Appl. No. 12/571,969, Response filed May 15, 2015 to Final Office Action dated Jan. 15, 2015", 16 pgs.
"U.S. Appl. No. 12/571,969, Response filed Jun. 4, 2012 to Restriction Requirement dated May 9, 2012", 9 pgs.
"U.S. Appl. No. 12/571,969, Response filed Sep. 26, 2014 to Non Final Office Action dated Jun. 26, 2014", 12 pgs.
"U.S. Appl. No. 12/571,969, Response filed Sep. 30, 2013 to Final Office Action dated Jul. 31, 2013", 13 pgs.
"U.S. Appl. No. 12/571,969, Restriction Requirement dated May 9, 2012", 9 pgs.
"U.S. Appl. No. 12/714,023, Non Final Office Action dated Jan. 26, 2012", 15 pgs.
"U.S. Appl. No. 12/714,023, Notice of Allowance dated Apr. 9, 2012", 10 pgs.
"U.S. Appl. No. 12/714,023, Response filed Jan. 3, 2012 to Restriction Requirement dated Dec. 12, 2011", 9 pgs.
"U.S. Appl. No. 12/714,023, Response filed Feb. 14, 2012 to Non Final Office Action dated Jan. 26, 2012", 15 pgs.

(56) **References Cited**

OTHER PUBLICATIONS

"U.S. Appl. No. 12/714,023, Restriction Requirement dated Dec. 12, 2011", 5 pgs.
"U.S. Appl. No. 12/872,663, Non Final Office Action dated Jun. 20, 2012", 11 pgs.
"U.S. Appl. No. 12/872,663, Notice of Allowance dated Nov. 15, 2012", 9 pgs.
"U.S. Appl. No. 12/872,663, Response filed May 21, 2012 to Restriction Requirement dated Apr. 27, 2012", 7 pgs.
"U.S. Appl. No. 12/872,663, Response filed Sep. 13, 2012 to Non Final Office Action dated Jun. 20, 2012", 9 pgs.
"U.S. Appl. No. 12/872,663, Restriction Requirement dated Apr. 27, 2012", 6 pgs.
"U.S. Appl. No. 12/872,663, Supplemental Amendment filed Nov. 8, 2012", 8 pgs.
"U.S. Appl. No. 12/888,005, Non Final Office Action dated Jun. 1, 2012", 11 pgs.
"U.S. Appl. No. 12/888,005, Notice of Allowance dated Sep. 27, 2012", 6 pgs.
"U.S. Appl. No. 12/888,005, Response filed May 15, 2012 to Restriction Requirement dated Apr. 27, 2012", 7 pgs.
"U.S. Appl. No. 12/888,005, Response filed Jul. 11, 2012 to Non Final Office Action dated Jun. 1, 2012", 12 pgs.
"U.S. Appl. No. 12/888,005, Restriction Requirement dated Apr. 27, 2012", 7 pgs.
"U.S. Appl. No. 12/893,306, Examiner Interview Summary dated Dec. 18, 2014", 3 pgs.
"U.S. Appl. No. 12/893,306, Final Office Action dated Sep. 11, 2014", 8 pgs.
"U.S. Appl. No. 12/893,306, Non Final Office Action dated Feb. 26, 2014", 9 pgs.
"U.S. Appl. No. 12/893,306, Notice of Allowability dated Jul. 29, 2015", 2 pgs.
"U.S. Appl. No. 12/893,306, Notice of Allowance dated Apr. 14, 2015", 5 pgs.
"U.S. Appl. No. 12/893,306, Response filed Jan. 12, 2015 to Final Office Action dated Sep. 11, 2014", 14 pgs.
"U.S. Appl. No. 12/893,306, Response filed May 22, 2014 to Non Final Office Action dated Feb. 26, 2014", 8 pgs.
"U.S. Appl. No. 12/893,306, Response filed Nov. 4, 2013 to Restriction Requirement dated Oct. 4, 2013", 11 pgs.
"U.S. Appl. No. 12/893,306, Restriction Requirement dated Oct. 4, 2013", 11 pgs.
"U.S. Appl. No. 12/938,905, Advisory Action dated Feb. 4, 2013", 3 pgs.
"U.S. Appl. No. 12/938,905, Appeal Brief filed Feb. 28, 2013", 1 pg.
"U.S. Appl. No. 12/938,905, Appeal Brief filed Apr. 29, 2013", 26 pgs.
"U.S. Appl. No. 12/938,905, Appeal Decision mailed Dec. 14, 2015", 18 pgs.
"U.S. Appl. No. 12/938,905, Examiner Interview Summary dated Jan. 30, 2013", 3 pgs.
"U.S. Appl. No. 12/938,905, Examiner Interview Summary dated Jul. 13, 2012", 3 pgs.
"U.S. Appl. No. 12/938,905, Examiner's Answer to Appeal Brief mailed Jun. 24, 2013", 8 pgs.
"U.S. Appl. No. 12/938,905, Final Office Action dated Nov. 28, 2012", 11 pgs.
"U.S. Appl. No. 12/938,905, Non Final Office Action dated Jun. 4, 2012", 11 pgs.
"U.S. Appl. No. 12/938,905, Reply Brief filed Aug. 26, 2013", 12 pgs.
"U.S. Appl. No. 12/938,905, Response filed Jan. 28, 2013 to Final Office Action dated Nov. 28, 2012", 19 pgs.
"U.S. Appl. No. 12/938,905, Response filed May 14, 2012 to Restriction Requirement dated Apr. 17, 2012", 7 pgs.
"U.S. Appl. No. 12/938,905, Response filed Jul. 19, 2012 to Non Final Office Action dated Jun. 4, 2012", 20 pgs.
"U.S. Appl. No. 12/938,905, Response filed Oct. 8, 2012 to Restriction Requirement dated Sep. 14, 2012", 8 pgs.
"U.S. Appl. No. 12/938,905, Restriction Requirement dated Apr. 17, 2012", 8 pgs.
"U.S. Appl. No. 12/938,905, Restriction Requirement dated Sep. 14, 2012", 6 pgs.
"U.S. Appl. No. 12/938,913, Advisory Action dated Jan. 15, 2015", 3 pgs.
"U.S. Appl. No. 12/938,913, Examiner Interview Summary dated Dec. 18, 2014", 3 pgs.
"U.S. Appl. No. 12/938,913, Final Office Action dated Oct. 1, 2014", 9 pgs.
"U.S. Appl. No. 12/938,913, Non Final Office Action dated Mar. 11, 2014", 10 pgs.
"U.S. Appl. No. 12/938,913, Non Final Office Action dated Apr. 9, 2015", 8 pgs.
"U.S. Appl. No. 12/938,913, Notice of Allowance dated Nov. 12, 2015", 5 pgs.
"U.S. Appl. No. 12/938,913, Response filed Jan. 2, 2015 to Final Office Action dated Oct. 1, 2014", 10 pgs.
"U.S. Appl. No. 12/938,913, Response filed Feb. 2, 2015 to Advisory Action dated Jan. 15, 2015", 14 pgs.
"U.S. Appl. No. 12/938,913, Response filed Jun. 11, 2014 to Non Final Office Action dated Mar. 11, 2014", 9 pgs.
"U.S. Appl. No. 12/938,913, Response filed Jul. 7, 2015 to Non Final Office Action dated Apr. 9, 2015", 11 pgs.
"U.S. Appl. No. 12/938,913, Response filed Nov. 6, 2013 to Restriction Requirement dated Oct. 7, 2013", 1 pg.
"U.S. Appl. No. 12/938,913, Restriction Requirement dated Oct. 7, 2013", 7 pgs.
"U.S. Appl. No. 12/955,361 , Non Final Office Action dated Mar. 27, 2013", 23 pgs.
"U.S. Appl. No. 12/955,361 , Response filed Jun. 27, 2013 to Non Final Office Action dated Mar. 27, 2013", 12 pgs.
"U.S. Appl. No. 12/955,361, Notice of Allowance dated Jul. 18, 2013", 9 pgs.
"U.S. Appl. No. 12/955,361, Notice of Allowance dated Oct. 1, 2013", 4 pgs.
"U.S. Appl. No. 12/955,361, Notice of Allowance dated Oct. 24, 2013", 4 pgs.
"U.S. Appl. No. 12/955,361, Response filed Jan. 14, 2013 to Restriction Requirement dated Dec. 14, 2012", 13 pgs.
"U.S. Appl. No. 12/955,361, Restriction Requirement dated Dec. 14, 2012", 9 pgs.
"U.S. Appl. No. 12/973,214 , Response filed Feb. 21, 2014 to Final Office Action dated Nov. 21, 2013", 16 pgs.
"U.S. Appl. No. 12/973,214, Examiner Interview Summary dated Jan. 24, 2014", 3 pgs.
"U.S. Appl. No. 12/973,214, Final Office Action dated Sep. 9, 2015", 10 pgs.
"U.S. Appl. No. 12/973,214, Final Office Action dated Nov. 21, 2013", 14 pgs.
"U.S. Appl. No. 12/973,214, Non Final Office Action dated Feb. 3, 2015", 14 pgs.
"U.S. Appl. No. 12/973,214, Non Final Office Action dated May 22, 2013", 11 pgs.
"U.S. Appl. No. 12/973,214, Notice of Allowance dated Jan. 11, 2016", 8 pgs.
"U.S. Appl. No. 12/973,214, Response filed Apr. 12, 2013 to Restriction Requirement dated Mar. 13, 2013", 9 pgs.
"U.S. Appl. No. 12/973,214, Response filed Jun. 3, 2015 to Non Final Office Action dated Feb. 3, 2015", 13 pgs.
"U.S. Appl. No. 12/973,214, Response filed Aug. 22, 2013 to Non Final Office Action dated May 22, 2013", 12 pgs.
"U.S. Appl. No. 12/973,214, Response filed Nov. 6, 2015 to Final Office Action dated Sep. 9, 2015", 14 pgs.
"U.S. Appl. No. 12/973,214, Restriction Requirement dated Mar. 13, 2013", 8 pgs.
"U.S. Appl. No. 12/978,069, Advisory Action dated Jun. 12, 2013", 3 pgs.
"U.S. Appl. No. 12/978,069, Examiner Interview Summary dated May 28, 2013", 3 pgs.
"U.S. Appl. No. 12/978,069, Final Office Action dated Mar. 25, 2013", 11 pgs.

(56) **References Cited**

OTHER PUBLICATIONS

"U.S. Appl. No. 12/978,069, Non Final Office Action dated Sep. 11, 2012", 11 pgs.
"U.S. Appl. No. 12/978,069, Notice of Allowance dated Jun. 21, 2013", 13 pgs.
"U.S. Appl. No. 12/978,069, Response filed May 23, 2013 to Final Office Action dated Mar. 25, 2013", 17 pgs.
"U.S. Appl. No. 12/978,069, Response filed Aug. 27, 2012 to Restriction Requirement dated Aug. 10, 2012", 8 pgs.
"U.S. Appl. No. 12/978,069, Response filed Dec. 10, 2012 to Non Final Office Action dated Sep. 22, 2012", 15 pgs.
"U.S. Appl. No. 12/978,069, Restriction Requirement dated Aug. 10, 2012", 11 pgs.
"U.S. Appl. No. 12/978,069, Supplemental Notice of Allowance dated Aug. 9, 2013", 3 pgs.
"U.S. Appl. No. 12/978,069, Supplemental Notice of Allowance dated Sep. 17, 2013", 2 pgs.
"U.S. Appl. No. 13/041,469, Non Final Office Action dated Mar. 22, 2013", 12 pgs.
"U.S. Appl. No. 13/041,469, Notice of Allowance dated Aug. 8, 2013", 6 pgs.
"U.S. Appl. No. 13/041,469, Notice of Allowance dated Oct. 3, 2013", 2 pgs.
"U.S. Appl. No. 13/041,469, Notice of Allowance dated Nov. 19, 2013", 2 pgs.
"U.S. Appl. No. 13/041,469, Response filed Jun. 18, 2013 to Non Final Office Action dated Mar. 22, 2013", 15 pgs.
"U.S. Appl. No. 13/041,469, Response filed Oct. 25, 2012 to Restriction Requirement dated Sep. 25, 2012", 1 pg.
"U.S. Appl. No. 13/041,469, Restriction Requirement dated Sep. 25, 2012", 5 pgs.
"U.S. Appl. No. 13/041,495, Appeal Brief filed Oct. 4, 2013", 39 pgs.
"U.S. Appl. No. 13/041,495, Examiner Interview Summary dated Feb. 20, 2013", 3 pgs.
"U.S. Appl. No. 13/041,495, Examiner Interview Summary dated Aug. 6, 2013", 3 pgs.
"U.S. Appl. No. 13/041,495, Final Office Action dated Jun. 18, 2013", 14 pgs.
"U.S. Appl. No. 13/041,495, Non Final Office Action dated Nov. 2, 2012", 10 pgs.
"U.S. Appl. No. 13/041,495, Non Final Office Action dated Dec. 31, 2013", 11 pgs.
"U.S. Appl. No. 13/041,495, Notice of Allowance dated Jun. 11, 2014", 5 pgs.
"U.S. Appl. No. 13/041,495, Response filed Jan. 31, 2013 to Non Final Office Action dated Nov. 2, 2012", 13 pgs.
"U.S. Appl. No. 13/041,495, Response filed Mar. 31, 2014 to Non Final Office Action dated Dec. 31, 2013", 12 pgs.
"U.S. Appl. No. 13/041,495, Response filed Oct. 8, 2012 to Restriction Requirement dated Sep. 25, 2012", 8 pgs.
"U.S. Appl. No. 13/041,495, Restriction Requirement dated Sep. 25, 2012", 7 pgs.
"U.S. Appl. No. 13/041,495, Supplemental Amendment filed Feb. 20, 2013", 15 pgs.
"U.S. Appl. No. 13/041,665, Examiner Interview Summary dated Apr. 30, 2013", 3 pgs.
"U.S. Appl. No. 13/041,665, Final Office Action dated Mar. 5, 2013", 10 pgs.
"U.S. Appl. No. 13/041,665, Non Final Office Action dated Sep. 27, 2012", 10 pgs.
"U.S. Appl. No. 13/041,665, Notice of Allowance dated May 16, 2013", 7 pgs.
"U.S. Appl. No. 13/041,665, Response filed May 3, 2013 to Final Office Action dated Mar. 5, 2013", 13 pgs.
"U.S. Appl. No. 13/041,665, Response filed Sep. 17, 2012 to Restriction Requirement dated Aug. 20, 2012", 6 pgs.
"U.S. Appl. No. 13/041,665, Response filed Dec. 27, 2012 to Non Final Office Action dated Sep. 27, 2012", 16 pgs.
"U.S. Appl. No. 13/041,665, Restriction Requirement dated Aug. 20, 2012", 9 pgs.
"U.S. Appl. No. 13/041,883, Advisory Action dated May 18, 2016", 3 pgs.
"U.S. Appl. No. 13/041,883, Appeal Brief filed Jul. 25, 2016", 26 pgs.
"U.S. Appl. No. 13/041,883, Examiner Interview Summary dated Oct. 27, 2014", 3 pgs.
"U.S. Appl. No. 13/041,883, Examiner's Answer dated Mar. 8, 2017", 8 pgs.
"U.S. Appl. No. 13/041,883, Final Office Action dated Jan. 15, 2015", 10 pgs.
"U.S. Appl. No. 13/041,883, Final Office Action dated Feb. 11, 2016", 9 pgs.
"U.S. Appl. No. 13/041,883, Non Final Office Action dated Jun. 26, 2014", 8 pgs.
"U.S. Appl. No. 13/041,883, Non Final Office Action dated Aug. 13, 2015", 10 pgs.
"U.S. Appl. No. 13/041,883, Reply Brief Filed May 2, 2017 to Examiners Answer dated Mar. 8, 2017", 8 pgs.
"U.S. Appl. No. 13/041,883, Response filed Feb. 17, 2014 to Restriction Requirement dated Jan. 15, 2014", 3 pgs.
"U.S. Appl. No. 13/041,883, Response filed Apr. 7, 2016 to Final Office Action Feb. 11, 2016", 17 pgs.
"U.S. Appl. No. 13/041,883, Response filed May 15, 2015 to Final Office Action dated Jan. 15, 2015", 13 pgs.
"U.S. Appl. No. 13/041,883, Response filed Sep. 26, 2014 to Non Final Office Action dated Jun. 26, 2014", 12 pgs.
"U.S. Appl. No. 13/041,883, Response filed Nov. 6, 2015 to Non Final Office Action dated Aug. 13, 2015", 16 pgs.
"U.S. Appl. No. 13/041,883, Restriction Requirement dated Jan. 15, 2014", 9 pgs.
"U.S. Appl. No. 13/045,169, Applicant's Summary of Examiner Interview filed Sep. 21, 2015", 2 pgs.
"U.S. Appl. No. 13/045,169, Examiner Interview Summary dated Sep. 10, 2015", 3 pgs.
"U.S. Appl. No. 13/045,169, Final Office Action dated Dec. 3, 2015", 8 pgs.
"U.S. Appl. No. 13/045,169, Non Final Office Action dated Jun. 4, 2015", 8 pgs.
"U.S. Appl. No. 13/045,169, Non Final Office Action dated Sep. 24, 2014", 9 pgs.
"U.S. Appl. No. 13/045,169, Response filed May 15, 2014 to Restriction Requirement dated Mar. 14, 2014", 10 pgs.
"U.S. Appl. No. 13/045,169, Response filed Aug. 31, 2015 to Non Final Office Action dated Jun. 4, 2015", 14 pgs.
"U.S. Appl. No. 13/045,169, Response filed Dec. 23, 2014 to Non Final Office Action dated Sep. 24, 2014", 10 pgs.
"U.S. Appl. No. 13/045,169, Restriction Requirement dated Mar. 14, 2014", 10 pgs.
"U.S. Appl. No. 13/047,924, Examiner Interview Summary dated Jan. 21, 2015", 3 pgs.
"U.S. Appl. No. 13/047,924, Examiner Interview Summary dated Jan. 25, 2013", 3 pgs.
"U.S. Appl. No. 13/047,924, Examiner Interview Summary dated Sep. 5, 2013", 3 pgs.
"U.S. Appl. No. 13/047,924, Examiner Interview Summary dated Sep. 18, 2012", 3 pgs.
"U.S. Appl. No. 13/047,924, Final Office Action dated Apr. 3, 2015", 16 pgs.
"U.S. Appl. No. 13/047,924, Final Office Action dated Jul. 18, 2013", 14 pgs.
"U.S. Appl. No. 13/047,924, Non Final Office Action dated Sep. 21, 2012", 11 pgs.
"U.S. Appl. No. 13/047,924, Non Final Office Action dated Nov. 3, 2014", 14 pgs.
"U.S. Appl. No. 13/047,924, Response filed Feb. 3, 2015 to Non Final Office Action dated Nov. 3, 2014", 16 pgs.
"U.S. Appl. No. 13/047,924, Response filed May 1, 2013 to Restriction Requirement dated Apr. 1, 2013", 11 pgs.
"U.S. Appl. No. 13/047,924, Response filed Sep. 17, 2012 to Restriction Requirement dated Aug. 20, 2012", 9 pgs.

(56) **References Cited**

OTHER PUBLICATIONS

"U.S. Appl. No. 13/047,924, Response filed Oct. 18, 2013 to Final Office Action dated Jul. 18, 2013", 18 pgs.
"U.S. Appl. No. 13/047,924, Response filed Dec. 20, 2012 to Non Final Office Action dated Sep. 21, 2012", 19 pgs.
"U.S. Appl. No. 13/047,924, Restriction Requirement dated Apr. 1, 2013", 7 pgs.
"U.S. Appl. No. 13/047,924, Restriction Requirement dated Aug. 20, 2012", 8 pgs.
"U.S. Appl. No. 13/081,618, Examiner Interview Summary dated Feb. 5, 2013", 3 pgs.
"U.S. Appl. No. 13/081,618, Examiner Interview Summary dated Aug. 31, 2012".
"U.S. Appl. No. 13/081,618, Final Office Action dated Nov. 19, 2012", 8 pgs.
"U.S. Appl. No. 13/081,618, Non Final Office Action dated Jul. 25, 2012", 7 pgs.
"U.S. Appl. No. 13/081,618, Notice of Allowance dated Feb. 26, 2013", 9 pgs.
"U.S. Appl. No. 13/081,618, Response filed Feb. 15, 2013 to Final Office Action dated Nov. 19, 2012", 12 pgs.
"U.S. Appl. No. 13/081,618, Response filed Aug. 23, 2012 to Non Final Office Action dated Jul. 25, 2012", 10 pgs.
"U.S. Appl. No. 13/081,618, Supplemental Notice of Allowability dated Jun. 21, 2013", 2 pgs.
"U.S. Appl. No. 13/088,787, Final Office Action dated May 20, 2015", 11 pgs.
"U.S. Appl. No. 13/088,787, Non Final Office Action dated Sep. 11, 2014", 8 pgs.
"U.S. Appl. No. 13/088,787, Restriction Requirement dated Mar. 12, 2014", 9 pgs.
"U.S. Appl. No. 13/106,295, Non Final Office Action dated Jan. 24, 2013", 14 pgs.
"U.S. Appl. No. 13/106,295, Notice of Allowance dated Aug. 1, 2013", 9 pgs.
"U.S. Appl. No. 13/106,295, Response filed Apr. 16, 2013 to Non Final Office Action dated Jan. 24, 2013", 10 pgs.
"U.S. Appl. No. 13/106,295, Response filed Dec. 20, 2012 to Restriction Requirement dated Nov. 23, 2012", 1 pg.
"U.S. Appl. No. 13/106,295, Restriction Requirement dated Nov. 23, 2012", 5 pgs.
"U.S. Appl. No. 13/111,007, Non Final Office Action dated Mar. 25, 2013", 10 pgs.
"U.S. Appl. No. 13/111,007, Notice of Allowance dated Aug. 1, 2013", 8 pgs.
"U.S. Appl. No. 13/111,007, Notice of Allowance dated Oct. 4, 2013", 2 pgs.
"U.S. Appl. No. 13/111,007, Notice of Allowance dated Nov. 7, 2013", 2 pgs.
"U.S. Appl. No. 13/111,007, Response filed Jun. 20, 2013 to Non Final Office Action dated Mar. 25, 2013", 12 pgs.
"U.S. Appl. No. 13/111,007, Response filed Nov. 26, 2012 to Restriction Requirement dated Sep. 24, 2012", 13 pgs.
"U.S. Appl. No. 13/111,007, Restriction Requirement dated Sep. 24, 2012", 7 pgs.
"U.S. Appl. No. 13/303,546, Non Final Office Action dated Jun. 29, 2012", 12 pgs.
"U.S. Appl. No. 13/303,546, Notice of Allowance dated Nov. 6, 2012", 10 pgs.
"U.S. Appl. No. 13/303,546, Response filed Jun. 14, 2012 to Restriction Requirement dated May 30, 2012", 7 pgs.
"U.S. Appl. No. 13/303,546, Response filed Aug. 16, 2012 to Non Final Office Action dated Jun. 29, 2012", 11 pgs.
"U.S. Appl. No. 13/303,546, Restriction Requirement dated May 30, 2012", 6 pgs.
"U.S. Appl. No. 13/303,546, Supplemental Notice of Allowance dated Jan. 8, 2013", 4 pgs.
"U.S. Appl. No. 13/303,546, Supplemental Notice of Allowance dated Feb. 13, 2013", 4 pgs.
"U.S. Appl. No. 13/343,957, Non Final Office Action dated Feb. 20, 2014", 14 pgs.
"U.S. Appl. No. 13/343,957, Notice of Allowance dated Jul. 24, 2014", 7 pgs.
"U.S. Appl. No. 13/343,957, Response filed May 20, 2014 to Non Final Office Action dated Feb. 20, 2014", 14 pgs.
"U.S. Appl. No. 13/400,652, Corrected Notice of Allowance dated Feb. 1, 2016", 2 pgs.
"U.S. Appl. No. 13/400,652, Non Final Office Action dated Jun. 17, 2015", 7 pgs.
"U.S. Appl. No. 13/400,652, Notice of Allowance dated Nov. 11, 2016", 7 pgs.
"U.S. Appl. No. 13/400,652, Response filed Jan. 28, 2015 to Restriction Requirement dated Nov. 28, 2014", 17 pgs.
"U.S. Appl. No. 13/400,652, Response filed Apr. 13, 2015 to Restriction Requirement dated Feb. 13, 2015", 16 pgs.
"U.S. Appl. No. 13/400,652, Response filed Aug. 13, 2014 to Restriction Requirement dated Jun. 13, 2014", 19 pgs.
"U.S. Appl. No. 13/400,652, Response filed Sep. 16, 2015 to Non Final Office Action dated Jun. 17, 2015", 12 pgs.
"U.S. Appl. No. 13/400,652, Restriction Requirement dated Feb. 13, 2015", 8 pgs.
"U.S. Appl. No. 13/400,652, Restriction Requirement dated Jun. 13, 2014", 9 pgs.
"U.S. Appl. No. 13/400,652, Restriction Requirement dated Nov. 28, 2014", 7 pgs.
"U.S. Appl. No. 13/527,981, Advisory Action dated Jan. 20, 2016", 3 pgs.
"U.S. Appl. No. 13/527,981, Corrected Notice of Allowance dated Nov. 27, 2017", 2 pgs.
"U.S. Appl. No. 13/527,981, Examiner Interview Summary dated Apr. 24, 2017", 5 pgs.
"U.S. Appl. No. 13/527,981, Final Office Action dated Feb. 5, 2015", 22 pgs.
"U.S. Appl. No. 13/527,981, Final Office Action dated Feb. 8, 2017", 17 pgs.
"U.S. Appl. No. 13/527,981, Final Office Action dated Nov. 6, 2015", 13 pgs.
"U.S. Appl. No. 13/527,981, Non Final Office Action dated Feb. 26, 2015", 10 pgs.
"U.S. Appl. No. 13/527,981, Non Final Office Action dated Jun. 22, 2017", 6 pgs.
"U.S. Appl. No. 13/527,981, Non Final Office Action dated Jul. 28, 2016", 11 pgs.
"U.S. Appl. No. 13/527,981, Non Final Office Action dated Sep. 15, 2014", 19 pgs.
"U.S. Appl. No. 13/527,981, Notice of Allowance dated Nov. 3, 2017", 5 pgs.
"U.S. Appl. No. 13/527,981, Response filed Jan. 6, 2016 to Final Office Action dated Nov. 6, 2015", 14 pgs.
"U.S. Appl. No. 13/527,981, Response filed May 8, 2017 to Final Office Action dated Feb. 8, 2017", 18 pgs.
"U.S. Appl. No. 13/527,981, Response filed May 27, 2014 to Restriction Requirement dated Mar. 27, 2014", 11 pgs.
"U.S. Appl. No. 13/527,981, Response filed Jul. 27, 2015 to Non-Final Office Action dated Feb. 26, 2015", 25 pgs.
"U.S. Appl. No. 13/527,981, Response filed Sep. 21, 2017 to Non Final Office Action dated Jun. 22, 2017", 11 pgs.
"U.S. Appl. No. 13/527,981, Response Filed Oct. 28, 2016 to Non-Final Office Action dated Jul. 28, 2016", 15 pgs.
"U.S. Appl. No. 13/527,981, Restriction Requirement dated Mar. 27, 2014", 7 pgs.
"U.S. Appl. No. 13/572,895, Non Final Office Action dated Nov. 7, 2013", 5 pgs.
"U.S. Appl. No. 13/572,895, Notice of Allowance dated Apr. 29, 2014", 7 pgs.
"U.S. Appl. No. 13/572,895, Response filed Feb. 7, 2014 to Non Final Office Action dated Nov. 7, 2013", 13 pgs.
"U.S. Appl. No. 13/674,531, Final Office Action dated Apr. 29, 2015", 8 pgs.
"U.S. Appl. No. 13/674,531, Response filed Jul. 29, 2015 to Final Office Action dated Apr. 29, 2015", 12 pgs.

(56) **References Cited**

OTHER PUBLICATIONS

"U.S. Appl. No. 13/674,531, Restriction Requirement dated Sep. 24, 2014", 7 pgs.
"U.S. Appl. No. 13/713,710, Notice of Allowance dated Sep. 15, 2015", 10 pgs.
"U.S. Appl. No. 13/713,710, Response filed Aug. 25, 15 to Restriction Requirement dated Jul. 2, 2015", 7 pgs.
"U.S. Appl. No. 13/713,710, Restriction Requirement dated Jul. 2, 2015", 6 pgs.
"U.S. Appl. No. 13/744,022, Advisory Action dated Oct. 27, 2014", 3 pgs.
"U.S. Appl. No. 13/744,022, Final Office Action dated Jul. 14, 2014", 9 pgs.
"U.S. Appl. No. 13/744,022, Non Final Office Action dated Jan. 30, 2014", 20 pgs.
"U.S. Appl. No. 13/744,022, Notice of Allowance dated Nov. 28, 2014", 9 pgs.
"U.S. Appl. No. 13/744,022, Response filed Apr. 25, 2014 to Non Final Office Action dated Jan. 30, 2014", 16 pgs.
"U.S. Appl. No. 13/744,022, Response filed Oct. 8, 2014 to Final Office Action dated Jul. 14, 2014", 15 pgs.
"U.S. Appl. No. 13/766,419, Advisory Action dated May 18, 2015", 2 pgs.
"U.S. Appl. No. 13/766,419, Final Office Action dated Jan. 13, 2015", 16 pgs.
"U.S. Appl. No. 13/766,419, Non Final Office Action dated14", 14 pgs.
"U.S. Appl. No. 13/766,419, Response filed May 12, 2015 to Final Office Action dated Jan. 13, 2015", 13 pgs.
"U.S. Appl. No. 13/766,419, Response filed Dec. 5, 2014 to Non Final Office Action dated Sep. 5, 2014", 12 pgs.
"U.S. Appl. No. 13/800,334, Examiner Interview Summary dated Jan. 29, 2015", 4 pgs.
"U.S. Appl. No. 13/800,334, Final Office Action dated Feb. 12, 2015", 11 pgs.
"U.S. Appl. No. 13/800,334, Final Office Action dated Apr. 6, 2016", 19 pgs.
"U.S. Appl. No. 13/800,334, Final Office Action dated Jun. 15, 2017", 22 pgs.
"U.S. Appl. No. 13/800,334, Non Final Office Action dated Sep. 24, 2015", 14 pgs.
"U.S. Appl. No. 13/800,334, Non Final Office Action dated Oct. 22, 2014", 11 pgs.
"U.S. Appl. No. 13/800,334, Non Final Office Action dated Dec. 15, 2016", 26 pgs.
"U.S. Appl. No. 13/800,334, Notice of Allowance dated Aug. 31, 2017", 8 pgs.
"U.S. Appl. No. 13/800,334, Response filed Jan. 21, 2015 to Non Final Office Action dated Oct. 22, 2014", 12 pgs.
"U.S. Appl. No. 13/800,334, Response filed Mar. 15, 2017 to Non Final Office Action dated Dec. 15, 2016", 16 pgs.
"U.S. Appl. No. 13/800,334, Response filed Jun. 24, 2016 to Final Office Action dated Apr. 7, 2016", 19 pgs.
"U.S. Appl. No. 13/800,334, Response filed Jul. 10, 2015 to Final Office Action dated Feb. 12, 2015", 8 pgs.
"U.S. Appl. No. 13/800,334, Response filed Aug. 10, 2017 to Final Office Action dated Jun. 15, 2017", 9 pgs.
"U.S. Appl. No. 13/800,334, Response filed Dec. 16, 2015 to Non Final Office Action dated Sep. 24, 2015", 16 pgs.
"U.S. Appl. No. 13/923,827, Advisory Action dated Oct. 9, 2014", 3 pgs.
"U.S. Appl. No. 13/923,827, Examiner Interview Summary dated Sep. 29, 2014", 3 pgs.
"U.S. Appl. No. 13/923,827, Final Office Action dated Jul. 28, 2014", 11 pgs.
"U.S. Appl. No. 13/923,827, Non Final Office Action dated Apr. 10, 2014", 9 pgs.
"U.S. Appl. No. 13/923,827, Notice of Allowance dated Oct. 29, 2014", 11 pgs.
"U.S. Appl. No. 13/923,827, Response filed Jul. 10, 2014 to Non Final Office Action dated Apr. 10, 2014", 13 pgs.
"U.S. Appl. No. 13/923,827, Response filed Sep. 29, 2014 to Final Office Action dated Jul. 28, 2014", 11 pgs.
"U.S. Appl. No. 13/923,827, Supplemental Notice of Allowance dated Feb. 11, 2015", 2 pgs.
"U.S. Appl. No. 13/923,827, Supplemental Notice of Allowance dated Dec. 19, 2014", 3 pgs.
"U.S. Appl. No. 14/027,340, Advisory Action dated Sep. 17, 2015", 3 pgs.
"U.S. Appl. No. 14/027,340, Final Office Action dated Jul. 8, 2015", 10 pgs.
"U.S. Appl. No. 14/027,340, Non Final Office Action dated Jan. 22, 2015", 11 pgs.
"U.S. Appl. No. 14/027,340, Non Final Office Action dated Dec. 9, 2015", 10 pgs.
"U.S. Appl. No. 14/027,340, Notice of Allowance dated May 12, 2016", 7 pgs.
"U.S. Appl. No. 14/027,340, Response filed Feb. 19, 2016 to Non Final Office Action dated Dec. 9, 2015", 13 pgs.
"U.S. Appl. No. 14/027,340, Response filed May 21, 2015 to Non Final Office Action dated Jan. 22, 2015", 14 pgs.
"U.S. Appl. No. 14/027,340, Response filed Sep. 9, 2015 to Final Office Action dated Jul. 8, 2015", 15 pgs.
"U.S. Appl. No. 14/064,970, Advisory Action dated Jan. 4, 2016", 3 pgs.
"U.S. Appl. No. 14/064,970, Final Office Action dated Oct. 19, 2015", 10 pgs.
"U.S. Appl. No. 14/064,970, Non Final Office Action dated Mar. 12, 2015", 11 pgs.
"U.S. Appl. No. 14/064,970, Non Final Office Action dated Jul. 26, 2016", 12 pgs.
"U.S. Appl. No. 14/064,970, Notice of Allowability dated Feb. 10, 2017", 2 pgs.
"U.S. Appl. No. 14/064,970, Notice of Allowability dated Feb. 17, 2017", 2 pgs.
"U.S. Appl. No. 14/064,970, Notice of Allowance dated Jan. 27, 2017", 10 pgs.
"U.S. Appl. No. 14/064,970, Response filed Jul. 8, 2015 to Non Final Office Action dated Mar. 12, 2015", 8 pgs.
"U.S. Appl. No. 14/064,970, Response filed Oct. 26, 2016 to Non Final Office Action dated Jul. 26, 2016", 14 pgs.
"U.S. Appl. No. 14/064,970, Response filed Dec. 9, 2014 to Restriction Requirement dated Oct. 9, 2014", 11 pgs
"U.S. Appl. No. 14/064,970, Response filed Dec. 15, 2015 to Final Office Action dated Oct. 19, 2015", 11 pgs.
"U.S. Appl. No. 14/064,970, Restriction Requirement dated Oct. 9, 2014", 9 pgs.
"U.S. Appl. No. 14/086,447, Notice of Allowance dated Aug. 12, 2016", 9 pgs.
"U.S. Appl. No. 14/086,447, Preliminary Amendment filed Jul. 29, 2016", 4 pgs.
"U.S. Appl. No. 14/086,447, Response filed May 4, 2016 to Restriction Requirement dateed Apr. 6, 2016", 7 pgs.
"U.S. Appl. No. 14/086,447, Restriction Requirement dated Apr. 6, 2016", 7 pgs.
"U.S. Appl. No. 14/100,134 Response Filed Apr. 14, 2016 to Restriction Requirement dated Feb. 24, 2016", 7 pgs.
"U.S. Appl. No. 14/100,134, Notice of Allowance dated Jun. 16, 2016", 14 pgs.
"U.S. Appl. No. 14/100,134, Restriction Requirement dated Feb. 24, 2016", 5 pgs.
"U.S. Appl. No. 14/105,669, Non Final Office Action dated Jan. 11, 2016", 11 pgs.
"U.S. Appl. No. 14/105,669, Non Final Office Action dated Aug. 11, 2016", 5 pgs.
"U.S. Appl. No. 14/105,669, Notice of Allowance dated Jan. 26, 2017", 7 pgs.
"U.S. Appl. No. 14/105,669, Response filed Oct. 13, 2015 to Restriction Requirement dated Sep. 8, 2015", 7 pgs.
"U.S. Appl. No. 14/105,669, Response filed Oct. 31, 2016 to Non Final Office Action dated Aug. 11, 2016", 8 pgs.

(56) **References Cited**

OTHER PUBLICATIONS

"U.S. Appl. No. 14/105,669, Restriction Requirement dated Sep. 8, 2015", 6 pgs.
"U.S. Appl. No. 14/106,669, Response filed Apr. 11, 2016 to Non Final Office Action dated Jan. 11, 2016", 11 pgs.
"U.S. Appl. No. 14/107,316, Corrected Notice of Allowance dated Jul. 11, 2016", 2 pgs.
"U.S. Appl. No. 14/107,316, Examiner Interview Summary dated Jun. 10, 2016", 3 pgs.
"U.S. Appl. No. 14/107,316, Non Final Office Action dated Mar. 24, 2016", 16 pgs.
"U.S. Appl. No. 14/107,316, Notice of Allowance dated Jun. 28, 2016", 11 pgs.
"U.S. Appl. No. 14/107,316, Notice of Non-Compliant Amendment dated Dec. 30, 2015", 3 pgs.
"U.S. Appl. No. 14/107,316, Response filed Jan. 18, 2016 to Notice of Non-Compliant Amendment dated Dec. 30, 2015", 8 pgs.
"U.S. Appl. No. 14/107,316, Response filed Jun. 13, 2016 to Non Final Office Action dated Mar. 24, 2016", 13 pgs.
"U.S. Appl. No. 14/107,316, Response filed Dec. 16, 2015 to Restriction Requirement dated Oct. 29, 2015", 8 pgs.
"U.S. Appl. No. 14/107,316, Restriction Requirement dated Oct. 29, 2015", 8 pgs.
"U.S. Appl. No. 14/159,071, Final Office Action dated May 14, 2015", 7 pgs.
"U.S. Appl. No. 14/159,071, Non Final Office Action dated Dec. 8, 2014", 14 pgs.
"U.S. Appl. No. 14/327,234, Notice of Allowance dated Jun. 22, 2017", 12 pgs.
"U.S. Appl. No. 14/327,234, Response filed May 17, 2017 to Restriction Requirement dated Apr. 6, 2017", 8 pgs.
"U.S. Appl. No. 14/327,234, Restriction Requirement dated Apr. 6, 2017", 7 pgs.
"U.S. Appl. No. 14/483,214, Examiner Interview Summary dated Apr. 12, 2017", 3 pgs.
"U.S. Appl. No. 14/483,214, Final Office Action dated Oct. 25, 2017", 11 pgs.
"U.S. Appl. No. 14/483,214, Final Office Action dated Dec. 16, 2015", 9 pgs.
"U.S. Appl. No. 14/483,214, Non Final Office Action dated May 2, 2017", 10 pgs.
"U.S. Appl. No. 14/483,214, Non Final Office Action dated Jun. 5, 2015", 8 pgs.
"U.S. Appl. No. 14/483,214, Non Final Office Action dated Oct. 6, 2016", 12 pgs.
"U.S. Appl. No. 14/483,214, Response filed Jan. 6, 2017 to Non Final Office Action dated Oct. 6, 2016", 16 pgs
"U.S. Appl. No. 14/483,214, Response filed Mar. 14, 2016 to Final Office Action dated Dec. 16, 2015", 15 pgs.
"U.S. Appl. No. 14/483,214, Response filed May 15, 2015 to Restriction Requirement dated Mar. 25, 2015", 2 pgs.
"U.S. Appl. No. 14/483,214, Response filed Jul. 31, 2017 to Non Final Office Action dated May 2, 2017", 12 pgs.
"U.S. Appl. No. 14/483,214, Response filed Sep. 2, 2015 to Non Final Office Action dated Jun. 5, 2015", 13 pgs.
"U.S. Appl. No. 14/483,214, Restriction Requirement dated Mar. 25, 2015", 6 pgs.
"U.S. Appl. No. 14/658,429, Advisory Action dated Sep. 12, 2017", 3 pgs.
"U.S. Appl. No. 14/658,429, Examiner Interview Summary dated Aug. 17, 2017", 2 pgs.
"U.S. Appl. No. 14/658,429, Examiner Interview Summary dated Dec. 26, 2017", 2 pgs.
"U.S. Appl. No. 14/658,429, Final Office Action dated Jun. 15, 2017", 7 pgs.
"U.S. Appl. No. 14/658,429, Final Office Action dated Aug. 29, 2016", 9 pgs.
"U.S. Appl. No. 14/658,429, Final Office Action dated Oct. 20, 2017", 11 pgs.
"U.S. Appl. No. 14/658,429, Non Final Office Action dated Feb. 23, 2017", 6 pgs.
"U.S. Appl. No. 14/658,429, Non Final Office Action dated Mar. 24, 2016", 7 pgs.
"U.S. Appl. No. 14/658,429, Notice of Allowance dated Feb. 9, 2018", 8 pgs.
"U.S. Appl. No. 14/658,429, Response filed Jan. 4, 2018 to Final Office Action dated Oct. 20, 2017", 20 pgs.
"U.S. Appl. No. 14/658,429, Response Filed May 19, 2017 to Non-Final Office Action dated Feb. 23, 2017", 15 pgs.
"U.S. Appl. No. 14/658,429, Response filed Aug. 11, 2017 to Final Office Action dated Jun. 15, 2017", 21 pgs.
"U.S. Appl. No. 14/658,429, Response filed Nov. 21, 2016 to Final Office Action dated Aug. 29, 2016", 14 pgs.
"U.S. Appl. No. 14/658,429, Response Filed Jun. 20, 2016 to Non-Final Office Action dated Mar. 24, 2016", 12 pgs.
"U.S. Appl. No. 14/658,429, Supplemental Response Filed Sep. 21, 2017 to Final Office Action dated Jun. 15, 2017 and Advisory Action dated Sep. 12, 2017", 25 pgs.
"U.S. Appl. No. 14/684,936, Corrected Notice of Allowance dated Sep. 22, 2016", 4 pgs.
"U.S. Appl. No. 14/684,936, Non Final Office Action dated Mar. 22, 2016", 7 pgs.
"U.S. Appl. No. 14/684,936, Notice of Allowance dated Aug. 30, 2016", 6 pgs.
"U.S. Appl. No. 14/684,936, Response filed Jun. 9, 2016 to Non Final Office Action dated Mar. 22, 2016", 8 pgs.
"U.S. Appl. No. 14/739,160, Non Final Office Action dated Jan. 16, 2018", 14 pgs.
"U.S. Appl. No. 14/739,160, Notice of Allowance dated Aug. 6, 2018", 9 pgs.
"U.S. Appl. No. 14/739,160, Response filed Apr. 16, 2018 to Non Final Office Action dated Jan. 16, 2018", 19 pgs.
"U.S. Appl. No. 14/798,809, Advisory Action dated Feb. 28, 2018", 3 pgs.
"U.S. Appl. No. 14/798,809, Corrected Notice of Allowability dated Jun. 27, 2018", 4 pgs.
"U.S. Appl. No. 14/798,809, Examiner Interview Summary dated Sep. 14, 2017", 3 pgs.
"U.S. Appl. No. 14/798,809, Final Office Action dated Dec. 29, 2017", 4 pgs.
"U.S. Appl. No. 14/798,809, Non Final Office Action dated Jun. 28, 2017", 7 pgs.
"U.S. Appl. No. 14/798,809, Notice of Allowance dated May 3, 2018", 7 pgs.
"U.S. Appl. No. 14/798,809, Preliminary Amendment filed Oct. 29, 2015", 7 pgs.
"U.S. Appl. No. 14/798,809, Response filed Feb. 21, 2018 to Final Office Action dated Dec. 29, 2017", 7 pgs.
"U.S. Appl. No. 14/798,809, Response Filed Mar. 29, 2018 to Advisory Action dated Feb. 28, 2018", 8 pgs.
"U.S. Appl. No. 14/798,809, Response filed Apr. 3, 2017 to Restriction Requirement dated Jan. 4, 2017", 8 pgs.
"U.S. Appl. No. 14/798,809, Response filed Sep. 26, 2017 to Non Final Office Action dated Jun. 28, 2017", 9 pgs.
"U.S. Appl. No. 14/798,809, Restriction Requirement dated Jan. 4, 2017", 10 pgs.
"U.S. Appl. No. 14/812,583, Non Final Office Action dated May 9, 2017", 14 pgs.
"U.S. Appl. No. 14/812,583, Preliminary Amendment filed Jul. 29, 2015", 6 pgs.
"U.S. Appl. No. 14/812,583, Response filed Mar. 16, 2017 to Restriction Requirement dated Jan. 23, 2017", 6 pgs.
"U.S. Appl. No. 14/812,583, Restriction Requirement dated Jan. 23, 2017", 8 pgs.
"U.S. Appl. No. 14/865,762, Final Office Action dated Mar. 8, 2018", 14 pgs.
"U.S. Appl. No. 14/865,762, Non Final Office Action dated Jun. 13, 2017", 13 pgs.
"U.S. Appl. No. 14/865,762, Preliminary Amendment filed Oct. 14, 2015", 6 pgs.
"U.S. Appl. No. 14/865,762, Response filed May 17, 2017 to Restriction Requirement dated Apr. 13, 2017", 8 pgs.

(56) **References Cited**

OTHER PUBLICATIONS

"U.S. Appl. No. 14/865,762, Response filed Jun. 8, 2018 to Non Final Office Action dated Mar. 8, 2018", 17 pgs.
"U.S. Appl. No. 14/865,762, Response filed Sep. 13, 2017 to Non Final Office Action dated Jun. 13, 2017", 17 pgs.
"U.S. Appl. No. 14/865,762, Restriction Requirement dated Apr. 13, 2017", 6 pgs.
"U.S. Appl. No. 14/973,057, Corrected Notice of Allowance dated May 30, 2017", 2 pgs.
"U.S. Appl. No. 14/973,057, Final Office Action dated Feb. 13, 2017", 7 pgs.
"U.S. Appl. No. 14/973,057, Non Final Office Action dated Oct. 18, 2016", 6 pgs.
"U.S. Appl. No. 14/973,057, Notice of Allowance dated Apr. 27, 2017", 7 pgs.
"U.S. Appl. No. 14/973,057, Preliminary Amendment filed Dec. 18, 2015", 7 pgs.
"U.S. Appl. No. 14/973,057, Response filed Jan. 18, 2017 to Non Final Office Action dated Oct. 18, 2016", 8 pgs.
"U.S. Appl. No. 14/973,057, Response filed Apr. 5, 2017 to Final Office Action dated Feb. 13, 2017", 9 pgs.
"U.S. Appl. No. 14/973,057, Response filed Sep. 21, 2016 to Restriction Requirement dated Jul. 29, 2016", 5 pgs.
"U.S. Appl. No. 141973,057, Restriction Requirement dated Jul. 29, 2016", 8 pgs.
"U.S. Appl. No. 15/008,528, Non Final Office Action dated Jun. 11, 2018", 13 pgs.
"U.S. Appl. No. 15/008,528, Preliminary Amendment dated Jan. 29, 2016", 8 pgs.
"U.S. Appl. No. 15/008,528, Response filed Dec. 7, 2017 to Restriction Requirement dated Oct. 12, 2017", 7 pgs.
"U.S. Appl. No. 15/008,528, Restriction Requirement dated Oct. 12, 2017", 6 pgs.
"U.S. Appl. No. 15/093,384, Preliminary Amendment filed Apr. 28, 2016", 5 pgs.
"U.S. Appl. No. 15/130,414, Non Final Office Action dated Jul. 27, 2018", 7 pgs.
"U.S. Appl. No. 15/130,414, Preliminary Amendment filed Mar. 9, 2017", 6 pgs.
"U.S. Appl. No. 15/130,414, Response filed Apr. 2, 2018 to Restriction Requirement dated Feb. 6, 2018", 7 pgs.
"U.S. Appl. No. 15/130,414, Response filed Nov. 6, 2017 to Restriction Requirement dated Sep. 20, 2017", 8 pgs.
"U.S. Appl. No. 15/130,414, Restriction Requirement dated Feb. 6, 2018", 8 pgs.
"U.S. Appl. No. 15/130,414, Restriction Requirement dated Sep. 20, 2017", 7 pgs.
"U.S. Appl. No. 15/224,741, Non Final Office Action dated Jun. 11, 2018", 10 pgs.
"U.S. Appl. No. 15/224,741, Preliminary Amendment filed Sep. 12, 2016", 8 pgs.
"U.S. Appl. No. 15/224,741, Response filed May 14, 2018 to Restriction Requirement dated Mar. 15, 2018", 8 pgs.
"U.S. Appl. No. 15/224,741, Restriction Requirement dated Mar. 15, 2018", 7 pgs.
"U.S. Appl. No. 15/267,714, Non Final Office Action dated May 10, 2017", 23 pgs.
"U.S. Appl. No. 15/267,714, Notice of Allowance dated Oct. 10, 2017", 13 pgs.
"U.S. Appl. No. 15/267,714, Preliminary Amendment filed Oct. 6, 2016", 7 pgs.
"U.S. Appl. No. 15/267,714, Response filed Feb. 28, 2017 to Restriction Requirement dated Jan. 5, 2017", 8 pgs.
"U.S. Appl. No. 15/267,714, Response filed Aug. 4, 2017 to Non Final Office Action dated May 10, 2017", 21 pgs.
"U.S. Appl. No. 15/267,714, Restriction Requirement dated Jan. 5, 2017", 5 pgs.
"U.S. Appl. No. 15/352,721, Corrected Notice of Allowance dated Apr. 27, 2017", 2 pgs.
"U.S. Appl. No. 15/352,721, Notice of Allowance dated Mar. 10, 2017", 11 pgs.
"U.S. Appl. No. 15/352,721, Preliminary Amendment filed Feb. 3, 2017", 6 pgs.
"U.S. Appl. No. 15/495,432, Non Final Office Action dated May 9, 2018", 9 pgs.
"U.S. Appl. No. 15/495,432, Preliminary Amendment filed May 17, 2017", 8 pgs.
"U.S. Appl. No. 15/495,432, Response filed Apr. 4, 2018 to Restriction Requirement dated Feb. 9, 2018", 10 pgs.
"U.S. Appl. No. 15/495,432, Restriction Requirement dated Feb. 9, 2018", 8 pgs.
"U.S. Appl. No. 15/618,331, Notice of Allowance dated Jan. 10, 2018", 10 pgs.
"U.S. Appl. No. 15/618,331, Preliminary Amendment filed Jun. 28, 2017", 6 pgs.
"U.S. Appl. No. 15/650,035, Preliminary Amendment filed Jul. 20, 2017", 6 pgs.
"U.S. Appl. No. 15/672,724, Preliminary Amendment Filed Aug. 9, 2017", 4 pgs.
"U.S. Appl. No. 15/672,724, Supplemental Preliminary Amendment filed Aug. 23, 2017", 7 pgs.
"U.S. Appl. No. 15/712,679, Preliminary Amendment filed Oct. 12, 2017", 7 pgs.
"U.S. Appl. No. 15/863,421, Preliminary Amendment Filed Mar. 13, 2018", 9 pgs.
"U.S. Appl. No. 15/875,204, Preliminary Amendment filed Mar. 8, 2018", 9 pgs.
"U.S. Appl. No. 15/878,984, Preliminary Amendment Filed Mar. 9, 2018", 8 pgs.
"U.S. Appl. No. 15/887,740, Preliminary Amendment Filed Apr. 27, 2018", 8 pgs.
"U.S. Appl. No. 15/933,576, Preliminary Amendment Filed Apr. 17, 2018", 6 pgs.
"U.S. Appl. No. 15/972,591, Preliminary Amendment Filed May 21, 2018", 6 pgs.
"Ascent Total Knee System", Biomet, Inc., (Oct. 31, 1999), 16 pgs.
"Australian Application Serial No. 2013222609, First Examiner Report dated Feb. 16, 2015", 5 pgs.
"Australian Application Serial No. 2013222609, Response filed Sep. 17, 2015 to First Examiner Report dated Feb. 16, 2015", 17 pgs.
"Comprehensive® Reverse Shoulder System", Biomet Orthopedics brochure, (2009), 8 pgs.
"Comprehensive® Reverse Shoulder System Surgical Technique", Biomet Orthopedics, (2009-2012), 48 pgs.
"Comprehensive® Reverse Shoulder System Technical Design Features", Biomet Orthopedics, (2009), 3 pgs.
"Comprehensive® Shoulder System Surgical Technique", Biomet Orthopedics brochure, (2007), 1-53.
"Comprehensive® Total Shoulder System", Biomet Orthopedics brochure, (2011), 4 pgs.
"Customized Patient Instruments, Patient specific instruments for patient specific needs", DePuy Orthopaedics, Inc., (2008), 14 pgs.
"Customized Patient Instruments, Primary Cruciate Retaining Surgical Technique for use with the Sigma® Knee System Utilizing Specialist® 2 Instrumentation", DePuy Orthopaedics, Inc., (2008), 1-23.
"Discovery® Elbow System", Biomet Orthopedics, Inc., (Nov. 30, 2007), 3 pgs.
"Discovery® Elbow System Surgical Technique", Biomet Orthopedics, Inc., (Dec. 31, 2008), 1-25.
"DURALOC® Cementless Acetabular Reconstruction", Surgical Technique brochure, DePuy International Ltd., (2007), 10 pgs.
"European Application Serial 13710642.3, Communication Pursuant to Article 94(3) EPC dated Nov. 6, 2015", 3 pgs.
"European Application Serial 13710642.3, Intention to grant mailed Jun. 17, 2016", 7 pgs.
"European Application Serial 13710642.3, Response filed Mar. 16, 2016 to Communication Pursuant to Article 94(3) EPC dated Nov. 6, 2015", 8 pgs.
"European Application Serial No. 07809326.7, Examination Notification Art. 94(3) dated Jan. 22, 2015", 6 pgs.

(56) **References Cited**

OTHER PUBLICATIONS

"European Application Serial No. 07809326.7, Extended European Search Report dated Nov. 15, 2011", 6 pgs.
"European Application Serial No. 07809326,7, Office Action dated Jan. 28, 2009", 2 pgs.
"European Application Serial No. 07809326.7, Office Action dated Dec. 2, 2011", 1 pg.
"European Application Serial No. 07809326.7, Response filed Jun. 6, 2012 to Extended European Search Report dated Nov. 15, 2011", 6 pgs.
"European Application Serial No. 07809326.7, Response filed Jul. 31, 2015 to Examination Notification Art, 94(3) dated Jan. 22, 2015", 10 pgs.
"European Application Serial No. 09731923,0, Communication Pursuant to Article 94(3) EPC dated Nov. 29, 2016", 5 pgs.
"European Application Serial No. 09731923.0, Examination Notification Art. 94(3) dated Feb. 10, 2015", 7 pgs.
"European Application Serial No. 09731923.0, Office Action dated Feb. 3, 2011", 2 pgs.
"European Application Serial No. 09731923.0, Response filed Apr. 10, 2017 to Communication Pursuant to Article 94(3) EPC dated Nov. 29, 2016", 18 pgs.
"European Application Serial No. 09731923.0, Response filed Aug. 20, 2015 to Examination Notification Art. 94(3) dated Feb. 10, 2015", 11 pgs.
"European Application Serial No. 09732174.9, Communication Pursuant to Article 94(3) dated Mar. 3, 2016", 4 pgs.
"European Application Serial No. 09732174.9, Communication Pursuant to Article 94(3) EPC dated Oct. 17, 2016", 4 pgs.
"European Application Serial No. 09732174.9, Examination Notification Art, 94(3) dated Mar. 7, 2014", 5 pgs.
"European Application Serial No. 09732174.9, Office Action dated Feb. 3, 2011", 2 pgs.
"European Application Serial No. 09732174.9, Response filed Feb. 22, 2017 to Communication Pursuant to Article 94(3) EPC dated Oct. 17, 2016", 6 pgs.
"European Application Serial No. 09732174.9, Response filed Jul. 13, 2016 to Communication Pursuant to Article 94(3) EPC dated Mar. 3, 2016", 12 pgs.
"European Application Serial No. 09732174.9, Response filed Jul. 14, 2014 to Examination Notification Art 94(3) dated Mar. 7, 2014", 6 pgs.
"European Application Serial No. 09792468.2, Communication Pursuant to Article 94(3) EPC dated Jun. 7, 2016", 4 pgs.
"European Application Serial No. 09792468.2, Examination Notification Art. 94(3) dated Jan. 29, 2015", 5 pgs.
"European Application Serial No. 09792468.2, Office Action dated Jul. 8, 2011", 2 pgs.
"European Application Serial No. 09792468.2, Response filed Jan. 9, 3012 to Office Action dated Jul. 8, 2011", 11 pgs.
"European Application Serial No. 09792468.2, Response filed May 29, 2015 to Examination Notification Art. 94(3) dated Jan. 29, 2015", 8 pgs.
"European Application Serial No. 09792468.2, Response filed Sep. 28, 2016 to Communication Pursuant to Article 94(3) EPC dated Jun. 7, 2016", 21 pgs.
"European Application Serial No. 10705064,3, Communication Pursuant to Article 94(3) EPC dated Dec. 8, 2015", 4 pgs.
"European Application Serial No. 10705064.3, Examination Notification Art. 94(3) dated Feb. 4, 2015", 6 pgs.
"European Application Serial No. 10705064.3, Office Action dated Nov. 22, 2011", 2 pgs.
"European Application Serial No. 10705064.3, Response filed Apr. 18, 2016 to Communication Pursuant to Article 94(3) EPC dated Dec. 8, 2015", 8 pgs.
"European Application Serial No. 10705064.3, Response filed Aug. 14, 2015 to Examination Notification Art. 94(3) dated Feb. 4, 2015", 9 pgs.
"European Application Serial No. 10705951.1, Communication Pursuant to Article 94(3) EPC dated Jan. 22, 2013", 7 pgs.
"European Application Serial No. 10705951.1, Communication Pursuant to Article 94(3) EPC dated May 23, 2018", 7 pgs.
"European Application Serial No. 10705951.1, Office Action dated Oct. 7, 2011", 2 pgs.
"European Application Serial No. 10705951.1, Response filed May 23, 2013 to Communication Pursuant to Article 94(3) EPC dated Jan. 22, 2013", 8 pgs.
"European Application Serial No. 12156937.0, Decision of Grant dated May 4, 2015", 2 pgs.
"European Application Serial No. 12156937.0, Examination Notification Art. 94(3) dated Dec. 11, 2013", 5 pgs.
"European Application Serial No. 12156937.0, Extended European Search Report dated Sep. 6, 2012", 9 pgs.
"European Application Serial No. 12156937.0, Response filed May 16, 2013 to Extended European Search Report dated Sep. 6, 2012", 9 pgs.
"European Application Serial No, 12156937.0, Response filed Apr. 17, 2014 to Examination Notification Art. 94(3) dated Dec. 11, 2013", 15 pgs.
"European Application Serial No. 12724475.4, Communication Pursuant to Article 94(3) EPC dated Aug. 31, 2016", 5 pgs.
"European Application Serial No. 12724475.4, Examination Notification Art, 94(3) dated Nov. 24, 2014", 7 pgs.
"European Application Serial No. 12724475.4, Office Action dated Jan. 21, 2014", 2 pgs.
"European Application Serial No. 12724475.4, Response filed Jan. 10, 2017 to Communication Pursuant to Article 94(3) EPC dated Aug. 31, 2016", 17 pgs.
"European Application Serial No. 12724475.4, Response filed Apr. 15, 2015 to Examination Notification Art. 94(3) dated Nov. 24, 2014", 9 pgs.
"European Application Serial No. 13710642.3, Amendment dated Sep. 1, 2014", 7 pgs.
"European Application Serial No. 13710642.3, Office Action dated Oct. 10, 2014", 2 pgs.
"European Application Serial No. 15739458.6, Response filed Sep. 4, 2017 to Communication pursuant to Rules 161(1) and 162 EPC dated Feb. 21, 2017", 9 pgs.
"European Application Serial No. 1617949.2, Extended European Search Report dated Mar. 22, 2017", 9 pgs.
"European Application Serial No. 16179349.2, Response filed Oct. 19, 2017 to Extended European Search Report dated Mar. 22, 2017", 17 pgs.
"European Application Serial No. 16179569.5, Extended European Search Report dated Jul. 7, 2017", 8 pgs.
"European Application Serial No. 16179569.5, Response filed Feb. 7, 2018 to Extended European Search Report dated Jul. 7, 2017", 14 pgs.
"German Application Serial No. 1120111008104, Office Action dated Oct. 18, 2017", (W/English translation of claims), 7 pgs.
"German Application Serial No. 1120111008104, Response filed Feb. 23, 2018 to Office Action dated Oct. 18, 2017", (W/ English translation of claims), 8 pgs.
"Great Britain Application Serial No. 1116054.6, Search Report dated Dec. 21, 2011", 4 pgs.
"Hand Instruments", High Performance, Precision Series brochure by Arthrotek, copyright, (2000), 3 pgs.
"Hipsextant Instructions of Use", Surgical Planning Associates, Inc., (2011), 19 pgs.
"International Application Serial No. PCT/EP2010/061630, International Search Report dated Nov. 30, 2010", 3 pgs.
"International Application Serial No. PCT/GB2007/003737, International Preliminary Report on Patentability dated Apr. 7, 2009", 8 pgs.
"International Application Serial No. PCT/GB2007/003737, Written Opinion dated Jan. 25, 2008", 7 pgs.
"International Application Serial No. PCT/US2007/013223, International Preliminary Report on Patentability dated Dec. 24, 2008", 5 pgs.
"International Application Serial No. PCT/US2007/013223, International Search Report dated Nov. 26, 2007", 3 pgs.
"International Application Serial No. PCT/US2007/013223, Written Opinion dated Nov. 26, 2007", 4 pgs.

(56) **References Cited**

OTHER PUBLICATIONS

"International Application Serial No. PCT/US2009/039507, International Preliminary Report on Patentability dated Oct. 28, 2010", 9 pgs.
"International Application Serial PCT/US2009/039507, International Search Report dated Jul. 14, 2009", 6 pgs.
"International Application Serial No. PCT/US2009/039507, Written Opinion dated Jul. 14, 2009", 7 pgs.
"International Application Serial No. PCT/US2009/039578, International Preliminary Report on Patentability dated Oct. 28, 2010", 9 pgs.
"International Application Serial No. PCT/US2009/039578, International Search Report dated Jul. 31, 2009", 6 pgs.
"International Application Serial No. PCT/US2009/039578, Written Opinion dated Jul. 31, 2009", 7 pgs.
"International Application Serial No. PCT/US2009/056670, International Preliminary Report on Patentability dated Mar. 31, 2011", 12 pgs.
"International Application Serial No. PCT/US2009/056670, International Search Report dated Mar. 2, 2010", 7 pgs.
"International Application Serial No. PCT/US2009/056670, Invitation to Pay Additional Fees and Partial Search Report dated Nov. 26, 2009".
"International Application Serial No. PCT/US2009/056670, Written Opinion dated Mar. 2, 2010", 10 pgs.
"International Application Serial No. PCT/US2009/061434, International Preliminary Report on Patentability dated May 5, 2011", 6 pgs.
"International Application Serial No. PCT/US2009/061434, International Search Report dated Feb. 2, 2010", 4 pgs.
"International Application Serial No. PCT/US2009/061434, Written Opinion dated Feb. 2, 2010", 4 pgs.
"International Application Serial No. PCT/US2010/024073, International Preliminary Report on Patentability dated Aug. 25, 2011", 8 pgs.
"International Application Serial No. PCT/US2010/024073, International Search Report dated Jun. 4, 2010", 4 pgs.
"International Application Serial No. PCT/US2010/024073, Written Opinion dated Jun. 4, 2010", 6 pgs.
"International Application Serial No. PCT/US2010/024579, International Preliminary Report on Patentability dated Sep. 1, 2011", 7 pgs.
"International Application Serial No. PCT/US2010/024579, International Search Report dated Apr. 22, 2010", 3 pgs.
"International Application Serial No. PCT/US2010/024579, Written Opinion dated Apr. 22, 2010", 5 pgs.
"International Application Serial No. PCT/US2010/024584, International Preliminary Report on Patentability dated Sep. 1, 2011", 8 pgs.
"International Application Serial No. PCT/US2010/024584, International Search Report dated Aug. 19, 2010", 6 pgs.
"International Application Serial No. PCT/US2010/024584, Written Opinion dated Aug 19, 2010", 6 pgs.
"International Application Serial No. PCT/US2010/038177, International Preliminary Report on Patentability dated Dec. 22, 2011", 10 pgs.
"International Application Serial No. PCT/US2010/038177, International Search Report dated Aug. 24, 2010", 4 pgs.
"International Application Serial No. PCT/US2010/038177, Written Opinion dated Aug. 24, 2010", 8 pgs.
"International Application Serial No. PCT/US2010/038845, International Preliminary Report on Patentability dated Jan. 5, 2012", 9 pgs.
"International Application Serial No. PCT/US2010/038845, International Search Report dated Oct. 5, 2010", 4 pgs.
"International Application Serial No. PCT/US2010/038845, Written Opinion dated Oct. 5, 2010", 7 pgs.
"International Application Serial No. PCT/US2010/050701, International Preliminary Report on Patentability dated Apr. 12, 2012", 10 pgs.
"International Application Serial No. PCT/US2010/050701, International Search Report dated Dec. 7, 2010", 6 pgs.
"International Application Serial No. PCT/US2010/050701, Written Opinion dated Dec. 7, 2010", 8 pgs.
"International Application Serial No. PCT/US2011/026333, International Preliminary Report on Patentability dated Sep. 7, 2012", 10 pgs.
"International Application Serial No. PCT/US2011/026333, International Search Report dated Aug. 9, 2011", 6 pgs.
"International Application Serial No. PCT/US2011/026333, Invitation to Pay Additional Fees mailed May 3, 2011".
"International Application Serial No. PCT/US2011/026333, Written Opinion dated Aug. 9, 2011", 8 pgs.
"International Application Serial No. PCT/US2011/026412, International Preliminary Report on Patentability dated Sep. 30, 2012", 8 pgs.
"International Application Serial No. PCT/US2011/026412, International Search Report dated May 9, 2011", 5 pgs.
"International Application Serial No. PCT/US2011/026412, Written Opinion dated May 9, 2011", 6 pgs.
"International Application Serial No. PCT/US2011/057300 , International Preliminary Report on Patentability dated May 16, 2013", 11 pgs.
"International Application Serial No. PCT/US2011/057300, International Search Report dated Mar. 5, 2012", 7 pgs.
"International Application Serial No. PCT/US2011/057300, Written Opinion dated Mar. 5, 2012", 9 pgs.
"International Application Serial No. PCT/US2012/026356, International Preliminary Report on Patentability dated Sep. 6, 2013", 8 pgs.
"International Application Serial No. PCT/US2012/026356, International Search Report dated May 8, 2012", 5 pgs.
"International Application Serial No. PCT/US2012/026356, Written Opinion dated May 8, 2012", 6 pgs.
"International Application Serial No. PCT/US2012/038351 , International Search Report dated Jul. 6, 2012", 6 pgs.
"International Application Serial No. PCT/US2012/038351, International Preliminary Report on Patentability dated Nov. 28, 2013", 9 pgs.
"International Application Serial No. PCT/US2012/038351, Written Opinion dated Jul. 6, 2012", 8 pgs.
"International Application Serial No. PCT/US2012/041893, International Search Report dated Oct. 23, 2012", 5 pgs.
"International Application Serial No. PCT/US2012/042081, International Preliminary Report on Patentability dated Jan. 3, 2014", 7 pgs.
"International Application Serial No. PCT/US2012/042081, Written Opinion dated Sep. 5, 2012", 6 pgs.
"International Application Serial No. PCT/US2012/052853, International Preliminary Report on Patentability dated Mar. 13, 2014", 14 pgs.
"International Application Serial No. PCT/US2012/052853, International Search Report dated Nov. 16, 2012", 6 pgs.
"International Application Serial No. PCT/US2012/052853, Written Opinion dated Nov. 15, 2012", 12 pgs.
"International Application Serial No. PCT/US2012/059189, International Preliminary Report on Patentability dated Apr. 24, 2014", 10 pgs.
"International Application Serial No. PCT/US2012/059189, International Search Report dated Dec. 18, 2012", 6 pgs.
"International Application Serial No. PCT/US2012/059189, Written Opinion dated Dec. 18, 2012", 9 pgs.
"International Application Serial No. PCT/US2012/060842, International Preliminary Report on Patentability dated May 8, 2014", 7 pgs.
"International Application Serial No. PCT/US2012/060842, International Search Report dated Feb. 6, 2013", 4 pgs.
"International Application Serial No. PCT/US2012/060842, Written Opinion dated Feb. 6, 2013", 5 pgs.
"International Application Serial No. PCT/US2012/060848, International Preliminary Report on Patentability dated May 8, 2014", 11 pgs.

(56) **References Cited**

OTHER PUBLICATIONS

"International Application Serial No. PCT/US2012/060848, Invitation to Pay Additional Fees mailed Feb. 6, 2013".
"International Application Serial No. PCT/US2012/060848, Written Opinion dated Apr. 12, 2013", 9 pgs.
"International Application Serial No. PCT/US2012/060853, International Preliminary Report on Patentability dated May 8, 2014", 11 pgs.
"International Application Serial No. PCT/US2012/060853, Invitation to Pay Additional Fees mailed Feb. 7, 2013", 4 pgs.
"International Application Serial No. PCT/US2012/060853, Written Opinion dated Apr. 9, 2013", 9 pgs.
"International Application Serial No. PCT/US2012/060854, International Preliminary Report on Patentability dated May 8, 2014", 8 pgs.
"International Application Serial No. PCT/US2012/060854, International Search Report dated Feb. 6, 2013", 4 pgs.
"International Application Serial No. PCT/US2012/060854, Written Opinion dated Feb. 6, 2013", 6 pgs.
"International Application Serial No. PCT/US2013/026875, International Preliminary Report on Patentability dated Sep. 4, 2014", 9 pgs.
"International Application Serial No. PCT/US2013/026875, International Search Report dated Jun. 7, 2013", 5 pgs.
"International Application Serial No. PCT/US2013/026875, Written Opinion dated Jun. 7, 2013", 8 pgs.
"International Application Serial No. PCT/US2013/057097, International Preliminary Report on Patentability dated Mar. 12, 2015", 10 pgs.
"International Application Serial No. PCT/US2013/057097, International Search Report dated Oct. 14, 2013", 6 pgs.
"International Application Serial No. PCT/US2013/057097, Written Opinion dated Oct. 14, 2013", 9 pgs.
"International Application Serial No. PC17US2013/067505, International Preliminary Report on Patentability dated May 14, 2015", 13 pgs.
"International Application Serial No. PCT/US2013/067505, International Search Report dated Apr. 14, 2014", 5 pgs.
"International Application Serial No. PCT/US2013/067505, Invitation to Pay Additional Fees dated Feb. 6, 2014", 6 pgs.
"International Application Serial No. PCT/US2013/067505, Written Opinion dated Apr. 14, 2014", 11 pgs.
"International Application Serial No. PCT/US2013/074288, International Preliminary Report on Patentability dated Jun. 25, 2015", 13 pgs.
"International Application Serial No. PCT/US2013/074288, International Search Report dated May 23, 2014", 7 pgs.
"International Application Serial No. PCT/US2013/074288, Written Opinion dated May 23, 2014", 11 pgs.
"International Application Serial No. PCT/US2014/022000, International Search Report dated Jun. 24, 2014", 3 pgs.
"International Application Serial No. PCT/US2014/022000, Written Opinion dated Jun. 24, 2014", 5 pgs.
"International Application Serial No. PCT/US2014/023655, International Search Report dated Jul. 10, 2014", 4 pgs.
"International Application Serial No. PCT/US2014/023655, Written Opinion dated Jul. 10 2014", 6 pgs.
"International Application Serial No. PCT/US2014/068131, International Search Report dated May 8, 2015", 5 pgs.
"International Application Serial No. PCT/US2014/068131, Written Opinion dated May 8, 2015", 9 pgs.
"International Application Serial No. PCT/US2015/039561, International Preliminary Report on Patentability dated Jan. 19, 2017", 8 pgs.
"International Application Serial No. PCT/US2015/039561, International Search Report dated Sep. 14, 2015", 5 pgs.
"International Application Serial No. PCT/US2015/039561, Written Opinion dated Sep. 14, 2015", 6 pgs.
"Is Subchondroplasty® Right for Me?", [Online] retrieved from the internet: <http://www.subchondroplast}'..com/about subchondroplast}'./ is subchondroplasty right for >, (Jul. 1, 2013), 1 pg.
"Japanese Application Serial No. 2011-505080, Appeal Decision dated Jun. 24, 2015", (W/ English Translation), 3 pgs.
"Japanese Application Serial No. 2011-505080, Decision of Refusal dated Nov. 27, 2013", (W/ English Translation), 4 pgs.
"Japanese Application Serial No. 2011-505080, Office Action dated Feb. 25, 2015", (W/ English Translation), 2 pgs.
"Japanese Application Serial No. 2011-505080, Office Action dated Apr. 3, 2013", (W/ English Translation), 6 pgs.
"Japanese Application Serial No. 2011-505080, Response filed Mar. 27, 2014 to Decision of Refusal dated Nov. 27, 2013", (W/ English Translation), 12 pgs.
"Japanese Application Serial No. 2011-505080, Response filed May 25, 2015 to Office Action dateed Feb. 25, 2015", No English Translation, 6 pgs.
"Japanese Application Serial No. 2011-505080, Response filed Jul. 3, 2013 to Office Action dated Apr. 3, 2013", (W/ English Translation), 11 pgs.
"Japanese Application Serial No. 2011-527885, Office Action dated Aug. 27, 2013", (English Translation), 8 pgs.
"Japanese Application Serial No. 2011-527885, Response filed Nov. 26, 2013 to Office Action dated Aug. 27, 2013", (W/ English Translation of Claims), 9 pgs.
"Japanese Application Serial No. 2013-537691, Office Action dated Feb. 10, 2015", No English Translation, 3 pgs.
"Japanese Application Serial No. 2013-537691, Office Action dated Apr. 15, 2014", (W/ English Translation), 2 pgs.
"Japanese Application Serial No. 2013-537691, Office Action dated Aug. 19, 2014", (W/ English Translation), 4 pgs.
"Japanese Application Serial No. 2013-537691, Response filed Jul. 5, 2014 to Office Action dated Apr. 15, 2014", No English Translation, 7 pgs.
"Japanese Application Serial No. 2013-537691, Response filed Dec. 19, 2014 to Office Action dated Aug. 19, 2014", No English Translation, 8 pgs.
"Japanese Application Serial No. 2014-257600, Examiners Decision of Final Refusal dated Dec. 20, 2016", (W/ English Translation), 2 pgs.
"Japanese Application Serial No. 2014-257600, Office Action dated May 24, 2016", (W/ English Translation), 5 pgs.
"Japanese Application Serial No. 2014-257600, Office Action dated Oct. 27, 2015", (W/ English Translation), 6 pgs.
"Japanese Application Serial No. 2014-257600, Response filed Jan. 20, 2016 to Office Action dated Oct. 27, 2015", (W/ English Translation of Claims), 5 pgs.
"Japanese Application Serial No. 2014-257600, Voluntary Amendment filed Dec. 19, 2014", No English Translation, 16 pgs.
"Japanese Application Serial No. 2014-511538, Office Action dated Apr. 7, 2015", (W/ English Translation), 5 pgs.
"Japanese Application Serial No. 2014-511538, Office Action dated Nov. 17, 2015", W/ English Translation, 5 pgs.
"Japanese Application Serial No. 2014-511538, Response filed Feb. 17, 2016 to Office Action dated Nov. 17, 2015", (W/ English Translation of Claims), 9 pgs.
"Japanese Application Serial No. 2014-511538, Response filed Jul. 6, 2015 to Office Action dated Apr. 7, 2015", No English Translation, 6 pgs.
"Japanese Application Serial No. 2014-558800, Office Action dated Sep. 1, 2015", (W/ English Translation), 8 pgs.
"Japanese Application Serial No. 2014-558800, Response filed Dec. 1, 2015 to Office Action dated Sep. 1, 2015", (W/ English Translation), 9 pgs.
"Japanese Application Serial No. 2014511538, Office Action dated Apr. 7, 2015", (W/ English Translation), 8 pgs.
"Knee tensor combined with laser femoral head locator", Research Disclosure, No. 507, (Jul. 2006), 903.
"Insall/Burstein II Modular Knee System", Zimmer, Inc., (1989), 20 pgs.
"Magnum™, M2a-Magnum™ Operative Technique", brochure. Biomet UK Ltd., (2008), 14 pgs.

(56) **References Cited**

OTHER PUBLICATIONS

"MAX-Ti™ Modular Protrusio Cage", Surgical Technique brochure. Biomet Orthopedics, Inc., (2006), 12 pgs.
"MAX-Ti™ Modular Protrusio Cage", Surgical Technique brochure. Biomet Orthopedics, Inc., (2003), 10 pgs.
"Method for constructing an allograft sleeve", Research Disclosure, No. 476, (Dec. 2003), 1294.
"Minimally Invasive Solution Technique—Instrumentation", The M/G Unicompartmental Knee, (2001), 4 pgs.
"MIS Minimally Invasive Solution, The M/G Unicompartmental Knee Minimally Invasive Surgical Technique", Zimmer, Inc. Nexgen Complete Knee Solution, 97-5791-02, (Aug. 14, 2008), 27 pgs.
"Nex Gen Complete Knee Solution-Intramedually Instrumentation Surgical Technique", NexGen Cruciate Retaining & Legacy Posterior Stablized Knee, (1994), 37 pgs.
"Nexgen Complete Knee Solution", Extramedullary/Intramedullary Tibial Resector: Surgical Technique, Zimmer, Inc. 97-5997-02 Rev 1, (2000), 26 pgs.
"NexGen Complete Knee Solution-Multi-Reference 4-in-1 Femoral Instrumentation-Anterior Reference Surgical Technique", (Aug. 1, 2001), 17 pgs.
"NexGen System Complete Knee Solution—Design Rationale", (date unknown), 26 pgs.
"Orthopaedic Salvage System Femoral/Tibial Augmentation", Biomet Orthopedics, Inc., Product Brochure, (2003, 2004), 12 pgs.
"OSS™ Orthopaedic Salvage System, Femoral/Tibial Augmentation", Biomet Orthopedics, Inc.,, (Mar. 31, 2004), 1-8.
"Oxford® Partial Knee", Biomet, (Feb. 2011), 8 pgs.
"Oxford® Partial Knee Microplasty® Instrumentation Surgical Technique", Biomet, (May 2011), 1-54.
"PAR 5™ Protrusio Acetabular Reconstruction System", Biomet Orthopedics, Inc., (2006), 12 pgs.
"Patient Matched PMI Implants, C.A.M.R.A. 3-D Imaging", Brochure, Biomet, Inc., Form Y-BMI-191/013191, (1991), 6 pgs.
"Proximal Tibial Replacement (MOST)", Zimmer MOST Options System Surgical Technique, (2005), 84 pgs.
"Regenerex® Porous Titanium Construct", Biomet brochure, (2011), 12 pgs.
"Regenerex® Tibial Cone Augment, Surgical Technique Addendum to the Vanguard® SSK Revision System", brochure. Biomet® Orthopedics., (Mar. 31, 2010), 1-8.
"Scorpio Single Axis Total Knee System—Passport Total Knee Instruments", Suri:iical TechniQue by Srvker Howrnedica Osteonics, (2000), 54 pgs.
"Signature™ Hip Technology Personalized Patient Care brochure", Biomet® Orthopedics., (2013), 8 pgs.
"Signature™ Personalized Patient Care", Surgical Technique Acetabular Guide System brochure, Biomet® Orthopedics, (2013), 1-13.
"Signature™ Personalized Patient Care, Surgical Technique Addendum to the Vanguard Knee System", Biomet® Orthopedics Brochure, (May 15, 2009), 1-8.
"Simple Instruments Surgical Technique for the Knee", Biomet, Inc., (2000), 4 pgs.
"Subchondroplasty"; [Online] retrieved from the Internet: <http://www.subchondroplasty.com/>, (Jul. 1, 2013), 1 pg.
"Surgical Navigation for Total Knee Arthroplasty-Believed to have been presented at the American Academy of Orthopedic Surgeons", (Feb. 2001), 24 pgs.
"Surgical Technique for the Maxim®, Ascent™ and Vanguard Tm Total Knee Systems", Microplasty™ minimally invasive knee instruments brochure, (Feb. 29, 2004), 15 pgs.
"Surgical Technique—Nexgen Complete Knee Solution for the Legacy Knee LPS-Flex Fixed Bearing Knee", Zimmer, Inc., (2004, 2007), 12 pgs.
"Taperloc Complete Hip System Surgical Technique", Biomet: Brochure 2012 REV061512, (2011), 12 pgS.
"The AGC Revision Knee System Surgical Technique", Biomet, Inc., (1997), 14 pgs.
"The Fudger™—The Ultimate Weapon in the Femoral Referencing War", Biomet, Inc., 2 pgs.
"The Oxford® Partial Knee Surgical Technique", Biomet, (Feb. 2010), 1-38.
"TruMatch™ Personalized knee replacement solutions", SIGMA® DePuy Orthopaedics, Inc, tri-fold brochure, (2009), 2 pgs.
"United Kingdom Application Serial No. 0619534.1, Search Report dated Dec. 18, 2006", (Dec. 8, 2006), 1 pg.
"United Kingdom Application Serial No. 1116054.6, Office Action dated Aug. 12, 2016", 2 pgs.
"United Kingdom Application Serial No. 1116054.6, Response filed Oct. 11, 2016 to Office Action dated Aug. 12, 2016", 12 pgs.
"United Kingdom Application Serial No. 11160546, First Examination Report dated Jun. 6, 2016", 4 pgs.
"United Kingdom Application Serial No. 1207103.1, Amendment filed Apr. 13, 2012", 9 pgs.
"United Kingdom Application Serial No. 1207103.1, Office Action dated May 14, 2015", 3 pgs.
"United Kingdom Application Serial No. 1207103.1, Office Action dated Oct. 6, 2015", 2 pgs.
"United Kingdom Application Serial No. 1207103.1, Response filed Sep. 14, 2015 to Office Action dated May 14, 2015", 22 pgs.
"United Kingdom Application Serial No. 1216577.5, Office Action dated Oct. 20, 2016", 4 pgs.
"United Kingdom Application Serial No. 1216577.5, Office Action dated Oct. 29, 2015", 4 pgs.
"United Kingdom Application Serial No. 1216577.5, Response filed Feb. 24, 2016 to Office Action dated Oct. 29, 2015", 27 pgs.
"United Kingdom Application Serial No. 1216577.5, Response filed Oct. 25, 2016 to Office Action dated Oct. 20, 2016", 24 pgs.
"United Kingdom Application Serial No. 1308746.5, Office Action dated Oct. 14, 2016", 5 pgs.
"United Kingdom Application Serial No. 1516672.1, Combined Search and Examination Report dated Oct. 22, 2015", 5 pgs.
"United Kingdom Application Serial No. 1516672.1, Office Action dated Mar. 7, 2016", 3 pgs.
"United Kingdom Application Serial No. 1516672.1, Response filed Feb. 22, 2016 to Combined Search and Examination Report dated Oct. 22, 2015", (English Translation of Claims), 37 pgs.
"United Kingdom Application Serial No. 1516672.1, Response filed Apr. 13, 2016 to Office Action dated Mar. 7, 2016", 13 pgs.
"Vanguard Complete Knee System", Biomet Othopedics, Vanguard, System Summary, (2011), 8 pgs.
"Vanguard® PFR Partial Knee Patellofemoral Replacement System", Surgical Technique, Biomet Orthopaedics,, (Aug. 31, 2010), 1-25.
"What is Subchondroplasty", [Online]. Retrieved from the Internet: <http://www.subchondroplasty.com/about subchondroplasty/what is subchondroplasty.>, (Jul. 1, 2013), 2 pgs.
"Zimmer MIS Multi-Reference 4-in-1 Femoral Instrumentation Surgical Technique", Zimmer, Inc., (2003, 2008, 2009), 48 pgs.
"Zimmer® UniSpacer® Knee System", Zimmer, Inc., (2005), 4 pgs.
Biomet, "The Oxford® Partial Knee System Surgical Technique", Biomet: Manual of the Surgical Technique, (Feb. 2010), 44 pgs.
Birnbaum, Klaus M. D, "Computer-Assisted Orthopedic Surgery With Individual Templates and Comparison to Conventional Method", SPINE vol. 26, No. 4. Lippincott Williams & Wilkins, Inc., (2001), 365-370.
Botha, Charl P, "Technical Report: DeVIDE—The Delft Visualisation and Image processing Development Environment", (May 31, 2006), 1-49.
Clohisy, John C, et al., "Periacetabular Osteotomy in the Treatment of Severe Acetabular Dysplasia", The Journal of Bone & Joint Surgery, vol. 87-A • No. 2, (2005), 7 pgs.
Cohen, Zohara A, et al., "Knee cartilage topography, thickness, and contact areas from MRI: in-vitro calibration and in-vivo measurements", Journal of the OsteoArthritis Research Society International. Osteoarthritis and Cartilage, vol. 7; No. 1, (1999), 95-109.
Deakon, "Posterior Cruciate Ligament Reconstruction Technique Using the Modular ACL/PCL Guide Rationale and Surgical Technique", Arthrotek®, a Biomet Company, (2003), 6 pgs.
Eckhoff, Donald G, et al., "Three-Dimensional Mechanics, Kinematics, and Morphology of the Knee Viewed in Virtual Reality", The Journal of Bone & Joint Surgery, vol. 81, (Dec. 4, 2005), 71-80.

(56) **References Cited**

OTHER PUBLICATIONS

Farr, J, et al., "Anteromedial Tibial Tubercle Osteotomy (Fulkerson Osteotomy)", Re-print from V. Sanchis-Alfonso (ed), Anterior Knee Pain and patellar Instability, DOI: 10.1007/978-0-85729-507-1_40, © Springer-Verlag London Limited, (2011), 9 pgs.
Farr, J, et al., "Surgical Technique for Anteromedialization of the Tibial Tubercle with the Tracker™ AMZ Guide System", Sports Medicine and Arthroscopy Review, vol. 2, No. 3, (1994), 12 pgs.
Fortin, Thomas, et al., "Precise Dental Implant Placement in Bone Using Surgical Guides in Conjunction with Medical Imaging Techniques", Journal of Oral Implantology, Clinical, vol. 26, No, 4, (2000), 300-303.
Friedman, R J, et al., "The Use of Computerized Tomography in the Measurement of Glenoid Version", Journal of Bone & Joint Surgery Am. (JBJS) 1992;74, (Aug. 1992), 1032-1037.
Genant, H K. et al "Advanced CT bone imaging in osteoporosis", Rheumatology. 47, (2008), 8 pgs.
Guldberg, et al., "3D Imaging of Tissue Integration with Porous Biomaterials", Biomaterials, 29, (Oct. 2008), 3757-3761.
Haaker, R G, et al., "Minimal-invasive navigiert implantierte unikondylare Knieendoprothese", Orthopade 2006 35: Spinger Medizin Verlag, (Sep. 13, 2006), 1073-1079.
Hafez, M A, et al., "Computer-assisted Total Knee Arthroplasty Using Patient-specific Templating", Clinical Orthopaedics and Related Research, No. 444 Lippincott Williams & Wilkins, (2006), 184-192.
Hazan, Eric J, "Computer-Assisted Orthopaedic Surgery, A New Paradigm", Techniques in Orthopaedics® vol. 18, No. 2,, (2003), 221-229.
Hitt, Kirby, et al., "Anthropometric Measurements of the Human Knee: Correlation to the Sizing of Current Knee Arthroplasty Systems", The Journal of Bone & Joint Surgery, (2003), 114-122.
Hutmacher, Dietmar W, "Scaffolds in tissue engineering bone and cartilage", Biomaterials, 21(24), (2000), 2529-2543.
Kaus, Michael R, "Automated Segmentation of MR Images of Brain Tumors", Radiology, vol. 218, No. 2,, (2001), 586-591.
Kelly, Todd C, "Role of Navigation in Total Hip Arthroplasty", The Journal of Bone & Joint Surgery(2009) vol. 91-A, Supplement 1, (2009), 153-8.
Keys, Graham W., "Reduced Invasive Approach for Oxford II Medial Unicompartmental Knee Replacement—a Preliminary Study", The Knee, (1999), 193-196.
Klein, M, "Robot assisted insertion of craniofacial implants—clinical experience", CARS 2001, Elsevier Science B.V., (2001), 133-138.
Kwon, Oh-Ryong, et al., "The Effect of Femoral Cutting Guide Design Improvements for Patient-Specific Instruments", BioMed Research International, vol. 2015, Article ID 978686; https://www.hindawi.com/journals/bmri/2015/978686/, (Apr. 20, 2015), 9 pgs.
Lombardi, Adolph, et al., "Patient-Specific Approach in Total Knee Arthroplasty", Knee Orthopedics, ORTHOSuperSite, [Online]. Retrieved from the Internet: <http://www.orthosupersite.com/view.aspx?rid=31419,>, (Sep. 1, 2008), 5 pgs.
Lynch, John A, et al, "Cartilage segmentation of 3D MRI scans of the osteoarthritic knee combining user knowledge and active contours", Medical Imaging 2000: Image Processing SPIE vol. 3979, (2000), 925-935.
MacDessi, S., et al., "Patient-specific cutting guides for total knee arthroplasty", Cochrane Database of Systematic Reviews, Issue 3. Art. No. CD012589; http://onlinelibrary.wiley.com/doi/10.1002/14651858.CD012589/full, (Mar. 13, 2017), 16 pgs.
Masatoshi, Naito, et al., "Curved Periacetabular Osteotomy for Treatment of Dysplastic Hip", Clinical Orthopaedics and Related Research, (Apr. 2005), 129-135.
Miller, et al., "Unicompartmental Knee System", The Miller/Galante Advantage; Zimmer, 11 pgs.
Miller, Nancy H, et al., "Long-term Results of the Dial Osteotomy in the Treatment of High-grade Acetabular Dysplasia", Clinical Orthopaedics and Related Research, (2005), 115-123.
Murphy, S B, et al., "The Hip Sextant: Navigation of Acetabular Component Orientation Using a Mechanical Instrument", (2009), 1 pg.
Nicholls, Paul M. D, "Trauma Grand Rounds PMI (Patient-Matched Implants)", Biomet Orthopedics, Inc.,, (Feb. 29, 2000), 1 pg.
Overhoff, H M, et al., "Total Knee Arthroplasty: Coordinate System Definition and Planning based on 3-D Ultrasound Image Volumes", CARS 2001, Elsevier Science B.V., (2001), 283-288.
Patsch, J M, et al., "Noninvasive imaging of bone microarchitecture", Annals ofthe NY Academy of Sciences, (2011), 77-87.
Portheine, F, "CT-basierte Planung und DISOS-Schablonennavigation in der Kniegelenkendoprothetik", Navigation und Robotic in der Gelenk—und Wirbelsaulenchiruqie, Kapitel 32, Springer Verlag, (2003), 262-269.
Portheine, F, et al., "Entwicklung eines klinischen Demonstrators fur die computerunterstutzte Orthopadische Chirurgie mit CT-Bildbasierten Individualschablonen, Bildverarbeitung fur die Medizin", English version: FIP ID 752773, (1998), 5 pgs.
Portheine, K, "Development of a clinical demonstrator for computer assisted orthopedic surgery with CT-image based individual templates", Computer Assisted Radiology and Surgery Elsevier Science B.V., English Version of FIP ID 752770, (1997), 944-949.
Radermacher, K, et al., "Computer Integrated Orthopaedic Surgery: Connection of Planning and Execution in Surgical Intervention", Computer-integrated surgery: technology and clinical applications, (1996), 451-463.
Radermacher, K, et al., "CT Image-Based Planning and Execution of Interventions in Orthopedic Surgery Using Individual Templates, Experimental Results and Aspects of Clinical Applications", Computer Assisted Orthopedic Surgery (CAOS), Hogrefe & Huber Publishers, (1995), 42-52.
Radermacher, K, et al., "Image Guided Orthopedic Surgery Using Individual Templates", Springer Berlin/Heidelberg, CURMed-MRCAS'97, vol. 1205, (1997), 606-615.
Radermacher, K, et al., "Technique for Better Execution of CT Scan Planned Orthopedic Surgery on Bone Structures", British Library—"The world's knowledge" 2nd Congress of ISCAS Conference, (Jun. 1995), 933-938.
Radermacher, Klaus, et al., "Computer Assisted Orthopaedic Surgery with Image Based Individual Templates", Clinical Orthopaedics and Related Research No. 354, Lippincott Williams & Wilkins, (Sep. 1998), 28-38.
Schuller-Gotzburg, P, et al., "3D-Implantatplanung und Stereolithographie-Implantatbohrschablonen", Stomatologie 101.3, (May 2004), 55-59.
Sharp, Michael S, "Patient-Specific, Resurfacing Bi-Compartmental Arthuroplasty Futuretech", Orthopaedic Product News, (Apr. 2008), 12-15.
Sisto, Domenick J, et al., "Custom Patellofemoral Arthroplasty of the Knee Surgical Technique", Journal of Bone and Joint Surgery, vol. 89-A, (2006), 214-225.
Slamin, John, et al., "Do You Have This Implant in My Size?", MDT Medical Design Technology, [Online]. Retrieved from the Internet: <http://www.mdtmag.com/scripts/ShowPR.asp?PUBCODE=046&ACCT=0007796& Issue . . . >, (Jul. 31, 2008), 3 pgs.
Steinwachs, Matthias Reinhard, "Cartilage Repair—Autologous Chondrocyte Transplantation and Autologous Matrix-induced Chondrogenesis", European Musculoskeletal Review, (2006), 65-68.
Subburaj, K, et al., "Automated 3D Geometric Reasoning in Computer Assisted Joint Reconstructive Surgery", IEEE International Conference on Automation Science and Engineering, (2009), 367-372.
Thoma, W, et al., "Endoprothetischen Versorgung des Kniegelenks auf der Basis eines 3D-computertomographischen Subtraktionversfahrens", Topic: Computer-aided orthopedic surgery. Orthopedist 2000 29: Springer Verlag W/ Original German Document, (2000), 641-644.
Tripp, et al., "A Nondestructive Prescreening Method for Bone Collagen Content Using Micro-Computed Tomography", Radiocarbon, vol. 52, (2010), 612-619.
Yasunaga, Yuji, et al., "Rotational Acetabular Osteotomy for Advanced Osteoarthritis Secondary to Dysplasia of the Hip. Surgical Technique", The Journal of Bone & Joint Surgery, (2007), 11 pgs.

(56) **References Cited**

OTHER PUBLICATIONS

"U.S. Appl. No. 13/041,883, Amendment and Response Filed Oct. 25, 2018 to Appeal Decision Mailed Sep. 13, 2018", 7 pgs.
"U.S. Appl. No. 13/041,883, Appeal Decision mailed Sep. 13, 2018", 13 pgs.
"U.S. Appl. No. 13/041,883, Examiner Interview Summary dated Oct. 29, 2018", 3 pgs.
"U.S. Appl. No. 13/088,787, Notice of Allowance dated Oct. 21, 2015", 6 pgs.
"U.S. Appl. No. 13/088,787, Response filed May 12, 2014 to Restriction Requirement dated Mar. 12, 2014", 10 pgs.
"U.S. Appl. No. 13/088,787, Response filed Aug. 20, 2015 to Final Office Action dated May 20, 2015", 9 pgs.
"U.S. Appl. No. 13/088,787, Response filed Dec. 10, 2014 to Non Final Office Action dated Sep. 11, 2014", 11 pgs.
"U.S. Appl. No. 13/674,531 Response Filed Mar. 30, 2016 to Non-Final Office Action dated Sep. 30, 2015", 10 pgs.
"U.S. Appl. No. 13/674,531, Advisory Action dated Aug. 6, 2015", 3 pgs.
"U.S. Appl. No. 13/674,531, Non Final Office Action dated Sep. 30, 2015", 8 pgs.
"U.S. Appl. No. 13/674,531, Non Final Office Action dated Dec. 1, 2014", 9 pgs.
"U.S. Appl. No. 13/674,531, Notice of Allowance dated Jun. 14, 2016", 16 pgs.
"U.S. Appl. No. 13/674,531, Response filed Mar. 2, 2015 to Non Final Office Action dated Dec. 1, 2014", 12 pgs.
"U.S. Appl. No. 13/674,531, Response filed Oct. 9, 2014 to Restriction Requirement dated Sep. 24, 2014", 3 pgs.
"U.S. Appl. No. 14/159,071, Non Final Office Action dated Sep. 30, 2015", 7 pgs.
"U.S. Appl. No. 14/159,071, Notice of Allowance dated May 27, 2016", 6 pgs.
"U.S. Appl. No. 14/159,071, Response filed Mar. 9, 2015 to Non Final Office Action dated Dec. 8, 2014", 13 pgs.
"U.S. Appl. No. 14/159,071, Response filed Aug. 14, 2015 to Final Office Action dated May 14, 2015", 11 pgs.
"U.S. Appl. No. 14/159,071, Response filed Dec. 21, 2015 to Non Final Office Action dated Sep. 30, 2015", 14 pgs.
"U.S. Appl. No. 14/798,809, Notice of Allowance dated Sep. 24, 2018", 6 pgs.
"U.S. Appl. No. 14/865,762, Non Final Office Action dated Aug. 27, 2018", 15 pgs.
"U.S. Appl. No. 14/865,762, Response filed Nov. 26, 2018 to Non Final Office Action dated Aug. 27, 2018", 18 pgs.
"U.S. Appl. No. 14/983,077, Non Final Office Action dated Jan. 4, 2018", 6 pgs.
"U.S. Appl. No. 14/983,077, Notice of Allowance dated Jun. 13, 2018", 6 pgs.
"U.S. Appl. No. 14/983,077, Preliminary Amendment filed Dec. 30, 2015", 6 pgs.
"U.S. Appl. No. 14/983,077, Response filed Apr. 4, 2018 to Non Final Office Action dated Jan. 4, 2018", 9 pgs.
"U.S. Appl. No. 15/008,528, Response Filed Sep. 11, 2018 to Non-Final Office Action dated Jun. 11, 2018", 14 pgs.
"U.S. Appl. No. 15/093,384, Restriction Requirement dated Nov. 30, 2018", 9 pgs.
"U.S. Appl. No. 15/130,414, Response fled Oct. 26, 2018 to Non Final Office Action dated Jul. 27, 2018", 13 pgs.
"U.S. Appl. No. 15/712,679, Corrected Notice of Allowability dated Nov. 15, 2018", 2 pgs.
"U.S. Appl. No. 15/712,679, Notice of Allowance dated Oct. 10, 2018", 9 pgs.
"U.S. Appl. No. 15/933,576, Notice of Allowance dated Oct. 17, 2018", 8 pgs.
"U.S. Appl. No. 15/972,591, Non Final Office Action dated Oct. 9, 2018", 5 pgs.
"C2a-Taper™ Ceramic-on-Ceramic Articulation", Surgical Technique, Biomet Orthopedics, (2007), 20 pgs.
"European Application Sereial No. 10705951.1, Response filed Oct. 2, 2018 to Communication Pursuant to Article 94(3) EPC dated May 23, 2018", 12 pgs.
"European Application Sereial No. 17188434.9, Extended European Search Report dated Aug. 30, 2018", 9 pgs.
"International Application Sereial No. PCT/US2010/028325, International Preliminary Report on Patentability dated Oct. 6, 2011", 8 pgs.
"International Application Sereial No. PCT/US2010/028325, International Search Report dated Jun. 11, 2010", 6 pgs.
"International Application Sereial No. PCT/US2010/028325, Written Opinion dated Jun. 11, 2010", 6 pgs.
"International Application Sereial No. PCT/US2012/060848, International Search Report dated Apr. 12, 2013", 6 pgs.
"Vision Acetabular Surgical TechniQue", Biomet Orthopedics, Inc brochure, (2001), 16 pgs.
U.S. Appl. No. 16/661,435, filed Oct. 23, 2019, Patient-Specific Acetabular Guides and Associated Instruments.
U.S. Appl. No. 16/547,193, filed Aug. 21, 2019, Patient Specific Alignment Guide With Cutting Surface and Laser Indicator.
U.S. Appl. No. 16/600,081, filed Oct. 11, 2019, Patient-Specific Pre-Operative Planning.
"U.S. Appl. No. 13/041,883, Corrected Notice of Allowability dated Feb. 21, 2019", 4 pgs.
"U.S. Appl. No. 13/041,883, Notice of Allowance dated Dec. 26, 2018", 7 pgs.
"U.S. Appl. No. 14/798,809, Corrected Notice of Allowability dated Jan. 17, 2019", 2 pgs.
"U.S. Appl. No. 14/865,762, Final Office Action dated Mar. 1, 2019", 13 pgs.
"U.S. Appl. No. 14/865,762, Notice of Allowance dated May 22, 2019", 9 pgs.
"U.S. Appl. No. 14/865,762, Response filed Apr. 24, 2019 to Final Office Action dated Mar. 1, 2019", 13 pgs.
"U.S. Appl. No. 15/008,528, Corrected Notice of Allowability dated Jun. 12, 2019", 5 pgs.
"U.S. Appl. No. 15/008,528, Final Office Action dated Jan. 25, 2019", 9 pgs.
"U.S. Appl. No. 15/008,528, Notice of Allowance dated Apr. 10, 2019", 8 pgs.
"U.S. Appl. No. 15/008,528, Response filed Mar. 20, 2019 to Final Office Action dated Jan. 25, 2019", 11 pgs.
"U.S. Appl. No. 15/093,384, Final Office Action dated Jun. 19,, 2019", 11 pgs.
"U.S. Appl. No. 15/093,384, Non Final Office Action dated Feb. 12, 2019", 9 pgs.
"U.S. Appl. No. 15/093,384, Response Filed Jan. 23, 2019 to Restriction Requirement dated Nov. 30, 2018", 7 pgs.
"U.S. Appl. No. 15/093,384, Response filed May 13, 2019 to Non Final Office Action dated Feb. 12, 2019", 12 pgs.
"U.S. Appl. No. 15/130,414, Non Final Office Action dated Mar. 6, 2019", 6 pgs.
"U.S. Appl. No. 15/130,414, Notice of Allowance dated Jul. 22, 2019", 6 pgs.
"U.S. Appl. No. 15/130,414, Response filed Jun. 5, 2019 to Non-Final Office Action dated Mar. 6, 2019", 6 pgs.
"U.S. Appl. No. 15/672,724, Non Final Office Action dated Jul. 1, 2019", 12 pgs.
"U.S. Appl. No. 15/672,724, Response filed Jun. 10, 2019 to Restriction Requirement dated Apr. 8, 2019", 9 pgs.
"U.S. Appl. No. 15/672,724, Restriction Requirement dated Apr. 8, 2019", 9 pgs.
"U.S. Appl. No. 16/243,883, Preliminary Amendment filed Jan. 14, 2019", 6 pgs.
"U.S. Appl. No. 16/371,850, Supplemental Preliminary Amendment filed Apr. 29, 2019", 6 pgs.
"European Application Serial No. 17188434.9, Response filed Apr. 3, 2019 to Extended European Search Report dated Aug. 30, 2018", 23 pgs.
U.S. Appl. No. 16/371,850, filed Apr. 1, 2019, Patient-Specific Femoral Guide.
U.S. Appl. No. 16/508,865, filed Jul. 11, 2019, Patient-Specific Shoulder Guide.

(56) **References Cited**

OTHER PUBLICATIONS

U.S. Appl. No. 16/243,883, filed Jan. 9, 2019, Patient-Specific Knee Alignment Guide and Associated Method.
"U.S. Appl. No. 16/508,865, Preliminary Amendment filed Aug. 15, 2019", 7 pages.
"U.S. Appl. No. 15/093,384, Examiner Interview Summary dated Sep. 3, 2019", 3 pages.
"U.S. Appl. No. 16/243,883, Supplemental Preliminary Amendment Filed Sep. 4, 2019", 6 pages.
"U.S. Appl. No. 15/130,414, Corrected Notice of Allowability dated Sep. 20, 2019", 2 pages.
"U.S. Appl. No. 15/672,724, Response filed Sep. 30, 2019 to Non-Final Office Action dated Jul. 1, 2019", 13 pages.
"U.S. Appl. No. 15/130,414, Corrected Notice of Allowability dated Oct. 9, 2019", 2 pages.
"Turkish Application Serial No. 13710642.3, Working Requirements dated Oct. 14, 2019", 1 pages.
"U.S. Appl. No. 15/911,701, Non Final Office Action dated Oct. 29, 2019", 16 pages.
"U.S. Appl. No. 15/650,035, Restriction Requirement dated Nov. 7, 2019", 9 pages.
"U.S. Appl. No. 15/672,724, Notice of Allowance dated Nov. 8, 2019", 5 pages.
"German Application Serial No. 1120111008104, Office Action dated Nov. 6, 2019", 12 pages (4 pages official copy and 8 pages English translation).
"U.S. Appl. No. 15/863,421, Restriction Requirement dated Nov. 15, 2019", 5 pages.
"U.S. Appl. No. 15/887,740, Non Final Office Action dated Dec. 20, 2019", 9 pages.
"U.S. Appl. No. 15/650,035, Response filed Jan. 2, 2020 to Restriction Requirement dated Nov. 7, 2019", 8 pages.
"German Application Serial No. 1120100039011, Response filed Dec. 16, 2019 to Office Action dated Jun. 17, 2019", 28 pages (10 pages official copy and 18 pages English translation).
Yun, "Technical Procedures for Template-Guided Surgery for Mandibular Reconstruction Based on Digital Design and Manufacturing", BioMedical Engineering OnLine, (2014), 1-20.
"U.S. Appl. No. 15/650,035, Final Office Action dated May 27, 2020", 12 pgs.
"U.S. Appl. No. 15/650,035, Response filed May 18, 2020 to Non Final Office Action dated Feb. 19, 2020", 14 pgs.
"U.S. Appl. No. 15/650,035, Response filed Jul. 24, 2020 to Final Office Action dated May 27, 2020", 15 pgs.
"U.S. Appl. No. 15/863,421, Examiner Interview Summary dated Jun. 26, 2020", 2 pgs.
"U.S. Appl. No. 15/875,204, Non Final Office Action dated Jul. 6, 2020", 25 pgs.
"U.S. Appl. No. 15/887,740, Corrected Notice of Allowability dated Jun. 22, 2020", 2 pgs.
"European Application Serial No. 19173152.0, Extended European Search Report dated Jun. 8, 2020", 9 pgs.
"U.S. Appl. No. 15/878,984, Restriction Requirement dated Jan. 13, 2020", 6 pages.
"U.S. Appl. No. 15/672,724, Corrected Notice of Allowability dated Jan. 17, 2020", 2 pages.
"U.S. Appl. No. 15/911,701, Response filed Jan. 28, 2020 to Non Final Office Action dated Oct. 29, 2019", 13 pages.
"U.S. Appl. No. 16/600,081, Preliminary Amendment filed Feb. 12, 2020", 8 pages.
"U.S. Appl. No. 15/672,724, Notice of Allowability dated Feb. 18, 2020", 4 pages.
"U.S. Appl. No. 15/650,035, Non Final Office Action dated Feb. 19, 2020", 14 pages.
"U.S. Appl. No. 16/547,193, Preliminary Amendment filed Feb. 21, 2020", 6 pages.
"U.S. Appl. No. 16/661,435, Supplemental Preliminary Amendment filed Feb. 27, 2020", 6 pages.
"German Application Serial No. 1120111008104, Response filed Feb. 27, 2020 to Office Action dated Nov. 6, 2019", with English claims., 6 pages.
"U.S. Appl. No. 15/887,740, Response filed Mar. 6, 2020 to Non Final Office Action dated Dec. 20, 2019", 10 pages.
"U.S. Appl. No. 15/911,701, Notice of Allowance dated Mar. 17, 2020", 20 pages.
"U.S. Appl. No. 15/887,740, Notice of Allowance dated Apr. 15, 2020", 5 pages.
"European Application Serial No. 16179569.5, Communication Pursuant to Article 94(3) EPC dated Apr. 21, 2020", 6 pages.
Nuchaku, "Seishinkan", Wayback Machine, [Online] Retrieved from the internet:http: www.seishinkan.com seishin sskbuki howto nunstring01.htm, (Captured on Aug. 7, 2005), 7 pages.

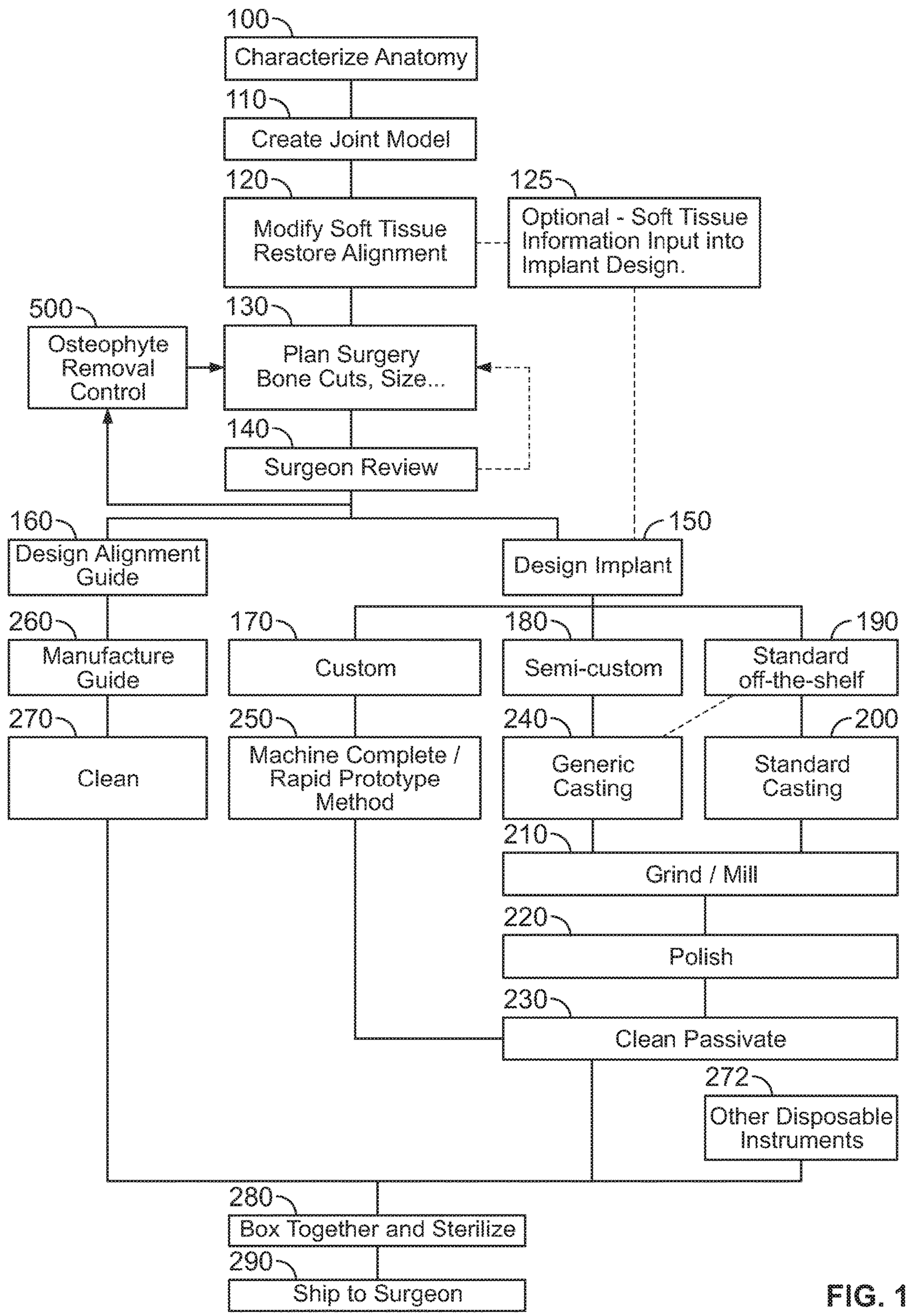
100
Characterize Anatomy
110
Create Joint Model
120
Modify Soft Tissue Restore Alignment
125
Optional - Soft Tissue Information Input into Implant Design.
500
Osteophyte Removal Control
130
Plan Surgery Bone Cuts, Size...
140
Surgeon Review
160
Design Alignment Guide
150
Design Implant
260
Manufacture Guide
170
Custom
180
Semi-custom
190
Standard off-the-shelf
270
Clean
250
Machine Complete / Rapid Prototype Method
240
Generic Casting
200
Standard Casting
210
Grind / Mill
220
Polish
230
Clean Passivate
272
Other Disposable Instruments
280
Box Together and Sterilize
290
Ship to Surgeon

FIG. 1

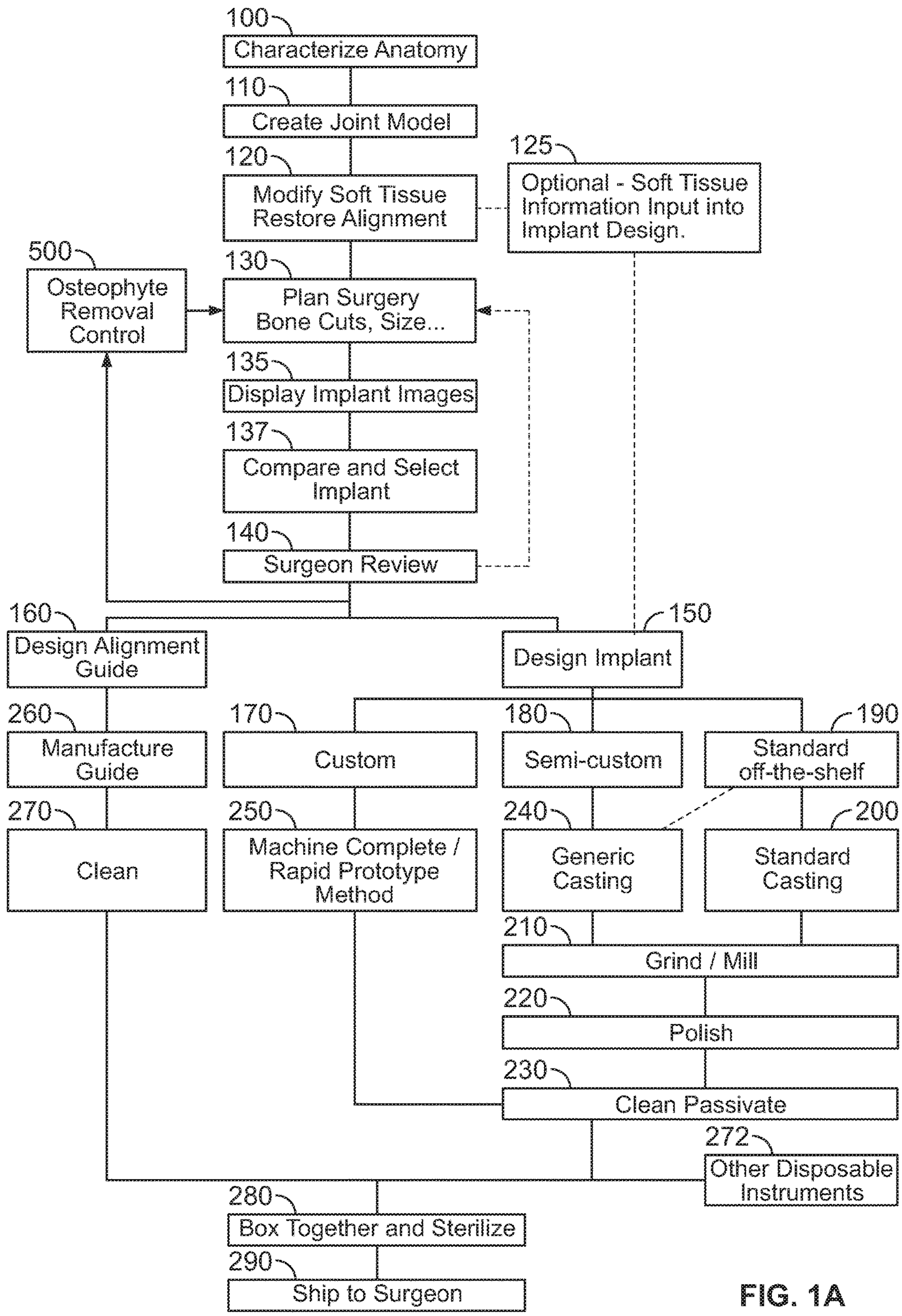
100
Characterize Anatomy
110
Create Joint Model
120
Modify Soft Tissue Restore Alignment
125
Optional - Soft Tissue Information Input into Implant Design.
500
Osteophyte Removal Control
130
Plan Surgery Bone Cuts, Size...
135
Display Implant Images
137
Compare and Select Implant
140
Surgeon Review
160
Design Alignment Guide
150
Design Implant
260
Manufacture Guide
170
Custom
180
Semi-custom
190
Standard off-the-shelf
270
Clean
250
Machine Complete / Rapid Prototype Method
240
Generic Casting
200
Standard Casting
210
Grind / Mill
220
Polish
230
Clean Passivate
272
Other Disposable Instruments
280
Box Together and Sterilize
290
Ship to Surgeon

FIG. 1A

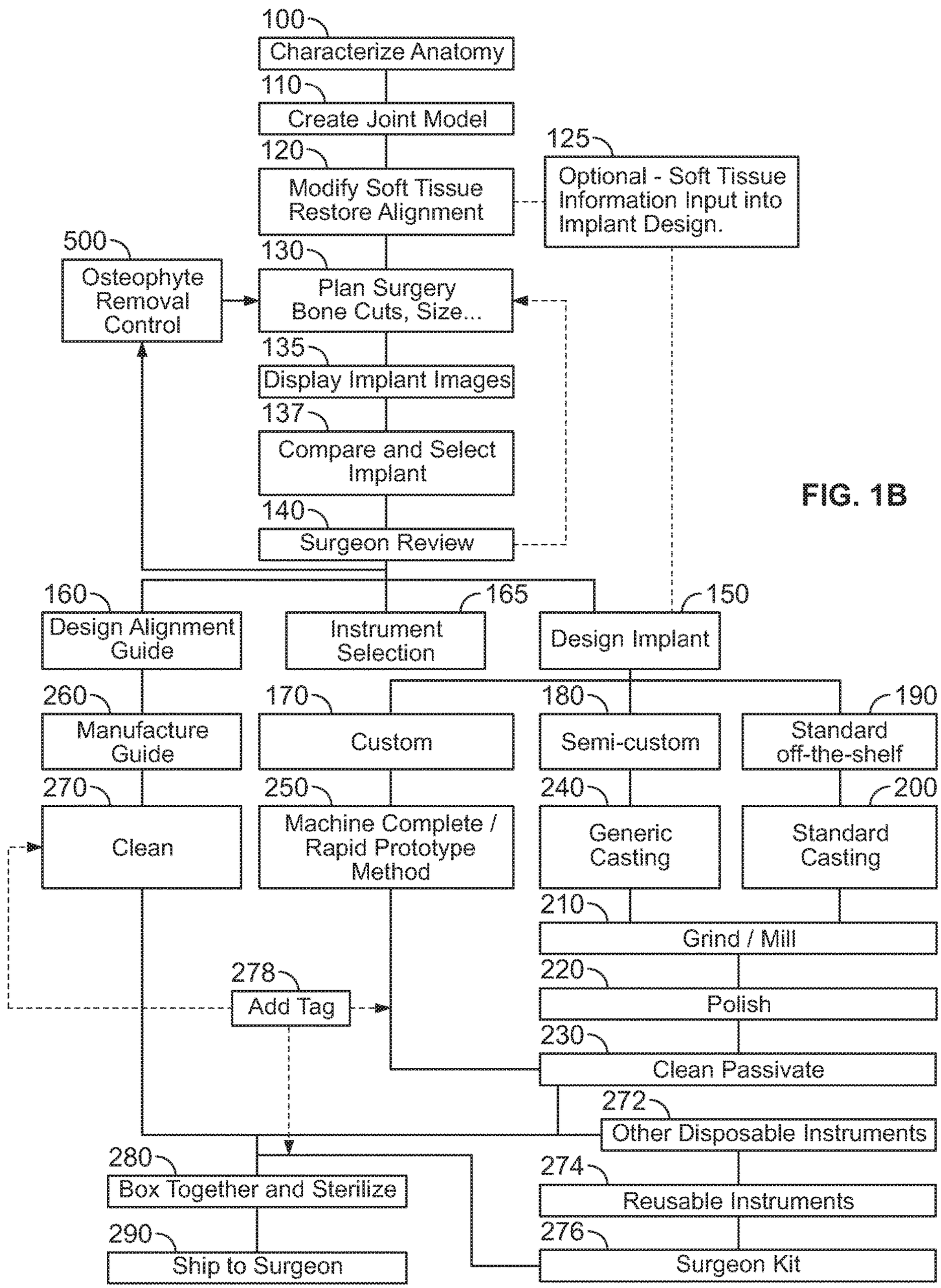
100
Characterize Anatomy
110
Create Joint Model
120
Modify Soft Tissue Restore Alignment
125
Optional - Soft Tissue Information Input into Implant Design.
500
Osteophyte Removal Control
130
Plan Surgery Bone Cuts, Size...
135
Display Implant Images
137
Compare and Select Implant
140
Surgeon Review
160
Design Alignment Guide
165
Instrument Selection
150
Design Implant
260
Manufacture Guide
170
Custom
180
Semi-custom
190
Standard off-the-shelf
270
Clean
250
Machine Complete / Rapid Prototype Method
240
Generic Casting
200
Standard Casting
210
Grind / Mill
278
Add Tag
220
Polish
230
Clean Passivate
272
Other Disposable Instruments
280
Box Together and Sterilize
274
Reusable Instruments
290
Ship to Surgeon
276
Surgeon Kit

FIG. 1B

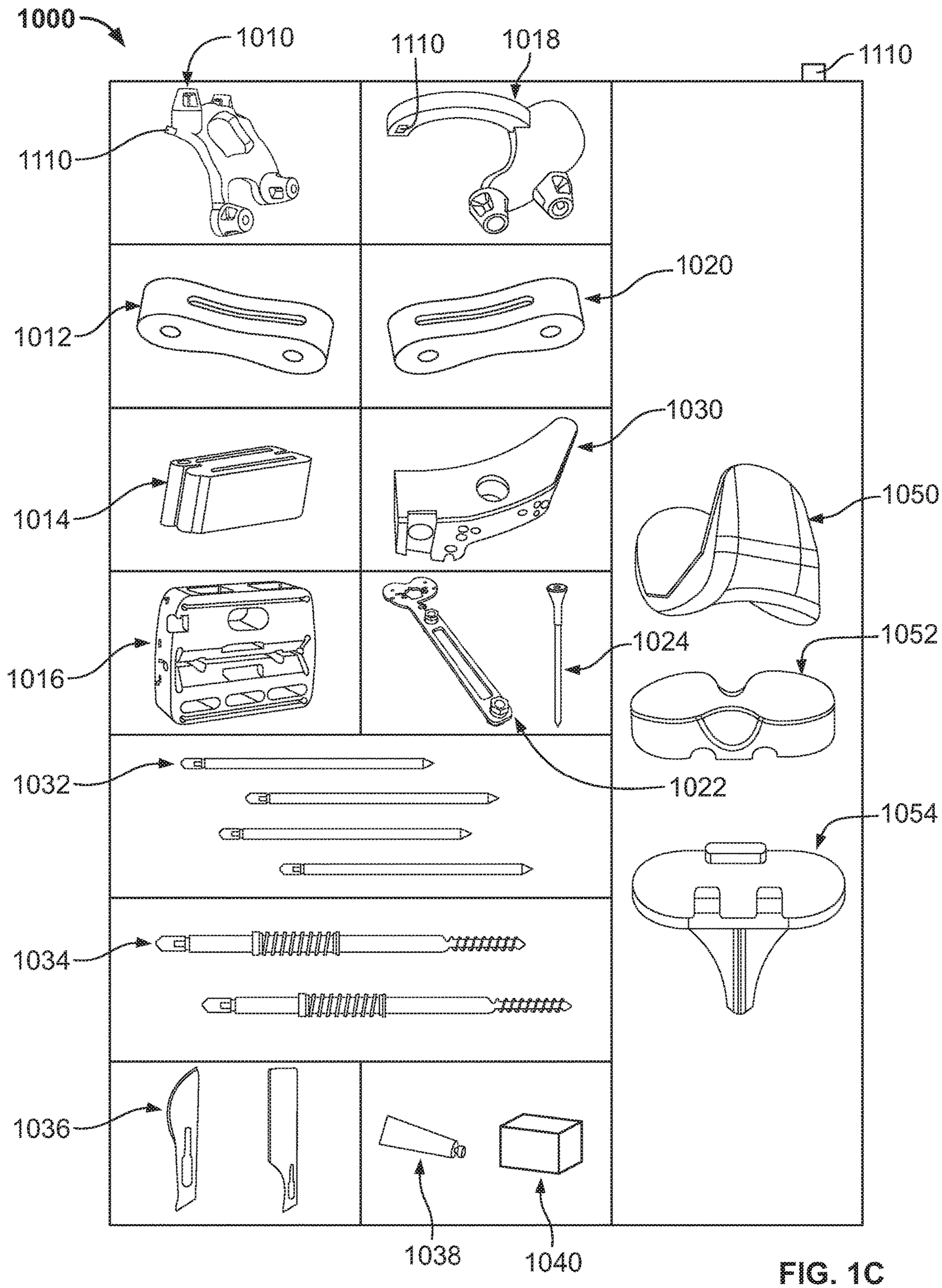
1000
1010
1110
1018
1110
1110
1020
1012
1030
1014
1050
1016
1024
1052
1032
1022
1054
1034
1036
1038
1040

FIG. 1C

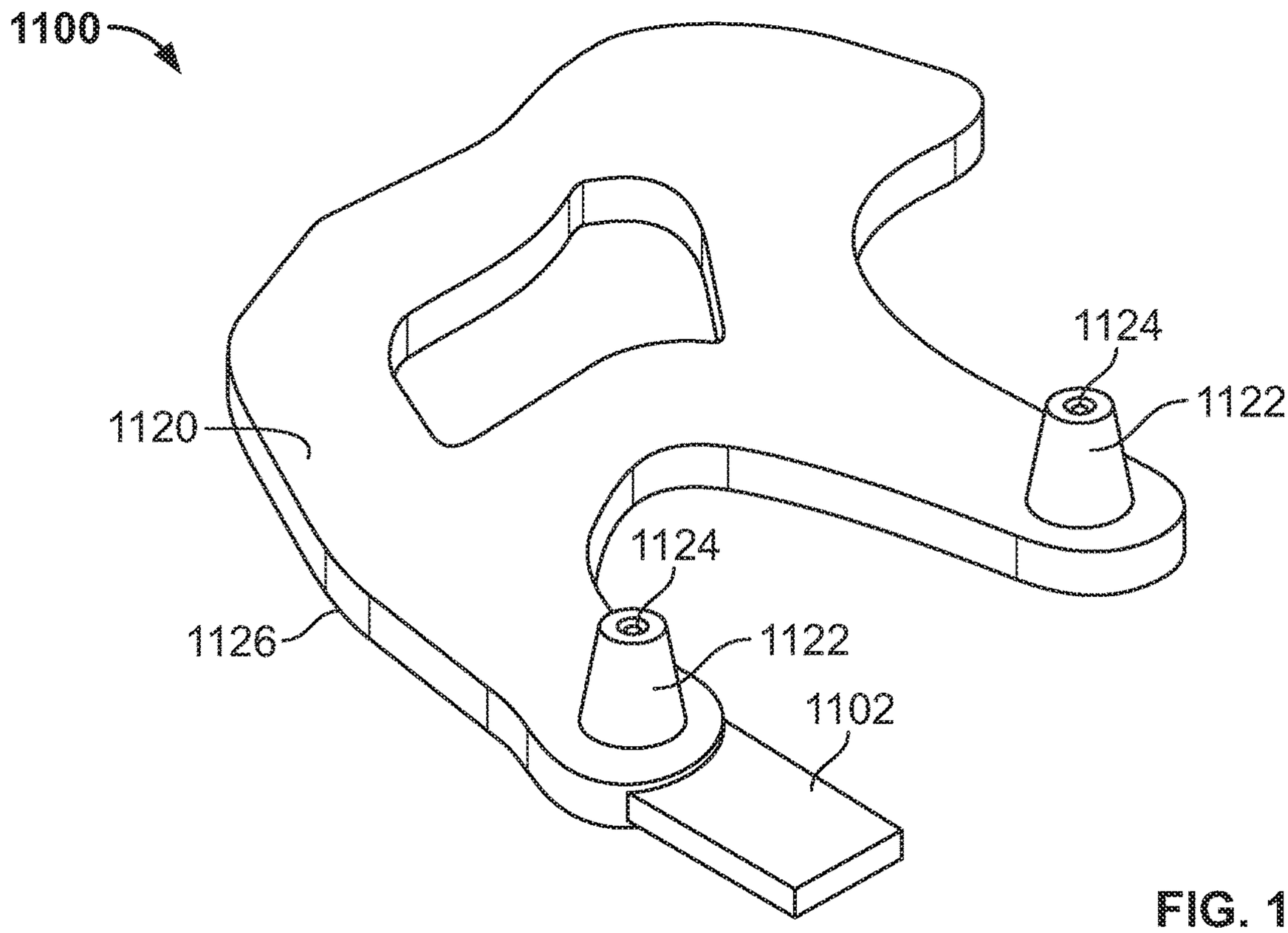
1100
1124
1122
1120
1124
1126
1122
1102

FIG. 1D

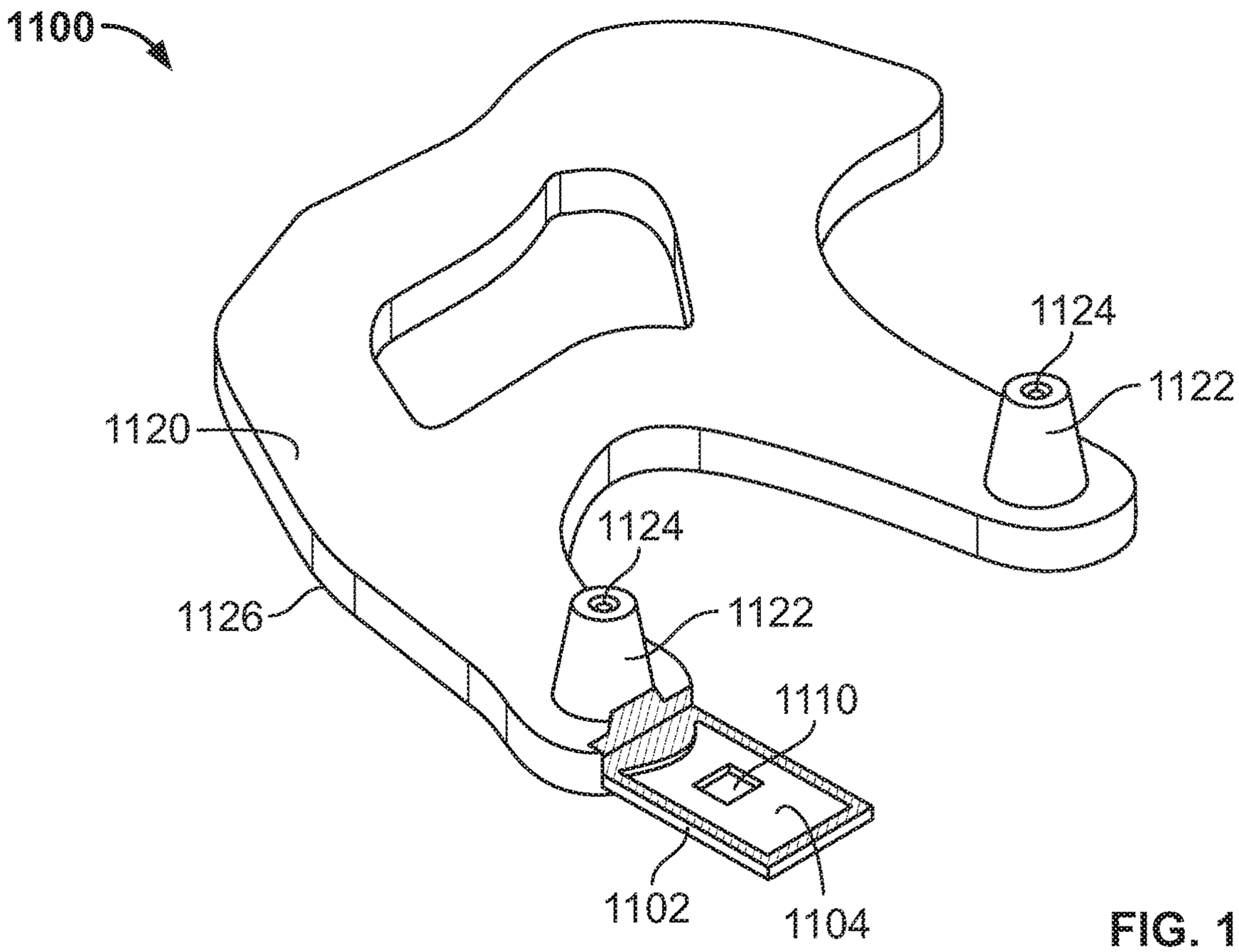
1100
1124
1122
1120
1124
1126
1122
1110
1102
1104

FIG. 1E

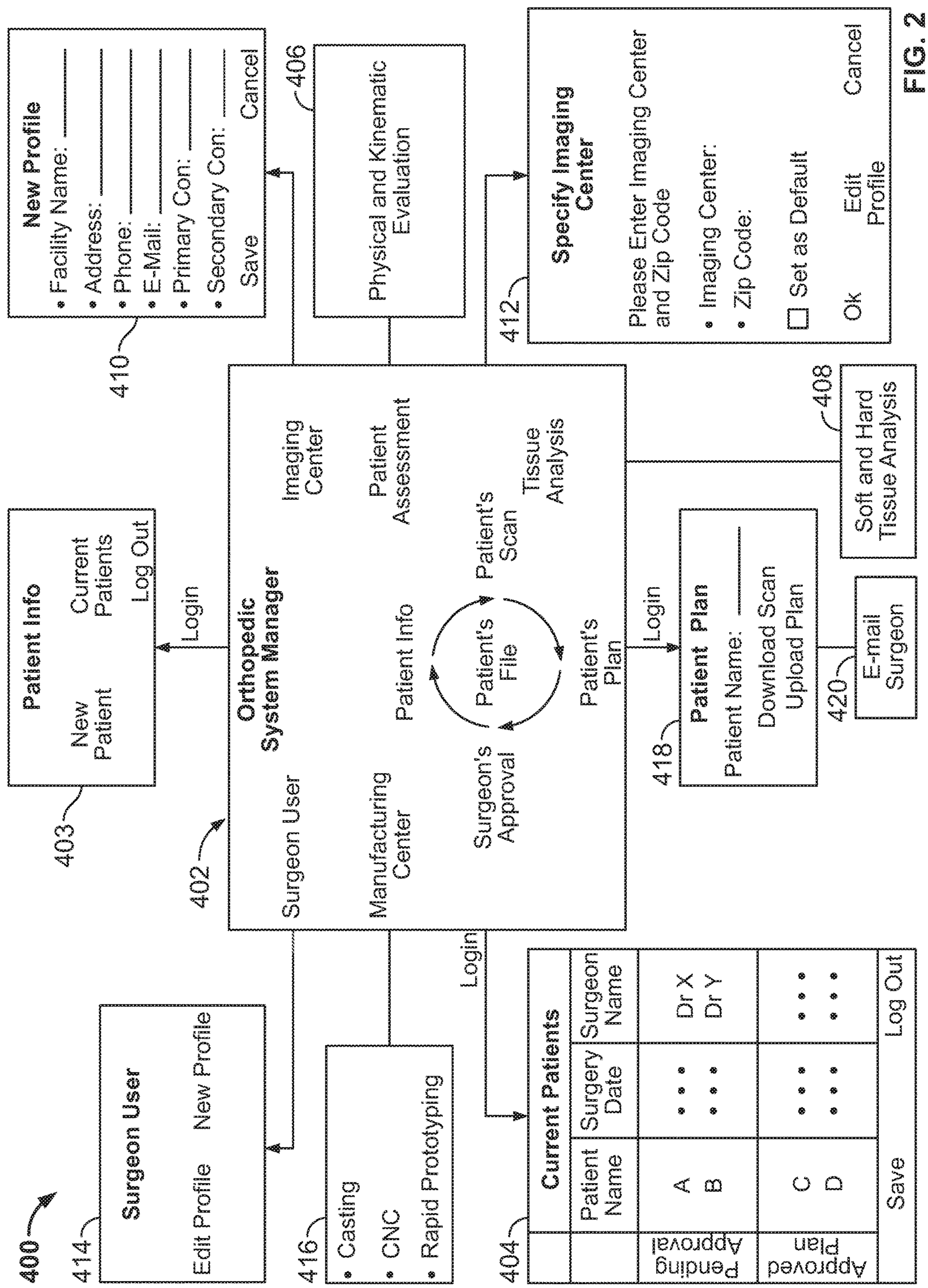
400
Patient Info
New Patient
Current Patients
Log Out
403
Login
Surgeon User
Edit Profile
New Profile
414
New Profile
• Facility Name: _____
• Address: _____
• Phone: _____
• E-Mail: _____
• Primary Con: _____
• Secondary Con: _____
Save
Cancel
410
Physical and Kinematic Evaluation
406
Specify Imaging Center
Please Enter Imaging Center and Zip Code
• Imaging Center:
• Zip Code:
☐ Set as Default
Ok
Edit Profile
Cancel
412
402
Orthopedic System Manager
Surgeon User
Imaging Center
Patient Assessment
Tissue Analysis
Patient's Scan
Patient Info
Patient's File
Patient's Plan
Surgeon's Approval
Manufacturing Center
Soft and Hard Tissue Analysis
408
Login
Patient Plan
Patient Name: _____
Download Scan
Upload Plan
418
E-mail Surgeon
420
Login
Current Patients
Patient Name
Surgery Date
Surgeon Name
Pending Approval
A
B
Dr X
Dr Y
Approved Plan
C
D
Save
Log Out
404
416
• Casting
• CNC
• Rapid Prototyping

FIG. 2

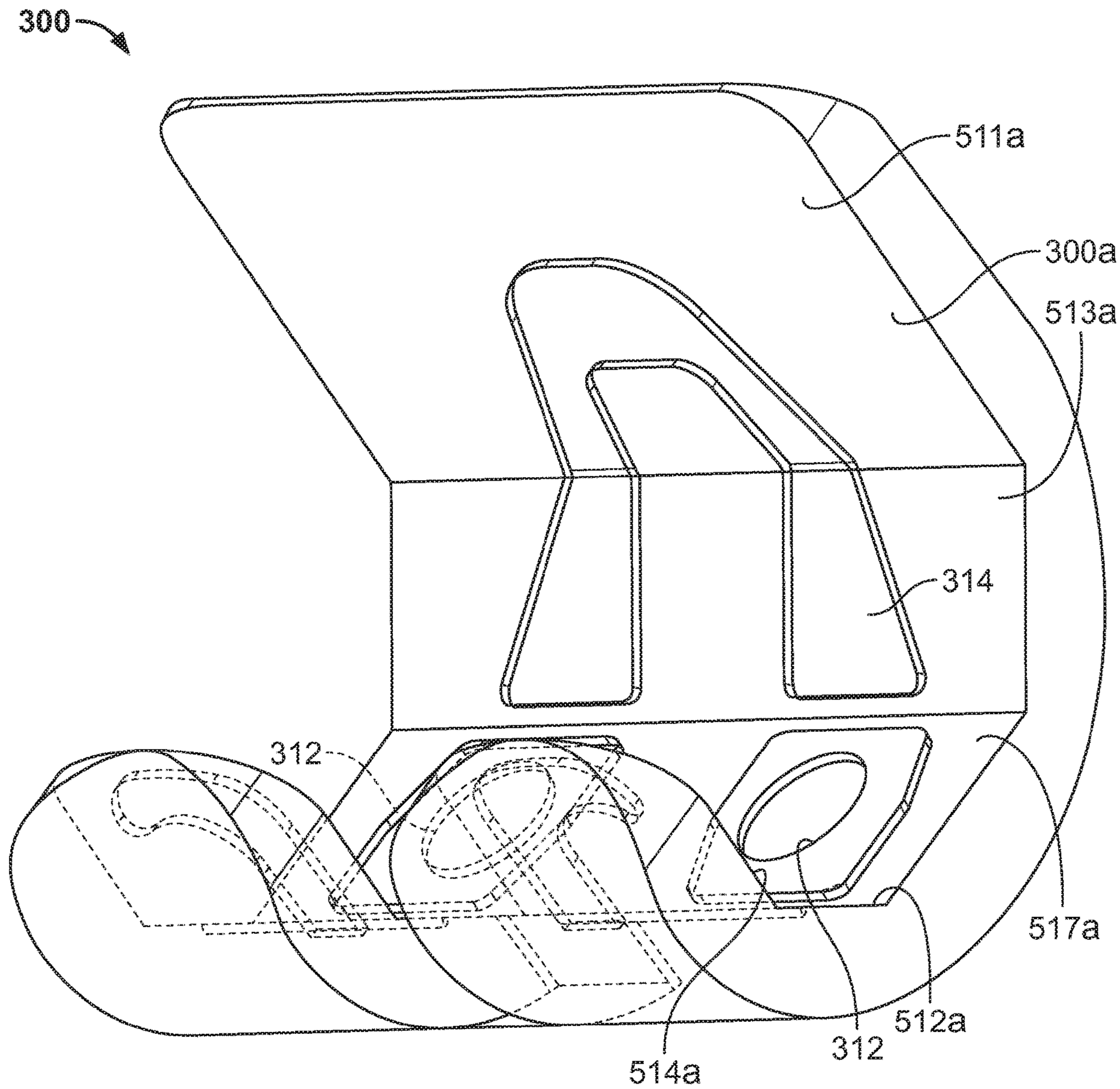


FIG. 3

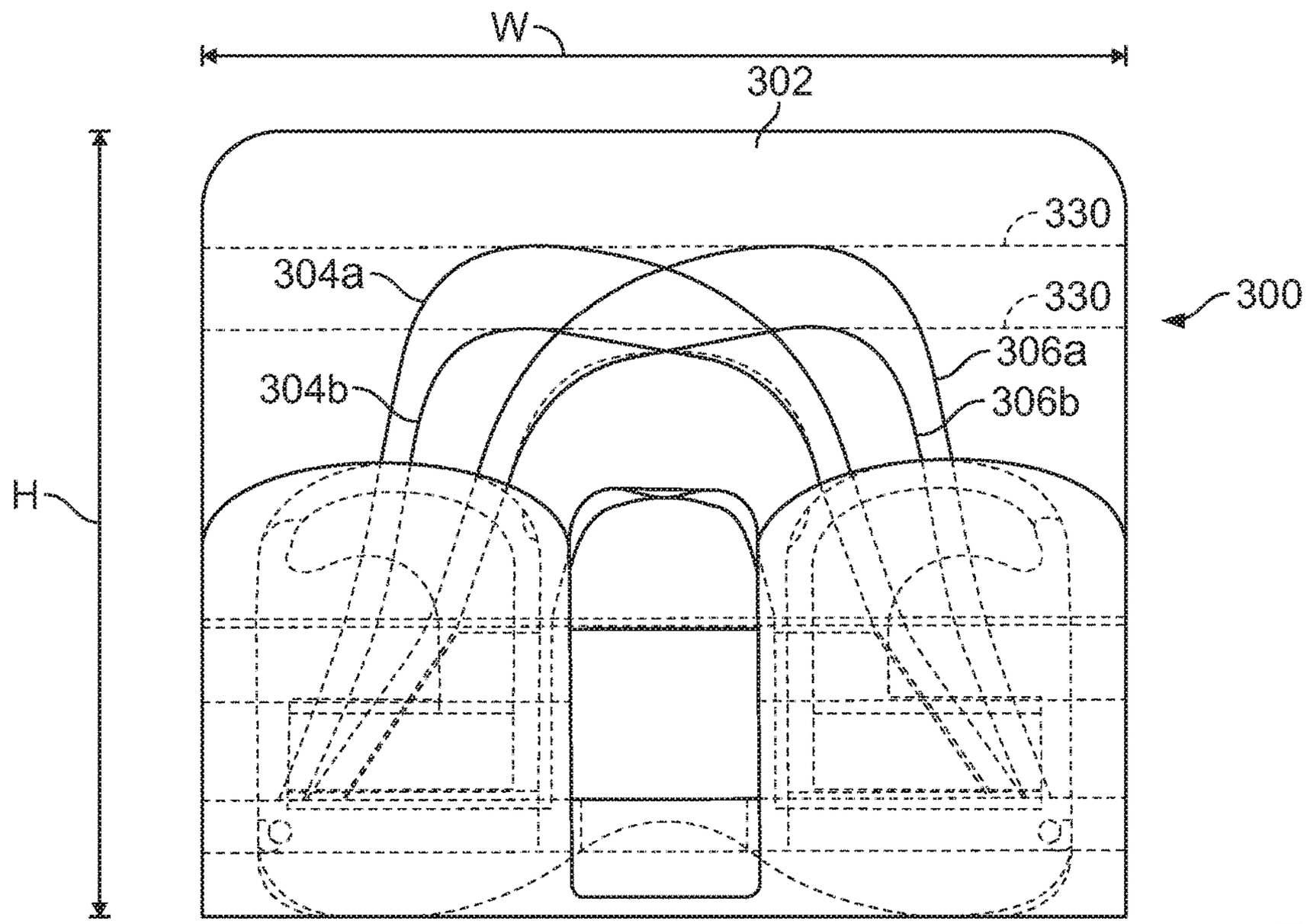
W
302
330
304a
330
300
306a
304b
306b
H

FIG. 4

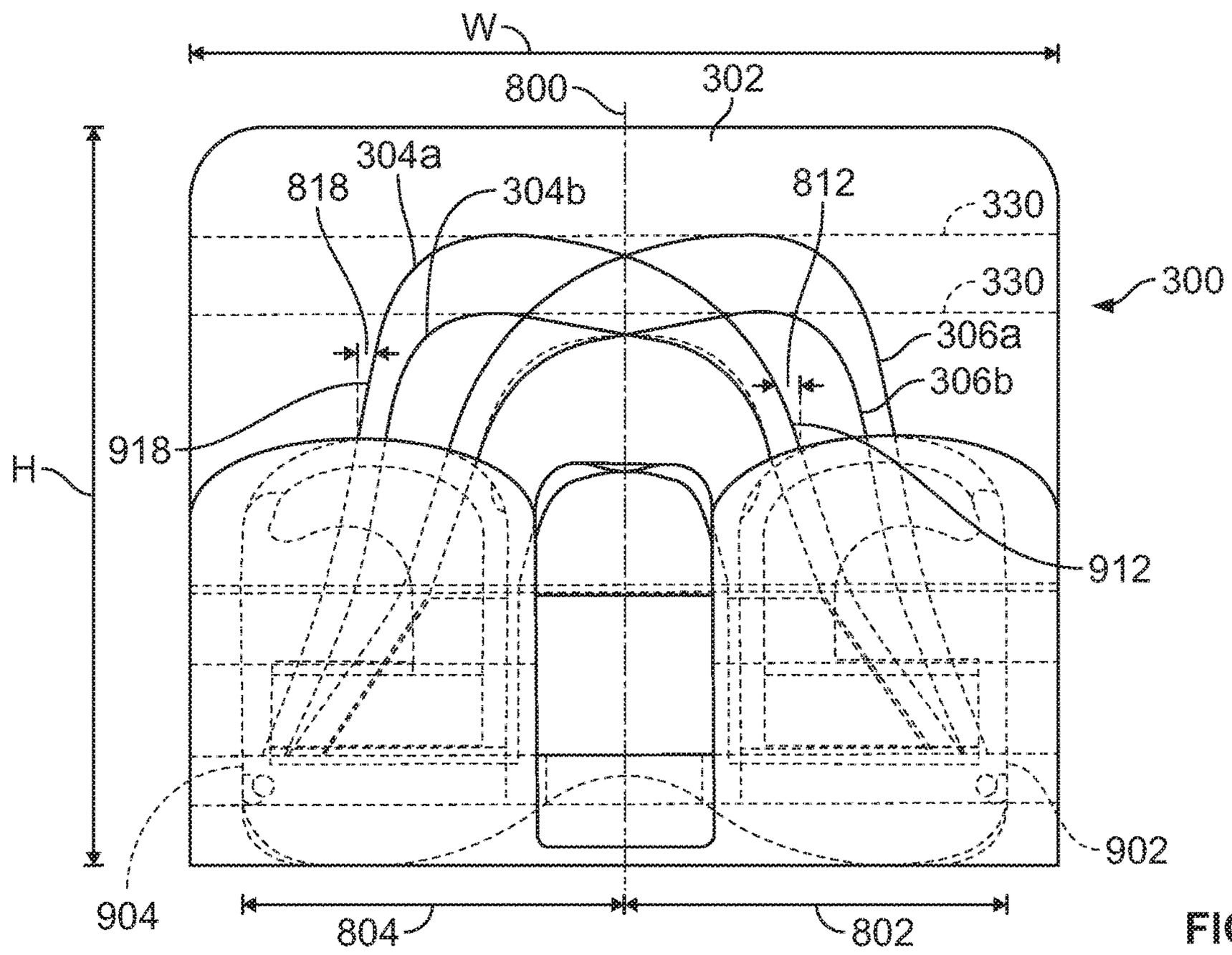
W
800
302
304a
818
304b
812
330
330
300
306a
306b
918
H
912
902
904
804
802

FIG. 4A

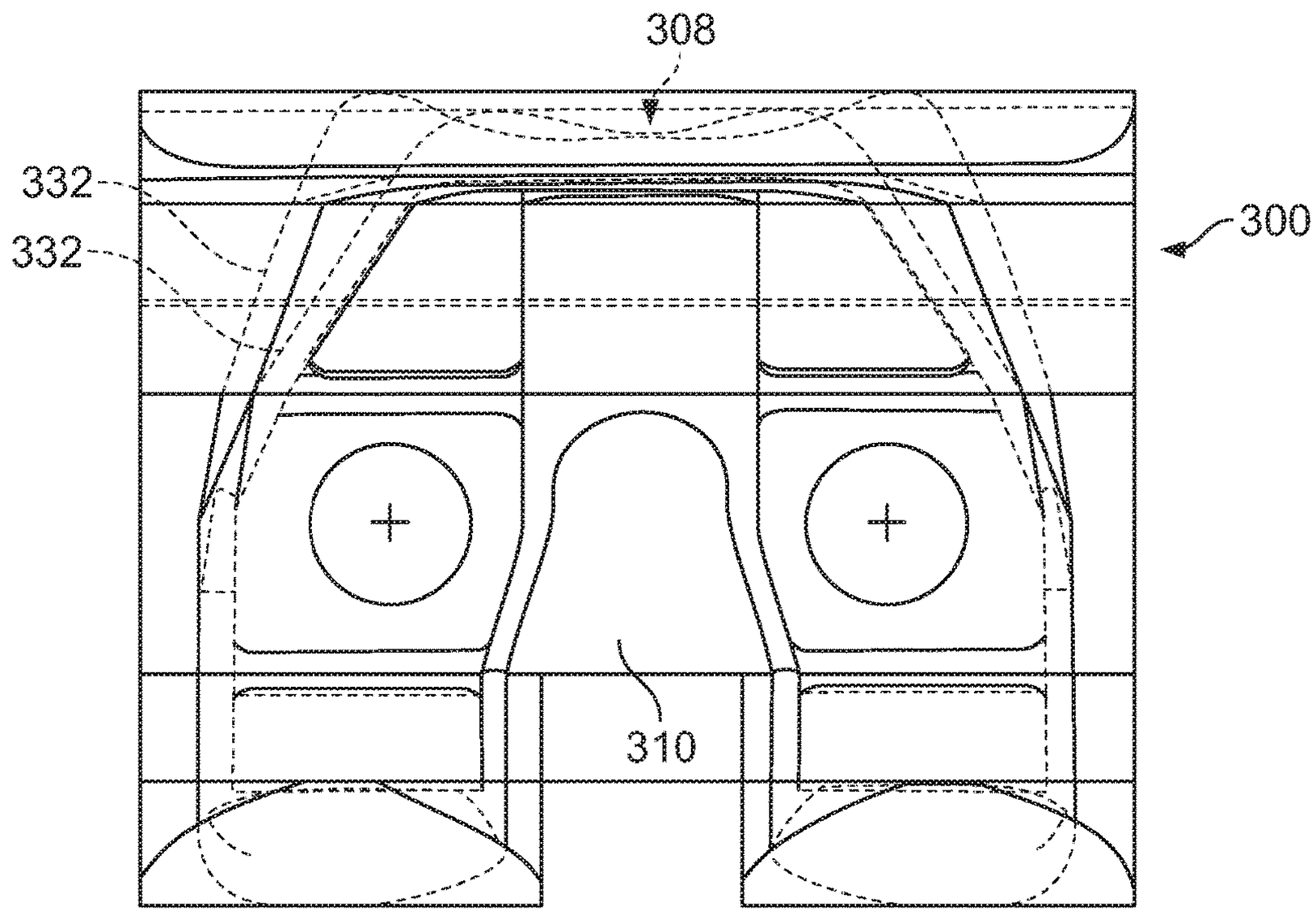
308
332
332
300
310

FIG. 5

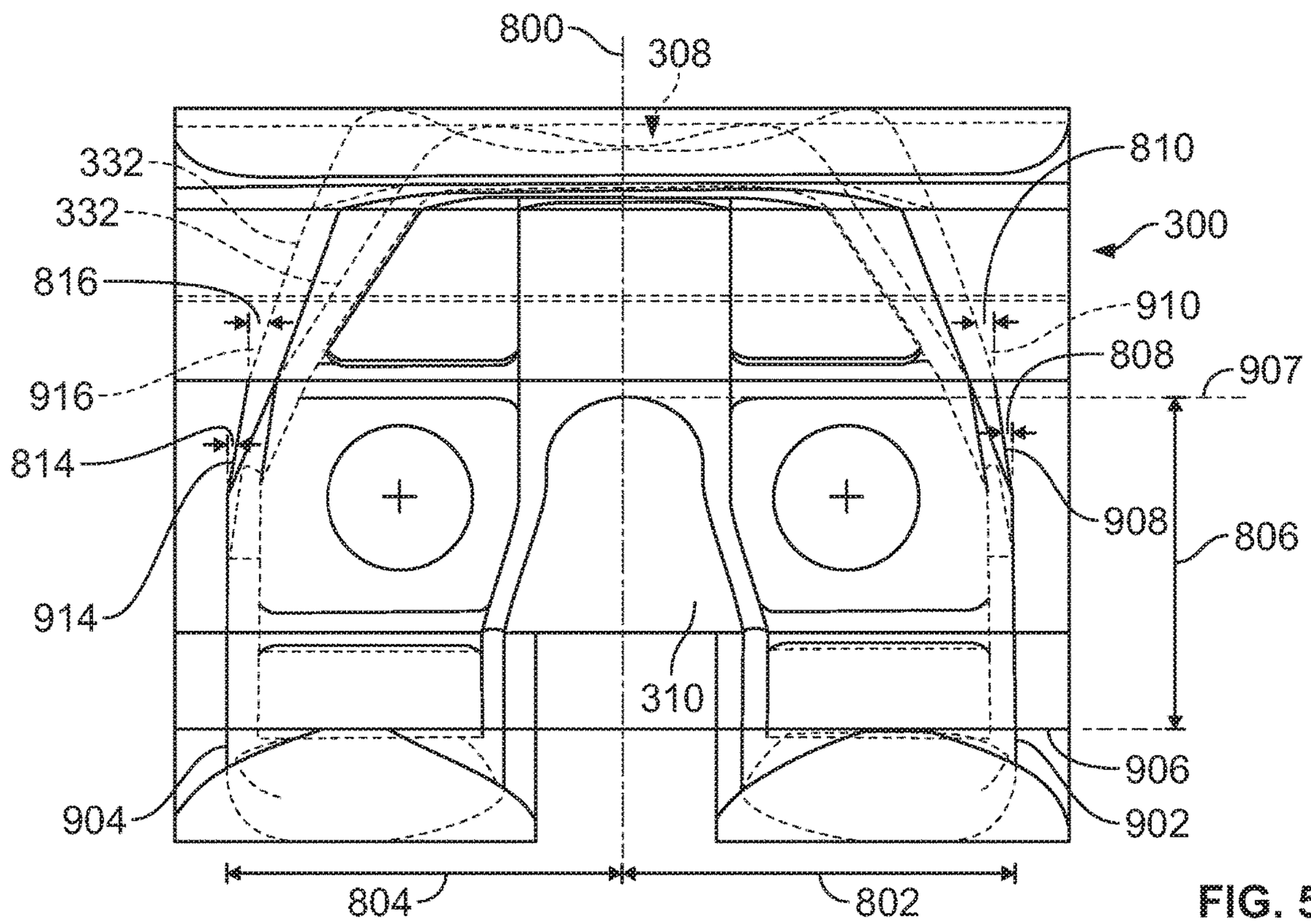
800
308
332
332
810
300
816
910
808
907
916
814
908
806
914
310
906
904
902
804
802

FIG. 5A

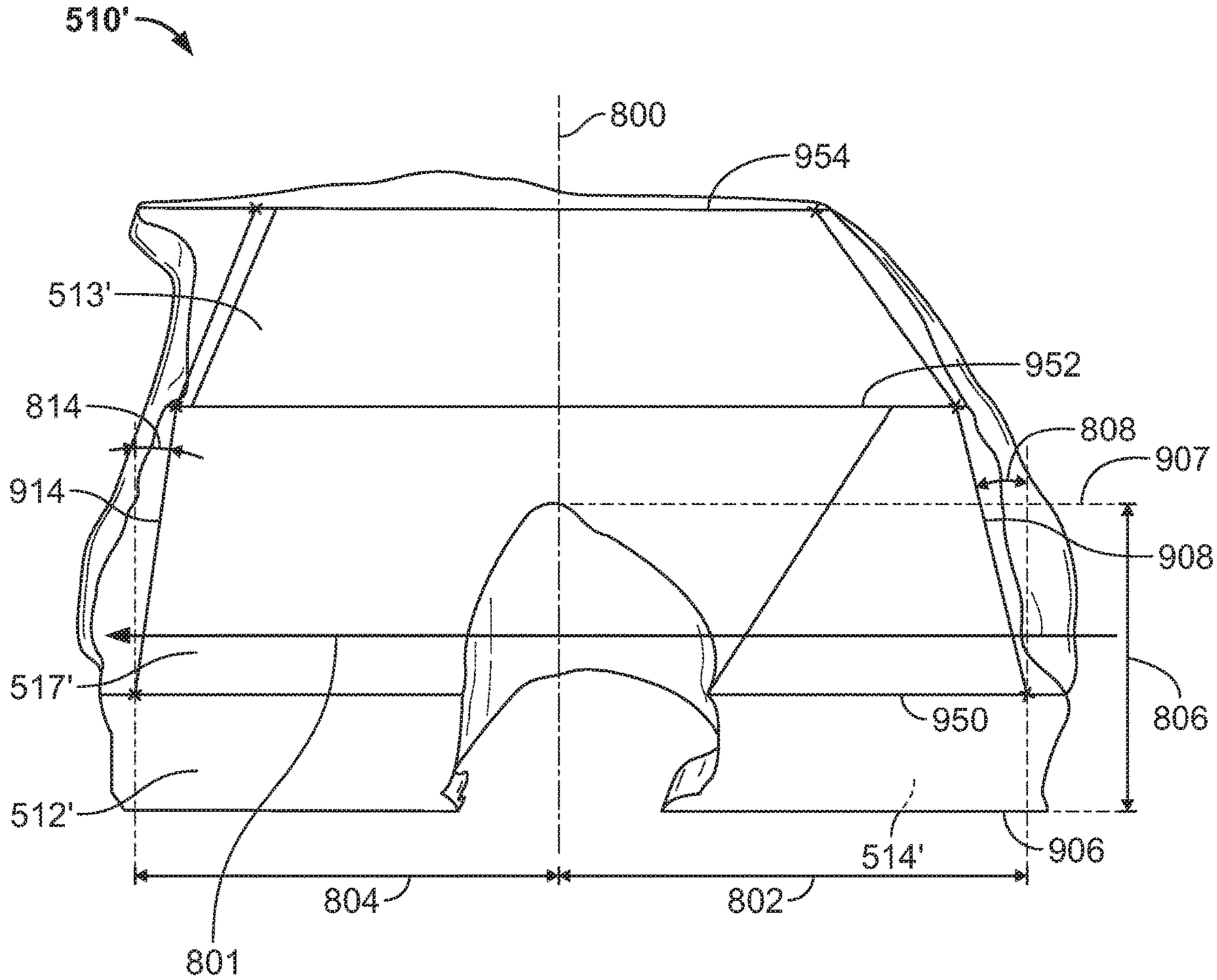
510'
800
954
513'
952
814
808
907
914
908
517'
950
806
512'
514'
906
804
802
801

FIG. 5B

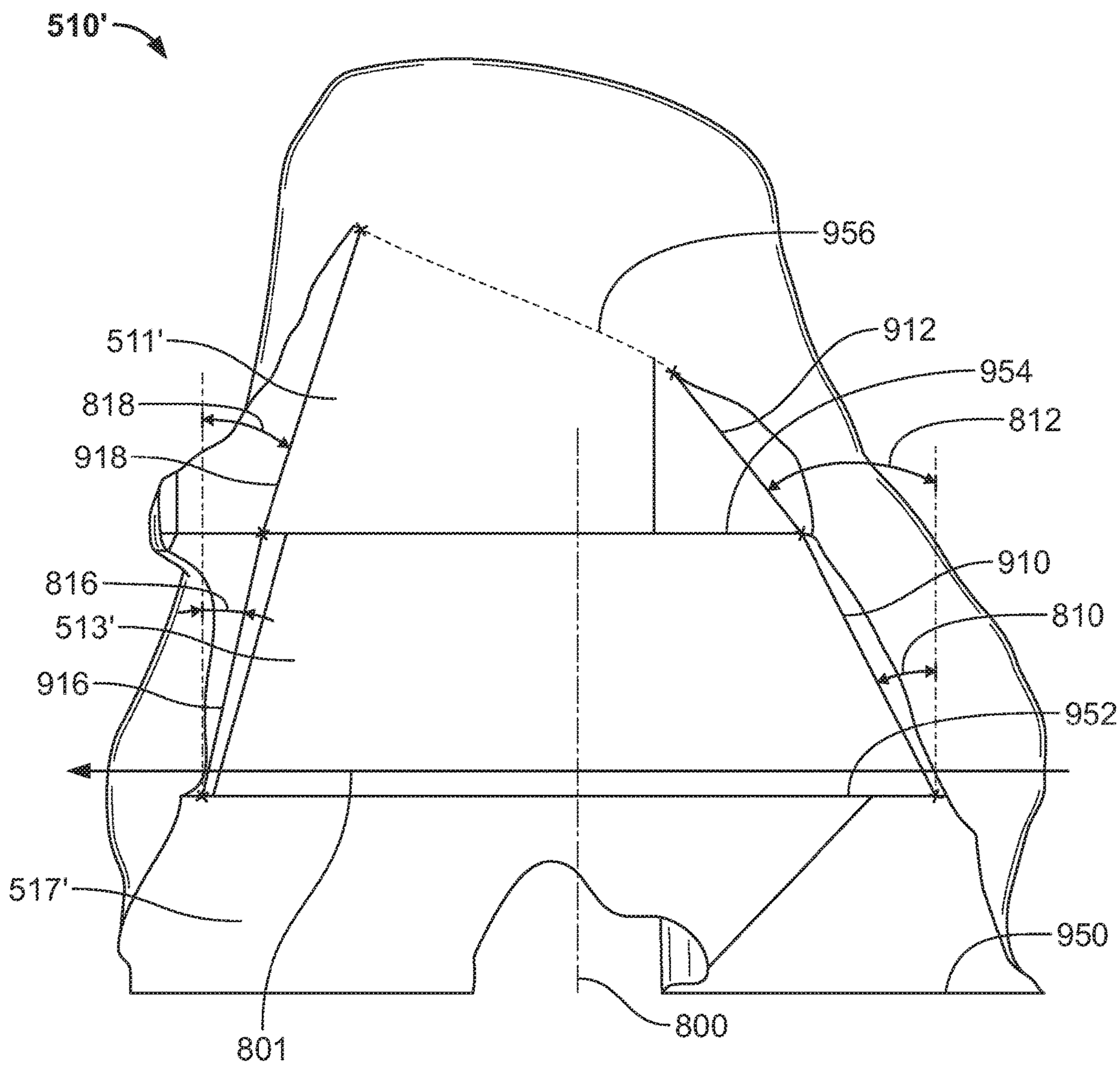
510'
956
912
954
812
511'
818
918
910
816
810
513'
916
952
517'
950
801
800

FIG. 5C

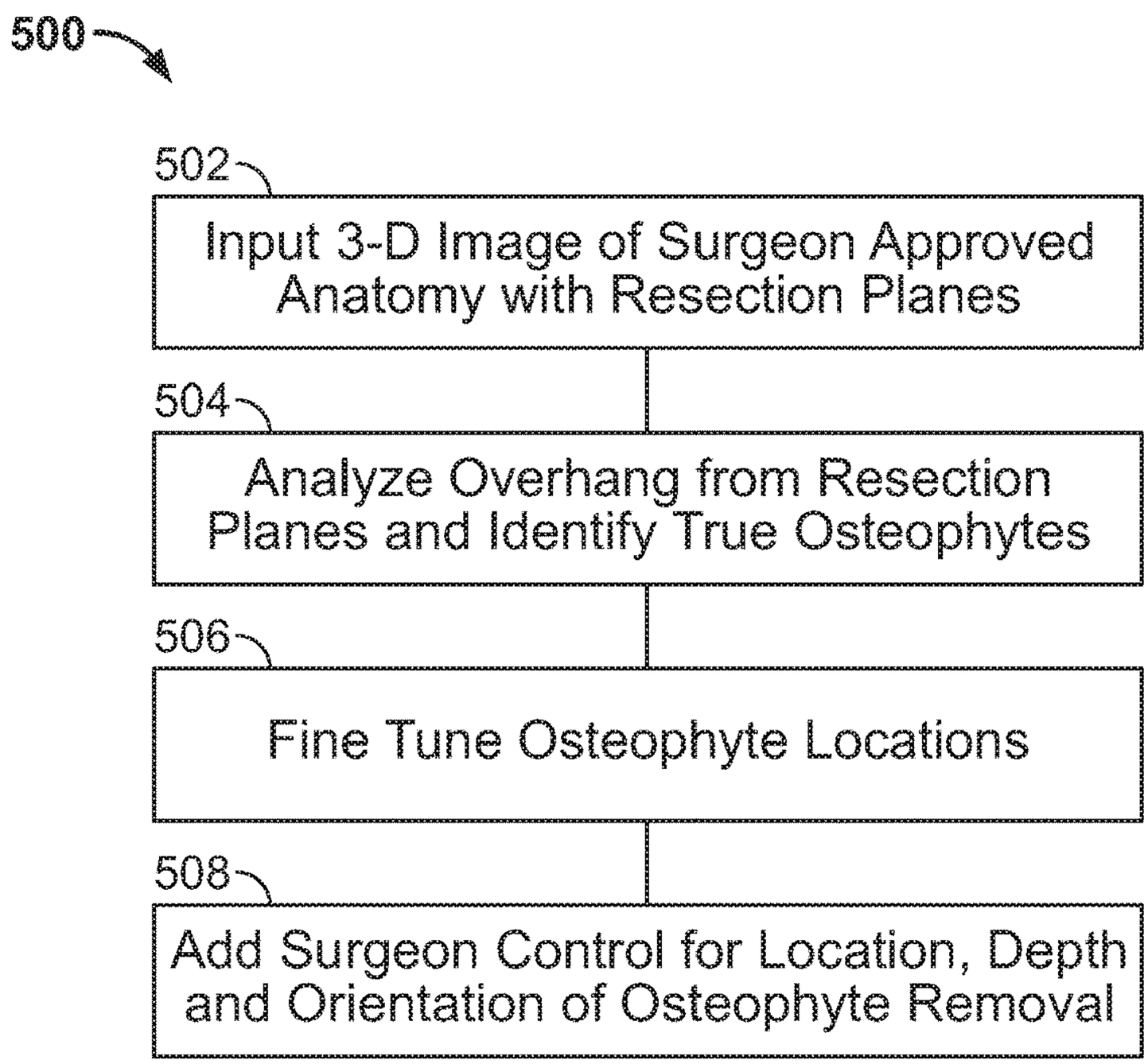
500
502
Input 3-D Image of Surgeon Approved Anatomy with Resection Planes
504
Analyze Overhang from Resection Planes and Identify True Osteophytes
506
Fine Tune Osteophyte Locations
508
Add Surgeon Control for Location, Depth and Orientation of Osteophyte Removal

FIG. 6

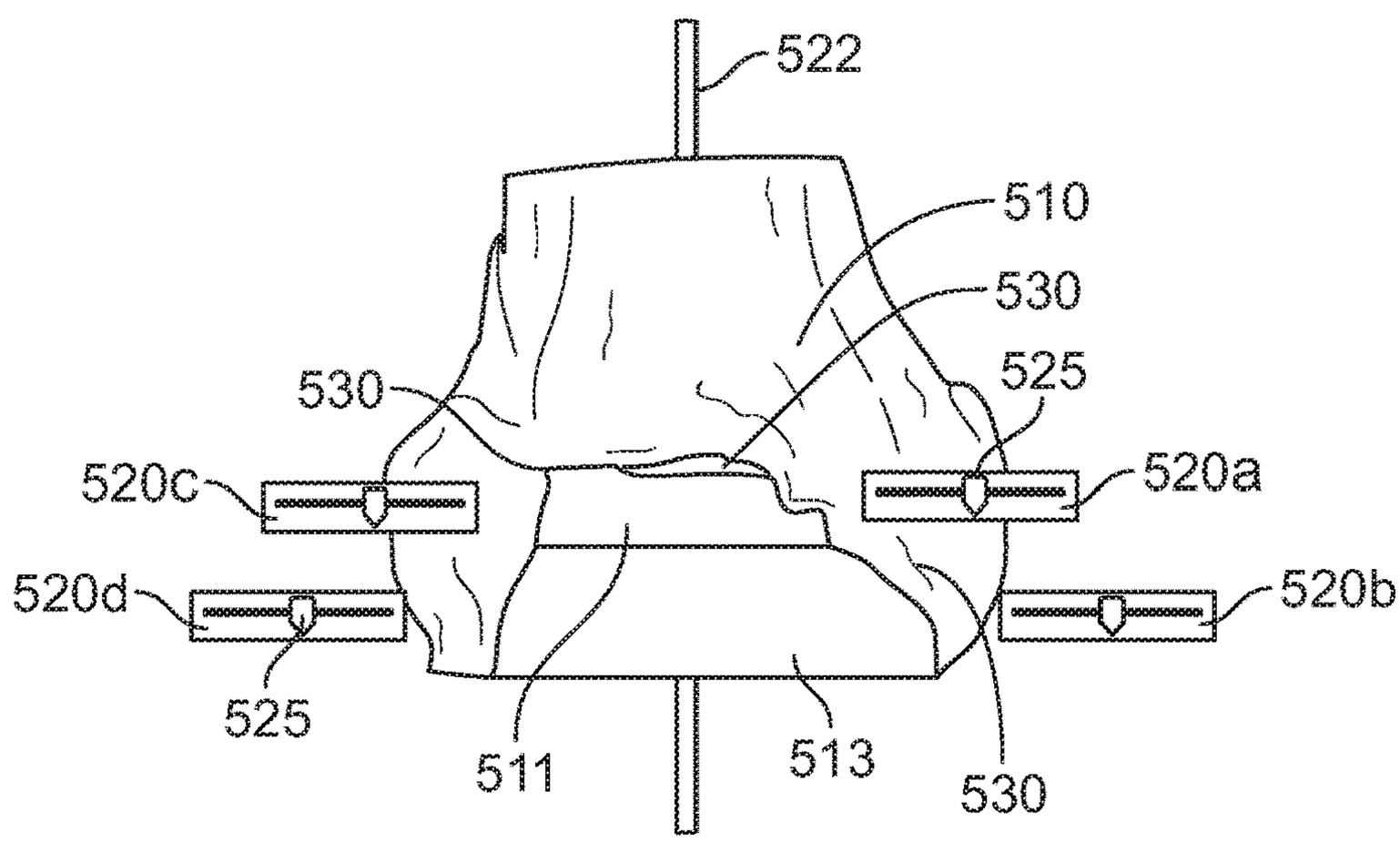
522
510
530
525
530
520c
520a
520d
520b
525
511
513
530

FIG. 7

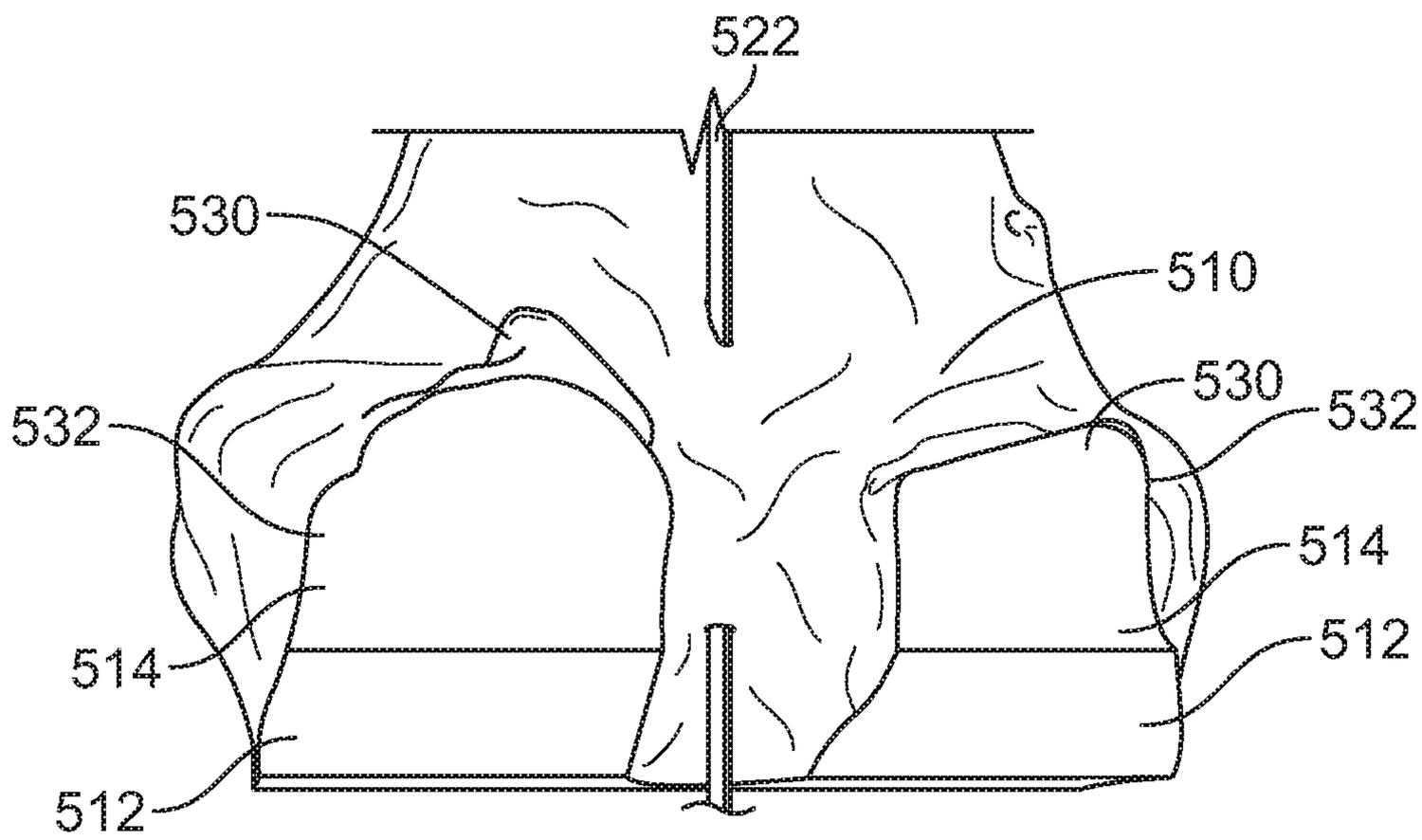
522
530
510
530
532
532
514
514
512
512

FIG. 8

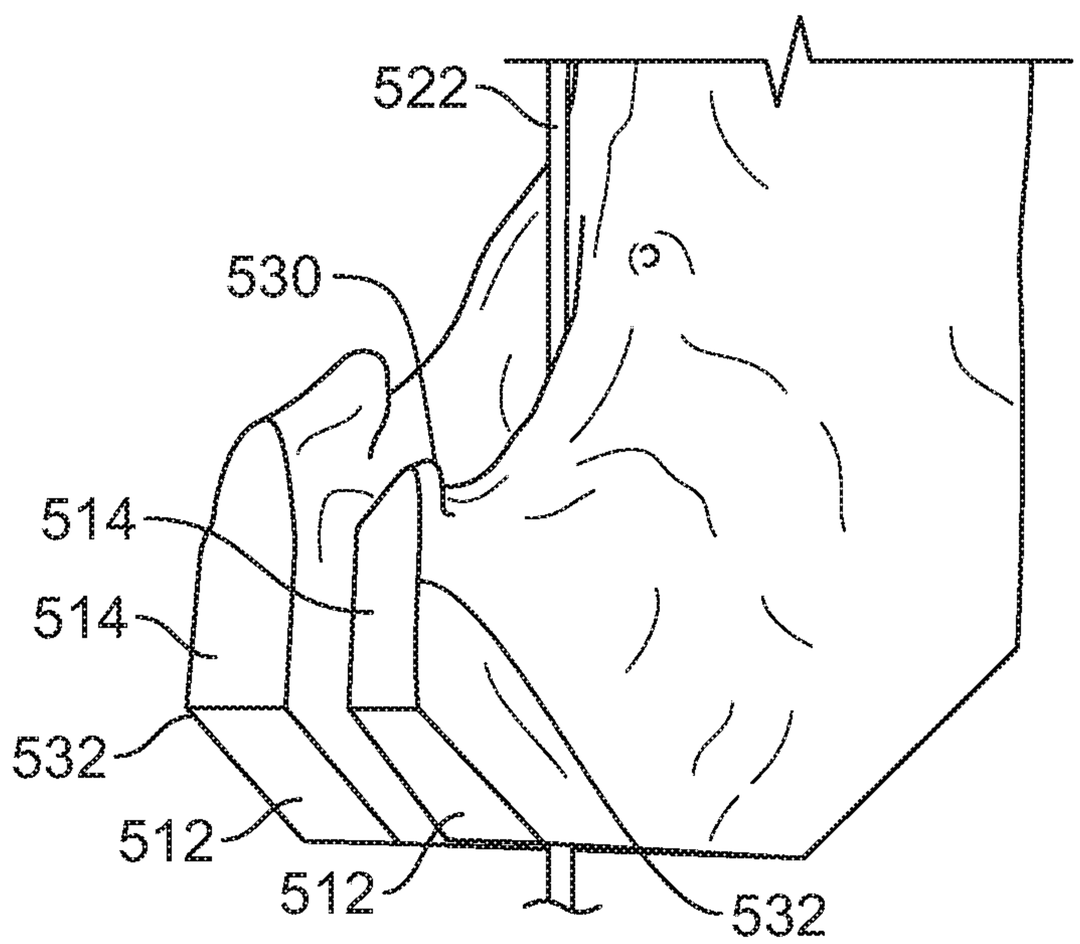
522
530
514
514
532
512
512
532

FIG. 9

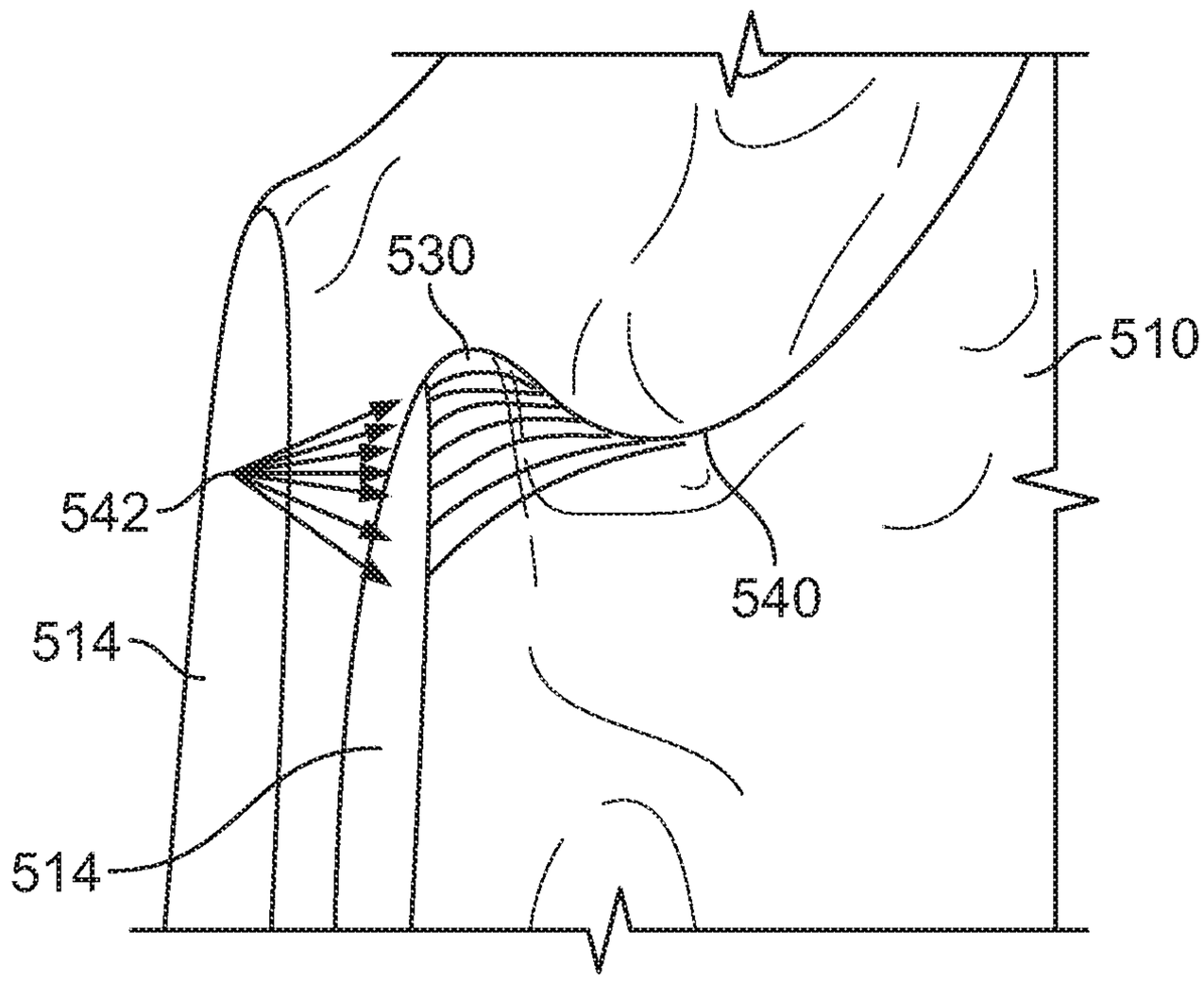


FIG. 10

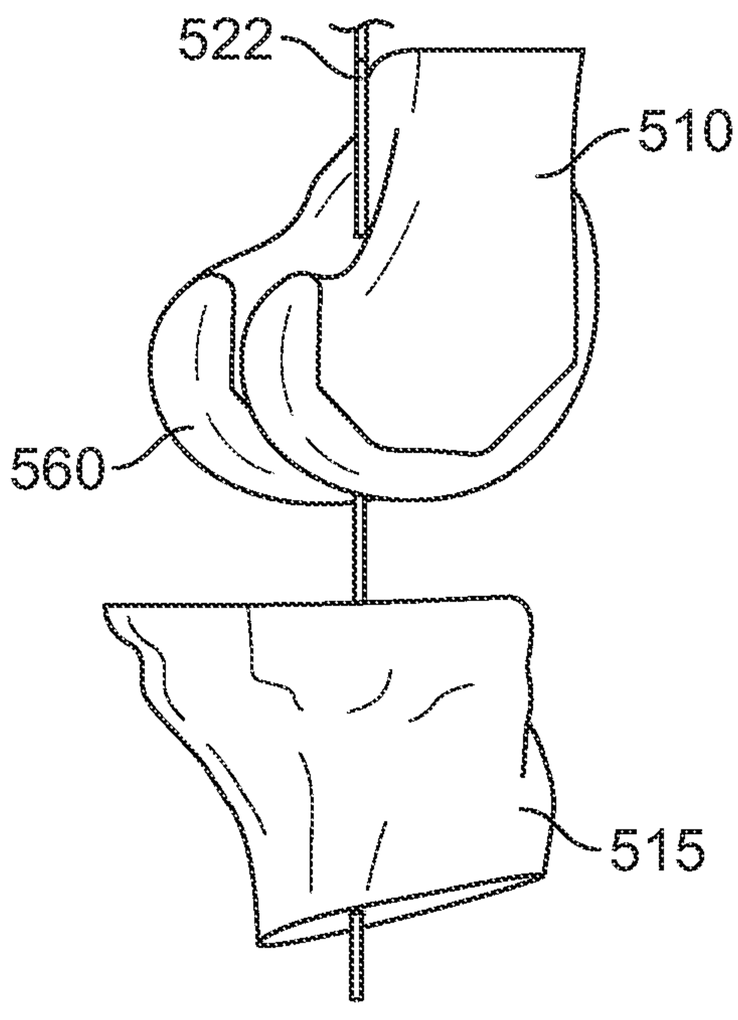


FIG. 11

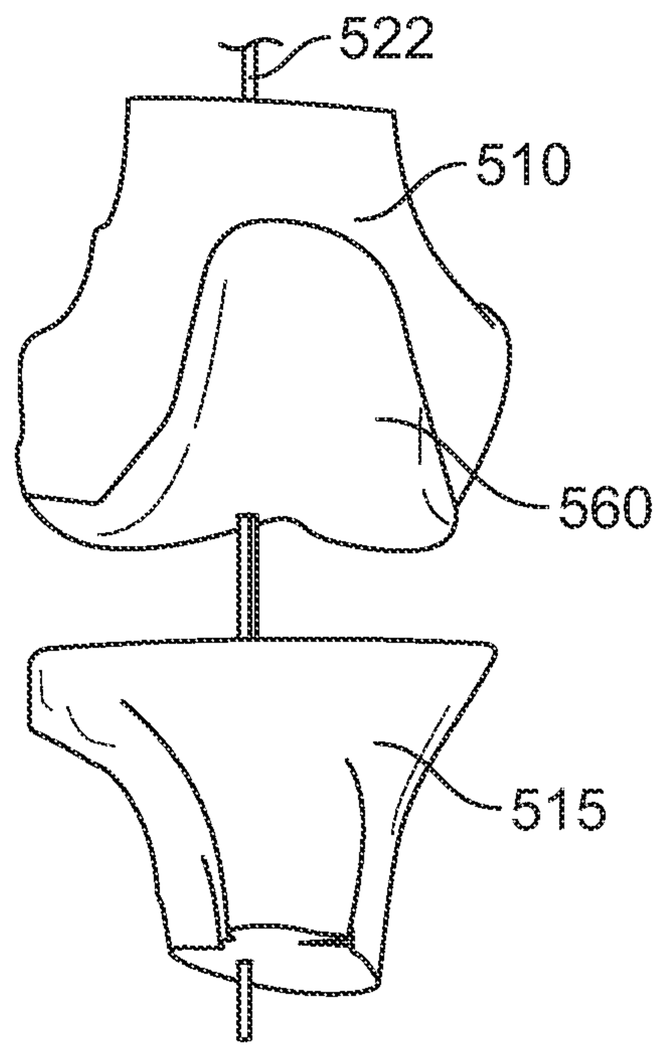


FIG. 12

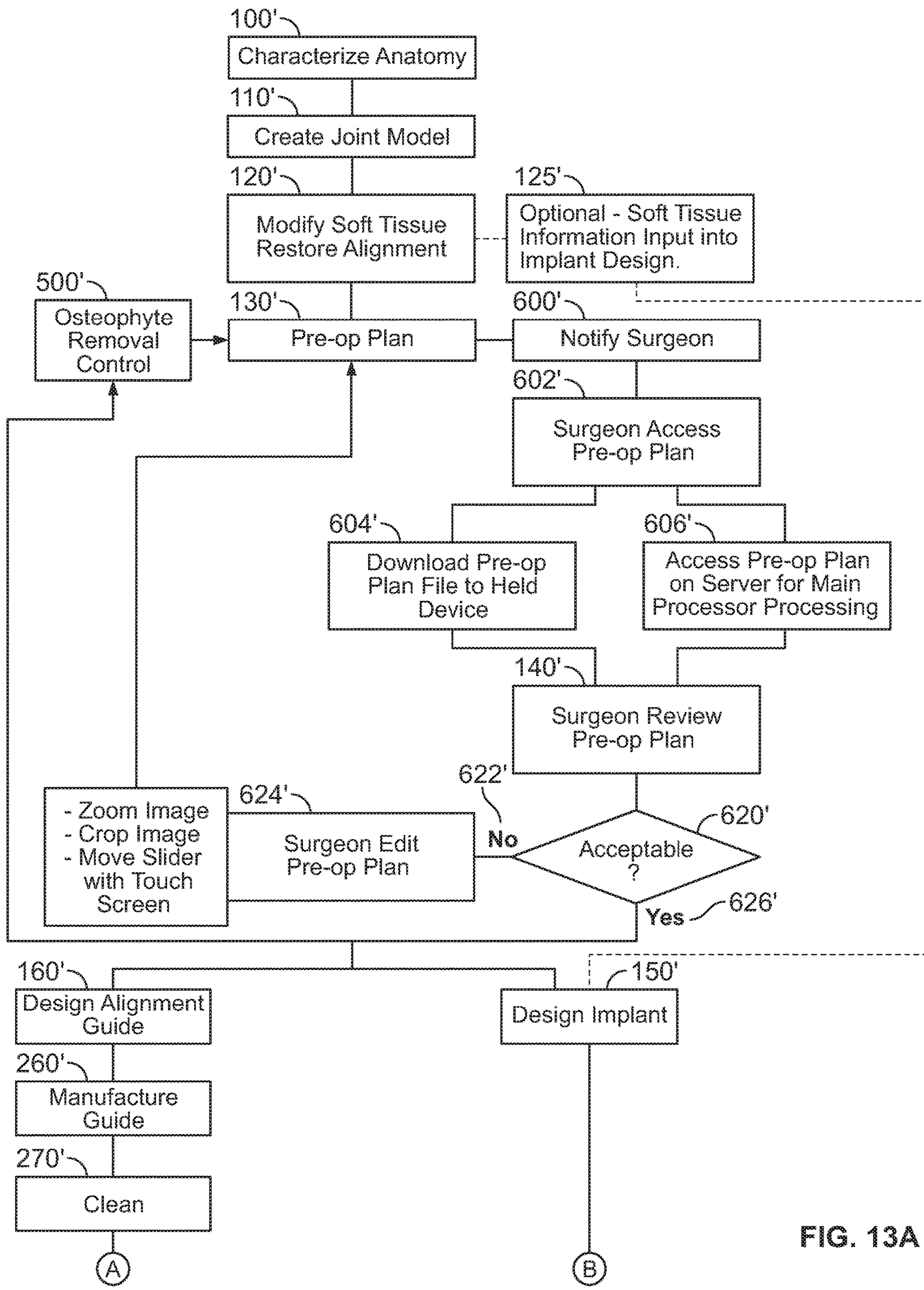
100'
Characterize Anatomy
110'
Create Joint Model
120'
Modify Soft Tissue Restore Alignment
125'
Optional - Soft Tissue Information Input into Implant Design.
500'
Osteophyte Removal Control
130'
Pre-op Plan
600'
Notify Surgeon
602'
Surgeon Access Pre-op Plan
604'
Download Pre-op Plan File to Held Device
606'
Access Pre-op Plan on Server for Main Processor Processing
140'
Surgeon Review Pre-op Plan
622'
No
620'
Acceptable ?
624'
- Zoom Image
- Crop Image
- Move Slider with Touch Screen
Surgeon Edit Pre-op Plan
Yes
626'
160'
Design Alignment Guide
150'
Design Implant
260'
Manufacture Guide
270'
Clean
A
B

FIG. 13A

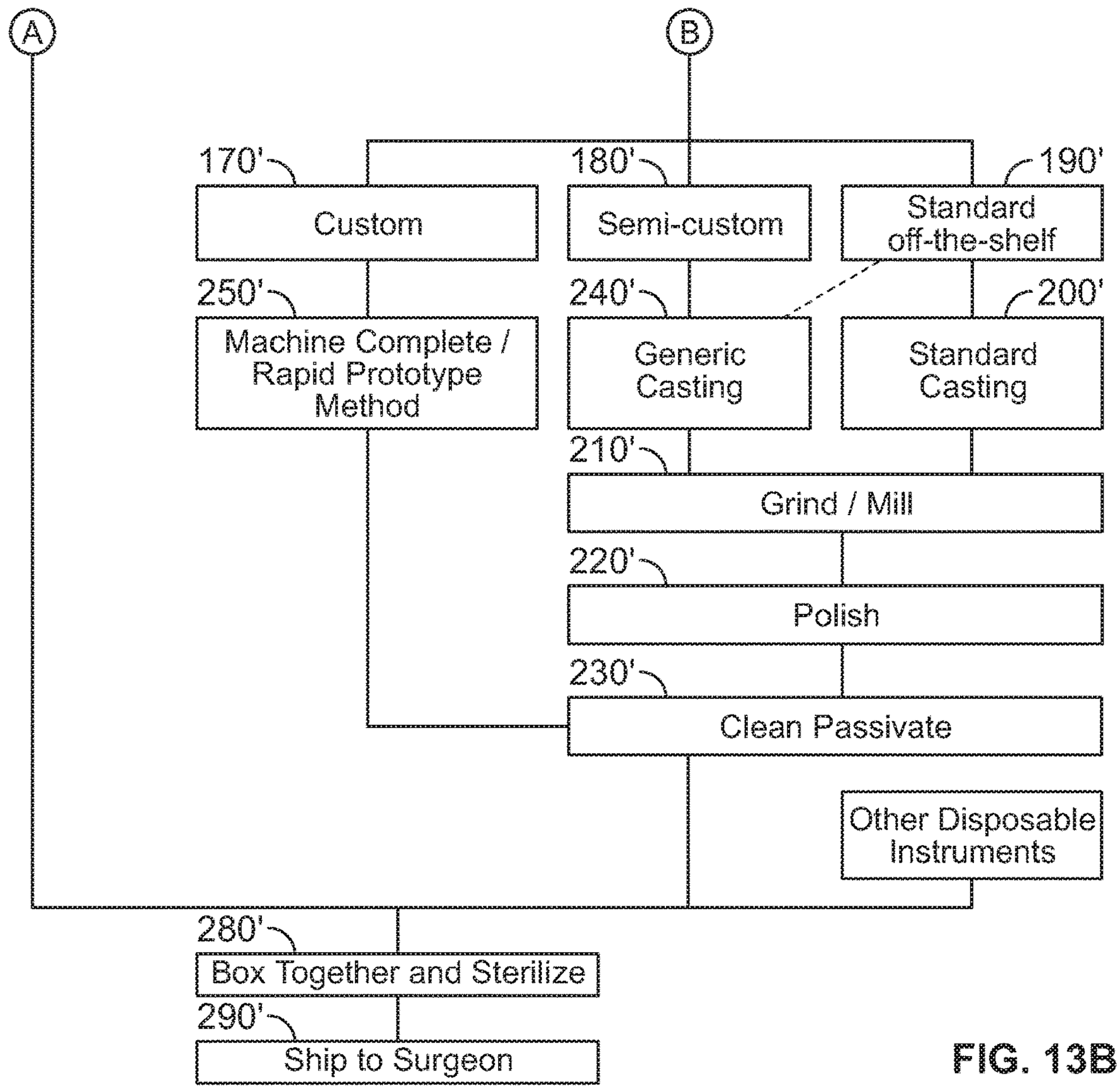


FIG. 13B

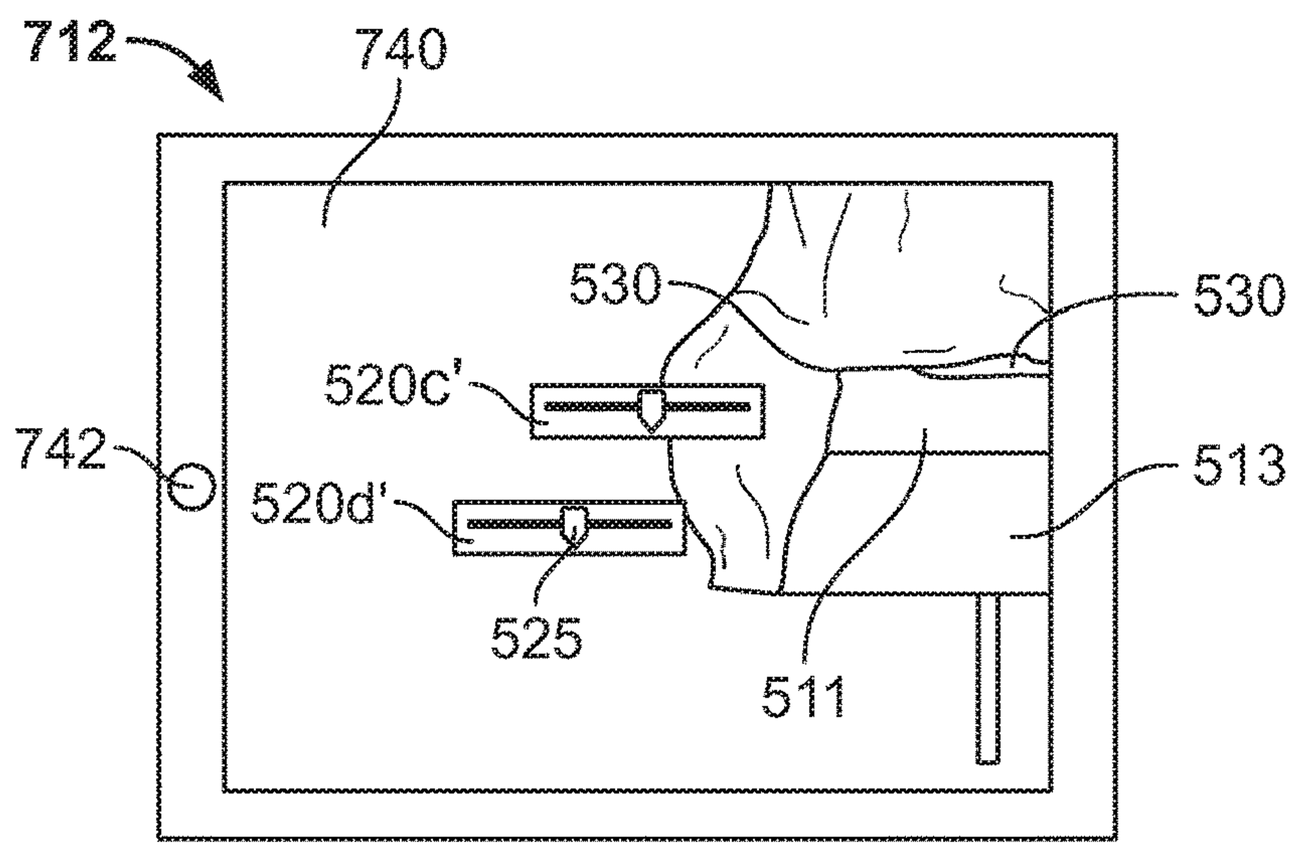


FIG. 15

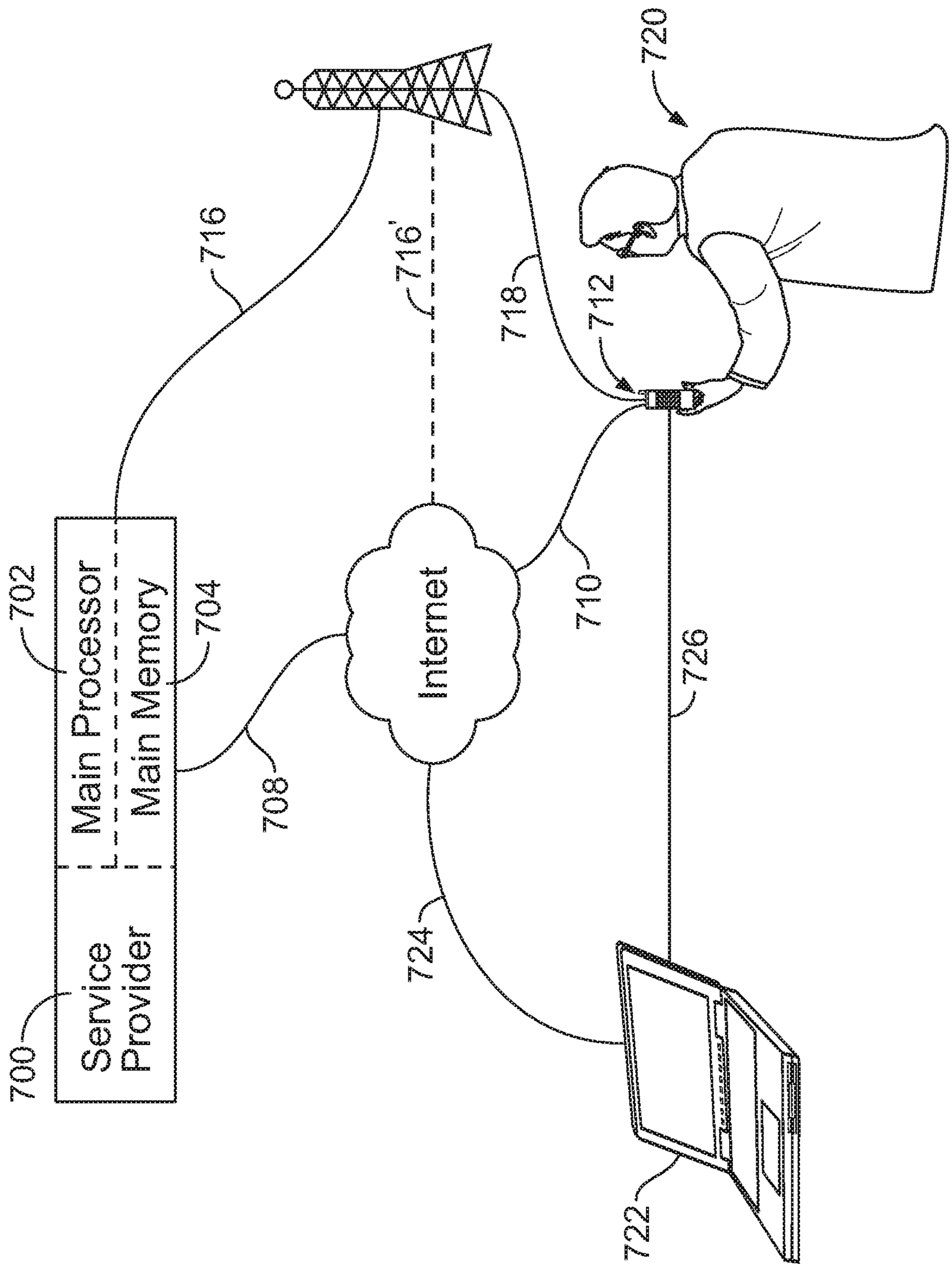
Service Provider
Main Processor
Main Memory
700
702
704
708
710
712
716
716'
718
720
722
724
726
Internet

FIG. 14

# METHOD AND APPARATUS FOR MANUFACTURING AN IMPLANT

## CROSS-REFERENCE TO RELATED APPLICATIONS

This application is a continuation of U.S. application Ser. No. 14/739,160 filed on Jun. 15, 2015, which is a continuation of U.S. application Ser. No. 13/766,419 filed on Feb. 13, 2013, which is a divisional of U.S. application Ser. No. 12/872,663 filed on Aug. 31, 2012, now U.S. Pat. No. 8,407,067 issued on Mar. 26, 2013, which claims the benefit of U.S. Provisional Application No. 61/310,752 filed on Mar. 5, 2010.

The disclosures of all the above applications are incorporated herein by reference.

## INTRODUCTION

The present teachings provide an implant customized for a specific patient based on a plurality of parameters identified during a preoperative planning stage.

## SUMMARY

The present teachings provide an orthopedic device that includes a femoral implant having a non-custom internal bone engagement surface. The femoral implant further includes at least nine parameters adjusted preoperatively to correspond to a specific patient. In one embodiment, the femoral implant includes three patient-specific lengths, three patient specific medial angles and three patient specific lateral angles, wherein the lengths and medial and lateral angles are selected preoperatively based on a three-dimensional image of an anatomy of a patient to match the anatomy of the patient.

The present teachings provide an orthopedic device manufacturing method. In one embodiment, the method includes preparing a three-dimensional image of a patient's joint, selecting a non-custom implant closely matching the joint, and modifying at least six angles of the implant to be patient-specific. In another embodiment, the method includes preparing a three-dimensional image of a patient's joint, selecting a non-custom femoral implant closely matching the joint, and modifying at least three lengths and six angles of the femoral implant to be patient-specific.

Further areas of applicability of the present teachings will become apparent from the description provided hereinafter. It should be understood that the description and specific examples are intended for purposes of illustration only and are not intended to limit the scope of the present teachings.

## BRIEF DESCRIPTION OF THE DRAWINGS

The present teachings will become more fully understood from the detailed description and the accompanying drawings, wherein:

FIG. **1** is a flowchart of an implant manufacturing method according to the present teachings;

FIG. **1**A is a flowchart of an implant manufacturing method according to the present teachings;

FIG. **1**B is a flowchart of an implant manufacturing method according to the present teachings;

FIG. **1**C is a surgical kit according to the present teachings;

FIG. **1**D is a patient-specific alignment guide according to the present teachings;



FIG. **1**E is a patient-specific alignment guide according to the present teachings;

FIG. **2** is a diagram illustrating a computer interface for an implant manufacturing method according to the present teachings;

FIG. **3** is perspective view of a generic casting of an implant according to the present teachings;

FIG. **4** is a posterior view of a generic casting according to the present teachings;

FIG. **4**A is a posterior view of a generic casting including a plurality of additional modifiable features according to the present teachings;

FIG. **5** is a plan view of a generic casting according to the present teachings;

FIG. **5**A is a plan view of a generic casting including a plurality of additional modifiable features according to the present teachings;

FIG. **5**B is a distal view of a three-dimensional image of the patient's distal femur showing planned resection planes according to the present teachings;

FIG. **5**C is a anterior view of a three-dimensional image of the patient's distal femur showing planned resection planes according to the present teachings;

FIG. **6** is a flow chart for an osteophyte/protrusion removal control method according to the present teachings;

FIG. **7** is a representative image of a patent's anatomy showing osteophyte/protrusion control tools for modifying the image;

FIGS. **8** and **9** are representative images of a patent's anatomy showing exemplary osteophyte/protrusion locations;

FIG. **10** is a representative image of a patent's anatomy showing representative depth control selections for surgeon manipulation;

FIGS. **11** and **12** are representative images of a patent's anatomy after osteophyte/protrusion removal with exemplary implants attached thereon;

FIGS. **13**A and **13**B illustrate a flowchart of a method of implant and guide design;

FIG. **14** is a schematic view of hardware and a user; and

FIG. **15** is a plan view of a display of a device.

## DESCRIPTION OF VARIOUS ASPECTS

The following description is merely exemplary in nature and is in no way intended to limit the present teachings, applications, or uses. For example, although some of the present teachings are illustrated for a knee implant, the present teachings can be used for any orthopedic implant.

The present teachings provide a manufacturing method that integrates patient's anatomic and medical information with interactive participation by a surgeon to select and manufacture an implant and, optionally, related surgical instruments, for a particular patient from generally three options: a custom made implant specific to the patient, an implant that is only partially custom-made or a semi-custom implant, and a standard off-the shelf implant. Similarly, off-the-shelf, custom-made, or semi-custom-made instrumentation (e.g. alignment guides, drill guides, cutting guides or other instruments) can be selected and manufactured, as recommended by the surgeon, for the surgical procedure. All the implant components, alignment guides, and other disposable instruments can be included in a package provided to a surgeon for a specific patient.

Referring to FIG. **1**, an exemplary flowchart of an interactive implant manufacturing method according to the present teachings is illustrated. The portion of the patient's

anatomy related to the orthopedic procedure and the implant is characterized and detailed at **100**. The characterization can be performed with various imaging methods capable of obtaining a representation of the affected anatomy, including, for example, soft and hard tissues. The tissues can include bone, bone joints with or without cartilage, ligaments, or other soft tissue. The imaging methods can include, for example, MRI, CT, ultrasound, radiography or X-ray, cameras and other devices.

The image information for the patient can be obtained at a medical facility or a doctor's office and can be sent to the manufacturer in an electronic and/or digital form contained. The image information can be stored on a physical medium, such as a CD, DVD, flash memory device (e.g. memory stick, compact flash, secure digital card), or other storage device. The information may alternatively, or in addition, be transmitted electronically with the Internet or worldwide web using appropriate transfer protocols. Also, electronic transmissions can include e-mail or other digital transmission to any appropriate type of computer device, smart phone, PDA or other devices in which electronic information can be transmitted.

Appropriate handheld devices (used as illustrated in FIG. **13**), can include handheld mobile device or portable communication devices, such as the iPhone® handheld mobile device sold by Apple Inc., a corporation of California, USA; the LG Shine® handheld mobile device sold by LG Corp. a corporation of REPUBLIC OF KOREA; or the Blackberry Bold® handheld mobile device sold by Research In Motion Limited a corporation of CANADA. The handheld device can be those that are held in the palm of a hand of a user, such as a surgeon (see FIG. **14**). The surgeon can then enter data with a stylus, keyboard, touch screen, etc. The handheld device can use local area networks, cell phone networks, or other data transmission systems to communicate with a main memory and processor of a service provider (see FIG. **14**).

Appropriate handheld devices can provide access to electronic communication or file transfer protocols, such as Internet or electronic mail, to transfer or access information files. The handheld devices can have installed programs that can be used to manipulate the information files, as discussed herein. Alternatively, or in addition thereto, the handheld devices can access servers that process data files while receiving input through the handheld devices and displaying images to the surgeon or user via the handheld device. In certain instances, the handheld device may only be a client that does not process and edit a data file of the pre-operative plan.

With continued reference to FIG. **1**, at **110**, the information collected at **100** can be used to create a three-dimensional model or image of the bone or joint with or without associated soft tissue or related anatomy using commercially available computer modeling software from various vendors or developers, such as, for example, from Materialise USA, Ann Arbor, Mich. The three-dimensional model of the patient's anatomy can be viewed on a computer display or other electronic screen and can also reproduced as a hard copy on film or other medium and viewed by direct or indirect or backlight illumination. The model can be sized for viewing on any appropriate screen size and may be cropped, rotated, etc. as selected by the individual (e.g. the surgeon) viewing the screen.

At **120**, soft tissue associated with the affected anatomy can be modified, or removed or repaired, to restore alignment of the joint, for example, or to remove torn or diseased tissue, or to cut or repair ligaments, or to provide natural or artificial ligament grafts. Soft tissue information can be optionally used as an additional design parameter or input for the implant design, at **125**. For example, a custom or patient-specific bearing articulation of a knee joint can be designed based on the kinematic profile and the soft tissue/ligament information available for a particular patient. Further, kinematic information for the patient can be obtained by an actual gait analysis of the patient, and can also be obtained by computer modeling software that uses the MRI images of the patient's joints and associated ligaments, muscle or other soft tissue to derive kinematic analysis of the patient and corresponding recommendations for soft tissue modification, such as releasing a ligament, for example. Such software is commercially available from LifeModeler, Inc., of San Clemente, Calif.

At **130**, a preliminary pre-operative plan of the surgical procedure can be prepared for surgeon or other medical user or technician review, including the planning of various bone resections, sizes and types of implants, and various geometric requirements including relevant dimensions, such as height, width, orientation of particular features, etc. The preliminary pre-operative surgical plan can include a recommendation of particular implants and associated instruments to be used in the surgical procedure, as discussed below. The preliminary pre-operative surgical plan can be in the form of digital images that can be viewed interactively using a computer modeling software, such as the software referenced above. The preliminary pre-operative plan and any further changes or a finalized pre-operative plan can be a plan devised to obtain a healthy or as close to healthy anatomical orientation after an operative procedure. The healthy anatomy can be based on natural or pre-injury anatomy or mechanically correct or efficient anatomical orientation.

At **140**, the preliminary pre-operative surgical plan can be submitted to the surgeon (or other user) for review, either electronically or by land mail, and either in digital or hard copy form, as discussed above in connection with transmitting imaging information. In particular, the surgeon can review the resection planes shown in image of the patient's anatomy, make changes in the location, size and orientation of the resection planes and, generally, work interactively until the pre-operative plan from **130** is surgeon-approved. Specifically, the surgeon may approve the image of the patient's anatomy showing corresponding resection planes. As shown in FIGS. **7** and **8**, the patient's anatomy **510**, as represented in the image, can be, for example, a distal femur with approved resection planes including medial and lateral anterior chamfer planes **513**, medial and lateral anterior cut planes **511**, medial and lateral posterior chamfer planes **512** and medial and lateral posterior cut planes **514**. Following the surgeon's approval of the anatomy and the resection planes at **140**, the surgeon is provided with the opportunity to remove one or more osteophytes/protrusions from the image of the patient's anatomy **510** at surgeon-selected locations and depths at **500** (See FIG. **6**). Removal of such protrusions and smoothening of the joint surface that receives the implant can parallel the intra-operative joint preparation by the surgeon and improve the actual fit of a surgeon-selected implant, whether patient-specific, semi-custom, or off the shelf.

An automated osteophyte/protrusion removal control module **500** can be incorporated in the planning stage of the manufacturing method illustrated in FIG. **1**. The automated osteophyte/protrusion removal control module **500** can be provided as a separate pre-operative planning module, as

shown in FIG. **6**, or it can be incorporated and/or fully integrated with the manufacturing method illustrated in FIG. **1**.

Certain parts of the bone, including various bone bumps, protrusions, growths and osteophytes can be generally removed from the three-dimensional reconstruction of a patient's anatomy before designing a patient-specific implant or semi-custom implant, or before selecting an off the shelf implant. The automated osteophyte/protrusion removal control module can replace a time-consuming and potentially less accurate manual modification of the three-dimensional image to remove such bone growths or osteophytes by an experienced image or CAD technician. The automated osteophyte/protrusion removal control module **500** can provide more accurate and faster removal of such bone irregularities, which can vary in shape, location and size from patient to patient. It will be appreciated that the osteophyte/protrusion removal control module **500** can be used for smoothing out a bone surface by removing any type of bone protrusion, including bumps, irregularities and osteophytes. According to the present teachings, osteophytes are illustrated as exemplary, but not exclusive, candidates for complete or partial removal.

Referring to FIG. **6**, the osteophyte/protrusion removal control module **500** can start **502** with an input of the three-dimensional image of the patient's anatomy **510** including resection planes, as shown in FIGS. **7-9**, after review and approval of the resection planes by the surgeon (or other user, including other professionals or technicians) at **140** of FIG. **1**. In the exemplary illustration of FIG. **7**, the image of the patient's anatomy **510** can be analyzed to identify osteophyte/protrusion locations **530** (at **504** of FIG. **6**) by determining tissue or bone overhang protruding past outer edges **532** of the various resection planes, such as the resection planes illustrated at **511**, **513**, **512** and **514** in FIGS. **7-9**. If such osteophyte/protrusions **530** extend beyond the edges of the resection planes in the direction of the planned or anticipated implant location, the osteophyte/protrusions **530** can interfere with implant fitting.

Referring to FIGS. **6**, **7** and **10**, in addition to identifying the location of osteophytes/protrusions **530**, the osteophyte/protrusion removal control module **500** can provide visual control for the surgeon to select the aggressiveness of osteophyte/protrusion removal, or the degree of smoothening and/or flattening of the corresponding joint anatomy. Specifically, by fine-tuning the osteophyte/protrusion locations, at **506** of FIG. **6**, the surgeon can control the depth of the osteophyte/protrusion removal in a continuous or discrete manner. In one aspect, a landmark location **540** for each osteophyte/protrusion **530** can be identified and pegged for measuring from and initiating a continuous series of constant or variable depth contours **542** to aid the surgeon in selecting the depth of osteophyte/protrusion removal. The depth contours can be automatically generated by the computer software that generates a three-dimensional model or image of the anatomy, such as the software commercially available, for example, from Materialise USA, Ann Arbor, Mich. The landmark location **540** can be a location of lowest possible depth in the vicinity of the identified osteophyte/protrusion, a minimum, or a valley location, as shown in FIG. **10**. Although the depth contours **542** are shown as discrete in FIG. **10**, it will be appreciated that a continuous removal control can be provided, such that the surgeon can exercise unlimited choices of depth contours for removal. The depth contours **542** can represent curved smoothed-out surfaces under the original osteophyte/protrusion **530** and can be exposed after an overlying area is shaved or peeled in the image of the patient's anatomy **510** by the operation of graphical or visual removal tools provided on the image of the patient's anatomy **510**. The surgeon or other user can manipulate the graphical removal tools with a user interface, such as a mouse, touch screen, joystick, slide pad, or other user interface.

Referring to FIG. **7**, various visual removal tools can be provided for on-screen manipulation and control by the surgeon, at **508** of FIG. **6**. For example, a removal tool corresponding to each edge of a resection plane can be provided and used to visually/graphically remove a portion of an osteophyte/protrusion associated with a particular edge **532**. In FIG. **7**, four such exemplary removal tools **520***a*, **520***b*, **520***c*, **520***d* (collectively referenced as **520**) are shown, each removal tool associated with an edge of a resection plane, such as lateral and medial chamfer plane and lateral and medial cut plane. Although the removal tools **520** are illustrated as straight sliders in FIG. **7**, the amount removed follows a depth contour **542**, as illustrated in FIG. **10**. The removal tools **520** can include a visual indicator **525** that can provide information to the surgeon in the form of a number on a scale indicative of the depth of aggressiveness of osteophyte/protrusion removal. In another aspect, the indicator **525** can provide visual information in terms of variable color in shades gradually changing from minimum depth removal (green, for example) to maximum depth removal (red, for example).

After the surgeon completes the osteophyte/protrusion removal, the surgeon can manipulate and superimpose implant images in relation to the modified patient's anatomy **510**. In FIGS. **11** and **12**, exemplary images of a resected femur **510** and tibia **515** referenced relatively to a mechanical axis **522** are illustrated. The femur image illustrates the patient's anatomy **510** after the osteophytes/protrusions **530** shown in FIGS. **8** and **9** have been removed and a femoral implant/component **560** is placed on the resulting smoothed out surface that follows one of the depth contours **542** shown in FIG. **9**.

Referring to FIGS. **1**, **1**A, and **1**B, based on the preliminary pre-operative surgical plan and the patient information, the surgeon can make a recommendation regarding the design of the implant at **150**, and any desired associated alignment guides at **160**. At **150**, the surgeon can recommend a method of designing an implant. Specifically, the surgeon can select one of the following three options: a first option of a custom or patient-specific implant at **170** or a second option of a semi-custom made implant at **180**, or a third option of a standard or off-the-shelf implant at **190**. The surgeon can also include recommendations and preferences for various custom and non-custom instruments to be used in the procedure at the surgeon review at **140**, as well as at the selection and design of implant at **150** and selection and design of alignment guides **160**. It will be appreciated that, based on the surgeon's recommendation at **140**, the preliminary pre-operative surgical plan can be modified at **130**, including all the surgeon's preferences regarding anatomy modification (osteophyte removal, resection planes, etc.), implant design, alignment guide design and selection of various tools and instruments, and then resubmitted to the surgeon for approval.

A custom-made implant is a patient-specific, one of a kind implant specifically made for a particular patient, and consequently there is no inventory associated with such implant. Standard or off-the-shelf-implants are available and stocked in a number of sizes, typically six or more, and a number of configurations or types, including bilateral or unilateral implants, constrained, semi-constrained, mobile, etc.

Because of the variety of sizes and configurations that are kept in stock to accommodate different patients, a large inventory of standard implants is created, and several molds for each type and size of implant may be used. As described below in detail, semi-custom implants provide an intermediate solution between custom-made and off-the-shelf implants. Semi-custom implants reduce the size of inventory and molds required for production, while allowing some degree of patient-specific customization.

Custom or patient-specific implants, when approved by surgeon at **170** for a specific patient, can be manufactured for the patient by rapid prototyping methods, such as stereolithography or other similar methods, or by CNC milling, or other automated or computer-controlled machining, or by robotic methods, at **250**. Manufacturing can take place at a manufacturing center or facility in situ or at remote or off-site location. It will be understood that in situ manufacturing is used as a short hand for a manufacturing site of the original equipment manufacturer (OEM), but can be physically located at a different facility of the OEM. Off-site or remote manufacturing will be understood to refer to facilities operated by other manufacturers who are contracted by the OEM for manufacturing all or some of the implants, components or parts for the surgical procedure.

Off-the-shelf implants, when approved by the surgeon a **190**, can be manufactured by standard casting methods from bar stock or other stock material at **200**, then shaped to a final shape and size by grinding or milling at **210**, polished at **220**, and then cleaned/passivated at **230**. Such off-the-shelf implants can be part of an existing inventory, or mass-produced, or produced by just-in-time agile manufacturing methods.

Semi-custom implants, when approved by the surgeon at **180**, can be made from a generic casting at **240**, as described below, or by modifying existing standard implant designs to match various features or parameters based on the anatomy of the patient, as described in co-pending patent application entitled Patient-Modified Implant and Associated Method, Ser. No. 12/103,834, filed on Apr. 16, 2008, the disclosure of which is incorporated by reference herein. After the generic casting is modified for certain parameters of a patient, it can be processed at aspects **210-230** to a passivated form. Patient-specific parameters can include parameters relating to the size of the implant, including height, width, various articulation parameters or angles, etc., as discussed in specific example below in reference to FIGS. **3-5**.

The surgeon's review of the surgical plan at **140** may further include, at **160**, a request for one or more patient-specific alignment guides to be used with the implant. Patient-specific alignment guides are described in co-pending patent application Ser. No. 11/756,057, filed on May 31, 2007, Ser. No. 11/971,390, filed on Jan. 9, 2008, Ser. No. 12/025,414, filed on Feb. 4, 2008, and Ser. No. 12/039,849 filed on Feb. 29, 2008. The alignment guides can be manufactured at **260** with by rapid prototyping methods, such as stereolithography or other similar methods or by CNC milling, or other automated or computer-controlled machining or robotic methods, and cleaned at **270**. The alignment guides, the implants and optionally other disposable instruments (at **272**) can be packaged and sterilized at **280**, and forwarded to the surgeon or the surgeon's medical facility for implantation at **290**.

The methods described in connection with FIGS. **1**A and **1**B can be modified to incorporate additional features, as illustrated in FIG. **1**C. The additional features can include a preparation of a surgeon kit **1000** at **276** and optionally a tracking procedure in which tracking tags are added at **278** to the various parts that are included in the surgeon kit **1000**. The tracking procedure can be incorporated in the manufacturing, cleaning, sterilizing, assembling and boxing the various components up to implantation and can be maintained, for example through the procedures at **260**, **270**, **230**, **272**, **274**, **276**, **280**, and **290**, as shown in FIG. **1**B. The surgeon kit **1000** and can be tracked during assembling/stocking the surgeon kit **1000** with the various components, and the tagged components can be tracked from manufacture to implant procedure.

Referring to FIGS. **1**B-**1**E, a surgeon kit **1000** can be generated at **276**. The surgeon kit **1000** can be designed and assembled during the process described above in FIGS. **1**A, **1**B and IC and during the manufacturing of the patient-specific alignment guides and implants. The surgeon kit **1000** can be assembled based on surgeon preferences and can include a set of implants, such as, for example, a femoral implant **1050**, a bearing **1052** and a tibial implant **1054**, for an exemplary knee replacement procedure, or other implant components depending on the surgical procedure and the surgeon's preference. The implants can be patient-specific, of semi-custom or standard off-the-self as described above. In addition to or instead of the implants, surgeon-selected alignment guides (at **160**, **165** and **260**), other disposable instruments (at **274**) and other reusable instrument (at **274**) selected according to the surgeon's preferences can be included in the surgical kit **1000**. In one embodiment, the surgeon kit can include only instruments, such as, for example, alignment guides and other tools, designed to be disposable.

In the exemplary illustration of FIG. **1**C, a surgeon kit **1000** for a knee procedure is shown to include a femoral alignment guide **1010**, a tibial alignment guide **1018**, a femoral drill guide **1012**, a tibial drill guide **1020**, a femoral distal cutting block **1014**, a tibial cutting block **1030**, a four-in-one femoral cutting block **1016**, a tibial template **1022** with alignment rod **1024**. The alignment guides are single-use and disposable. The various drill guides and cutting blocks can be re-sterilazable and reusable, although disposable drill guides, cutting blocks and other tools can also be designed. Additionally, a set of trochar pins **1032** and a set of spring drill pins **1034** can be included. Depending on the surgeon's preferences, various surgical blades **1036** can be added and additional medical products, such as, for example, bone cement **1038**, or other medical supplies or biologics **1040**.

Referring to FIGS. **1**B-**1**E, a tracking system can be incorporated with the surgeon kit **1000**. Tracking tags **1110** can be added at **278** optionally to the alignment guides, the implants and/or the entire surgeon kit **1000**. The tracking tags **1110** can be simple barcode tags, or other scan readable tags or radio frequency identification (RFID). The tags **1110** can be added to individual instruments or on the entire surgical kit **1000**, outside the box. The tracking tags can include patient-specific information and/or surgeon information, such as, for example, patient's name, age, gender, procedure to be performed, surgeon's name; clinic or hospital location, etc.

The tracking tags **1110** can be removable. For example, the tracking tags **1110** can be attached with removable glue sticks or frangible attachments. In one embodiment, the tracking tags **1110** can be incorporated in a frangible extension **1102** of an alignment guide **1100**, as illustrated in FIGS. **1**D-**1**E. The exemplary alignment guide **1100** can include a body **1120** having a patient-specific engagement surface **1126** for engaging a complementary surface of the corre-

sponding anatomy of the patient and one or more alignment formations **1122** defining guiding bores **1124** for guiding alignment or drill pins or other instruments. The extension **1102** can be prepared or incorporated during the manufacturing process, for example, during the layering process of a rapid prototyping method, and can include a pocket **1104** in which a tracking tag **1110** is inserted, as part of the layering process. Layering can continue and cover the tracking tag **1110**. In another embodiment, the extension **1102** can be a blank of larger dimensions from which the pocket **1104** is machined for the tracking tag **1110**. The tracking tag **1110** can be removed or broken off by the surgeon. Tracking of the patient-specific (and surgeon) information can be provided for the entire manufacturing procedure from start to finish, i.e., from the manufacturing of the tracked components to assembling the surgeon kit **100** to the implant procedure at the operating theater or site.

Referring to FIG. **2**, a computer interface **400** to a computer program for the management of the manufacturing method is illustrated diagrammatically. An orthopedic system manager **402** can be in the form of software or other computer program associated with the original equipment manufacturer. The orthopedic system manager **402** can be accessible locally via dedicated computer machines or computer terminal directly communicated with software either by hard wire or wirelessly. The orthopedic system manager **402** can also be accessible remote remotely via the Internet or other remote communication portals using any electronic or other devices that can connect to the Internet or other web-based network, or other similar communication networks, including cable, satellite and telephone-based networks.

The system manager **402** can provide access to patient file information, including lists of all current patients at **403**, and surgery dates, surgeons, and approval status of the surgical plan for each patient, at **404**. Each patient file can include personal and medical information of the patient, such as, for example, weight, height, gender, age, lifestyle, pertinent medical records and medical history, as well as information on patient assessment that includes physical and kinematic evaluation pertaining to the orthopedic procedure at **406**, and soft and hard tissue analysis at **408**, including information provided at aspects **120** and **125** of FIG. **1**, as discussed above. Imaging center information for patient scans, as discussed in relation to aspects **100** and **110** of FIG. **1**, can added or modified at **410**, and an imaging center for each specific patient can be specified at **412**. Surgeon profiles, including surgeon preferences regarding anatomic axes alignment or implant and instrument preferences that can be taken into account when preparing the preliminary pre-operative plan discussed at aspect **130** of FIG. **1**, can be created and edited at **414**. Information and selection of manufacturing centers can be accessed at **416** for manufacturing the implants and or alignment guides as discussed in relation to aspects **260**, **250**, **240**, and **210-230** of FIG. **1**. The preliminary pre-operative surgical plan for each patient can be provided at **418**, as discussed above at **140** in reference to FIG. **1**, and e-mailed or otherwise communicated to the patient's surgeon at **420**.

As discussed above at aspects **150** to **190** of FIG. **1**, one implant option includes manufacturing semi-custom implants by generic casting. Illustrative examples of generic casting of a semi-custom femoral implant/component are shown in FIGS. **3-5**. A generic casting **300** of the implant is a casting that is more specialized than ordinary bar stock, from which any size of implant can be made, but less specialized than the off-the-shelf implants that are available in a particular number of sizes, typically six-to ten sizes and are finished from specific castings of those sizes. The generic casting can be made in a size and shape that can accommodate a range of variable features for the implant, and at the same time can be machined to multiple sizes, such as three or four smaller sizes. In contrast, off-the-shelf implants require a mold or casting for each offered size, and a larger inventory of available sizes for each implant component. The generic casting can generally include geometric features which are size/shape and/or patient-independent or universal, and also features that are size/shape or patient-specific, as discussed in the examples below. More particularly, the generic casting can include at least one geometric feature that will remain unchanged for any patient or universal feature, and at least one geometric feature that can be specifically customized for and is specific to a particular patient. Additionally, generic castings can be provided in the same sizes as off-the-shelf components, although generic castings can have different shapes than off-the-shelf components.

Referring to FIGS. **4** and **5**, an exemplary generic casting **300** of a femoral implant is illustrated. In this example, the generic casting **300** can have an anterior flange **302** of medial-lateral width W, and/or a height H and/or other geometric dimensions to accommodate multiple sizes of femoral implants. For example, multiple sizes of left-sided implants **304***a*, **304***b*, and various sizes of right-sided implants **306***a*, **306***b* can be formed by a single generic casting. In addition to multiple sizes, multiple shapes can be made from a single generic casting. Appropriate markings or indentations or score lines for cutting to size can be provided, such as height markings **330**, for example. The implant for a particular patient can be formed from the generic casting **300** by selecting particular features, such as the width W or height H, or other geometric features for a particular patient and machining the generic casting **300** to provide the size, dimension or shape, or combinations thereof for that particular geometric feature.

Referring to FIG. **5**, the generic casting **300** does not include a patella track feature, but provides an area in which a custom patella track **308** can be machined at a custom angle or custom shape for each specific patient. The generic casting **300** can also include additional material in the intercondylar notch area **310** to allow for custom machining of the intercondylar notch area **310** to accommodate various types of articulation or constraint in relation to a tibial implant, such cams or intercondylar boxes, and other contact areas for articulation with the tibial implant in accordance with a kinematic plan for the joint of the specific patient. Custom shapes of various other portions of the implants can also be prepared for the generic castings. Separate molds for posterior stabilized and cruciate retaining articulations can be made, each mold capable of accommodating multiple sizes of the corresponding implant type. For example, the intercondylar notch area **310** can be machined for line or area contact with the articular surfaces of a tibial implant of various degrees of flexion. Exemplary articulations are disclosed in commonly assigned U.S. Pat. Nos. 6,589,283, 6,413,279, and 6,165,223, and in co-pending U.S. patent application Ser. No. 10/840,765 filed on May 6, 2004, all of which are incorporated herein by reference. Various markings **332** corresponding to different sizes can be provided.

Referring to FIG. **3**, the generic casting **300** can include at least one patient-independent or universal feature, such as, for example, universal cement wells **312** or other universal features. Such universal features can be used with any internal geometry **314**, which can be machined into the

generic casting **300** to accommodate the appropriate shape and/or size for a specific patient.

Referring to FIGS. **3**, **4**A, **5**A, **5**B and **50**, a semi-custom implant (**304***a*. **304***b*. **306***a*, **306***b*) can also be generated from a generic casting **300** by customizing a plurality of features based on the patient's anatomy during the pre-operative planning stage in addition to or instead of the parameters discussed above. The generic casting **300** can include a standard, non-custom articulation surfaces for the medial and lateral condyles and an internal bone engagement surface **300***a* for engaging the resected femur and including five internal planes **511***a*, **513***a*, **517***a*, **512***a* and **514***a* (FIG. **3**) corresponding to anterior cut plane **511'**, anterior chamfer plane **513'**, distal cut plane **517'**, posterior chamfer plane **512'** and posterior cut plane **514'** (FIGS. **5**B and **50**). The internal bone engagement surface **300***a* and corresponding internal planes of the generic casting **300** can correspond to standard, i.e., non-custom, sizes for the femoral implant. By selecting a relatively large number of parameters corresponding to the patient's anatomy, as captured in the three-dimensional image of the corresponding joint portion of the patient, the semi-custom implant can be made to correspond to the patient's anatomy as closely as desired while retaining the internal geometry corresponding to the resection planes in the sagittal view. More specifically, in an exemplary embodiment, at least nine parameters of the implant can be patient-specific, including three lengths and six angles, as discussed below in reference to the preoperative plan for the specific patient and the various planned resection planes.

In an exemplary embodiment of the preoperative plan, an image of the patient's anatomy, i.e. the distal femur **510'** of the patient indicating the planned cut planes is illustrated in FIGS. **5**B and **5**C. FIG. **5**B represents a distal view of the three-dimensional image of the distal femur **510'**, as reconstructed by MRI, CT or other scans. The planned resections indicated on the image include medial and lateral sides of a posterior chamfer plane **512'**, of a distal cut plane **517'**, and of an anterior chamfer plane **513'**. The most anterior point of the intercondylar notch is indicated by a tangent line at **907**. FIG. **5**C represents an anterior view of the three-dimensional image of the distal femur **510'**, and illustrates the distal cut plane **517'**, anterior chamfer plane **513'**, and an anterior cut plane **511'**. The straight edges of the various cut planes are indicated as follows in reference to FIG. **5**C: posterior distal edge **950** is the posterior edge of the distal cut plane **517'**; anterior distal edge **952** is the anterior edge of distal cut plane **517'**; distal anterior edge **954** is the distal edge of the anterior cut plane **511'**; and proximal anterior edge **956** is the proximal edge of the anterior cut plane **511'**. FIG. **5**B also illustrates the posterior distal edge **950**, the anterior distal edge **952**, and the distal anterior edge **954**.

A representative, but not exhaustive list of patient-specific parameters that can be selected at the preoperative stage for incorporation into the implant design after a particular size implant has been selected is indicated in FIGS. **4**A and **5**A-C.

Specifically, a central plane **800** perpendicular to the epicondylar axis **801** of the distal femur **510'** can be identified through the center of and orthogonal to the medial-lateral width W of the generic casting **300**. The central plane **800** can be used as a reference plane for the bone cuts and the various patient-specific parameters to be used in modeling the semi-custom implant. The specified parameters can include, for example, three distances/lengths of the implant and six angles of the implant, each of which can be modified pre-operatively to be patient-specific such that they correspond to conform to the particular patient's anatomy. It will be appreciated that a lesser or greater number of parameters or different parameters can be use to customize and optimize the implant for the patient. The following exemplary parameters are illustrated in FIGS. **4**A and **5**A-C: medial condyle width **802**, lateral condyle width **804**, notch height **806**, first, second and third medial angles **808**, **810**, **812**; and first, second and third lateral angles **814**, **816**, **818**.

In particular, and referring to FIGS. **5**B and **5**C, the medial condyle width **802** is defined as the distance between the central plane **800** and the farthest medial point/tangent line **902** (but not part of an osteophyte) on the posterior distal edge **950**. The lateral condyle width **804** is defined as distance between the central plane **800** and the farthest lateral point/tangent **904** on the posterior distal edge **950** (but not part of an osteophyte). The notch height **806** defined as the distance along the central plane **800** from the posterior cut plane **514'** at edge **906** to the most anterior point/tangent line **907** on the notch (but not part of an osteophyte). The first medial angle **808** is defined as the angle between the central plane **800** and the line **908** connecting the medial-most points on the posterior distal edge **950** and the anterior distal edge **952**. The second medial angle **810** is defined as the angle between the central plane **800** and the line **910** connecting the medial-most points on the anterior distal edge **952** and the distal anterior edge **954**. The third medial angle **812** is defined as the angle between the central plane **800** and the line **912** connecting the medial-most points on the distal anterior edge **954** and the proximal anterior edge **956**. The first lateral angle **814** is defined as the angle between the central plane **800** and the line **914** connecting the lateral-most points on the posterior distal edge **950** and the anterior distal edge **952**. The second lateral angle **816** is defined as the angle between the central plane **800** and the line **916** connecting the lateral-most points on the anterior distal edge **952** and the distal anterior edge **954**. The third lateral angle **818** defined as the angle between the central plane **800** and the line **918** connecting the lateral-most points on the distal anterior edge **954** and the proximal anterior edge **956**.

Referring to FIG. **1**A, when the above parameters **800**, **802**, **804**, **806**, **808**, **810**, **812**, **814**, **816**, **818** are identified in the pre-operative planning stage, an image of a semi-custom implant customized with these parameters can be displayed at **135** for review and comparison with the image of the patient's anatomy. The values of the parameters **800**, **802**, **804**, **806**, **808**, **810**, **812**, **814**, **816**, **818** can be adjusted, as desired, and the implant with the adjusted or finalized parameters can selected at **137** and forwarded to the surgeon for review at **140** together with the preoperative plan which includes surgeon's preferences of implants, guides and other instruments, as described above in connection with FIG. **1**. The preoperative planning procedure can proceed as discussed above.

As discussed above, each semi-custom implant has an internal bone engagement geometry including five planes **511***a*, **513***a*, **517***a*, **512***a* and **514***a* corresponding to the resection planes and at least nine patient-specific parameters, including the three lengths and six angles described above.

It will be appreciated from the above discussion that generic casting can greatly reduce inventory, machining costs and investment in mold tooling, while at the same time accommodating sizes and geometric features specific to a patient. Specifically, each implant type can be formed from a generic casting that can accommodate multiple AP sizes corresponding to medial-lateral widths, such as four sizes,

for example. For implants that are available in eight sizes, generic casting can reduce inventory by a half, using two molds total for eight sizes. Further, additional reductions in inventory can be obtained by combining right and left side implants into a single generic casting, as discussed above in relation to FIG. **4**. Thus, generic castings reduce side-specific castings and also allow for various custom shapes and features.

The process can then be followed as illustrated in FIGS. **13**A and **13**B as discussed above in relation to FIG. **1**. The blocks in FIGS. **13**A and **13**B that are illustrated with the same reference numerals as in FIG. **1**, but augmented with a prime are not discussed in further detail, but are discussed above in FIG. **1** and include substantially similar processes. In addition to the various applications discussed above, input from a surgeon or other appropriate user can be provided with a handheld device, as discussed above. As illustrated in FIGS. **13**A and B, a handheld device can be used by the surgeon to review the pre-operative plan at **140'**. It will be understood, however, that the process for providing a selected implant and tools can be similar to that discussed above, for example, with reference to FIG. **1**

With reference to FIG. **14**, a schematic diagram illustrating main or exemplary hardware components for the process illustrated in FIGS. **13**A and **13**B is illustrated. The pre-operative plan or preliminary pre-operative plan from block **130** and **130'** can be developed or produced by a service provider **700**. The service provider **700** can own, operate, manage, or the like a main processor **702** and a main memory **704**. The main processor and main memory **702**, **704** can be at the service provider **700**, in communication with the service provider **700**, or otherwise controlled, maintained, or used by the service provider **700**. Further, the main processor and main memory **702**, **704** can be incorporated into a single server system. Regardless, the main processor **702** can process or execute a program, such as a program to develop the pre-operative plan, accept inputs from the surgeon, and augment or generate the final pre-operative plan. In addition, the main processor **702** can also be used to design and output the implant and alignment guide in blocks **150**, **150'**, and **160**, **160'**.

As discussed above, and further herein, the pre-operative plan can be delivered or accessed by the surgeon via notification or surgeon access in block **600'**, **602'**. The access or delivery of the pre-op plan can be via an internet or worldwide web connection **706** that uses a first communication method **708** from the service provider **700** and a second communication method **710** to a handheld device **712**. It will be understood that the first and second communication method **708**, **710** can be wired or wireless and can both be the same. Alternatively, or in addition to an internet connection a cell or mobile phone connection system **714**, such as a tower, cell phone, antenna, can be provided. A first communication line **716** can transmit a communication through the mobile phone connection system **714**. It will be understood that the service provider can communicate directly with the mobile phone connection system **714** via connection **716** or through an indirect connection **716'**, such as an internet connection. A second communication line **718** can be used by a surgeon **720** with the handheld device **712**. Again, it will be understood, that the first and second communication system **716**, **716'**, and **718** can be wired or wireless and can be the same or different. In addition, an intermediate system, such as a laptop or desktop computer **722** can be in communication with a system, such as the internet **706** via a first communication system **724** and the handheld device **712** can be interconnected with the computer **722** via a second communication system **726**. Again, the first and second communication system **724**, **726** can be the same or different and be wired or wireless.

With further reference to FIGS. **13**A, **13**B, and **14**, the pre-operative plan from block **130'** can be delivered to a surgeon or accessed by a surgeon in any appropriate manner, such as via the internet **706** or cell communication **714**. The pre-operative plan can be the preliminary pre-operative plan as discussed above. The pre-operative plan can include or be saved as a data file, in the main memory **704** associated with the main processor **702** of the service provider **700**, of an appropriate type including image data, patient data, resection area data, etc. The pre-operative plan can be generated and stored by the service provider **700**. The service provider **700** can be any appropriate service, such as an implant and/or guide manufacturer or specification producer. A specification producer can be a service that provides specifications for an implant or guide to a manufacturer for production.

The service provider **700** can notify the surgeon **720** or user that the preliminary pre-operative plan is ready for review in block **600'**. The notification that the pre-operative plan is prepared can be performed in any appropriate manner. For example, an electronic mail notification can be sent to the surgeon **720**, a text message can be sent to the surgeon **720**, a telephone call can be made to the surgeon **720** via landline or a wireless connection, as illustrated in FIG. **14**. Regardless, the surgeon can be notified that the pre-operative plan is ready for review in block **600** through the use of the mobile device **712**.

Once the surgeon **720** is notified that the pre-operative plan is ready for review, the surgeon **720** can access the pre-operative plan in block **602'**. The surgeon can access the pre-operative plan in one or a plurality of ways in block **140'**. For example, the surgeon **720** can download the pre-operative plan to the handheld device in block **604'**. Alternatively, or in addition thereto, the surgeon **720** can access the main processor/memory **702**, **704** to review the pre-operative plan in the main memory **704** in block **606'** with the handheld device **712**. It will be further understood that the surgeon **720** may also access the plan with the computer or terminal **722** by downloading the pre-operative plan data file to the computer **722** on which appropriate software is installed to access the pre-operative plan. The surgeon **720** may also view a printout of the pre-operative plan for manipulating or commenting on the pre-operative plan, or any other appropriate manner.

If the surgeon **720** downloads the file to the handheld device **712**, the file can be downloaded to the handheld device **712** using any appropriate transfer protocol or communication system, as illustrated in FIG. **14**. For example, the handheld device **712** can be connected to the computer **722** through an appropriate communications cable or protocol **726**, such as Bluetooth®, a wireless communication protocol or a Universal Serial Bus (USB) cable. Once the file is downloaded to the handheld device **712**, a program on the handheld device **712** can execute or read the file and display images for the surgeon **720**. The surgeon **720** can then review the plan in block **140'**. For example, as illustrated in FIG. **7**, a view of a bone to be resected can be displayed along with the slider bars **520** for allowing editing or augmentation of the pre-operative plan by the surgeon.

The view of the images, including the slider bars **520**, can be augmented for the handheld device **712**. For example, a cropped and zoomed image may only include a portion of the bone or region to be cut or resected for viewing by the surgeon. For example, as illustrated in FIG. **15**, the handheld

device **712** can include a view screen **740** that displays an image of the bone to be resected, but only includes a portion thereof, such as a lateral portion of a distal femur. The zoomed and cropped image can include fewer than all of the slide bars **520**, such as only the slide bars **520'***c* and **520'***d*. The slide bars **520'***c* and **520'***d* can be illustrated and accessed by the surgeon to change data in the file for creation of appropriate instruments and implants for the specific patient or for augmentation of semi-custom or selection of an off-the-shelf instrument and implant.

The surgeon **720** can access or change the pre-operative plan file using the slide bars **520'***c* and **520'***d* through any appropriate access or manipulation process. For example, the screen **740** of the handheld device **712** can be a touch screen. Accordingly, the surgeon **720** can touch the screen with a finger or stylus to move the slider or marker portion **525** on the slider bars **520'***c* and **520'***d*. Alternatively, or in addition thereto, a trackball or other pointer device **742** can be provided to access and move the slider bars **520'***c* and **520'***d*. It will be understood that the handheld device **712** can have any appropriate input devices, such as an external or connected input devices, that can be mapped for appropriate command inputs into the system for augmenting the pre-operative plan file. The changes, if made by the surgeon, can then be saved to the pre-operative plan file to generate an edited pre-operative plan file.

If the surgeon **720**, after review of the pre-operative plan in block **140'**, finds the plan to be unacceptable in block **620'**, the NO path **622'** can be followed for the surgeon **720** to edit the plan in block **624'**. The surgeon **720** can edit the plan in block **624** in any appropriate manner, such as by moving the slider bars **520'***c* and **520'***d*, or any other appropriate slider bars. Alternatively, the surgeon **720** can edit the pre-operative plan in any appropriate manner, including those discussed above. Moreover, the surgeon **720** can input changes into the pre-operative plan using any appropriate input portion, such as touching the screen **740**. It will be understood, that the pre-operative plan file that is downloaded to the handheld device **712** can then be saved with the edits as the edited pre-operative plan and transmitted to the service provider **700** for appropriate edits to be re-reviewed or finalized, as discussed above. R will be understood, however, that the handheld device **712**, which can include the appropriate program, can save the file in the appropriate format and transmit it back to the service provider **700**.

Alternatively, or in addition to downloading the pre-operative plan file, the handheld device **712** can access the pre-operative plan which is stored in the main storage **704** associated with the service provider in block **606** and separate from the handheld device **712**. If the handheld device **712** accesses the pre-operative plan on the main processor, memory **702**, **704**, the handheld device **712** need only display an image representing a portion of the file on the display screen **740**. That is, the pre-operative plan and any edits or processing made to the pre-operative plan can be done solely or substantially by the main processor **702** that executes a program to manipulate and display the file. The main processor **702** and the main memory **704** need not be physically near or connected to the handheld device **712**.

The handheld device **712** can be provided to display the image, such as an image of the bone for resection, for the surgeon **720**. Therefore, the handheld device **712** may not be required to process the pre-operative plan file from the service provider **700**, but only be provided to display the pre-operative plan file and receive and transmit input from the surgeon **720**. Accordingly, even if the pre-operative plan is accessed from the service provider in block **606**, the slide bars **520'***c* and **520'***d* can be displayed on the display **742** of the handheld device **712** for input by the surgeon **720**. The inputs, however, can be directly transmitted to the main processor **702** for processing augmentation or editing of the file. This is in addition or alternative to augmenting or editing the file that has been downloaded to the handheld device **712** for re-transmission of the edited pre-operative plan to the service provider **700**.

By only or substantially accessing the pre-operative plan file from the main processor/memory **702**, **704** data transmission can be minimized from the main memory **704** or provider **700** to the handheld device **712** of the surgeon **720**. Decreased data transmission can provide increased speed and decreased data usage costs or bottlenecks in a system. In addition, the handheld device **712** can be provided or include limited memory and processing capabilities when the pre-operative plan file is only accessed with the handheld **712** and only small amounts of information are transferred, for example, regarding slide bar location and smaller portions of an image file. Accordingly, it can be provided, that a complete or pre-operative plan is transmitted to the handheld device **712**, processed completely on the handheld device **712**, edited on the handheld device **712**, saved and re-transmitted back to the service provider **700** or the handheld device **712** can only access the pre-operative plan file saved at the main memory **702** and transmit edits to the server.

Data transmission and processing can also be reduced by limiting or cropping the pre-operative plan data file. For example, as illustrated in FIG. **15**, only a lateral and distal portion of the bone is illustrated on the display device or display screen **740** of the handheld device **712**. It will be understood that an image file or image information can include the entire bone or other data saved in the image file. Accordingly, the image file can be cropped at the server or at the provider and only a portion of the image file transmitted to the handheld device **712**. This can be done repeatedly for different portions of the image data to allow for smaller file packet size or file size for transmission to the handheld device **712**. The cropping and compression of the data file can be done in substantially real-time by the server for a substantially seamless viewing and manipulation by the surgeon.

Even if the surgeon **720** accesses the data file on the main memory **704**, the surgeon **720** can review the pre-operative plan block **140'**, as discussed above, and make a determination of whether the pre-operative plan is acceptable in block **620'**. As discussed above, if the pre-operative plan is not acceptable, the NO path **622'** can be followed to allow for surgeon edits in block **624'**.

Further, regardless of the method of review of the pre-operative plan in block **140'**, the pre-operative plan can be determined to be acceptable in block **620'** and follow the YES path **626'**. When following the YES path **626'**, the implant can be designed and an alignment guide can be designed in blocks **150'** and **160'**.

The foregoing discussion discloses and describes merely exemplary arrangements of the present teachings. Furthermore, the mixing and matching of features, elements and/or functions between various embodiments is expressly contemplated herein, so that one of ordinary skill in the art would appreciate from this disclosure that features, elements and/or functions of one embodiment may be incorporated into another embodiment as appropriate, unless described otherwise above. Moreover, many modifications may be made to adapt a particular situation or material to the teachings of the invention without departing from the essential scope thereof. One skilled in the art will readily recog-

nize from such discussion, and from the accompanying drawings and claims, that various changes, modifications and variations can be made therein without departing from the spirit and scope of the present teachings as defined in the following claims.

What is claimed is:

**1**. An orthopedic device comprising:

a femoral implant having a central plane and an internal bone engagement surface that includes an anterior planar surface, an anterior chamfer surface, a distal planar surface, a posterior chamfer surface, and a posterior planar surface, wherein the internal bone engagement surface is standardized so as to be independent of an anatomy of a specific patient's joint and is one of a series of predetermined size increments for the femoral implant, each of the series of predetermined size increments varying by a set distance from others, the femoral implant further including a medial condyle width, a lateral condyle width and three medial angles and three lateral angles, each of the medial condyle width, the lateral condyle width, the three medial angles and the three lateral angles are configured to be patient-specific based on an image of the specific patient's joint, wherein the medial condyle width, the lateral condyle width, the three medial angles and the three lateral angles are designed using computer modeling to have a shape dependent upon an anatomy of the specific patient, and wherein one of the three medial angles is defined by:

an angle between the central plane and a line connecting medial-most points on an anterior edge of the distal planar surface and on a posterior edge of the distal planar surface,

an angle between the central plane and a line connecting medial-most points on a distal edge of the anterior chamfer surface and the anterior edge of the distal planar surface, or

an angle between the central plane and a line connecting medial-most points on the distal edge of the anterior chamfer surface and a proximal edge of the anterior planar surface.

**2**. The orthopedic device of claim **1**, wherein the femoral implant further includes a notch height located between the medial and lateral condyles, the notch height configured to be patient-specific based on an image of the specific patient's joint, wherein the notch height is designed using computer modeling to have a shape dependent upon the anatomy of the specific patient.

**3**. The orthopedic device of claim **1**, further comprising a surgical system including the femoral implant and a patient-specific alignment guide.

**4**. The orthopedic device of claim **3**, wherein the surgical system includes reusable instruments.

**5**. The orthopedic device of claim **3**, wherein the surgical system includes a drill guide and a cutting block.

**6**. The orthopedic device of claim **3**, wherein the surgical system includes a tracking tag.

**7**. The orthopedic device of claim **3**, wherein the patient-specific alignment guide includes a removable tracking tag.

**8**. An orthopedic device comprising:

a femoral implant having a central plane and an internal engagement surface that includes an anterior planar surface, an anterior chamfer surface, a distal planar surface, a posterior chamfer surface, and a posterior planar surface, wherein the internal bone engagement surface is standardized so as to be independent of an anatomy of a specific patient's joint and is one of a series of predetermined size increments for the femoral implant, each of the series of predetermined size increments varying by a set distance from others, the femoral implant further including patient-specific lengths including a medial condyle width, a lateral condyle width, three patient specific medial angles and three patient-specific lateral angles, wherein each of the medial condyle width, the lateral condyle width, the three medial angles and the three lateral angles are configured to be patient-specific based on an image of the specific patient's joint, wherein the medial condyle width, the lateral condyle width, the three medial angles and the three lateral angles are designed using computer modeling to have a shape dependent upon an anatomy of the specific patient, and wherein one of the three lateral angles is defined by:

an angle between the central plane and a line connecting lateral-most points on the anterior edge of the distal planar surface and on the posterior edge of the distal planar surface,

an angle between the central plane and a line connecting lateral-most points on the distal edge of the anterior chamfer surface and the anterior edge of the distal planar surface, or

an angle between the central plane and a line connecting lateral-most points on the distal edge of the anterior chamfer surface and the proximal edge of the anterior planar surface.

**9**. The orthopedic device of claim **8**, wherein the femoral implant further includes a notch height located between the medial and lateral condyles, wherein the notch height is configured to be patient-specific based on an image of the specific patient's joint, wherein the notch height is designed using computer modeling to have a shape dependent upon the anatomy of the specific patient.

**10**. The orthopedic device of claim **8**, further comprising a surgical system including the femoral implant and a patient-specific alignment guide including a removable tracking tag.

**11**. The orthopedic device of claim **10**, further comprising a disposable instrument system including only disposable instruments.

**12**. The orthopedic device of claim **11**, wherein the instrument system includes disposable patient-specific alignment guides.

**13**. An orthopedic device, comprising:

a semi-custom femoral implant having a central plane, and including a bone engagement surface that is standardized so as to be independent of an anatomy of a specific patient's joint and is one of a series of predetermined size increments for the femoral implant, each of the series of predetermined size increments varying by a set distance from others and an articulating surface,

wherein the non-patient-specific bone engagement surface includes an anterior planar surface, an anterior chamfer surface, a distal planar surface, a posterior chamfer surface, and a posterior planar surface;

the articulating surface includes a medial condyle and a lateral condyle separated by a notch, the notch being located along the central plane; and

the articulating surface includes plurality of patient-specific features configured to be patient-specific based on an image of the specific patient's joint and designed using computer modeling to have a shape dependent upon an anatomy of the specific patient including:

a medial condyle width;

a lateral condyle width;

a first medial angle defined by an angle between the central plane and a line connecting medial-most points on an anterior edge of the distal planar surface and on a posterior edge of the distal planar surface;

a second medial angle defined by an angle between the central plane and a line connecting medial-most points on a distal edge of the anterior chamfer surface and the anterior edge of the distal planar surface;

a third medial angle defined by an angle between the central plane and a line connecting medial-most points on the distal edge of the anterior chamfer surface and a proximal edge of the anterior planar surface;

a first lateral angle defined by an angle between the central plane and a line connecting lateral-most points on the anterior edge of the distal planar surface and on the posterior edge of the distal planar surface;

a second lateral angle defined by an angle between the central plane and a line connecting lateral-most points on the distal edge of the anterior chamfer surface and the anterior edge of the distal planar surface;

a third lateral angle defined by an angle between the central plane and a line connecting lateral-most points on the distal edge of the anterior chamfer surface and the proximal edge of the anterior planar surface.

**14**. The orthopedic device of claim **13**, wherein one of the plurality of patient-specific features is a notch height defined by a distance between the posterior planar surface and the most anterior point of the notch.

**15**. The orthopedic device of claim **13**, further comprising a surgical system including the femoral implant and a patient-specific alignment guide.

**16**. The orthopedic device of claim **15**, wherein the surgical system includes reusable instruments.

**17**. The orthopedic device of claim **15**, wherein the surgical system includes a drill guide and a cutting block.

**18**. The orthopedic device of claim **15**, wherein the surgical system includes a tracking tag.

**19**. The orthopedic device of claim **15**, wherein the patient-specific alignment guide includes a removable tracking tag.

* * * * *