US006374311B1

(12) **United States Patent**
Mahany et al.

(10) **Patent No.: US 6,374,311 B1**
(45) **Date of Patent: *Apr. 16, 2002**

(54) **COMMUNICATION NETWORK HAVING A PLURALITY OF BRIDGING NODES WHICH TRANSMIT A BEACON TO TERMINAL NODES IN POWER SAVING STATE THAT IT HAS MESSAGES AWAITING DELIVERY**

(75) Inventors: **Ronald L. Mahany**; **Robert C. Meier**, both of Cedar Rapids; **Ronald E. Luse**, Marion, all of IA (US)

(73) Assignee: **Intermec IP Corp.**, Woodland Hills, CA (US)

(*) Notice: This patent issued on a continued prosecution application filed under 37 CFR 1.53(d), and is subject to the twenty year patent term provisions of 35 U.S.C. 154(a)(2).

Subject to any disclaimer, the term of this patent is extended or adjusted under 35 U.S.C. 154(b) by 0 days.

This patent is subject to a terminal disclaimer.

(21) Appl. No.: **09/060,287**

(22) Filed: **Apr. 14, 1998**

Related U.S. Application Data

(63) Continuation-in-part of application No. 08/545,108, filed on Oct. 19, 1995, now Pat. No. 5,940,771, which is a continuation of application No. 07/947,102, filed on Sep. 14, 1992, now abandoned, which is a continuation-in-part of application No. 07/907,927, filed on Jun. 30, 1992, now abandoned, which is a continuation-in-part of application No. PCT/US92/03982, filed on May 13, 1992, now abandoned, and a continuation-in-part of application No. 07/857,603, filed on Mar. 30, 1992, now abandoned, and a continuation-in-part of application No. 07/802,348, filed on Dec. 4, 1991, now abandoned, which is a continuation-in-part of application No. 07/790,946, filed on Nov. 12, 1991, now abandoned.

(51) **Int. Cl.**[7] **G06F 13/372**

(52) **U.S. Cl.** **710/18**; 710/46; 709/227; 709/304; 713/320; 713/321; 713/323; 713/324; 455/343; 455/524; 455/517; 375/132; 375/202; 375/220; 370/329; 370/351

(58) **Field of Search** 710/18, 46; 713/320, 713/323, 324; 709/227, 304; 455/343, 524; 340/825.47; 370/311

(56) **References Cited**

U.S. PATENT DOCUMENTS

3,781,815	A	12/1973	Boudreau et al.	709/234
4,164,628	A	8/1979	Ward et al.	375/208

(List continued on next page.)

FOREIGN PATENT DOCUMENTS

EP	281334	9/1988
JP	53-10206	1/1978
WO	WO9202084	2/1992

OTHER PUBLICATIONS

Backes, "Transparent Bridges for Interconnection of IEE 802 LANs" IEEE Network, vol. 2, No. 1, pp. 5–9, Jan. 1988.

(List continued on next page.)

Primary Examiner—Thomas Lee
Assistant Examiner—Tammara Peyton
(74) *Attorney, Agent, or Firm*—Akin, Gump, Strauss, Hauer & Feld, L.L.P.; Gregory K. Goshorn

(57) **ABSTRACT**

An apparatus and a method for routing data in a radio data communication system having one or more host computers, one or more intermediate base stations, and one or more RF terminals organizes the intermediate base stations into an optimal spanning-tree network to control the routing of data to and from the RF terminals and the host computer efficiently and dynamically. Communication between the host computer and the RF terminals is achieved by using the network of intermediate base stations to transmit the data.

31 Claims, 2 Drawing Sheets

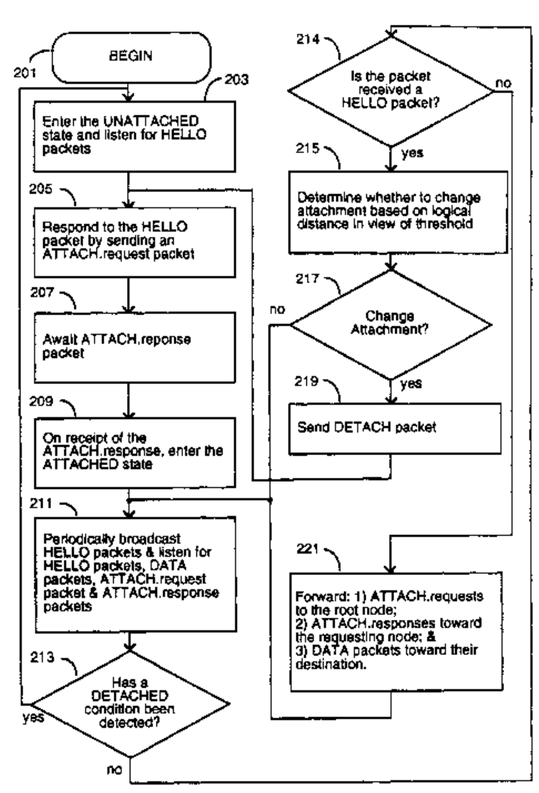

U.S. PATENT DOCUMENTS

4,332,027	A		5/1982	Malcom et al.	370/448
4,352,955	A		10/1982	Kai et al.	370/314
4,369,443	A		1/1983	Giallanza et al.	340/825.47
4,420,682	A		12/1983	Huber	235/472
4,630,314	A	*	12/1986	Smith	455/505
4,644,532	A		2/1987	George et al.	370/255
4,663,706	A		5/1987	Allen et al.	709/234
4,670,899	A		6/1987	Brody et al.	455/453
4,679,244	A		7/1987	Kawasaki et al.	455/515
4,689,786	A		8/1987	Sidhu et al.	370/255
4,725,992	A		2/1988	NcNatt et al.	367/77
4,736,461	A	*	4/1988	Kawasaki et al.	455/343
4,747,126	A		5/1988	Hood et al.	379/74
4,748,658	A		5/1988	Gopal et al.	379/221
4,789,983	A		12/1988	Acampora et al.	370/349
4,794,649	A	*	12/1988	Fujiwara	455/9
4,835,372	A		5/1989	Gombrich et al.	235/375
4,864,559	A		9/1989	Perlman	370/256
4,884,266	A		11/1989	Pflaumer	370/545
4,885,780	A		12/1989	Gopal et al.	379/221
4,910,794	A		3/1990	Mahany	455/67.4
4,916,441	A		4/1990	Gombrich	340/825.3
4,916,726	A		4/1990	Morley, Jr. et al.	379/88
4,924,462	A		5/1990	Sojka	370/449
4,926,064	A		5/1990	Tapang	706/26
4,940,974	A		7/1990	Sojka	340/825.08
4,942,552	A		7/1990	Merrill et al.	710/6
4,956,783	A		9/1990	Teranishi et al.	364/468.18
4,995,099	A	*	2/1991	Davis	455/343
5,008,882	A		4/1991	Peterson et al.	370/406
5,018,133	A		5/1991	Tsukakoshi et al.	370/256
5,027,427	A		6/1991	Shimizu	455/517
5,029,183	A		7/1991	Tymes	375/206
5,031,098	A		7/1991	Miller et al.	705/21
5,055,660	A		10/1991	Bertagna et al.	235/472
5,056,085	A		10/1991	Vu	370/400
5,058,200	A		10/1991	Huang et al.	455/456
5,065,003	A		11/1991	Wakatsuki et al.	235/472
5,070,536	A		12/1991	Mahany et al.	455/67.4
5,099,509	A	*	3/1992	Morganstein et al.	379/84
5,103,461	A	*	4/1992	Tymes	375/206
5,117,422	A		5/1992	Hauptschein et al.	370/255
5,128,932	A		7/1992	Li	370/236
5,128,938	A	*	7/1992	Borras	370/311
5,142,531	A		8/1992	Kirby	370/254
5,142,550	A		8/1992	Tymes	375/206
5,150,360	A	*	9/1992	Perlman et al.	370/402
5,157,687	A		10/1992	Tymes	375/206
5,163,080	A	*	11/1992	Amoroso et al.	379/33
5,241,542	A	*	8/1993	Natarajan et al.	370/311
5,260,990	A	*	11/1993	MeLampy et al.	379/67
5,276,680	A	*	1/1994	Messenger	370/506
5,280,480	A		1/1994	Pitt et al.	370/256
5,280,650	A	*	1/1994	Sobti	375/375
5,283,568	A	*	2/1994	Asai et al.	370/476
5,291,479	A	*	3/1994	Vaziri et al.	370/264
5,295,154	A		3/1994	Meier et al.	370/351
5,317,691	A		5/1994	Traeger	709/250
5,394,436	A		2/1995	Meier et al.	375/202
5,425,051	A	*	6/1995	Mahany	375/202
5,708,680	A		1/1998	Gollnick et al.	375/220
5,844,893	A		12/1998	Gollnick et al.	370/329
5,940,771	A		8/1999	Gollnick et al.	455/517

OTHER PUBLICATIONS

L. Kleinrock and F.A. Tobagi, "Packet Switching in Radio Channels; Part IV–Stability Considerations and Dynamic Control in Carrier Sense Multiple Access," IEEE Transactions on Communications, vol. COM–25, No. 10, Oct. 1977.

M. B. Pursley, "The Role of Spread Spectrum in Packet Radio Networks," Proceedings of the IEEE, vol. 75, No. 1, Jan. 1987.

J. O. Onunga and R. W. Donaldson, "Performance Analysis of CSMA with Priority Acknowledgements (CSMA/PA) on Noisy Data Networks with Finite User Population, " IEEE Transactions on Communications, vol. 39, No. 7, Jul. 1991.

L. Kleinrock and J. Silvester, "Spatial Rouse in Multihop Packet Radio Networks," Proceedings of the IEEE, vol. 75, No. 1, Jan. 1987.

International Standard ISO/DIS 8802–2.2.

A. S. Tanenbaum, "Computer Networks," Prentice Hall, Second Edition.

D.E. Comer, "Internetworking with TCP/IP", Prentice Hall.

* cited by examiner

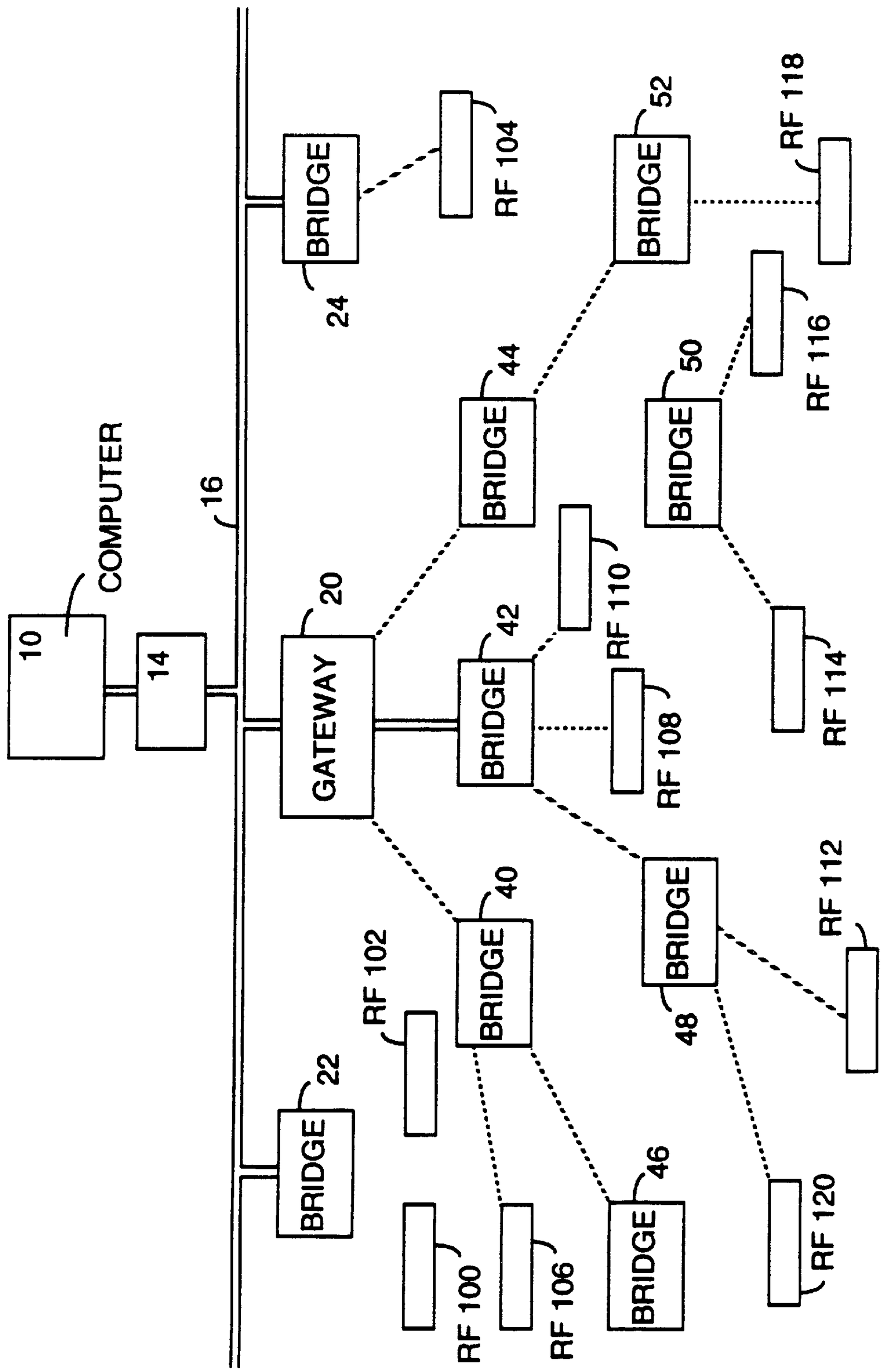
COMPUTER
10
14
16
GATEWAY
20
BRIDGE
22
BRIDGE
24
BRIDGE
40
BRIDGE
42
BRIDGE
44
BRIDGE
46
BRIDGE
48
BRIDGE
50
BRIDGE
52
RF 100
RF 102
RF 104
RF 106
RF 108
RF 110
RF 112
RF 114
RF 116
RF 118
RF 120

FIG. 1

FIG. 2

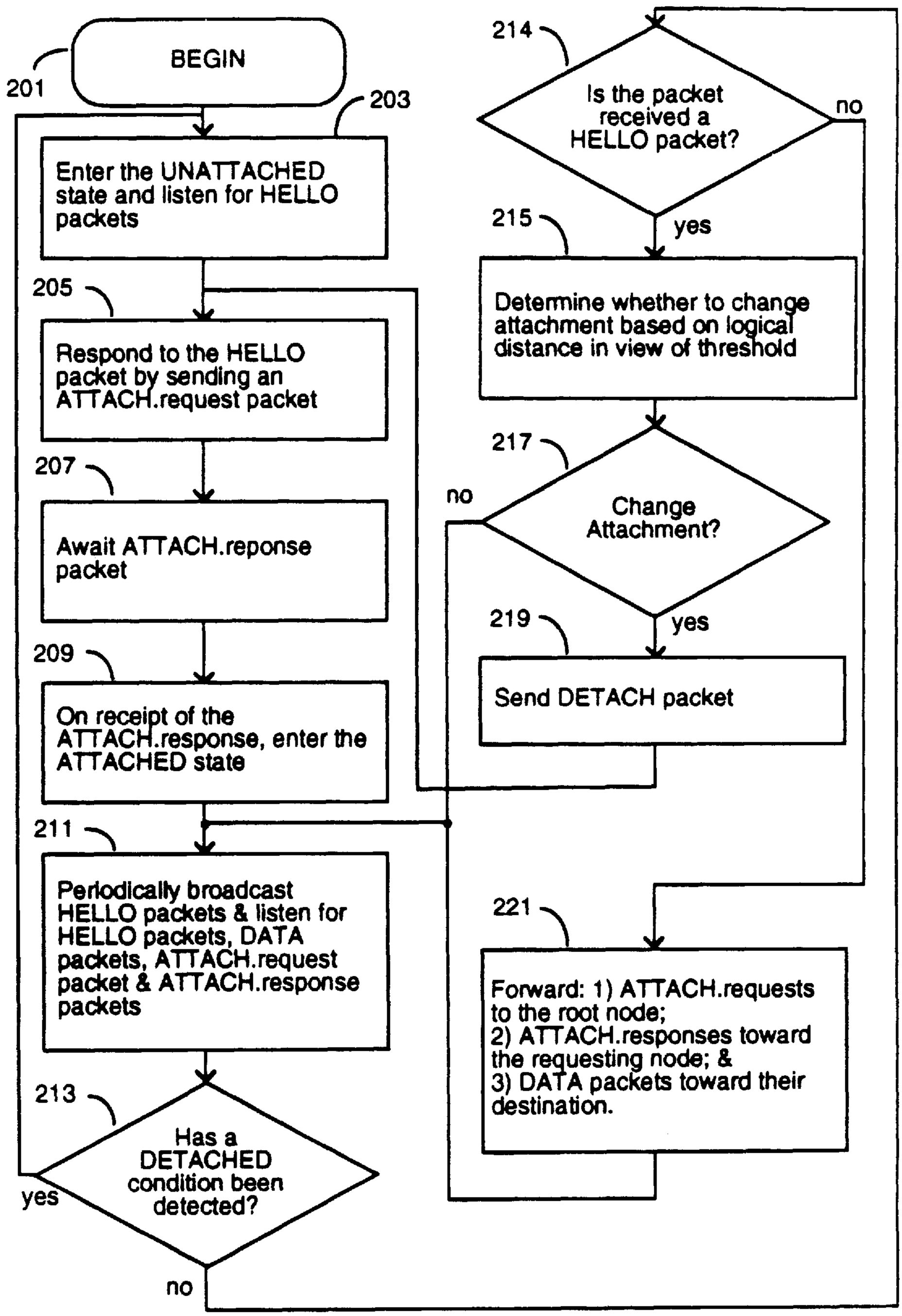
BEGIN
201
203
Enter the UNATTACHED state and listen for HELLO packets
205
Respond to the HELLO packet by sending an ATTACH.request packet
207
Await ATTACH.reponse packet
209
On receipt of the ATTACH.response, enter the ATTACHED state
211
Periodically broadcast HELLO packets & listen for HELLO packets, DATA packets, ATTACH.request packet & ATTACH.response packets
213
Has a DETACHED condition been detected?
yes
no
214
Is the packet received a HELLO packet?
no
yes
215
Determine whether to change attachment based on logical distance in view of threshold
217
Change Attachment?
no
yes
219
Send DETACH packet
221
Forward: 1) ATTACH.requests to the root node;
2) ATTACH.responses toward the requesting node; &
3) DATA packets toward their destination.

COMMUNICATION NETWORK HAVING A PLURALITY OF BRIDGING NODES WHICH TRANSMIT A BEACON TO TERMINAL NODES IN POWER SAVING STATE THAT IT HAS MESSAGES AWAITING DELIVERY

CROSS-REFERENCE TO RELATED APPLICATION

The present application is a continuation in part of application Ser. No. 08/545,108 filed Oct. 19, 1995, now U.S. Pat. No. 5,940,771 issued Aug. 17, 1999, which itself is a continuation of U.S. application Ser. No. 07/947,102 filed Sep. 14, 1992, now abandoned. Said application Ser. No. 07/947,102 is a continuation in part of U.S. application Ser. No. 07/907,927 filed Jun. 30, 1992, now abandoned, which is a continuation in part of: 1) U.S. application Ser. No. 07/857,603 filed Mar. 30, 1992, now abandoned; 2) PCT Application No. PCT/US92/03982 filed May 13, 1992, now abandoned; and 3) U.S. application Ser. No. 07/802,348 filed Dec. 4, 1991, now abandoned, which is itself a continuation in part of U.S. application Ser. No. 07/790,946 filed Nov. 12, 1991, now abandoned.

BACKGROUND OF TEE INVENTION

In a typical radio data communication system having one or more host computers and multiple RF terminals, communication between a host computer and an RF terminal is provided by one or more base stations. Depending upon the application and the operating conditions, a large number of these base stations may be required to adequately serve the system. For example, a radio data communication system installed in a large factory may require dozens of base stations in order to cover the entire factory floor.

In earlier RF (Radio Frequency) data communication systems, the base stations were typically connected directly to a host computer through multi-dropped connections to an Ethernet communication line. To communicate between an RF terminal and a host computer, in such a system, the RF terminal sends data to a base station and the base station passes the data directly to the host computer. Communicating with a host computer through a base station in this manner is commonly known as hopping. These earlier RF data communication systems used a single-hop method of communication.

In order to cover a larger area with an RF data communication system and to take advantage of the deregulation of the spread-spectrum radio frequencies, later-developed RF data communication systems are organized into layers of base stations. As in earlier RF data communications systems, a typical system includes multiple base stations which communicate directly with the RF terminals and the host computer. In addition, the system also includes intermediate stations that communicate with the RF terminals, the multiple base stations, and other intermediate stations. In such a system, communication from an RF terminal to a host computer may be achieved, for example, by having the RF terminal send data to an intermediate station, the intermediate station send the data to a base station, and the base station send the data directly to the host computer. Communicating with a host computer through more than one station is commonly known as a multiple-hop communication system.

Difficulties often arise in maintaining the integrity of such multiple-hop RF data communication systems. The system must be able to handle both wireless and hard-wired station connections, efficient dynamic routing of data information, RF terminal mobility, and interference from many different sources.

SUMMARY OF THE INVENTION

The present invention solves many of the problems inherent in a multiple-hop data communication system. The present invention comprises an RF Local-Area Network capable of efficient and dynamic handling of data by routing communications between the RF Terminals and the host computer through a network of intermediate base stations.

In one embodiment of the present invention, the RF data communication system contains one or more host computers and multiple gateways, bridges, and RF terminals. Gateways are used to pass messages to and from a host computer and the RF Network. A host port is used to provide a link between the gateway and the host computer. In addition, gateways may include bridging functions and may pass information from one RF terminal to another. Bridges are intermediate relay nodes which repeat data messages. Bridges can repeat data to and from bridges, gateways and RF terminals and are used to extend the range of the gateways.

The RF terminals are attached logically to the host computer and use a network formed by a gateway and the bridges to communicate with the host computer. To set up the network, an optimal configuration for conducting network communication spanning tree is created to control the flow of data communication. To aid understanding by providing a more visual description, this configuration is referred to hereafter as a "spanning tree" or "optimal spanning tree".

Specifically, root of the spanning tree are the gateways; the branches are the bridges; and non-bridging stations, such as RF terminals, are the leaves of the tree. Data are sent along the branches of the newly created optimal spanning tree. Nodes in the network use a backward learning technique to route packets along the correct branches.

One object of the present invention is to route data efficiently, dynamically, and without looping. Another object of the present invention is to make the routing of the data transparent to the RF terminals. The RF terminals, transmitting data intended for the host computer, are unaffected by the means ultimately used by the RF Network to deliver their data.

It is a further object of the present invention for the network to be capable of handling RF terminal mobility and lost nodes with minimal impact on the entire RF data communication system.

BRIEF DESCRIPTION OF THE DRAWINGS

FIG. **1** is a functional block diagram of an RF data communication system incorporating the RF local-area network of the present invention.

FIG. **2** is a flow diagram illustrating a bridging node's construction and maintenance of the spanning tree.

DETAILED DESCRIPTION OF THE INVENTION

FIG. **1** is a functional block diagram of an RF data communication system. In one embodiment of the present invention, the RF data communication system has a host computer **10**, a network controller **14** and bridges **22** and **24** attached to a data communication link **16**. Also attached to the data communication link **16** is a gateway **20** which acts as the root node for the spanning tree of the RF data network of the present invention. A bridge **42** is attached to the gateway **20** through a hard-wired communication link and bridges **40** and **44** are logically attached to gateway **20** by

two independent RF links. Additional bridges **46**, **48**, **50** and **52** are also connected to the RF Network and are shown in the FIG. **1**. Note that, although shown separate from the host computer **10**, the gateway **20** (the spanning tree root node) may be part of host computer **10**.

The FIG. **1** further shows RF terminals **100** and **102** attached to bridge **22** via RF links and RF terminal **104** attached to bridge **24** via an RF link. Also, RF terminals **106**, **108**, **110**, **112**, **114**, **116**, **118**, and **120** can be seen logically attached to the RF Network through their respective RF links. The RF terminals in FIG. **1** are representative of non-bridging stations. In alternate embodiments of the present invention, the RF Network could contain any type of device capable of supporting the functions needed to communicate in the RF Network such as hard-wired terminals, remote printers, stationary bar code scanners, or the like. The RP data communication system, as shown in FIG. **1**, represents the configuration of the system at a discrete moment in time after the initialization of the system. The RF links, as shown, are dynamic and subject to change. For example, changes in the structure of the RF data communication system can be caused by movement of the RF terminals and by interference that affects the RF communication links.

In the preferred embodiment, the host computer **10** is an IBM 3090, the network controller **14** is a model RC3250 of the Norand Corporation, the data communication link **16** is an Ethernet link, the nodes **20**, **22**, **24**, **40**, **42**, **44**, **46**, **48**, **50** and **52** are intelligent base transceiver units of the type RB4000 of the Norand Corporation, and the RF terminals **100**, **102**, **104**, **106**, **108**, **110**, **112**, **114**, **116**, **118** and **120** are of type RT1100 of the Norand Corporation.

The optimal spanning tree, which provides the data pathways throughout the communication system, is stored and maintained by the network as a whole. Each node in the network stores and modifies information which specifies how local communication traffic should flow. Optimal spanning trees assure efficient, adaptive (dynamic) routing of information without looping.

To initialize the RF data communication system, the gateway **20** and the other nodes are organized into an optimal spanning tree rooted at the gateway **20**. To form the optimal spanning tree, in the preferred embodiment the gateway **20** is assigned a status of ATTACHED and all other bridges are assigned the status UNATTACHED. The gateway **20** is considered attached to the spanning tree because it is the root node. Initially, all other bridges are unattached and lack a parent in the spanning tree. At this point, the attached gateway node **20** periodically broadcasts a specific type of polling packet referred to hereafter as "HELLO packets". The HELLO packets can be broadcast using known methods of communicating via radio frequency (RF) link or via a direct wire link. In the preferred embodiment of the present invention, the RF link is comprised of spread-spectrum transmissions using a polling protocol. Although a polling protocol is preferred, a carrier-sense multiple-access (CSMA), busy-tone, or any other protocol might also manage the communication traffic on the RF link.

HELLO packets contain 1) the address of the sender, 2) the hopping distance that the sender is from the root, 3) a source address, 4) a count of nodes in the subtree which flow through that bridge, and 5) a list of system parameters. Each node in the network is assigned a unique network service address and a node-type identifier to distinguish between different nodes and different node types. The distance of a node from the root node is measured in hops times the bandwidth of each hop. The gateway root is considered to be zero hops away from itself.

FIG. **2** is a flow diagram illustrating a bridge's participation in the construction and maintenance of the spanning tree. At a block **201**, the bridge begins the local construction of the spanning tree upon power-up. Next, at a block **203**, the bridge enters the UNATTACHED state, listening for HELLO packets (also referred to as HELLO messages herein) that are broadcast.

By listening to the HELLO messages, bridges can learn which nodes are attached to the spanning tree. At a block **205**, the bridge responds to a HELLO packet received by sending an ATTACH.request packet to the device that sent the received HELLO packet. The ATTACH.request packet is thereafter forwarded towards and to the root node which responds by sending an ATTACH.response packet back down towards and to the bridge.

The bridge awaits the ATTACH.response packet at a block **207**. Upon receipt of the ATTACH.response packet, at a block **209**, the bridge enters an ATTACHED state. Thereafter, at a block **211**, the bridge begins periodically broadcasting HELLO packets and begins forwarding or relaying packets received. Specifically, between HELLO packet broadcasts, the bridge listens for HELLO, DATA, ATTACH.request and ATTACH.response packets broadcast by other devices in the communication network. Upon receiving such a packet, the bridge branches to a block **213**. At the block **213**, if the bridge detects that it has become detached from the spanning tree the bridge will branch back to the block **203** to establish attachment. Note that although the illustration in FIG. **2** places block **213** immediately after the block **211**, the bridges functionality illustrated in block **213** is actually distributed throughout the flow diagram.

If at the block **213** detachment has not occurred, at a block **214**, the bridge determines if the received packet is a HELLO packet. If so, the bridge analyzes the contents of the HELLO packet at a block **215** to determine whether to change its attachment point in the spanning tree. In a preferred embodiment, the bridge attempts to maintain attachment to the spanning tree at the node that is logically closest to the root node.

The logical distance, in a preferred embodiment, is based upon the number of hops needed to reach the root node and the bandwidth of those hops. The distance the attached node is away from the root node is found in the second field of the HELLO message that is broadcast. In another embodiment of the present invention, the bridges consider the number of nodes attached to the attached node as well as the logical distance of the attached node from the root node. If an attached node is overloaded with other attached nodes, the unattached bridge may request attachment to the less loaded node, or to a more loaded node as described above in networks having regions of substantial RF overlap. In yet another embodiment, to avoid instability in the spanning tree, the bridge would only conclude to change attachment if the logical distance of the potential replacement is greater than a threshold value.

If no change in attachment is concluded, at a block **217** the bridge branches back to the block **211**. If a determination is made to change attachment, a DETACH packet is sent to the root as illustrated at a block **219**. After sending the DETACH packet, the bridge branches back to the block **205** to attach to the new spanning tree node. Note that the order of shown for detachment and attachment is only illustrative and can be reversed.

Referring back to the block **214**, if the received packet (at block **211**) is not a HELLO packet, the bridge branches to a

block **221** to forward the received packet through the spanning tree. Afterwards, the bridge branches back to the block **211** to continue the process.

Specifically, once attached, the attached bridge begins broadcasting HELLO packets (at the block **211**) seeking to have all unattached bridges (or other network devices) attach to the attached bridge. Upon receiving an ATTACH.request packet, the bridge forwards that packet toward the root node (through the blocks **211**, **213**, **214** and **221**. On its path toward the root, each node records the necessary information of how to reach requesting bridge. This process is called "backward learning" herein, and is discussed more fully below. As a result of the backward learning, once the root node receives the ATTACH.request packet, an ATTACH-.response packet can be sent through the spanning tree to the bridge requesting attachment.

After attaching to an attached node, the newly attached bridge (the child) must determine its distance from the root node. To arrive at the distance of the child from the root node, the child adds the broadcast distance of its parent from the root node to the distance of the child from its parent. In the preferred embodiment, the distance of a child from its parent is based on the bandwidth of the data communication link. For example, if the child attaches to its parent via a hard-wired link (data rate 26,000 baud), then the distance of that communication link might equal, for example, one hop. However, if the child attaches to its parent via an RF link (data rate 9600 baud), then the distance of that communication link might correspondingly be equal 3 hops. The number of the hop corresponds directly to the communication speed of the link. This may not only take into consideration baud rate, but also such factors as channel interference.

Initially, only the root gateway node **20** is broadcasting HELLO messages and only nodes **40**, **42** and **44** are within range of the HELLO messages broadcast by the gateway. Therefore, after the listening period has expired, nodes **40**, **42** and **44** request attachment to the gateway node **20**. The unattached nodes **40**, **42**, and **44** send ATTACH.request packets and the attached gateway node **20** acknowledges the ATTACH.request packets with local ATTACH.confirm packets. The newly attached bridges are assigned the status ATTACHED and begin broadcasting their own HELLO packets, looking for other unattached bridges. Again, the remaining unattached nodes attempt to attach to the attached nodes that are logically closest to the root node. For example, node **48** is within range of HELLO messages from both nodes **40** and **42**. However, node **40** is three hops, via an RF link, away from the gateway root node **20** and node **42** is only one hop, via a hard-wired link, away from the gateway root node **20**. Therefore, node **48** attaches to node **42**, the closest nods to the gateway root node **20**.

The sending of HELLO messages, ATTACH.request packets and ATTACH.confirm packets continues until the entire spanning tree is established. In addition, attached bridges may also respond to HELLO messages. If a HELLO message indicates that a much closer route to the root node is available, the attached bridge sends a DETACH packet to its old parent and an ATTACH.request packet to the closer node. To avoid instability in the system and to avoid overloading any given node, an attached bridge would only respond to a HELLO message if the hop count in a HELLO packet is greater than a certain threshold value, CHANGE_THRESHOLD. In the preferred embodiment, the value of the CHANGE_THRESHOLD equals 3. In this manner, an optimal spanning tree is formed that is capable of transmitting data without looping.

Nodes, other than the gateway root node, after acknowledging an ATTACH.request packet from a previously unattached node, will send the ATTACH.request packet up the branches of the spanning tree to the gateway root node. As the ATTACH.request packet is being sent to the gateway root node, other nodes attached on the same branch record the destination of the newly attached node in their routing entry table. When the ATTACH.request packet reaches the gateway root node, the gateway root node returns an end-to-end ATTACH.confirm packet.

After the spanning tree is initialized, the RF terminals listen for periodically broadcasted Hello packets to determine which attached nodes are in range. After receiving HELLO messages from attached nodes, an RF terminal responding to an appropriate poll sends an ATTACH.request packet to attach to the node logically closest to the root. For example, RF terminal **110** is physically closer to node **44**. However, node **44** is three hops, via an RF link, away from the gateway root node **20** and node **42** is only one hop, via a hard-wired link, away from the gateway root node **20**. Therefore, RF terminal **110**, after hearing HELLO messages from both nodes **42** and **44**, attaches to node **42**, the closest node to the gateway root node **20**. Similarly, RF terminal **114** hears HELLO messages from nodes **48** and **50**. Nodes **48** and **50** are both four hops away from the gateway root node **20**. However, node **48** has two RF terminals **110** and **112** already attached to it while node **50** has only one RF terminal **116** attached to it. Therefore, RF terminal **114** will attach to node **50**, the least busy node of equal distance to the gateway root node **20**. Attaching to the least busy node proves to be the most efficient practice when the communication system has little overlap in the RF communication regions. In another embodiment, however, instead of attaching to the least busy node of equal distance to the gateway root node **20**, the attachment is established with the busiest node.

The attached node acknowledges the ATTACH.request and sends the ATTACH.request packet to the gateway root node. Then, the gateway root node returns an end-to-end ATTACH.confirm packet. In this manner, the end-to-end ATTACH.request functions as a discovery packet enabling the gateway root node, and all other nodes along the same branch, to learn the address of the RF terminal quickly. This process is called backward learning. Nodes learn the addresses of terminals by monitoring the traffic from terminals to the root. If a packet arrives from a terminal that is not contained in the routing table of the node, an entry is made in the routing table. The entry includes the terminal address and the address of the node that sent the packet. In addition, an entry timer is set for that terminal. The entry timer is used to determine when RF terminals are actively using the attached node. Nodes maintain entries only for terminals that are actively using the node for communication. If the entry timer expires due to lack of communication, the RF terminal entry is purged from the routing table.

The RF links among the RF terminals, the bridges, and the gateway are often lost. Therefore, a connection-oriented data-link service is used to maintain the logical node-to-node links. In the absence of network traffic, periodic messages are sent and received to ensure the stability of the RF link. As a result, the loss of a link is quickly detected and the RF Network can attempt to establish a new RF link before data transmission from the host computer to an RF terminal is adversely affected.

Communication between terminals and the host computer is accomplished by using the resulting RF Network. To communicate with the host computer, an RF terminal sends

a data packet in response to a poll from the bridge closest to the host computer.

Typically, the RF terminal is attached to the bridge closest to the host computer. However, RF terminals are constantly listening for HELLO and polling messages from other bridges and may attach to, and then communicate with, a bridge in the table of bridges that is closer to the particular RF terminal.

Under certain operating conditions, duplicate data packets can be transmitted in the RF Network. For example, it is possible for an RF terminal to transmit a data packet to its attached node, for the node to transmit the acknowledgement frame, and for the RF terminal not to receive the acknowledgement. Under such circumstances, the RF terminal will retransmit the data. If the duplicate data packet is updated into the database of the host computer, the database would become corrupt. Therefore, the RF Network of the present invention detects duplicate data packets. To ensure data integrity, each set of data transmissions receives a sequence number. The sequence numbers are continuously incremented, and duplicate sequence numbers are not accepted.

When a bridge receives a data packet from a terminal directed to the host computer, the bridge forwards the data packet to the parent node on the branch. The parent node then forwards the data packet to its parent node. The forwarding of the data packet continues until the gateway root node receives the data packet and sends it to the host computer. Similarly, when a packet arrives at a node from the host computer directed to an RF terminal, the node checks its routing entry table and forwards the data packet to its child node which is along the branch destined for the RF terminal. It is not necessary for the nodes along the branch containing the RF terminal to know the ultimate location of the RF terminal. The forwarding of the data packet continues until the data packet reaches the final node on the branch, which then forwards the data packet directly to the terminal itself.

Communication is also possible between RF terminals. To communicate with another RF terminal, the RF terminal sends a data packet to its attached bridge. When the bridge receives the data packet from a terminal directed to the host computer, the bridge checks to see if the destination address of the RF terminal is located within its routing table. If it is, the bridge simply sends the message to the intended RF terminal. It not, the bridge forwards the data packet to its parent node. The forwarding of the data packet up the branch continues until a common parent between the RF terminals is found. Then, the common parent (often the gateway node itself) sends the data packet to the intended RF terminal via the branches of the RF Network.

During the normal operation of the RF Network, RF terminals can become lost or unattached to their attached node. If an RF terminal becomes unattached, for whatever reason, its routing entry is purged and the RF terminal listens for HELLO or polling messages from any attached nodes in range. After receiving HELLO or polling messages from attached nodes, the RF terminal sends an ATTACH.request packet to the attached node closest to the root. That attached node acknowledges the ATTACH.request and sends the ATTACH.request packet onto the gateway root node. Then, the gateway root node returns an end-to-end ATTACH.confirm packet.

Bridges can also become lost or unattached during normal operations of the RF Network. If a bridge becomes lost or unattached, all routing entries containing the bridge are purged. The bridge then broadcasts a HELLO.request with a global bridge destination address. Attached nodes will broadcast HELLO packets immediately if they receive an ATTACH.request packet with a global destination address. This helps the lost node re-attach. Then, the bridge enters the LISTEN state to learn which attached nodes are within range. The unattached bridge analyzes the contents of broadcast HELLO messages to determine whether to request attachment to the broadcasting node. Again, the bridge attempts to attach to the node that is logically closest to the root node. After attaching to the closest node, the bridge begins broadcasting HELLO messages to solicit ATTACH-.requests from other nodes or RF terminals.

The spread-spectrum system provides a hierarchical radio frequency network of on-line terminals for data entry and message transfer in a mobile environment. The network is characterized by sporadic data traffic over multiple-hop data paths consisting of RS485 or ethernet wired links and single-channel direct sequenced spread spectrum links. The network architecture is complicated by moving, hidden, and sleeping nodes. The spread spectrum system consists of the following types of devices:

Terminal controller—A gateway which passes messages from a host port to the RF network; and which passes messages from the network to the host port. The host port (directly or indirectly) provides a link between the controller and a "host" computer to which the terminals are logically attached.

Base station—An intermediate relay node which is used to extend the range of the controller node. Base station-to-controller or base station-to-base station-links can be wired or wireless RF.

Terminal—Norand RF hand-held terminals, printers, etc. In addition, a controller device has a terminal component.

The devices are logically organized as nodes in an (optimal) spanning tree, with the controller at the root, internal nodes in base stations or controllers on branches of the tree, and terminal nodes as (possibly mobile) leaves on the tree. Like a sink tree, nodes closer to the root of the spanning tree are said to be "downstream" from nodes which are further away. Conversely, all nodes are "upstream" from the root. Packets are only sent along branches of the spanning tree. Nodes in the network use a "BACKWARD LEARNING" technique to route packets along the branches of the spanning tree.

Devices in the spanning tree are logically categorized as one of the following three node types:

1) Root (or root bridge)—A controller device which functions as the root bridge of the network spanning tree. In the preferred embodiment, the spanning tree has a single root node. Initially, all controllers are root candidates from which a root node is selected. This selection may be based on the hopping distance to the host, preset priority, random selection, etc.
2) Bridge—An internal node in the spanning tree which is used to "bridge" terminal nodes together into an interconnected network. The root node is also considered a bridge and the term "bridge" may be used to refer to all non-terminal nodes or all non-terminal nodes except the root, depending on the context herein. A bridge node consists of a network interface function and a routing function.
3) Terminal—leaf node in the spanning tree. A terminal node can be viewed as the software entity that terminates a branch in the spanning tree.

A controller device contains a terminal node(s) and a bridge node. The bridge node is the root node if the

controller is functioning as the root bridge. A base station contains a bridge node. A terminal device contains a terminal node and must have a network interface function. A "bridging entity" refers to a bridge node or to the network interface function in a terminal.

The basic requirements of the system are the following.

a) Wired or wireless node connections.

b) Network layer transparency.

c) Dynamic/automatic network routing configuration.

d) Terminal mobility. Terminals should be able to move about the RF network without losing an end-to-end connection.

e) Ability to accommodate sleeping terminals.

f) Ability to locate terminals quickly.

g) Built-in redundancy. Lost nodes should have minimal impact on the network.

h) Physical link independence. The bridging algorithm is consistent across heterogeneous physical links.

The software for the spread-spectrum system is functionally layered as follows.

Medium Access Control (MAC)

The MAC layer is responsible for providing reliable transmission between any two nodes in the network (i.e. terminal-to-bridge). The MAC has a channel access control component and a link control component. The link control component facilitates and regulates point-to-point frame transfers in the absence of collision detection. The MAC channel access control component regulates access to the network. Note that herein, the MAC layer is also referred to as the Data Link layer.

Bridging Layer

The bridging layer, which is also referred to herein as the network layer, has several functions as follows.

1. The bridging layer uses a "HELLO protocol" to organize nodes in the network into an optimal spanning tree rooted at the root bridge. The spanning tree is used to prevent loops in the topology. Interior branches of the spanning tree are relatively stable (i.e. controller and relay stations do not move often). Terminals, which are leaves on the spanning three, may become unattached, and must be reattached, frequently.
2. The bridging layer routes packets from terminals to the host, from the host to terminals, and from terminals to terminals along branches of the spanning tree.
3. The bridging layer provides a service for storing packets for SLEEPING terminals. Packets which cannot be delivered immediately can be saved by the bridging entity in a parent node for one or more HELLO times.
4. The bridging layer propagates lost node information throughout the spanning tree.
5. The bridging layer maintains the spanning tree links.
6. The bridging layer distributes network interface addresses.

Logical Link Control Layer

A logical link control layer, also known herein as the Transport layer herein, is responsible for providing reliable transmission between any two nodes in the network (i.e., terminal-to-base station). The data-link layer provides a connection-oriented reliable service and a connectionless unreliable service. The reliable service detects and discards duplicate packets and retransmits lost packets. The unreliable services provides a datagram facility for upper layer protocols which provide a reliable end-to-end data path. The data-link layer provides ISO layer 2 services for terminal-to-host application sessions which run on top of an end-to-end terminal-to-host transport protocol. However, the data-link layer provides transport (ISO layer 4) services for sessions contained within the SST network.

Higher Layers

For terminal-to-terminal sessions contained within the SST network, the data-link layer provides transport layer services and no additional network or transport layer is required. In this case, the MAC, bridging, and data-link layers discussed above can be viewed as a data-link layer, a network layer, and a transport layer, respectively. For terminal-to-host-application sessions, higher ISO layers exist on top of the SST data-link layer and must be implemented in the terminal and host computer, as required. This document does not define (or restrict) those layers. This document does discuss a fast-connect VMTP-like transport protocol which is used for transient internal terminal-to-terminal sessions.

Specifically, a network layer has several functions, as follows.

1) The network layer uses a "hello protocol" to organize nodes in the network into an optimal spanning tree rooted at the controller. (A spanning tree is required to prevent loops in the topology.) Interior branches of the spanning tree are relatively stable (i.e., the controller and base stations do not move often). Terminals, which are leaves on the spanning tree, become unattached, and must be reattached frequently.

2) The network layer routes messages from terminals to the host, from the host to terminals, and from terminals to terminals along branches of the spanning tree.

3) The network layer provides a service for storing messages for SLEEPING terminals. Messages which cannot be delivered immediately can be saved by the network entity in a parent node for one or more hello times.

4) The network layer propagates lost node information throughout the spanning tree.

5) The network layer maintains the spanning tree links in the absence of regular data traffic.

A transport layer is responsible for establishing and maintaining a reliable end-to-end data path between transport access points in any two nodes in the network. The transport layer provides unreliable, reliable and a transaction-oriented services. The transport layer should be immune to implementation changes in the network layer.

The responsibilities of the transport layer include the following.

1) Establishing and maintaining TCP-like connections for reliable root-to-terminal data transmission.

2) Maintaining VMTP-like transaction records for reliable transient message passing between any two nodes.

3) Detecting and discarding duplicate packets.

4) Retransmitting lost packets.

Layers 1 through 4 are self-contained within the Norand RF network, and are independent of the host computer and of terminal applications. The session layer (and any higher layers) are dependent on specific applications. Therefore, the session protocol (and higher protocols) must be implemented as required. Note that a single transport access point is sufficient to handle single sessions with multiple nodes. Multiple concurrent sessions between any two nodes could be handled with a session identifier in a session header.

Network address requirements are as follows. DLC framed contain a hop destination and source address in the DLC header. Network packets contain an end-to-end desti-

nation and a source address in the network header. Transport messages do not contain an address field; instead, a transport connection is defined by network layer source and destination address pairs. Multiple transport connections require multiple network address pairs.

The transport header contains a TRANSPORT ACCESS POINT identifier. DLC and network addresses are consistent and have the same format. Each node has a unique LONG ADDRESS which is programmed into the node at the factory. The long address is used only to obtain a SHORT ADDRESS from the root node.

The network entity in each node obtains a SHORT ADDRESS from the root node, which identifies the node uniquely. The network entity passes the short address to the DLC entity. Short addresses are used to minimize packet sizes.

Short addresses consist of the following. There is: an address length bit (short or long).

a spanning tree identified.

a node-type identifier. Node types are well known.

a unique multi-cast or broadcast node identifier.

The node-identifier parts of root addresses are well known and are constant. A default spanning tree identifier is well known by all nodes. A non-default spanning tree identifier can be entered into the root node (i.e., by a network administrator) and advertised to all other nodes in "hello" packets. The list of non-default spanning trees to which other nodes can attach must be entered into each node.

A node-type identifier of all 1's is used to specify all node types. A node identifier of all 1's is used to specify all nodes of the specified type. A DLC identifier of all 0's is used to specify a DLC entity which does not yet have an address. The all-0's address is used in DLC frames that are used to send, and receive network ADDRESS packets. (The network entity in each node filters ADDRESS packets based on the network address.)

Short-address allocation is accomplished as follows. Short node identifiers of root nodes are well known. All other nodes must obtain a short node identifier from the root. To obtain a short address, a node send an ADDRESS request packet to the root node. The source addresses (i.e., DLC and network) in the request packet are LONG ADDRESSES. The root maintains an address queue of used and unused SHORT ADDRESSES. If possible, the root selects an available short address, associates the short address with the long address of the requesting node, and returns the short address to the requesting node in an ADDRESS acknowledge packet. (Note that the destination address in the acknowledge packet is a long address.)

A node must obtain a (new) short address initially and whenever an ADDRESS-TIMEOUT inactivity period expires without having the node receive a packet from the network entity in the root.

The network entity in the root maintains addresses in the address queue in least recently used order. Whenever a packet is received, the source address is moved to the end of the queue. The address at the head of the queue is available for use by a requesting node if it has never been used or if it has been inactive for a MAX-ADDRESS-LIFE time period.

MAX-ADDRESS-LIFE must be larger than ADDRESS-TIMEOUT to ensure that an address is not in use by any node when it becomes available for another node. If the root receives an ADDRESS request from a source for which an entry exists in the address queue, the root simply updates the queue and returns the old address.

The network layer organizes nodes into an optimal spanning tree with the controller at the root of the tree. (Note that the spanning three identifier allows two logical trees to exist in the same coverage area.) Spanning tree organization is facilitated with a HELLO protocol which allows nodes to determine the shortest path to the root before attaching to the spanning tree. All messages are routed along branches of the spanning tree.

Nodes in the network are generally categorized as ATTACHED or UNATTACHED. Initially, only the root node is attached. A single controller may be designated as the root, or multiple root candidates (i.e. controllers) may negotiate to determine which node is the root. Attached bridge nodes and root candidates transmit "HELLO" packets at calculated intervals. The HELLO packets include:

a) the source address, which includes the spanning tree ID).

b) a broadcast destination address.

c) a "seed" value from which the time schedule of future hello messages can be calculated.

d) a hello slot displacement time specifying an actual variation that will occur in the scheduled arrival of the very next hello message (the scheduled arrival being calculated from the "seed").

e) the distance (i.e., path cost) of the transmitter from the host. The incremental portion of the distance between a node and its parent is primarily a function of the type of physical link (i.e., ethernet, RS485, RF, or the like). If a signal-strength indicator is available, connections are biased toward the link with the best signal strength. The distance component is intended to bias path selection toward (i.e., wired) high-speed connections. Setting a minimum signal strength threshold helps prevent sporadic changes in the network. In addition, connections can be biased to balance the load (i.e., the number of children) on a parent node.

f) a pending message list. Pending message lists consist of 0 or more destination-address/message-length pairs. Pending messages for terminals are stored in the terminal's parent node.

g) a detached-node list. Detached-node lists contain the addresses of nodes which have detached from the spanning tree. The root maintains two lists. A private list consists of all detached node addresses, and an advertised list consists of the addresses of all detached nodes which have pending transport messages. The addresses in the hello packet are equivalent to the advertised list.

An internal node learns which entries should be in its list from hello messages transmitted by its parent node. The root node builds its detached-node lists from information received in DETACH packets. Entries are included in hello messages for DETACH-MSG-LIFE hello times.

Attached notes broadcast "SHORT HELLO" messages immediately if they receive an "HELLO.request" packet with a global destination address; otherwise, attached nodes will only broadcast hello messages at calculated time intervals in "hello slots." Short hello messages do not contain a pending-message or detached-node list. Short hello messages are sent independently of regular hello messages and do not affect regular hello timing.

Unattached nodes (nodes without a parent in the spanning tree) are, initially, in an "UNATTACHED LISTEN" state. During the listen state, a node learns which attached base station/controller is closest to the root node by listening to hello messages. After the listening period expires an unattached node sends an ATTACH.request packet to the attached node closest to the root. The attached node imme-

diately acknowledges the ATTACH.request, and send the ATTACH.request packet onto the root (controller) node. The root node returns the request as an end-to-end ATTACH-.confirm packet. If the newly-attached node is a base station, the node calculates its link distance and adds the distance to the distance of its parent before beginning to transmit hello messages.

The end-to-end ATTACH.request functions as a discovery packet, and enables the root node to learn the address of the source node quickly. The end-to-end ATTACH. request, when sent from a node to the root, does not always travel the entire distance. When a downstream node receives an ATTACH.request packet and already has a correct routing entry for the associated node, the downstream node intercepts the request and returns the ATTACH.confirm to the source node. (Note that any data piggy-backed on the ATTACH.request packet must still be forwarded to the host.) This situation occurs whenever a "new" path has more than one node in common with the "old" path.

The LISTEN state ends after MIN_HELLO hello time slots if hello messages have been received from at least one node. If no hello messages have been received the listening node waits and retries later.

An attached node may respond to a hello message from a node other than its parent (i.e., with an ATTACH.request) if the difference in the hop count specified in the hello packet exceeds a CHANGE-THRESHOLD level.

Unattached nodes may broadcast a GLOBAL ATTACH-.request with a multi-cast base station destination address to solicit short hello messages from attached base stations. The net effect is that the LISTEN state may (optionally) be shortened. (Note that only attached base station or the controller may respond to ATTACH. requests.) Normally, this facility is reserved for base stations with children and terminals with transactions in progress.

ATTACH. requests contain a (possibly empty) CHILD LIST, to enable internal nodes to update their routing tables. ATTACH.requests also contain a "count" field which indicates that a terminal may be SLEEPING. The network entity in the parent of a SLEEPING terminal con temporarily store messages for later delivery. If the count field is non-zero, the network entity in a parent node will store pending messages until 1) the message is delivered, or 2) "count" hello times have expired.

Transport layer data can be piggy-backed on an attached request packet from a terminal. (i.e., an attach request/confirm can be implemented with a bit flag in the network header of a data packet.)

Network Layer Routing

All messages are routed along branches of the spanning tree. Base stations "learn" the address of terminals by monitoring traffic from terminals (i.e., to the root). When a base station receives (i.e., an ATTACH.request) packet, destined for the root, the base station creates or updates an entry in its routing table for the terminal. The entry includes the terminal address, and the address of the base station which sent the packet (i.e., the hop address). When a base station receives an upstream packet (i.e., from the root, destined for a terminal) the packet is simply forwarded to the base station which is in the routing entry for the destination. Upstream messages (i.e., to a terminal) are discarded whenever a routing entry does not exist. Downstream messages (i.e., from a terminal to the root) are simply forwarded to the next downstream node (i.e., the parent in the branch of the spanning tree.

TERMINAL-TO-TERMINAL COMMUNICATIONS is accomplished by routing all terminal-to-terminal traffic through the nearest common ancestor. In the worst case, the root is the nearest common ancestor. A "ADDRESS SERVER" facilitates terminal-to-terminal communications (see below).

DELETING INVALID ROUTING TABLE ENTRIES is accomplished in several ways: connection oriented transport layer ensures that packets will arrive from nodes attached to the branch of the spanning tree within the timeout period, unless a node is disconnected.)

2) Whenever the DLC entity in a parent fails RETRY MAX times to send a message to a child node, the node is logically disconnected from the spanning tree, with one exception. If the child is a SLEEPING terminal, the message is retained by the network entity in the parent for "count" hello times. The parent immediately attempts to deliver the message after it sends its next hello packet. If, after "count" hello times, the message cannot be delivered, then the child is logically detached from the spanning tree. Detached node information is propagated downstream to the root node, each node in the path of the DETACH packet must adjust its routing tables appropriately according to the following rules: a) if the lost node is a child terminal node, the routing entry for the terminal is deleted and a DETACH packet is generated, b) if the node specified in DETACH packet is a terminal and the node which delivered the packet is the next hop in the path to the terminal, then the routing table entry for the terminal is deleted and the DETACH packet is forwarded, c) if the lost node is a child base station node then all routing entries which specify that base station as the next hop are deleted and a DETACH packet is generated for each lost terminal.

IN GENERAL, WHENEVER A NODE DISCOVERS THAT A TERMINAL IS DETACHED, IT PURGES ITS ROUTING ENTRY FOR THE TERMINAL. WHENEVER A NODE DISCOVERS THAT A BASE STATION IS DETACHED, IT PURGES ALL ROUTING ENTRIES CONTAINING THE BASE STATION. ONLY. ENTRIES FOR UPSTREAM NODES ARE DELETED.

When DETACH packets reach the root node, they are added to a "detached list." Nodes remain in the root node's detached list until a) the node reattaches to the spanning tree, or b) the list entry times out. The detached list is included in hello messages and is propagated throughout the spanning tree.

For example, if a terminal detaches and reattaches to a different branch in the spanning tree, all downstream nodes in the new branch (quickly) "learn" the new path to the terminal. Nodes which were also in the old path change their routing tables and no longer forward packets along the old path. At least one node, the root, must-be in both the old and new path. A new path is established as soon as an end-to-end attach request packet from the terminal reaches a node which was also in the old path.

4) A node (quickly) learns that it is detached whenever it receives a hello message, from any node, with its address in the associated detached list. The detached node can, optionally, send a global ATTACH.request, and then enters the UNATTACHED LISTEN state and reattaches as described above. After reattaching, the node must remain in a HOLD-DOWN state until its address is aged out of all detached lists. During the HOLD-DOWN state the node ignores detached lists.

5) A node becomes disconnected and enters the UNATTACHED LISTEN state whenever HELLO-RETRY-MAX hello messages are missed from its parent node.

6) A node enters the ATTACHED LISTEN state whenever a single hello message, from its parent, is missed. SLEEP-

ING terminals remain awake during the ATTACHED LISTEN state. The state ends when the terminal receives a data or hello message from its parent. The terminal becomes UNATTACHED when a) its address appears in the detached list of a hello message from an ode other than its parent, or b) HELLO-RETRY-MAX hello messages are missed. The total number of hello slots spend in the LISTEN state is constant.

If a node in the ATTACHED LISTEN state discovers a path to the root which is CHANGE-THRESHOLD shorter, it can attach to the shorter path. Periodically, SLEEPING terminals must enter the ATTACHED LEARN state to discovery any changes (i.e., shorter paths) in the network topology.

Hello Synchronization

All attached non-terminal nodes broadcast periodic "hello" messages in discrete "hello slots" at calculated intervals. Base station nodes learn which hello slots are busy and refrain from transmitting during busy hello slots.

A terminal refrains from transmitting during the hello slot of its parent node and refrains from transmitting during message slots reserved in a hello message.

The hello message contains a "seed" field used in a well-known randomization algorithm to determine the next hello slot for the transmitting node and the next seed. The address of the transmitting node is used as a factor in the algorithm to guarantee randomization. Nodes can execute the algorithm i times to determine the time (and seed) if the i-the hello message from the transmitter.

After attached, a base station chooses a random initial seed and a non-busy hello slot and broadcasts a hello message in that slot. The base station chooses succeeding hello slots by executing the randomization algorithm. If an execution of the algorithm chooses a busy slot, the next free slot is used and a hello "displacement" field indicates the offset from a calculated slot. Cumulative delays are not allowed (i.e., contention delays during the i hello transmission do not effect the time of the i+1 hello transmission).

HELLO-TIME and HELLO-SLOT-TIME values are set by the root node and flooded throughout the network in hello messages. The HELLO-SLOT-TIME value must be large enough to minimize hello contention.

A node initially synchronizes on a hello message from its parent. A SLEEPING node can power-down with an active timer interrupt to wake it just before the next expected hello message. The network entity in base station nodes can store messages for SLEEPING nodes and transmit them immediately following the hello messages. This implementation enables SLEEPING terminals to receive unsolicited messages. (Note that the network layer always tries to deliver messages immediately, before storing them.) Retries for pending messages are transmitted in a round-robin order when messages are pending for more than one destination.

Note that a child node that misses i hello messages, can calculate the time of the i+1 hello message.

Transport Layer Theory and Implementation Notes

The transport layer provides reliable, unreliable, and transaction-oriented services. Two types of transport connections are defined: 1) a TCP-like transport connection may be explicitly requested for long-lived connections or 2) a VMTP-like connection-record may be implicitly set up for transient connections. In addition, a connectionless service is provided for nodes which support an end-to-end transport connection with the host computer.

The interfaces to the next upper (i.e., application) layer include:

CONNECT (access_point, node_name)

LISTEN (access_point)

UNITDATA (access_point, node_name, buffer, length)

SEND (handle, buffer, length)

RECEIVE (handle, buffer, length)

CLOSE (handle)

The "handle" designates the connection type, and is the connection identifier for TCP-like connections.

SEND messages require a response from the network node (root or terminal) to which the message is directed.

UNITDATA messages do not require a response. UNITDATA is used to send messages to a host which is capable of supporting end-to-end host-to-terminal transport connections.

Because the network layer provides an unreliable service, the transport layer is required to detect duplicate packets and retransmit lost packets. Detecting duplicates is facilitated by numbering transport packets with unambiguous sequence numbers.

Transport Connections

TCP-like transport connections are used for message transmission over long-lived connections. The connections may be terminal-to-root or terminal-to-terminal (i.e., base stations are not involved in the transport connection).

TCP-like transport connections are established using a 3-way handshake. Each end selects its initial sequence number and acknowledges the other end's initial sequence number during the handshake. The node which initiates the connection must wait a MAX-PACKET-LIFE time, before requesting a connection, to guarantee that initial sequence numbers are unambiguous. Sequence numbers are incremented modulo MAX-SEQ, where MAX-SEQ is large enough to insure that duplicate sequence numbers do not exist in the network. Packet types for establishing and breaking connections are defined as in TCP.

A TCP-like connection is full-duplex and a sliding window is used to allow multiple outstanding transport packets. An ARQ bit in the transport header is used to require an immediate acknowledgment from the opposite end.

VMTP-like connections are used for transient messages (i.e. terminal-to-terminal mail messages). VMTP-like connection records are built automatically. A VMTP-like connection record is built (or updated) whenever a VMTP-like transport message is received. The advantage is that an-explicit connection request is not required. The disadvantage is that longer and more carefully selected sequence numbers are required. A VMTP-like connection is half-duplex. (A full-duplex connection at a higher layer can be built with two independent half-duplex VMTP-like connections.) Acknowledgments must be handled by higher layers.

Transport connections are defined by the network end-to-end destination and source addresses.

A MAX_TP_LIFE timeout is associated with transport connections. Transport connection records are purged after a MAX_TP_LIFE time expires without activity on the connection. The transport entity in a terminal can ensure that its transport connection will not be lost by transmitting an empty time-fill transport packet whenever TP_TIMEOUT time expires without activity.

The transport entity in a node stores messages for possible retransmission. Note that retransmissions may not always follow the same path (primarily) due to moving terminals and the resulting changes in the spanning tree. For example, the network entity in a parent node may disconnect a child after the DLC entity reports a message delivery failure. The

child will soon discover that it is detached and will reattach to the spanning tree. Now when the transport entity (i.e. in the root) re-sends the message, it will follow the new path.

Transport Message Timing and Sleeping Terminals

The transport entity in a terminal calculates a separate timeout for SEND and TRANSACTION operations. Initially, both timeouts are a function of the distance of the terminal from the root node.

A TCP-like algorithm is used to estimate the expected propagation delay for each message type. Messages, which require a response, are retransmitted if twice the expected propagation time expires before a response is received. SLEEPING terminals can power down for a large percentage of the expected propagation delay before waking up to receive the response message. Note that missed messages may be stored by the network layer for "count" hello times.

Medium Access Control (MAC) Theory and Implementation Notes

Access to the network communications channel is regulated in several ways: executing the full CSMA algorithm (see MAC layer above). The sender retransmits unacknowledged messages until a RETRY_MAX count is exhausted.

The retry time of the DLC must be relatively short so that lost nodes can be detected quickly. When the DLC layer reports a failure to deliver a message to the network layer, the network layer can 1) save messages for SLEEPING terminals for later attempts, or 2) DETACH the node from the spanning tree. Note that most lost nodes are due to moving terminals.

The node identifier part of the DLC address is initially all 0's for all nodes except the root node. The all 0's address is used by a node to send and received data-link frames until a unique node identifier is passed to the DLC entity in the node. (The unique node identifier is obtained by the network entity.)

Address Resolution

Well-known names too are bound to network addresses in several ways:

- The network address and TRANSPORT ACCESS ID of a name server, contained in the root, is well-known by all nodes.
- A node can register a well-known name with the name server contained in the root node.
- A node can request the network access address of another application from the name server by using the well-known name of the application.

Possible Extensions

Base station-to-base station traffic could also be routed through the controller if the backward learning algorithm included base station nodes. (Each base station would simply have to remember which direction on its branch of the spanning tree to send data directed toward another base station.)

The possibility of multiple controllers is kept open by including a spanning-tree identifier in address fields. Each controller defines a unique spanning tree. A node can be in more than one spanning tree, with separate network state variables defined for each.

Thus, the preferred embodiment of the present invention describes an apparatus and a method of efficiently routing data through a network of intermediate base stations in a radio data communication system.

In alternate embodiments of the present invention, the RF Networks contain multiple gateways. By including a system identifier in the address field of the nodes, it is possible to determine which nodes are connected to which networks.

Multipath Fading

In a preferred embodiment, the data to be sent through the RF communication link is segmented into a plurality of DATA packets and is then transmitted. Upon receipt, the DATA packets are reassembled for use or storage. Data segmentation of the RF link provides better communication channel efficiency by reducing the amount of data loss in the network. For example, because collisions between transmissions on an RF link cannot be completely avoided, sending the data in small segments results in an overall decrease in data loss in the network, i.e., only the small segments which collide have to be re-sent.

Similarly, choosing smaller data packets for transmission also reduces the amount of data loss by reducing the inherent effects of perturbations and fluctuations found in RF communication links. In particular, RF signals are inherently subject to what is termed "multi-path fading." A signal received by a receiver is a composite of all signals that have reached that receiver by taking all available paths from the transmitter. The received signal is therefore often referred to as a "composite signal" which has a power envelope equal to the vector sum of the individual components of the multi-path signals received. If the signals making up the composite signal are of amplitudes that add "out of phase", the desired data signal decreases in amplitude. If the signal amplitudes are approximately equal, an effective null (no detectable signal at the receiver) results. This condition is termed "fading".

Normally changes in the propagation environment occur relatively slowly, i.e., over periods of time ranging from several tenths (1/10's) of seconds to several seconds. However, in a mobile RF environment, receivers (or the corresponding transmitters) often travel over some distance in the course of receiving a message. Because the signal energy at each receiver is determined by the paths that the signal components take to reach that receiver, the relative motion between the receiver and the transmitter causes the receiver to experience rapid fluctuations in signal energy. Such rapid fluctuations can cause fading and result in the loss of data if the amplitude of the received signal falls below the sensitivity of the receiver.

Over small distances, the signal components that determine the composite signal are well correlated, i.e., there is a small probability that a significant change in the signal power envelope will occur over the distance. If a transmission of a data packet can be initiated and completed before the relative movement between the receiver and transmitter exceeds the "small distance", data loss to fading is unlikely to occur. The maximum "small distance" wherein a high degree of correlation exists is referred to hereafter as the "correlation distance".

As expressed in wavelengths of the carrier frequency, the correlation distance is one half (½) of the wavelength, while a more conservative value is one quarter (¼) of the wavelength. Taking this correlation distance into consideration, the size of the data packet for segmentation purposes can be calculated. For example, at 915 MHz (a preferred RF transmission frequency), a quarter wavelength is about 8.2 centimeters. A mobile radio moving at ten (10) miles per hour, or 447 centimeters per second, travels the quarter wavelength in about 18.3 milliseconds. In such an environment, as long as the segment packet size remains under 18.3 milliseconds, fading does not pose any problems. In a preferred embodiment, five (5) millisecond data packet segments are chosen which provides a quasi-static multipath communication environment.

Duty Cycle

In a preferred embodiment, each base station broadcasts HELLO messages about every two (2) seconds. If upon

power up, two base stations choose to broadcast at the exact same broadcast, collisions between HELLO messages would occur and continue to occur in a lock-step fashion upon each broadcast. To prevent such an occurrence, each base station chooses a pseudo-random offset from the 2 second base time between HELLO messages to actually broadcast the HELLO message. For example, instead of beginning each HELLO message broadcast at exactly 2 seconds after the last, the base station might pseudo-randomly offset the 2 seconds by a negative (−) value of 0.2, yielding a broadcast at 1.8 seconds. Because every base station generates a different pseudo-random offset generation, the problem of lock-stepping collisions is avoided.

Additionally, instead of using a true randomization, a pseudo-random offset is used which bases all pseudo-random offset calculations on a seed value (the "seed"). The "seed" is broadcast in each HELLO message so that the timing of the next HELLO message may be calculated by any listening mobile terminal. The use of the seed, and pseudo random offset generation, allows the terminal to "sleep" (enter an energy and CPU saving mode) between HELLO messages and be able to "wake up" (dedicate energy and CPU concentration on RF reception) and stay awake for the minimal time needed to receive the next HELLO message. The relationship between the time that a base station must remain awake to the time it may sleep is called the "duty cycle".

Using a 2 second HELLO to HELLO message timing with a pseudo-random offset range of +/− ⅓ of a second, the preferred embodiment has achieved a very low duty cycle. Further details of this timing can be found in the Bridge Layer Specification in Appendix E.

In addition, Appendix A provides a list of the program modules which are found in microfiche Appendix B. These modules comprise an exemplary computer program listing of the source code ("C" programming language) used by the network controllers and intelligent base transceivers of the present invention. Note that the term "AMX" found in Appendices A and B refers to the operating system software used. "AMX" is a multi-tasking operating system from KADAK Products, Ltd., Vancouver, B.C., Canada. Appendix C, D, E, F, and G provide system specifications for the SST Network Architecture, SST Network Frame Format, Bridging Layer, MAC Layer, and Physical Layer of one embodiment of the present invention.

As is evident from the description that is provided above, the implementation of the present invention can vary greatly depending upon the desired goal of the user. However, the scope of the present invention is intended to cover all variations and substitutions which are and which may become apparent from the illustrative embodiment of the present invention that is provided above, and the scope of the invention should be extended to the claimed invention and its equivalents.

What is claimed is:

1. A communication network supporting wireless communication of messages, said communication network comprising:

a first terminal node having a wireless receiver operable in a normal state;

a second terminal node having a wireless receiver operable in a power saving state;

an access point that attempts to immediately deliver messages destined for the first terminal node;

the access point attempts to deliver messages destined for the second terminal node by transmitting at predetermined intervals beacons that identify that a message awaits delivery;

the second terminal node synchronizes operation of its wireless receiver to receive the beacons from the access point; and

the second terminal node determines from the received beacons that it has a message awaiting delivery and directs further operation of its wireless receiver to receive the message.

2. The communication network of claim **1** wherein the first terminal node selectively operates in one of the normal mode and a power saving state and while operating in the power saving state the first terminal node synchronizes operation of its wireless receiver to receive the beacons from the access point.

3. The communication network of claim **1** wherein the second terminal node directs further operation of its receiver to receive the message during a time period that follows one of the received beacons.

4. The communication network of claim **3** wherein the time period immediately follows the one of the received beacons.

5. The communication network of claim **3** wherein the time period follows the one of the received beacons during an awake time window.

6. The communication network of claim **5** wherein the awake time window occurs an offset time following the one of the received beacons.

7. The communication network of claim **3** wherein the second terminal node has a wireless transmitter that is used to request the message awaiting delivery.

8. The communication network of claim **5** wherein the second terminal node has a wireless transmitter that is used to request that the message awaiting delivery be delivered during the awake time window.

9. The communication network of claim **6** wherein the second terminal node has a wireless transmitter that is used to request that the message awaiting delivery be delivered during the awake time window at the offset time, wherein the awake time window and the offset time are communicated with the request.

10. The communication network of claim **1** wherein the second terminal node communicates to the access point an indication of whether the second terminal node operates in the power saving state.

11. The communication network of claim **3** wherein the access point queues the messages awaiting delivery, and removes from the queue those of the messages awaiting delivery where delivery is unsuccessful.

12. The communication network of claim **11** wherein the messages awaiting delivery remain in the queue until delivery is successful or until a predetermined number of the beacons occur wherein delivery is unsuccessful.

13. The communication network of claim **3** wherein the second terminal node synchronizes operation of its wireless receiver to receive the beacons from the access point even when one or more of the beacons from the access point have not been received.

14. The communication network of claim **1** wherein the second terminal node comprises a battery-powered, roaming device.

15. The communication network of claim **14** wherein the access point participates in spanning tree routing to support the battery-powered, roaming device.

16. A communication network supporting wireless communication of messages, said communication network comprising:

a first terminal node operating in a first state;

a second terminal node operating in a second state in which attempts are made to minimize power consumption by the wireless receiver

a bridging node having a wireless transceiver to support wireless communication to the first and second terminal nodes;

the bridging node attempts to deliver messages destined for the second terminal node by transmitting at predetermined intervals beacons that identify a message awaiting delivery;

the second terminal node synchronizing operation of its wireless receiver to receive the beacons from the bridging node and determining from the received beacons that it has a message awaiting delivery and responding to an awaiting message by directing further operation of its wireless receiver to receive the message; and

the bridging node delivering messages to the first terminal node without requiring the first terminal node to determine from the beacons that it has messages awaiting delivery.

17. The communication network of claim **16** wherein the second terminal node directs further operation of its receiver to receive the message during a time period that follows one of the received beacons.

18. The communication network of claim **17** wherein the time period immediately follows the one of the received beacons.

19. The communication network of claim **17** wherein the time period follows the one of the received beacons during an awake time window.

20. A communication network supporting wireless communication of messages, said communication network comprising:

a first node having a wireless transceiver;

a second node having a wireless transceiver;

said first node wirelessly transmitting at periodic intervals to accommodate delivery of messages from said first node to said second node; and

said second node selectively either entering and remaining in a low power state between the transmissions at periodic intervals or entering and remaining in a low power state between any two of the transmissions at periodic intervals that are nonconsecutive.

21. The communication network of claim **20** wherein at least one of the first node and the second node comprising a roaming terminal.

22. The communication network of claim **21** wherein the second node directs further operation of its transceiver to receive messages during a time period that follows one of the wireless transmissions from the first node.

23. The communication network of claim **22** wherein the time period immediately follows the one of the wireless transmissions from the first node.

24. The communication network of claim **22** wherein the time period follows the one of the wireless transmissions from the first node during an awake time window.

25. The communication network of claim **24** wherein the awake time window occurs an offset time following the one of the wireless transmissions from the first node.

26. A communication network supporting wireless communication of messages, said communication network comprising:

a first node having a wireless transceiver;

a second node having a wireless receiver;

said first node wirelessly transmitting at timed intervals to accommodate delivery of messages from said first node to said second node; and

said second node synchronizing with the timed intervals to selectively enter and remain in a low power state either one of between consecutive transmissions at periodic intervals and between nonconsecutive transmissions at periodic intervals.

27. The communication network of claim **26** wherein at least one of the first node and the second node comprising a roaming terminal.

28. The communication network of claim **27** wherein the second node directs further operation of its transceiver to receive messages during a time period that follows one of the wireless transmissions from the first node.

29. The communication network of claim **28** wherein the time period immediately follows the one of the wireless transmissions from the first node.

30. The communication network of claim **28** wherein the time period follows the one of the wireless transmissions from the first node during an awake time window.

31. The communication network of claim **30** wherein the awake time window occurs an offset time following the one of the wireless transmissions from the first node.

* * * * *

UNITED STATES PATENT AND TRADEMARK OFFICE

CERTIFICATE OF CORRECTION

PATENT NO. : 6,374,311 B1
DATED : April 16, 2002
INVENTOR(S) : Ronald L. Mahany, Robert C. Meier and Ronald E. Luse

It is certified that error appears in the above-identified patent and that said Letters Patent is hereby corrected as shown below:

Title page,
Item [63], delete "Continuation-in-part" and substitute:
-- Continuation of application No. 08/395,555, filed on Feb. 28, 1995, now Pat. 5,740,366, which is a continuation of application No. 08/255,848, filed on Jun. 8, 1994, now Pat. 5,394,436, which is a continuation of application No. 07/970,411, filed on Nov. 2, 1992, now abandoned, which is a continuation-in-part of application No. 07/968,990, filed on Oct. 30,1992, now abandoned, which is a continuation-in-part of application No. 07/769,425, filed on Oct. 1, 1991, and a continuation-in-part of application No. PCT/US92/08610, filed on Oct. 1, 1992; the entire disclosures of each of these applications including the drawings and appendices being incorporated herein. The present application is a continuation-in-part --

Column 1,
Line 8, before "The" insert the following paragraph:
-- The present case is a continuation of U.S. application Ser. No. 08/395,555 filed Feb. 28, 1995, which is a continuation of U.S. application Ser. No. 08/255,848, filed Jun. 8, 1994 by Meier et al. (Attorney Docket Nos. 10523US01 and DN37882YC), which is a continuation of U.S. application Ser. No. 07/970,411, filed Nov. 2, 1992 by Meier et al. (Attorney Docket Nos. 92P767 and DN37882YB), which is a continuation-in-part of U.S. application Ser. No. 07/968,990, filed Oct. 30, 1992 (Attorney Docket Nos. 92P758 and DN37882YA), which is itself a continuation-in-part of a pending application of Meier et al., U.S. application Ser. No. 07/769,425, filed Oct. 1, 1991 (Attorney Docket Nos. 91P668 and DN37882); the pending application U.S. application Ser. No. 08/968,990 is also a continuation-in-part of pending PCT application of Mahany et al., Ser. No. PCT/US92/08610, filed Oct. 1, 1992 (Attorney Docket Nos. 92P661 and DN37882Y); the entire disclosures of each of these applications including

UNITED STATES PATENT AND TRADEMARK OFFICE

CERTIFICATE OF CORRECTION

PATENT NO. : 6,374,311 B1
DATED : April 16, 2002
INVENTOR(S) : Ronald L. Mahany, Robert C. Meier and Ronald E. Luse

It is certified that error appears in the above-identified patent and that said Letters Patent is hereby corrected as shown below:

Column 1, cont'd,
the drawings and appendices being incorporated herein. --

Signed and Sealed this

Twenty-second Day of October, 2002

Attest:

JAMES E. ROGAN
Director of the United States Patent and Trademark Office

Attesting Officer

US006374311C1

(12) EX PARTE REEXAMINATION CERTIFICATE (6904th)

United States Patent

Mahany et al.

(10) Number: US 6,374,311 C1

(45) Certificate Issued: *Jun. 30, 2009

(54) **COMMUNICATION NETWORK HAVING A PLURALITY OF BRIDGING NODES WHICH TRANSMIT A BEACON TO TERMINAL NODES IN POWER SAVING STATE THAT IT HAS MESSAGES AWAITING DELIVERY**

(75) Inventors: **Ronald L. Mahany**, Cedar Rapids, IA (US); **Robert C. Meier**, Cedar Rapids, IA (US); **Ronald E. Luse**, Marion, IA (US)

(73) Assignee: **Broadcom Corporation**, Irvine, CA (US)

Reexamination Request:
No. 90/008,136, Aug. 1, 2006

Reexamination Certificate for:

Patent No.:	**6,374,311**
Issued:	**Apr. 16, 2002**
Appl. No.:	**09/060,287**
Filed:	**Apr. 14, 1998**

(*) Notice: This patent is subject to a terminal disclaimer.

Certificate of Correction issued Oct. 22, 2002.

Related U.S. Application Data

(63) Continuation of application No. 08/545,108, filed on Oct. 19, 1995, now Pat. No. 5,940,771, which is a continuation of application No. 07/947,102, filed on Sep. 14, 1992, now abandoned, which is a continuation-in-part of application No. 07/907,927, filed on Jun. 30, 1992, now abandoned, which is a continuation-in-part of application No. 09/060,287, which is a continuation-in-part of application No. 07/857,603, filed as application No. PCT/US92/03982 on May 13, 1992, now abandoned, which is a continuation-in-part of application No. 07/907,927, which is a continuation-in-part of application No. 07/802,348, filed on Dec. 4, 1991, now abandoned, which is a continuation of application No. 07/790,946, filed on Nov. 12, 1991, now abandoned.

(51) **Int. Cl.**

G08C 17/00	(2006.01)
G08C 17/02	(2006.01)
H01Q 1/00	(2006.01)
H04L 12/12	(2006.01)
H04L 12/56	(2006.01)

(52) **U.S. Cl.** **710/18**; 370/329; 370/351; 375/132; 375/220; 455/517; 455/524; 455/343.2; 709/227; 710/46; 713/320; 713/321; 713/323; 713/324

(58) **Field of Classification Search** ..... None
See application file for complete search history.

(56) **References Cited**

U.S. PATENT DOCUMENTS

4,449,248 A 5/1984 Leslie et al.

(Continued)

FOREIGN PATENT DOCUMENTS

GB 2250892 6/1992

(Continued)

OTHER PUBLICATIONS

Decision of Appeal 2007–1164 in the United States Court of Appeals for the Federal Circuit, *Broadcom Corporation* v. *International Trade Commission and Qualcomm Incorporated,* On appeal from the United States International Trade Commission in Investigation No. 337–TA–543, Decided Sep. 19, 2008.

(Continued)

Primary Examiner—Charles Craver

(57) **ABSTRACT**

An apparatus and a method for routing data in a radio data communication system having one or more host computers, one or more intermediate base stations, and one or more RF terminals organizes the intermediate base stations into an optimal spanning-tree network to control the routing of data to and from the RF terminals and the host computer efficiently and dynamically. Communication between the host computer and the RF terminals is achieved by using the network of intermediate base stations to transmit the data.

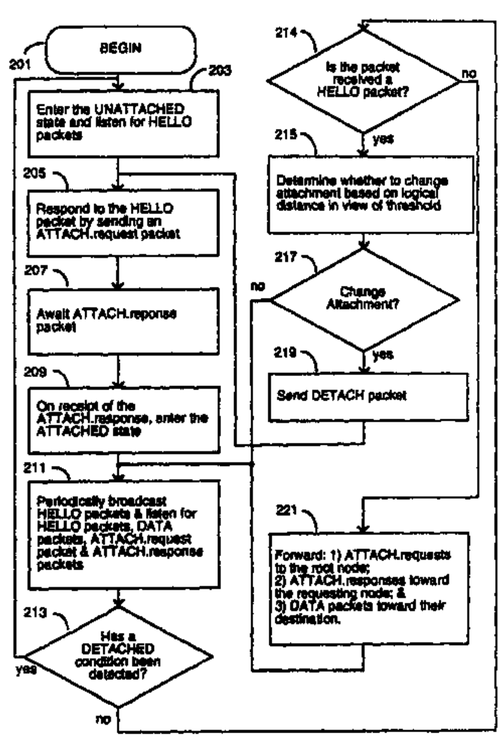

U.S. PATENT DOCUMENTS

4,734,694	A	3/1988	Umetsu et al.
4,745,408	A	5/1988	Nagata et al.
4,799,253	A	1/1989	Stern et al.
4,903,319	A	2/1990	Kasai et al.
4,964,121	A	10/1990	Moore
4,977,611	A	12/1990	Maru
4,989,230	A	1/1991	Gillig
5,027,428	A	6/1991	Ishiguro et al.
5,058,023	A	10/1991	Kozikaro
5,058,203	A	10/1991	Inagami
5,093,926	A	3/1992	Sasuta
5,117,449	A	5/1992	Metroka
5,128,938	A	7/1992	Borras
5,142,279	A	8/1992	Jasinski et al.
5,142,534	A	8/1992	Simpson et al.
5,146,214	A	9/1992	Yamada et al.
5,150,361	A	9/1992	Wieczorek et al.
5,203,020	A	4/1993	Sato et al.
5,224,150	A	6/1993	Neustein
5,224,152	A	6/1993	Harte
5,241,542	A	8/1993	Natarajan et al.
5,252,963	A	10/1993	Snowden et al.
5,257,019	A	10/1993	Schwendeman et al.
5,260,988	A	11/1993	Schellinger et al.
5,274,666	A	12/1993	Dowdell et al.
5,275,254	A	1/1994	Shiraishi et al.
5,285,208	A	2/1994	Bertiger
5,301,225	A	4/1994	Suzuki et al.
5,329,531	A	7/1994	Diepstraten et al.
5,329,576	A	7/1994	Handforth
5,343,512	A	8/1994	Wang
5,361,397	A	11/1994	Wright
5,371,734	A	12/1994	Fischer
5,371,898	A	12/1994	Grube et al.
5,375,254	A	12/1994	Owen
5,377,192	A	12/1994	Goodings et al.
5,420,911	A	5/1995	Dahlin et al.
5,533,097	A	7/1996	Crane
5,550,895	A	8/1996	Burson
5,590,346	A	12/1996	West et al.
5,649,308	A	7/1997	Andrews
5,680,311	A	10/1997	Trsar et al.
5,696,468	A	12/1997	Nise
5,712,868	A	1/1998	Stern
5,745,523	A	4/1998	Dent et al.
5,757,239	A	5/1998	Gilmore
5,825,253	A	10/1998	Mathe et al.
5,910,752	A	6/1999	Filipovic et al.
6,348,841	B1	2/2002	See
6,359,872	B1	3/2002	Mahany et al.
6,374,311	B1	4/2002	Mahany et al.
6,522,871	B1	2/2003	Patrick et al.
6,583,675	B2	6/2003	Gomez
6,593,826	B2	7/2003	See
6,694,129	B2	2/2004	Peterzell et al.
6,714,983	B1	3/2004	Koenck et al.
6,731,146	B1	5/2004	Gallardo
6,764,983	B1	7/2004	Hammond et al.
6,819,197	B2	11/2004	Maldonado
6,823,033	B2	11/2004	Fahim
6,888,913	B2	5/2005	Walker
6,911,856	B2	6/2005	Florescu
6,928,275	B1	8/2005	Patrick et al.
6,937,872	B2	8/2005	Krasner

FOREIGN PATENT DOCUMENTS

JP	61-174743	8/1986
JP	62-37008	8/1994
WO	WO 92/02084	2/1992

OTHER PUBLICATIONS

Mobitex Operators Association, "Mobitex Terminal Specification To Be Used With Cantel Mobitex Radio Network Issue R1A 8000 bps," Feb. 26, 1990.

Mobitex Operators Association, "Addendum Battery–Saving Protocol for Portable Terminals, " Aug. 17, 1990.

Respondent Qualcomm Incorporated's Notice Of Prior Art, with Exhibits A & D attached thereto, Nov. 15, 2005.

Qualcomm's Response To Interrogatory 3–6, with Exhibits B & C attached thereto—need date of document, Aug. 16, 2005.

"Cellular System Dual–Mode Mobile Station—Base Station Compatibility Standard," EIA/TIA Interim Standard, IS–54, May 1990.

"Change Request 05.02–11," Recommendation GSM 05.02, v. 3.3.0, Jun. 22, 1989.

"Change Request 05.02–14," Recommendation GSM 05.02, v. 3.3.0, Nov. 28, 1989.

"Covering Note To Draft Rec. GSM 01.04 Version 2.00.01—Vocabulary In A GSM PLMN," GSM 01.04 v. 2.00.01, Sep. 28, 1990.

"Discontinuous Reception (DRX) in the GSM System," Recommendation GSM 03.13, v 3.0.2, Jan. 15, 1990.

"European Digital Cellular Telecommunications System (Phase 1), Network Functions," GSM 03.01, v 3.1.1, Feb. 1992.

"European Digital Cellular Telecommunications System (Phase 2), Discontinuous Reception (DRX) In The GSM System," GSM 03.13, v. 4.0.1, Jul. 1, 1993.

"European Digital Cellular Telecommunications System (Phase 2), Functions Related To MS In Idle Mode," GSM 03.22, Version 4.4.0, Jun. 25, 1993.

"European Digital Cellular Telecommunications System (Phase 2), Mobile Stations (MS) Features," GSM 02.07, Oct. 1993.

"European Digital Cellular Telecommunications System (Phase 2), Mobile Stations Features," GSM 02.07, v. 4.4.1, Jun. 7, 1993.

"Man–Machine Interface Of The Mobile Station," Recommendation GSM 02.30, v 3.5.0, Mar. 1990.

"Mobile Station Features," Recommendation GSM 02.07, v 3.4.0, Jan. 1991.

"Mobile Station Features," Recommendation GSM 02.07, v. 3.3.0, Mar. 1990.

"Mobile Station Features," Recommendation GSM 02.07, v. 3.4.1, Feb. 1992.

"Mobile Station Features," Recommendation GSM 02.07, v. 3.4.1, Mar. 1991.

"MS–BSS Interface Date Link Layer Specification," Recommendation GSM 04.06, v. 3.6.0, 1992.

"Multiplexing And Multiple Access On The Radio Path," GSM Recommendation 05.02, v. 3.4.1, Jan. 1990.

"Outline Of Idle Mode Tasks, GSM Recommendation," 03.22, v. 1.0.1, May 23, 1991.

"Physical Layer On The Radio Path: General Description," Change Request 05.02–2, Recommendation GSM 05.01, v. 3.3.0, Nov. 17, 1989.

"Physical Layer On The Radio Path: General Description," GSM 05.01, v. 3.2.0, May 1988.

"Programme Management Review, GSM Action Plan, Review 18" ETSI/GSM 23, Jun. 5, 1989.

"Proposed EIA/TIA Interim Standard, Wideband Spread Spectrum Digital System Dual–Mode Mobile Station—Base Station Compatibility Standard," EIA/TIA/IS–95, Apr. 21, 1992.
"Security Related Network Functions," Recommendation GSM 3.20, v. 3.3.2, Jan. 1991.
"SIM, Functional Characteristics," Recommendation GSM 02.17, v. 3.2.0, Mar. 1990.
Berntson, "Mobitex—A New Network For Mobile Data Communications," Ericsson Review, vol. 66, Issue 1, p. 33, 1989, Bates Nos. QBB151463–151469.
Change Request to Specification GSM 02.11 Service Accessibility GSM 02.11, v 4.4.0, Feb. 11, 1993.
GSM Program Management Information, GSM 87/88, Apr. 22, 1988.
Laval et al., "Cognito Network Overview," Cognito Group Limited, Sep. 19, 1990.
"Mobile Radio Interface Layer 3 Specification," Recommendation GSM 04.08, v. 3.3.1, Apr. 1989.
"Subscriber Identity Modules, Functional Characteristics," Recommendation GSM 02.17, v. 3.2.0, Mar. 1990.
"Man–Machine Interface Of The Mobile Station," GSM 02.30 v. 3.9.0, Feb. 1992, QBB155113–155137.
"Mobile Station Features," Recommendation GSM 4.4.2, Oct. 1993.
"Random Access Procedures," GSM 04.06, v. 3.6.0, 1992.
Release Note, Recommendation GSM 03.20, Security Related Network Functions, v. 3.3.2, Jan. 1991.
Release Note, Recommendation, Mobile Station Features, GSM 02.07, v. 3.3.0, Mar. 1990.
Release Note, Recommendation, Man–Machine Interface of The Mobile Station, GSM 02.30, v. 3.5.0, Mar. 1990.
Broadcom's Third Supplemental Objections and Responses To Qualcomm's First Set Of Interrogatories (1–53), Dec. 29, 2005.
Change Request (Phase 2) Nos. 17, Tdoc GSM 195/93, Feb. 1992, Bates Nos. QBB222315–319.
General on Terminal Adaptation Functions For The MSs, GSM 07.01 v 3.14.0, Apr. 1, 1992.
GSM PLMN Connection Types, GSM 03.10 v 3.3.0, Feb. 1992.
Haine, "A New Radio Access Protocol And Network Architecture For Mobile Packet Data," Proc. Of Vehicular Technology Conference, pp. 1–15, May 19–22, 1991.
Mobile Radio Interface Layer 3 Specification, GSM 04.08 v 4.2.0, Oct. 1992, Bates Nos. QBB479485–977.
MS–BSS Interface—General Aspects And Principles, GSM 04.01 v 3.0.01, Feb. 1992, Bates Nos. QBB155196–155206.
Network Functions, GSM 03.01 v 3.0.0, Feb. 1992, Bates Nos. QBB155138–155152.
Notice Regarding Issuance Of Initial Determination And Recommended Determination On Remedy And Bond, Oct. 10, 2006.
Service Accessibility—Change Request, GSM 02.11 v 3.6.0, Jan. 14, 1992.
Service Accessibility—Change Request, GSM 02.11 v 4.0, Feb. 6, 1992.
Service Accessibility—GSM 02.11 v 4.3.0, Oct. 1992.
Service Accessibility—GSM 02.11 v 4.5.0, Apr. 1993, Bates Nos. QBB153507–515.
Service Accessibility, ETSI TS 122 011 v 6.4.0, Jun. 2004.
Speech Processing Functions: General Description, GSM 06.01 v 3.0.0, Feb. 1992.
Technical Realization Of The Short Message Service—Point–to–Point, GSM 03.40 v. 3.5.0, Feb. 1992.
Types Of Mobile Stations, GSM 02.06 v 3.2.0, Feb. 1992.
Posthearing Brief Of The Commission Investigative Staff, United States International Trade Commission, Apr. 3, 2006.
Rebuttal Expert Report Of Ray Nettleton Regarding Validity Of U.S. Patent Nos. 6,714,983 and 6,374,311 (redacted version), Dec. 15, 2005.
Invalidity Expert Report Of Dr. John Proakis (redacted version), Dec. 5, 2005.
GSM 07.01 v 3.13.0, updated version, Apr. 1992.
Qualcomm Incorporated's Sixth Supplemental Objections And Responses To Complaint's First Set Of Interrogatories (Nos. 1–15), Dec. 9, 2005.
Second Supplemental Expert Report Of Dr. John Proakis (redacted version), Feb. 9, 2006.
"A New Chapter In Wireless Communication And Email," Electronic Messaging News, vol. 3, No. 24. Nov. 27, 1991.
"AMDC Extends RFP Deadline To Mar. 10; Waiver Decision Expected At FCC's March Meeting," Industrial Communications, No. 7, Feb. 17, 1989.
"AMDC Picks Ericsson Gear," Communications Week, vol. 252, p. 44, Jun. 12, 1989.
"An Effective Prioritization Scheme For Handovers In Cellular Networks," IEEE–ICUPC '92 Proceedings, pp. 364–368, Sep. 29, 1992–Oct. 2, 1992.
"Ardis Links With NCR Notepad Dec. 11, 1991," Newsbytes, Dec. 11, 1991.
"Ardis To Face Competition From RAM," Newsbytes, Feb. 5, 1991.
"Automation In Warehousing," Proceedings Of The 8th International Conference, Tokyo, Japan, pp. 1–355, Oct. 6, 2008–Aug. 1987.
"Autonomous Radio Stations Possible Over Mobitex," Industrial Communications, No. 48, Dec. 9, 1988.
"Bean Bullish On Growth Of Mobile Data In New Future," Industrial Communications, No. 7, p. 8, Feb. 15, 1991.
"Bellsouth Buys Into Ram's Nationwide Mobile Data Network," Industrial Communications, No. 42, Oct. 18, 1991.
"BellSouth Has Option To Buy RAM Oct. 11, 1991," Newsbytes, Oct. 11, 1991.
"BellSouth RAM In Joint Venture," BOC Week, vol. 8, No. 40, p. 12, Oct. 21, 1991.
"BellSouth, RAM To Form Mobile Communications Joint Venture," PR Newswire, p. 1, Oct. 10, 1991.
Briefing Document For The Design Of The Diplema Messager MMI, Mar. 1989.
"Broadband Lan Technology," 1988.
"BT Opens New Service Center," Communications Week, p. 25, Nov. 11, 1991.
"Business Plan Appendix IV—Financial Projections", Nov. 1, 1990.
"C Business Plan" Cognito Group Limited, Nov. 1, 1990.
"C Business Plan" Cognito Group Limited, Apr. 1990.
"Canadian Cellular Industry (the)—Industry Report," First Marathon Securities Ltd. Industry Report, Investext Report No. 1154903, p. 30, Oct. 25, 1991.
"Cantel To Launch Mobile—Data And Paging Networks," The Gazette, Montreal Quebec, p. D1, May 10, 1989.
"Cellular System Mobile Station—Land Station Compatibility Specification," Office Of Science Technology Bulletin No. 53, Jul. 1983.

"Coded First To Jump On Mobitex Equipment Bandwagon; Sees Data Licenses As Worth As Much As Cellular," Industrial Communications, No. 22, Jun. 9, 1989.
"Communications Personals," Communications Daily, vol. 11, No. 28, Feb. 11, 1991.
"Complexity, High Price Keep Some Customers Away: Mobile Datacoms Taxes Users," Communications Week International, p. 20, Apr. 1, 1991.
"Consolidation, New Ventures Going Full Speed Ahead In All Markets," Industrial Communications, No. 36, p. 1, Oct. 6, 1989.
"Cutting The Ties That Bind," InformationWeek, vol. 314, pp. 25–30, Apr. 1, 1991.
"DEC On The Move: Teaming Ericsson In Mobile Data Market," Communications Week International, p. 1, Mar. 18, 1991.
"DEC Targets Mobile Data Market," Communications Week International, p. 9, Mar. 18, 1991.
"DEC–Ericsson Agreement," Communications Week, p. 25, Nov. 11, 1991.
"Descriptive Air Interface Protocol," Cognito Group Limited, V. 6.0, Aug. 19, 1991.
"Digital And Ericsson To Co–Operate Mobile Data," Exchange, vol. 3, No. 42, Nov. 1, 1991.
"Editorial: Telecom Trends," Newsbyte News Network, Dec. 24, 1991.
"Ericsson—Company Report First Boston Corporation (The)," Investext Report No. 813838, p. 9, Jun. 10, 1988.
"Ericsson—Company Report: Hoare Govett Investment Research Ltd," Investext Report No. 1039045, p. 22, Oct. 1, 1990.
"Ericsson—Company Report: Prudential Securities Inc.," Investext Report No. 1001955, p. 10, Mar. 19, 1990.
Ericsson—Company Report: Svenska International PLC', Ericsson Company Report, Svenska International PLC, Investext Report No. 1142535, p. 2, Oct. 4, 1991.
"Ericsson (L.M.) (Telefon A/B)—Company Report: FT Analysis," Ericsson (L.M.) (Telefon A/B) Company Report FT Analysis , Investext Report No. 6027183, p. 3, Nov. 19, 1991.
"Ericsson And Digital Cooperate On Mobile Communications," Newsbyte News Network Oct. 8, 1991, Newsbytes, Oct. 8, 1991.
"Ericsson And Digital Cooperated In Mobile Data," Business Wire, San Francisco, p. 1, Oct. 7, 1991.
"Ericsson And GE And Speedwing Mobile Communications Team Up To Bring Mobile Data Communications To Airports Worldwide," Business Wire, San Francisco, p. 1, Sep. 17, 1991.
"Ericsson And GE Have Fromed Joint Venture," Communications Daily, Aug. 28, 1989.
"Ericsson Announces Communications Software," Industrial Communications, No. 9, Mar. 1, 1991.
"Ericsson GE And Melard Technologies Announce A Strategic Alliance In Mobile Data Communications," Business Wire, San Francisco, p. 1, Sep. 30, 1991.
"Ericsson GE And Racotek Announce A Strategic Relationship For Mobile Data Communications," Business Wire, San Francisco, p. 1, Sep. 16, 1991.
"Ericsson GE And Racotek Inc. In Marketing Supply Deal," Alliance Alert–Medical Health, vol. 2, No. 10, Oct. 10, 1991.
"Ericsson GE And Speedwing Mobile Commun In Marketing Supply Deal," Alliance Alert–Medical Health, vol. 2, No. 10, Oct. 1991.
"Ericsson GE Awared $11.6 Million Contract From The U.S. Navy," Business Wire, San Francisco, p. 1, Nov. 10, 1993.
"Ericsson GE Awarded Contract From The City Of Richardson, Texas," Business Wire, San Francisco, p. 1, Oct. 10, 1991.
"Ericsson GE In Development Deal With Anterior And RIM," Newsbyte News Network, Nov. 20, 1991.
Ericsson GE In Joint Ventures To Develop Wireless E–Mail, Telecommunicatons Alert, vol. 8, No. 38, Nov. 19, 1991.
"Ericsson GE Mobile Communications New R&D Center Begins Operations In North Carolina," Business Wire, San Francisco, p. 1, Nov. 27, 1990.
"Ericsson GE Mobile Communications Opens Research And Development Center In North Carolina," Business Wire, San Francisco, p. 1, May 1, 1990.
"Ericsson GE Mobile Communications To manage Its Worldwide Cellular Telephone Business From RTP, N.C.," Business Wire, San Francisco, p. 1, Apr. 24, 1991.
"Ericsson GE Mobile Data And BRM Mobile Data Sign Agreements With GE Consumer Service," News Release, p. 1, Jul. 25, 1991.
"Ericsson GE Mobile Data And RAM Mobile Data Sign Agreements With GE Consumer Services," Business Wire, San Francisco, p. 1, May 9, 1991.
"Ericsson GE, Anterior Technology & Research In Motion (RIM)—Announce Wireless Access For E–Mail Users," News Release, p. 1, Nov. 18, 1991.
"Ericsson Gets $55M Pact for Cellular Radio Data Gear," Electronic News (1991), p. 19, Jun. 12, 1989.
"Ericsson Has Data Unit" Communications Week, p. 8, Jan. 8, 1990.
"Ericsson Mobile Data Formed In New Jersey," Communications Daily, Jan. 5, 1990.
"Ericsson Signs $55 Million Agreement With RAM Broadcasting For Mobile Data Network," Industrial Communications, No. 20, Jun. 2, 1989.
"Ericsson To Introduce Radio Modern Next Month," Telecommunications Alert, vol. 8, No. 56, Dec. 17, 1991.
"Ericsson/GE Announces New Agreements," Industrial Communications, No. 40, Oct. 4, 1991.
"Ericsson: Breakthrough $55 Million Agreement For Mobile Data Network In U.S.A.," Edge, vol. 4, No. 64, Jun. 12, 1989.
"Ericsson's Mobitex Mobile Data System Is Chosen By Cantel For Nationwide Public Mobile Data Service In Canada," News Release, Ericsson (LM) Telephone, p. 1, Dec. 1, 1988.
"FCC Calendar Of Events For The Week Of Feb. 11," FCC Daily Digest, vol. 10, No. 27, Feb. 8, 1991.
"IBM, Motorola Join Networks Forming 2–Way Data Offering," Industrial Communications, No. 5, p. 1, Feb. 2, 1990.
"Industry Briefs," Network World, vol. 8, No. 41, pp. 9, 11, Oct. 14, 1991.
Lead Story #2: Swedish Government Picks Magnovox AVL For Upcoming Trials, Inside IVHS, vol. 1, No. 3, Feb. 4, 1991.
"Minigrams," Computergram International, No. 1805, CGI11150023, Nov. 15, 1991.
"Mobidata And Cantel Set To Complete In Digital Mobile Data Market," Common Carrier Week, vol. 6, No. 21, May 22, 1989.

"Mobile Data Communications—A New Market," News Release, p. 1, Jul. 3, 1987.
"Mobile Data Communications: Erickson GE & Racotek In Strategic Relationship," Edge, vol. 6, No. 165, p. 6, Sep. 23, 1991.
"Mobile Data Communications: Ericsson GE & Racotek In Strategic Relationship," Edge, vol. 2, No. 70, p. 21, Sep. 23, 1991.
"Mobile Move," CommunicationsWeek International, No. 73, p. 3, Nov. 4, 1991.
"Mobile Users Get Electronic Mail Link (Anterior Technology)," Communications International, Dec. 13, 1991, No. 1823, CGI12120016.
"Motorola Inc.—Company Report: Kidder, Peabody & Company, Inc.," Investext Report No. 1011254, p. 2, May 15, 1990.
"MTEL WOOS FCC For Two–Way Data Net At 930–931 MHz," Industrial Communications, No. 47, Nov. 22, 1991.
"Multi–Channel Land Mobile Systems For Dispatch Traffic (With Or Without PSTN Interconnection)," ITU–R—International Telecommunication Union/ITU Radiocommunication Sector, Report No. 741–3, pp. 142–153, 1990.
"National Car Rental Chooses RAM For Data Network Services," Industrial Communications, VIS24, Jun. 14, 1991.
"National Mobile Data Network Sends Out Request For Information; Dream System In Mind Already," Industrial Communications, Oct. 21, 1988.
"Noise–Free Data Nets Introduced," Telecommunications Alert, vol. 8, No. 7, Jul. 1990.
"Nokia—Line Of Business Classification," Annual Report, 1987.
"Nordic Monthly—Geographic Report: Svenska International PLC," Invetext Report No. 1142734, p. 6, Oct. 1, 1991.
"Northern Indiana Public Service Company Selects $10 Million Ericsson GE Communications System," News Release, p. 1, Nov. 11, 1991.
"Other Manufacturers Developing Compatible Hardware," Industrial Communications, No. 48, Dec. 9, 1988.
"Radio–Linked Network To Be Offered To Airlines Sep. 19, 1991," Newsbyte, Inc., Sep. 19, 1991.
"RAM Adds Customers To Mobile Data Network," Industrial Communications, No. 14, Apr. 5, 1991.
"RAM Mobile Data And Ericsson GE Mobile Data Announce Agreements With Sears Business Centers," News Release, p. 1, Mar. 26, 1991.
"RAM Mobile Data Launches Network With Transcontinental Message," News Release, p. 1, Feb. 20, 1991.
"Ram Signs GE Consumers Service To A Pilot Test On Its Data Network," Industrial Communications, No. 19, Mar. 10, 1991.
"Sales Decline: Ericsson 9–Month Net Off 53%," Electronics News, vol. 37, Issue 18, 1991.
"Sears Business Centers To Market RAM's Mobile Data Network," Industrial Communications, No. 13, Mar. 29, 1991.
"Sears Inks Pacts With Ericsson, RAM Mobile Data," Computer Reseller News, 102, Issue 418, p. 1–2, Apr. 29, 1991.
"Service," Industrial Communications, No. 48, Dec. 9, 1988.
"Simware And Ram Mobile Data Network Sign Strategic Marketing Agreement," News Release, p. 1, Oct. 7, 1991.
"Smith Barney's Morning Call—Topical Report Smith Barney, Harris Upham & Co.," Investext Report, No. 1145237, p. 3, Oct. 11, 1991.
Wepman et al., "Spectrum Usage Measurements In Potential PCS Frequency Bands," IEEE–ICUPC '92 Proceedings, pp. 10–15, Sep. 29, 1992–Oct. 2, 1992.
"Strategic Agreement: Simware & Ericsson GE In Strategic Marketing Agreement For Laptop Computer Access To Corporate Mainframes," Edge, vol. 6, No. 169, p. 17, Oct. 21, 1991.
"Supporting Research And Advanced Development," NASA Space Programs Summary 37–48, vol. III, Jet Propulsion Laboratory, pp. 1–291, Dec. 31, 1967.
"Sweden Launches The World's First Public Radio Telecommunication Network For Text, Speech And Data," Newswire, Trade Publication, Industrial News Service, Feb. 24, 1987.
"Swedish Road Administration To Try Out Vehicle Location System," Industrial Communications Trade Publication, No. 14, Apr. 5, 1991.
"Swedish Telecom Mobitex Eases Mobile Frequency Congestion," Communications News, vol. 22, No. 4, p. 135, Apr. 1985.
"The Messenger MMI Specification," Mar. 1990.
Parsa, "The Mobitex Packet–Switched Radio Data System," IEEE, pp. 534–538, Jul. 1992.
"The OSPF Specification," Oct. 1989.
Bertoni et al., "Theoretical Prediction Of Slow Fading Statistics In Urban Environments," IEEE—ICUPC '92 Proceedings, pp. 1–4, Sep. 29, 1992–Oct. 2, 1992.
"Third–Quarter Losses Prompt Sizable Ericsson Layoffs," Industrial Communications, No. 47, Nov. 22, 1991.
Devasirvatham et al., "Two Frequency Radiowave Propagation Measurements In Brooklyn," IEEE—ICUPC '92 Proceedings, pp. 23–27, Sep. 29, 1992–Oct. 2, 1992.
"U.K. Mobile Data Licenses Granted," Communications Week International, No. 36, p. 18, Feb. 26, 1990.
"U.S. Army Selects Digitally Accessed Trunked Communications System For Training Centers," News Release, p. 1, Oct. 1, 1991.
"Update On Ardis–Mobitex Radio Modem Competition," Newsbytes, Inc., Oct. 2, 1991.
Xia et al., "Urban And Suburban Microcellular Propagation," IEEE—ICUPC '92 Proceedings, pp. 5–9, Sep. 29, 1992–Oct. 2, 1992.
"Vandals Wreck Cardphones To Increase Booty From Payphones," Europe 2000—Communications & Information Technology, vol. 13, No. 7, Sep. 1991.
"Vehicle Tracking And Communication Joint Venture," PRS Automotive Service, Aug. 22, 1991.
"Why Did Ericsson Pick Up The Long–For–Sale GE Subsidiary?," Mobile Phone News, vol. 7, No. 18, Aug. 31, 1989.
"Wireless Data: The Next Frontier For Cellular," Mobile Phone News, vol. 9, No. 24, pp. 4–6, Dec. 5, 1991.
"Wireless World: Ericsson GE Enters Lockdown Matrix Mobile Digital Telephone," Business Wire, San Francisco, p. 1, Oct. 7, 1991.
"Wireless World: Ericsson GE In Lockdown Matrix With Mobile Digital Telephone," Edge, vol. 6, No. 167, p. 29, Oct. 7, 1991.
"Wireless World: Ericsson GE, Anterior Technology & Research In Motion Announced Wireless Access For E–Mail Users," Business Wire, San Francisco, p. 1, Nov. 18, 1991.
"Wireless World: Ericsson GE, Anterior Technology & Research In Motion (RIM) Announce Wireless E–Mail," Edge, vol. 6, No. 174, p. 4, Nov. 25, 1991.

"Year's Biggest Stories Land In Personal Communications, Spectrum (Part 1)" Industrial Communications, No. 1, Jan. 4, 1991.
Abowd et al., "Cyberguide: A Mobile Context–Aware Tour Guide," Wireless Networks, vol. 3, pp. 421–433, 1997.
Afek et al., "End–To–End Communication In Unreliable Networks," Proceedings Of The 7th Annual ACM Symposium On Principles Of Distributed Computing (Toronto, Ontario, Canada), pp. 131–148, 1988.
Aguirre et al., "Signal Strength Measurements At 915 MHz and 1920 MHz In An October Microcell Environment," IEEE—ICUPC '92 Proceedings, pp. 16–22, Sep. 29, 1992–Oct. 2, 1992.
Olmos et al., "Performance Analysis Of A Second Order Delay–Lock Loop With Application To A CDMA System With Multipath Propagation," IEEE—ICUPC '92 Proceedings, pp. 209–213, Sep. 29, 1992–Oct. 2, 1992.
Akaiwa et al., "The Channel Segregation, A Self–Organized Dynamic Channel Allocation Method: Application to TDMA/FDMA Microcellular System," IEEE—ICUPC '92 Proceedings, pp. 346–349, Sep. 29, 1992–Oct. 2, 1992.
Alfano et al., "UPT Supplementary Services European Standards Scenario," IEEE—ICUPC '92 Proceedings, pp. 69–73, Sep. 29, 1992–Oct. 2, 1992.
Ameden, "Activities Of The Cellular Telecommunications Industry Association Microcell/Microsystems Subcommittee Regarding Microcell Technology," IEEE—ICUPC '92 Proceedings, pp. 147–150, Sep. 29, 1992–Oct. 2, 1992.
Aoki, "Improved Output Spectrum Of Linearized Class–F Power Amplifier For Digital Cellular Mobile Communications," IEEE—ICUPC '92 Proceedings, pp. 195–198, Sep. 29, 1992–Oct. 2, 1992.
Arndt et al., "International Standards On Universal Personal Telecommunications: State Of The Art And Future Projections," IEEE—ICUPC '92 Proceedings, pp. 59–63, Sep. 29, 1992–Oct. 2, 1992.
Assarsson, "Technology, Know–How And Teamwork—The Vital Circle In A Ro–Ro Port," Report No. 0–904930–27–0, pp. 138–142, 1984.
Badrinath et al., "Designing Distributed Algorithms For Mobile Computing Networks," Proceedings Of The Second Workshop On The Management Of Replicated Data Rutgers University, pp. 1–13, 1994.
Badrinath et al., "To Send Or Not To Send: Implementing Deferred Transmission In Mobile Host," ICDS, Hong Kong, pp. 1–17, Jun. 1996.
Balakrishnan et al., "Improving Reliable Transport And Handoff Performance In Cellular Wireless Networks," Wireless Networks, vol. 1, pp. 469–481, 1995.
Bart, "Vendors Join The Wireless Bandwagon," Communications International, vol. 18, No. 19, p. 25, Oct. 1991.
Bartoli, "Group–Based Multicast And Dynamic Membership In Wireless With Incomplete Spatial Coverage," Mobile Networks And Applications 3, pp. 175–188, 1998.
Bean, "Paging At The Crossroads—Industry Report," Arthur D. Little Decision Resources, Inc., Investext Report No. 1111592, pp. 5–6, Jun. 27, 1990.
Bedingfield, "On The Concept Of A Service Host For Personal Communications Services," IEEE—ICUPC '92 Proceedings, Sep. 29, 1992–Oct. 2, 1992, IEEE—ICUPC '92 Proceedings, pp. 314–318, Sep. 29, 1992–Oct. 2, 1992.
Berkman, "Ericsson Is Restructuring To Adapt To A Deregulated Global Market," Electronic Business, vol. 17, No. 2, pp. 34–38, Jan. 21, 1991.
Biba, "A Hybrid Wireless MAC Protocol Supporting Asynchronous And Synchronous MSDU Delivery Services," IEEE 802.11/91–92, Sep. 1991.
Binkley et al., "Authenticated Ad Hoc Routing At The Link Layer For Mobile Systems," Wireless Networks, vol. 7, 1999.
Blankenhorn, Pac Tel Cellular Introduces Microcells In Los Angeles, Newsbytes, Inc., Oct. 2, 1991.
Blazevic et al., "Self–Organizing Wide–Area Routing," Proc. Of SCI, pp. 1–8, 2000.
Boncompagni et al., "Comments: Telecom Leaders From Around The World Reveal their Plans For The Future," Telepony, vol. 216, No. 9, p. 28, Feb. 27, 1989.
Booker, "Cellular Modems Put The Office On The Road," Computerworld, vol. 25, No. 10, pp. 43–44, Mar. 11, 1991.
Booker, "Wireless Networks Create Tough Choices," Computerworld, vol. 25, No. 48, pp. 55–56, Dec. 3, 1991.
Borgman, "Telefonaktiebolaget Lm Ericsson—Company Report: Dillon, Read & Co.," Investext Report No. 1008947, p. 12, May 21, 1990.
Boyer, "An Analytical Comparison Of Block Error Rate Performance For Wireline Data Modulation Standards In A Variably Fading Ricean Analog Cellular Channel," IEEE—ICUPC '92 Proceedings, pp. 121–125, Sep. 29, 1992–Oct. 2, 1992.
Bragwad et al., "Advanced Intelligent Network Requirements For Personal Communications Services," IEEE—ICUPC '92 Proceedings, pp. 324–328, Sep. 29, 1992–Oct. 2, 1992.
Brodsky, "Wireless Data Networks And The Mobile Workforce," Telecommunications, vol. 24, p. 31, Dec. 1990.
Brodsky, "Wireless MANs/WANs Offer 'Data To Go'," Business Communications Review, vol. 21, No. 2, p. 45–51, Feb. 1991.
Buck, "Tele–Trends—Industry Report, Donaldson, Lufkin & Jenrette Securities Corp.," Investext Report No. 814739, p. 8, Jun. 24, 1988.
Bulusu et al., "Scalable Coordination For Wireless Sensor Networks: Self–Configuring Localization Systems," Proceedings Of The 6th International Symposium On Communication Theory And Applications (ISCTA), pp. 1–6, Jul. 2001.
Bushaus, "GE, Ericsson In Cellular Pact," Telephony's AM Report, vol. 217, No. 10, p. 3, Aug. 28, 1989.
Caceres et al., Fast And Scalable Wireless Handoffs In Support Of Mobile Internet Audio, Mobile Networks And Applications 3, pp. 351–363, 1998.
Cáceres et al., "The Effects Of Mobility On Reliable Transport Protocols," International Conference On Distributed Computing Systems, Nov. 1, 1993.
Cáceres et al., "Improving The Performance Of Reliable Transport Protocols In Mobile Computing Environments," IEEE Journal On Selected Areas In Communications, vol. 13, No. 5, pp. 1–10, Jun. 1995.
Calhoun, "Digital Cellular Radio," 1988.
Callendar, "Standards For Global Personal Communications Services," IEEE—ICUPC '92 Proceedings, pp. 163–167, Sep. 29, 1992–Oct. 2, 1992.
Camazza et al., "PCS Data Management In An Intelligent Network," IEEE—ICUPC '92 Proceedings, pp. 329–333, Sep. 29, 1992–Oct. 2, 1992.
Campbell et al., "A Cellular IP Testbed Demonstrator," Center For Telecommunications Research, Columbia University, New York, pp. 1–4, 1999.

Carpintero et al., "Requirements For The Interconnection Of Base Stations In A Wireless System," IEEE—ICUPC '92 Proceedings, pp. 141–146, Sep. 29, 1992–Oct. 2, 1992.
Cellular Data Network Functional Specification Rev. 2.0.2, Oct. 5, 1992.
Cellular Digital Packet Data System Specification Overview.
Cellular Digital Packet Data System Specification Preliminary Release 0.8—Book 1, Mar. 19, 1993.
Cellular Digital Packet Data System Specification Preliminary Release 0.8—Book II, Mar. 19, 1993.
Cellular Digital Packet Data System Specification Preliminary Release 0.8—Book III, Mar. 19, 1993.
Cellular Digital Packet Data System Specification Release 0.3 Preliminary Working Draft, Dec. 28, 1992.
Cellular Digital Packet Data System Specification Release 0.8—Book IV, Mar. 19, 1993.
Cellular Digital Packet Data System Specification Release 0.8—Book V, Mar. 19, 1993.
Cellular Digital Packet Data System Specification Release 0.9—Preliminary Draft, N/A, Apr. 30, 1993.
Cellular Digital Packet Data System Specification Release 1.0—Book II, Jul. 19, 1993.
Cellular Digital Packet Data System Specification Release 1.0—Book III, Jul. 19, 1993.
Cellular Digital Packet Data System Specification Release 1.0—Book IV, Jul. 19, 1993.
Cellular Digital Packet Data System Specification Release 1.0—Book V, Jul. 19, 1993.
Cellular Digital Packet Data System Specification Release 1.0—Book I, Jul. 19, 1993.
Cellular Digital Packet Data System Specification Release 1.1—Book 1, 1995 CDPD Forum, Inc., Jan. 19, 1995.
Cellular Digital Packet Data System Specification Release 1.1—Book 2, 1995 CDPD Forum, Inc., Jan. 19, 1995.
Cellular Digital Packet Data System Specification Release 1.1—Book 3, 1995 CDPD Forum, Inc., Jan. 19, 1995.
Cellular Digital Packet Data System Specification Release 1.1—Book 4, 1995 CDPD Forum, Inc., Jan. 19, 1995.
Cellular Digital Packet Data System Specification Release 1.1—Book 5, 1995 CDPD Forum, Inc., Jan. 19, 1995.
Cellular Digital Packet Data System Specification Release 1.1—Book 6, 1995 CDPD Forum, Inc., Jan. 19, 1995.
Cellular Digital Packet Data System Specification Release 1.1—Book 7, 1995 CDPD Forum, Inc., Jan. 19, 1995.
Cellular Digital Packet Data System Specification Release 1.1—Book 8, 1995 CDPD Forum, Inc., Jan. 19, 1995.
Chang, "Dispersive Fading Effects In CDMA Radio Systems," IEEE—ICUPC '92 Proceedings, pp. 185–189, Sep. 29, 1992–Oct. 2, 1992.
Chen et al., "Signaling System No. 7 Network Interconnect Impacts In Support Of Mobile Communications Services," IEEE—ICUPC '92 Proceedings, pp. 247–252, Sep. 29, 1992–Oct. 2, 1992.
Chuang, "Frequency Reuse For Two Co–Existing TDMA Personal Communications Systems," IEEE—ICUPC '92 Proceedings, pp. 350–354, Sep. 29, 1992–Oct. 2, 1992.
Ciancetta et al., "Universal Personal Telecommunication Provision Within Intelligent Networks," IEEE—ICUPC '92 Proceedings, pp. 319–323, Sep. 29, 1992–Oct. 2, 1992.
Connolly, "Mobile Data Mission," Communications, vol. 27, No. 8, pp. 41–48, Aug. 1990.
Coursey, Mobile Computing Matures: Radio Modems Will Let Portables Send, Recieve E–Mail, InfoWorld, vol. 13, Issue 51, p. 28, 1991.
Craninckx et al., "Wireless CMOS Frequency Synthesizer Design," 1998.
Cunningham, "Rascal Telecom—Company Report Scrimgeour Vickers," Investext Report No. 908246, Feb. 17, 1989.
Davis et al., "Filtered Spreading Sequences For Interference Avoidance," IEEE—ICUPC '92 Proceedings, pp. 54–58, Sep. 29, 1992–Oct. 2, 1992.
Didner, "Data Goes Mobile," Telephony, Mar. 11, 1991, vol. 220, No. 10, pp. 24–25.
Didner, "The Next Step In Mobile Communications," Telecommunications, Dec. 1990, vol. 24, No. 12, p. 48–50.
Dommety et al. "Flat Location Management Scheme For PCNs," 1997.
Dube et al., "Signal Stability Based Adaptive Routing (SSA) For Ad–Hoc Mobile Networks," IEEE Personal Communication, pp. 1–22, Aug. 26, 1996.
Duet, "An Assessment Of Duplexing Methods For The Radio Links Of Personal Communication Systems," IEEE—ICUPC '92 Proceedings, pp. 131–135, Sep. 29, 1992–Oct. 2, 1992.
Earnshaw, "The Topology Discovery Service," oo. 111–118, Feb. 18, 1993.
Edwards, "Simware Targets Software At RF Wireless Market," Computing Canada, vol. 17, No. 23, p. 53, Nov. 7, 1991.
Egan et al., "City Of Dallas Fire Department Purchases $4 Million Ericsson GE Communications Systems," Business Wire, San Francisco, Oct. 16, 1991.
Egan et al., "Ericsson And GE Form Mobile Communications Joint Venture," Business Wire, San Francisco, p. 1, Aug. 24, 1989.
Egan et al., "McCaw Cellular, LIN Broadcasting To Rebuild Cellular Systems In N.Y., N.J. Pacific Northwest With Ericsson GE Equipment," Business Wire, San Francisco, p. 1, Oct. 10, 1990.
Egan et al., "SaskTel Purchases New Ericsson GE Communications System To Serve Saskatchewan," Business Wire, San Francisco, p. 1, Oct. 23, 1991.
Egan, "Ericsson Signs Breakthrough Agreement For Mobile Data Network," Business Wire, San Francisco, p. 1, May 31, 1989.
Elson et al., "Fine–Grained Network Time Synchronization Using Reference Broadcasts," pp. 1–14, May 17, 2002.
Eng et al., "A Wireless Broadband Ad–Hoc ATM Local–Area Network," Wireless Networks 1, pp. 161–174, 1995.
Epstein, "Indigenous Switching," Industry Report: Arthur D. Little Decision Resources, Incorporated, Investext Report No. 938157, p. 6, Jul. 1, 1987.
Ergen et al., "MEWLANA–Mobile IP Enriched Wireless Local Area Network Architecture," Proc. OF IEEE Vehicular Technology Conference (Vancouver), vol. 4, pp. 2449–2453, Mar. 2002.
Fenner, Mobil Address Management And Billing For Personal Communications, IEEE—ICUPC '92 Proceedings, pp. 253–257, Sep. 29, 1992–Oct. 2, 1992.
Foyil, "Nokia—Company Report: UBS Phillips & Drew Global Research Group," Investext Report No. 1034219, p. 2, Oct. 8, 1990.
Frangini, "Rogers Cantel Launches 'Public Access' Mobile Network," Computing Canada, vol. 16, No. 12, p. 53, Jun. 7, 1990.
Fraser, "The Mobitex Terminal Specification," Communications, vol. 28, No. 7, pp. 33–38, Jul. 1991.

Fraser, "The MTS—Part II," Communications, vol. 28, No. 8, pp. 52–55, Aug. 1991.

Fudge, "Third Generation Mobile Systems—What They Will Do And Who Decide," IEEE—ICUPC '92 Proceedings, pp. 433–442, Sep. 29, 1992–Oct. 2, 1992.

Gates, "Computers Enter The Wireless Age: New Technology Can Link Terminals Spanning Globe," Financial Post, p. 13, Jun. 8, 1991.

Ghassemian, "Evaluation Of Different Schemes For Cellular IP," Master's Thesis, Kings College, London, 2001.

Goldberg, "Systems Engineering And Program Management For Personal Communications In T1P1," IEEE—ICUPC '92 Proceedings, pp. 151–157, Sep. 29, 1992–Oct. 2, 1992.

Goodman, "Cellular Packet Communications," IEEE Transactions On Communications, vol. 38, No. 8, Aug. 1990.

Gross, "Telephone Lines—Industry Report, Donaldson, Lufkin & Jenrette Securities," Industry Report, Investext Report No. 1149341, p. 14, Nov. 11, 1991.

Haber, "The Art Of Wireless Computing," Midrange Systems, vol. 4, No. 16, p. 66, Aug. 6, 1991.

Hasselberg, "Mobitex Permits Tailored Telecom," Tele (English Edition), No. 2, vol. XXXXI, pp. 14–16, 1988.

Haug et al., "Microcellular Radio Performance In A Rayleigh/Rician CoChannel Interference Environment," IEEE—ICUPC '92 Proceedings, pp. 112–115, Sep. 29, 1992–Oct. 2, 1992.

Hayes et al., "Personal Satellite Communications Utilizing The KA–Band," IEEE—ICUPC '92 Proceedings, pp. 385–390, Sep. 29, 1992–Oct. 2, 1992.

Hightower et al., "Design And Calibration Of The SpotON Ad–Hac Location Sensing System," pp. 1–18, Aug. 2001.

Hines, "LM Ericsson—Company Report: Paine Webber Inc.," Investext Report No. 1153781, p. 9, Dec. 10, 1991.

Hirschman, "Service Mobility/Transparency For Personal Communications," IEEE—ICUPC '92 Proceedings, pp. 334–338, Sep. 29, 1992–Oct. 2, 1992.

Ho, "Effects Of Antenna Polarization And Beam Pattern On Multipath Delay Spread And Path Loss In Indoor Obstructed Wireless Channels," IEEE—ICUPC '92 Proceedings, pp. 92–96, Sep. 29, 1992–Oct. 2, 1992.

Hodes et al., "Composable Ad–Hoc Location–Based Services For Heterogeneous Mobile Clients," Wireless Networks, vol. 5, pp. 411–427, 1999.

Honcharenk et al., "Theoretical Prediction Of UHF Propagation Within Office Buildings" IEEE—ICUPC '92 Proceedings, pp. 102–105, Sep. 29, 1992–Oct. 2, 1992.

Huang et al., "OPNET Simulation Of A Multi–Hop Self–Organizing Wireless Sensor Network," Florida Communication Research Labs, Fort Lauderdale, FL 33322, 2002.

Hunt, "The Regulatory Environment For Personal Communications In The Post–WARC–92 Period," IEEE—ICUPC '92 Proceedings, pp. 429–432, Sep. 29, 1992–Oct. 2, 1992.

Ionnidis et al., "IP–Based Protocols For Mobile Internetworking," Proceedings Of Conference On Communications Architecture & Protocols, pp. 1–17, 1991.

Ionnidis et al., "IP–Based Protocols For Mobile Internetworking," Proceedings Of Conference On Communications Architecture & Protocols, 1991.

Jain, "Characteristics Of Destination Address Locality In Computer Networks: A Comparison Of Caching Schemes," Jun. 25, 1990.

Jakobs et al., "Electronic Mail In Broadcast Networks," IEEE—ICUPC '92 Proceedings, pp. 412–416, Sep. 29, 1992–Oct. 2, 1992.

Jalali et al., "Performance Of Data Protocols For In–Building Wireless Systems," IEEE—ICUPC '92 Proceedings, pp. 407–411, Sep. 29, 1992–Oct. 2, 1992.

Jetcheva et al., "Adaptive Demand–Driven Multicast Routing In Multi–Hop Wireless Ad Hoc Networks," Proceedings Of The 2nd ACM International Symposium On Mobile Ad–Hoc Networking & Computing (Long Beach Session: Routing And Transport), pp. 33–44, 2001.

Johansson et al., "Scenario–Based Performance Analysis Of Routing Protocols For Mobile Ad–Hoc Networks," Proceedings Of The 5th Annual ACM/IEEE International Conference On Mobile Computing And Networking (Seattle), pp. 195–206, 1999.

Johansson, "The Mobitex Experience," Paper Presented At International Mobile Communications (London 1990), pp. 55–68, Jun. 1990.

Jung et al., "A Power Saving MAC Protocol For Wireless Networks," Department Of Computer Science, Texas A&M University, Technical Report, Jul. 2002.

Jung et al., "An Energy Efficient MAC Protocol For Wireless LAN's," Department Of Computer Science, Texas A&M University, Technical Report TR01–017, Jul. 31, 2001.

Kaplan, "The Network In Your Pocket," Business Communications Review, vol. 21, No. 3, p. 112, Mar. 1991.

Karp et al., "GPSR: Greedy Perimeter Stateless Routing For Wireless Networks," Proceedings Of The 6th Annual International Conference On Mobile Computing And Networking (Boston), pp. 243–254, 2000.

Karp, "Geographic Routing For Wireless Networks, PhD Thesis, Harvard University," Oct. 2000.

Katz, "The Use Of Connectionless Network Layer Protocols Over FDDI Networks," ACM SIGCOMM Computer Communication Review, vol. 20(3), pp. 32–45, 1990.

Kay, "Extended–TDMA™ A High Capacity Evolution Of U.S. Digital Cellular," IEEE—ICUPC '92 Proceedings, pp. 182–184, Sep. 29, 1992–Oct. 2, 1992.

Kearns, "Scope Of ZENworks 7 Suite Stretches Far And Wide," Network World, (http://www.networkworld.com\newsletters\netware\2005\0829nw1.html), Aug. 30, 2005.

Khandani et al., "ISI–Reduced Modulation Over A Fading Multipath Channel," IEEE—ICUPC '92 Proceedings, pp. 288–292, Sep. 29, 1992–Oct. 2, 1992.

Kiang, "Characteristics Of Two–Alternative Frequency Channel Assignment Methods For TDMA Wireless Access Systems," IEEE—ICUPC '92 Proceedings, pp. 355–358, Sep. 29, 1992–Oct. 2, 1992.

Kiang, "Geometrical Ray Tracing Approach For Indoor Wave Propagation In A Corridor," IEEE—ICUPC '92 Proceedings, pp. 106–111, Sep. 29, 1992–Oct. 2, 1992.

Kikuta, "Global UPT Architecture With International Mobility Management," IEEE—ICUPC '92 Proceedings, pp. 229–235, Sep. 29, 1992–Oct. 2, 1992.

Kilpatrick, "Mobile Packet–Switched Data Networks," RF Expo East, Orlando, FL, pp. 367–369, Oct. 29, 1991–Oct. 31, 1991.

Kim, "KBLCOM Eyes Automated Customer Service System," Multichannel News, vol. 12, No. 12, p. 102, Mar. 25, 1991.

Kleeman, "Optimal Estimation Of Position And Heading For Mobile Robots Using Ultrasonic Beacons And Dead–Reckoning," Proceedings Of The 1992 IEEE International Conference On Robotics And Automation (Nice, France), 1992.

Krashinsky et al., "Minimizing Energy For Wireless Web Access With Bounded Slowdown," Proc. ACM Mobicon 02:119–130, 2002.

Krechmer, "A Review Of US Mobile Communications Standards," Telecommunications, vol. 25, No. 7, p. 43–45, Jul. 1991.

Kriz et al., "Spread Spectrum Indoor Video Transmission," IEEE—ICUPC '92 Proceedings, pp. 421–425, Sep. 29, 1992–Oct. 2, 1992.

Ku, "The Outlook OF DCS 1800 For Personal Communications Networks," IEEE—ICUPC '92 Proceedings, pp. 168–171, Sep. 29, 1992–Oct. 2, 1992.

Kubo et al., "Simulated Tolerance Of Loop Parameters Of Cartesian Feedback Amplifier For π/4—Shifted QPSK Transmitter," IEEE—ICUPC '92 Proceedings, pp. 136–140, Sep. 29, 1992–Oct. 2, 1992.

Kumar, "Antennas For MSAT Ground Terminals," IEEE—ICUPC '92 Proceedings, pp. 219–223, Sep. 29, 1992–Oct. 2, 1992.

Kwok, "Wireless Networking Requirements Of Multimedia Applications," IEEE—ICUPC '92 Proceedings, pp. 402–406, Sep. 29, 1992–Oct. 2, 1992.

Lambert, "Security Universal Personal Communications," IEEE—ICUPC '92 Proceedings, pp. 44–48, Sep. 29, 1992–Oct. 2, 1992.

Larsen, "Marketing Mobile Data Services And Equipment," Proceedings Of Cellular & Mobile Communications 88, pp. 111–116, Nov. 1988.

Larsen, "Mobitex—A System For Mobile Data Communication," Information Network And Data Communication, III, Proceedings Of The IFIP TC6 International Conference On Information Network And Data Communication, Lillehammer, Norway, pp. 239–247, Mar. 1990.

Larsen, "Mobitex—Public Mobile Radio Service," Communications International, vol. 13, Pt. 10, p. 96, Oct. 1986.

Lau et al., "Interworking Of Satellite And Terrestrial Networks For Land Mobile Communications," IEEE—ICUPC '92 Proceedings, pp. 375–379, Sep. 29, 1992–Oct. 2, 1992.

Laval, "Briefing Document For A Brochure On The Cognito Mobile Messaging Service," Cognito Group Limited, May 22, 1990.

Lawson–Jenkins, "The Role of GSM In The Development Of Standards For A Worldwide Personal Communication Network," IEEE—ICUPC '92 Proceedings, pp. 79–81, Sep. 29, 1992–Oct. 2, 1992.

Leibowitz et al., "Rogers Cantel Mobile Communications Inc.—Company Report," Donaldson, Lufkin & Jenrette Securities, Investext Report No. 1145153, Oct. 15, 1991.

Lin et al., "A Two–Stage Maximum Likehood Sequence Estimation Technique And Its Application To Data Transmission Protocol In Digital Cellular Radio," IEEE—ICUPC '92 Proceedings, pp. 303–307, Sep. 29, 1992–Oct. 2, 1992.

Linnartz et al., "Performance Of Personal Communication Networks With Error Correction Coding In Microcellular Channels," IEEE—ICUPC '92 Proceedings, pp. 308–313, Sep. 29, 1992–Oct. 2, 1992.

Lo et al., "An Estimate Of Network Database Transaction Volume To Support Personal Communications Services," IEEE—ICUPC '92 Proceedings, pp. 236–241, Sep. 29, 1992–Oct. 2, 1992.

Ionnidis et al., "The Design And Implementation Of A Mobile Internetworking Architecture," 1993 Winter USENIX, San Diego, CA, pp. 489–500, Jan. 25, 1993–Jan. 29, 1993.

Loberg et al., "Mobitex—The New Swedish Cellular Mobile Radio Service," International Conference On Radio Receivers & Associated Systems (4th: 1986), Pub. No. 68, pp. 77–82, 1986.

Loberg et al., "Mobitex Brings A New Look To Dispatch Communications," Communications International, vol. 12, no. 2, pp. 25–32, Feb. 1985.

Long et al., "Rapid Prototyping Of Mobile Context–Aware Applications: The Cyberguide Study," Proceedings Of The 2nd Annual International Conference On Mobile Computing And Networking, (Rye, NY), 1996.

Loudermilk, "Trio Throws Weight Behind Radio E–Mail Technology," PC Week, vol. 8, No. 48, p. 39, Dec. 2, 1991.

Lusa, "The ITU's Quadrennial Telecom Show In Geneva Attracts And Dazzles Thousands," Networking Management, vol. 9, No. 14, pp. 12–14, Dec. 1991.

Lycksell, "Mobitex: A New Radio Communication System For Dispatch Traffic," Tele (English Edition), vol. 35, Issue 1, pp. 68–75, 1983.

Madhow, "Minimum Mean Squared Error Interference Suppression For Direct–Sequence Spread–Spectrum Code–Division Multiple–Access," IEEE—ICUPC '92 Proceedings, pp. 273–277, Sep. 29, 1992–Oct. 2, 1992.

Malyan et al., "A Wireless Personal Communications Architecture For Urban Areas," IEEE—ICUPC '92 Proceedings, pp. 116–120, Sep. 29, 1992–Oct. 2, 1992.

Mandell et al., "A Comparison Of CDMA And Frequency Hopping In A Cellular Environment," IEEE—ICUPC '92 Proceedings, pp. 172–176, Sep. 29, 1992–Oct. 2, 1992.

Maric et al., "Microcell Planning And Channel Allocation For Manhattan Street Environments," IEEE—ICUPC '92 Proceedings, pp. 359–363, Sep. 29, 1992–Oct. 2, 1992.

Mathy et al., "An Overlay Tree Building Protocol," J. Crowcroft And M. Hoffman (Eds.) Springer–Verlag Berlin Heidelberg, pp. 76–87, 2001.

McIlwain et al., "Routing Technology Software Inc. And Ericsson GE Team Up To Provide 'Roadshow' Routing Application To Mobitex Networks Worlswide," Business Wire, San Francisco, Jun. 6, 1991.

Mokhtar et al., "Capacity For Cellular CDMA PCS's In Nakagami Fading Log–Normal Shadowing Channels," IEEE—ICUPC '92 Proceedings, pp. 190–194, Sep. 29, 1992–Oct. 2, 1992.

Morrison et al., "Statistical Analysis And Autoregressive Modeling Of The Indoor Radio Propagation Channel," IEEE—ICUPC '92 Proceedings, pp. 97–101, Sep. 29, 1992–Oct. 2, 1992.

Mulqueen, "Mobile Data Network Debuts," Data Communications, p. 78, Jan. 1991.

Murphy et al., "UPT: Mobility vs. Portability," IEEE—ICUPC '92 Proceedings, pp. 224–228, Sep. 29, 1992–Oct. 2, 1992.

Murthy et al., "A Routing Protocol For Packet Radio Networks," Proceedings Of The 1st Annual International Conference On Mobile Computing And Networking (Berkeley), pp. 86–95, 1995.

Murthy et al., "An Efficient Routing Protocol For Wireless Networks," Mobile Networks And Applications 1, pp. 183–197, 1996.
Nakajima et al., "Intelligent Network Architecture For Personal Mobile Telecommunication," IEEE—ICUPC '92 Proceedings, pp. 339–344, Sep. 29, 1992–Oct. 2, 1992.
Nichols, "LM Ericsson—Company Report: Prudential Securities Inc.," Investext Report No. 1035361, p. 19, Oct. 11, 1990.
Nikaein et al, "DDR–Distributed Dynamic Routing Algorithm For Mobile Ad Hoc Networks," Proc. Of The 1st Annual ACM International Symposium On Mobile Ad Hoc Networking & Computing (Boston), Session A, pp. 19–27, 2000.
Noel et al., "The Development Of An 8 KBPS GMSK—Like Modem For Mobitex," IEEE Pacific Rim Conference On Communications, Computers And Signal Processing, vol. 2, pp. 791–794, May 9, 1991–May 10, 1991.
Noerpel, "Hybrid Signaling For The Air Interface For A Wireless Access Communication System," IEEE—ICUPC '92 Proceedings, pp. 49–53, Sep. 29, 1992–Oct. 2, 1992.
O'Byrne, "Digital Cellular Over The Cable Television Fiber–Optic Plant," IEEE—ICUPC '92 Proceedings, pp. 205–208, Sep. 29, 1992–Oct. 2, 1992.
Pande et al., "Application Of Wireless Access To Telecommunication Services In Developing Countries," IEEE—ICUPC '92 Proceedings, pp. 82–86, Sep. 29, 1992–Oct. 2, 1992.
Perlman, "An Algorithm For Distributed Computation Of A Spanning Tree In An Extended LAN," Proceedings Of The Ninth Symposium On Data Communications (Whistler Mountain, British Columbia, Canada), pp. 44–53, 1985.
Perlman, "Incorporation of Multiaccess Links Into A Routing Protocol," Proceedings Of The Eight symposium On Data Communications (North Falmouth, MA), pp. 85–94, 1983.
Pouwelse et al., "Power Consumption Trade–Offs For Wireless Audio Access," Delft University Of Technology, 2000.
Powell, "Cellular Telephones Give Way To Mobile Communications," Communications Canada, p. 35, Jun. 22, 1989.
Powell, "Use Cellular To Support Datacom Applications," Networking Management, vol. 9, No. 5, pp. 30–34, Apr. 1991.
Prakash, "A Routing Algorithm For Wireless Ad Hoc Networks With Unidirectional Links," Wireless Networks, vol. 7, pp. 617–625, 2001.
Prakash, "Unidirectional Links Prove Costly In Wireless Ad Hoc Networks," Proceedings Of The 3rd International Workshop On Discrete Algorithms And Methods For Mobile Computing And Communication (Seattle), pp. 15–22, 1999.
Preston, "Ericsson, GE Form Mobile Venture," Communications Week International, No. 25, p. 9, Aug. 21, 1989.
Priyantha et al., "The Cricket Compass For Context–Aware Mobile Applications," Proceedings Of The 7th Annual International Conference On Mobile Computing And Networking (MOBICOM 2000), pp. 1–14, 2001.
Purton, "BT Admits Impact Of Recession But Still Manages To Improve Results," Europe 2000—Communications & Information Technology, vol. 3, No. 7, pR 93(1), Sep. 1991.
Ramësh et al, "Spectral Shaping Using Coded Modulation For Mobile Radio," IEEE—ICUPC '92 Proceedings, pp. 298–302, Sep. 29, 1992–Oct. 2, 1992.
Reinbold et al., "A Comparison Of IP Mobility Protocols," Tech. Rep. Infonet–TR–13, Dec. 2001.
Reiter, "Three Cellular Modems," PC Magazine, vol. 9, No. 22, p. 365, Dec. 25, 1990.
Rodrigues et al., "Rural Satellite Service: A Mexican View," IEEE—ICUPC '92 Proceedings, pp. 380–384, Sep. 29, 1992–Oct. 2, 1992.
Rohani et al., "Low Cost High Performance CDMA System For U.S. PCS," IEEE—ICUPC '92 Proceedings, pp. 278–282, Sep. 29, 1992–Oct. 2, 1992.
Röhl et al., "A Short Look On Power Saving Mechanism In The Wireless LAN Standard" Draft IEEE 802.11, pp. 1–6, 1997.
Royer et al., "Multicast Operation Of The Ad–Hoc On–Demand Distance Vector Routing Protocol," Proceedings Of the 5th Annual ACM/IEEE International Conference On Mobile Computing And Networking (Seattle), pp. 207–218, 1999.
RPM Native Mode Interface R1.1.1 Reference Manual, May 1, 1992.
Salkintzis et al., "Mobile Packet Data Technology: An Insight Into Mobitex Architecture," IEEE Personal Communications, pp. 10–18, Feb. 1997.
Sanford et al., "Facade Integrated Microstrip Patch Antennas Applied To Personal communication Networks,"IEEE—ICUPC '92 Proceedings, pp. 214–218, Sep. 29, 1992–Oct. 2, 1992.
Savage, "A Technology To Link Professionals On The Road To Central Information Systems: Mobitex Public Networks In Europe," World Congress On Applications Of Transport Telematics And Intelligent Vehicle–Highway Systems, vol. 5, pp. 2662–2668, 1995.
Schwartz, "Ericsson Set To Debut Radio Modems," Communications Week, p. 21, Dec. 2, 1991.
Seshan et al., "The Role Of Digital Signal Processing In Personal Communications Networks," IEEE—ICUPC '92 Proceedings, pp. 200–204, Sep. 29, 1992–Oct. 2, 1992.
Seshan, "Low–Latency Handoff For Cellular Data Networks," Ph.D. Thesis, University Of California At Berkeley, 1995.
Sheety et al., "Development In Mobile Markets," Communications International, vol. 18, No. 12, p. 47, Dec. 1991.
Sneed, "A 2–GHz CMOS LC–Tuned VCO Using Switched–Capacitors To Compensate For Bond Wire Inductance Variation," University Of California, Berkeley, pp. 1–51, Dec. 21, 2000.
Sollenberger et al., "An Efficient TDMA Radio Link And Architecture For Wireless Local Access," IEEE—ICUPC '92 Proceedings, pp. 262–266, Sep. 29, 1992–Oct. 2, 1992.
Srisathapornpat et al., "Coordinated Power Conservation For Ad Hoc Networks," IEEE International Conference On Communications, 25(1), pp. 3330–3335, 2002.
Stein, "Greater Efficiency With Mobile Data Communication," Ericsson Review, vol. 68, Issue 4, pp. 104–110, 1991.
Steinert–Threlkeld, "Ericsson Unit To Aid New Network; Richardson Firm To Provide Equipment For Cellular Data Link," The Dallas Morning News, Record No. DAL1073150, Jun. 1, 1989.
Sudame et al., "On Providing Support For Protocol Adaptation In Mobile Wireless Networks," Mobile Networks And Applications 6, pp. 43–55, 2001.
Sweeny, "IBM, Motorola Join To Offer Mobile Data," Communications Week, vol. 286, pp. 2, 84, Feb. 5, 1990.
Takats et al., "A Network Management Architecture For Satellite Based Personal Communications," IEEE—ICUPC '92 Proceedings, pp. 395–401, Sep. 29, 1992–Oct. 2, 1992.

Tan et al., "A Fast Handoff Scheme For Wireless Networks," Proceedings Of The 2nd ACM International Workshop On Wireless Mobile Multimedia (Seattle, WA), 1999.
Tan et al., "Mobicast: A Multicast Scheme For Wireless Networks," Mobile Networks And Applications 5, pp. 259–271, 2000.
Tanno et al., "Multiplexing Of Communication Ports On Unix Terminals For Packet Radio Networks," IEEE—ICUPC '92 Proceedings, pp. 417–420, Sep. 29, 1992–Oct. 2, 1992.
Technical Manual Callmaster/Smart MT–270, 1982.
Thorborg et al., "Mobimed—A Telemedicine System For Mobile Monitoring Of Physiological Parameters," SPIE, vol. 1355, Telecommunication For Health Care: Telemetry, Teleradiology, And Telemedicine 1990, Proceedings Of IEEE Western Canada Conference And Exhibition, pp. 32–35, Jul. 6, 1990–Jul. 7, 1990.
Todd et al., "Low Power Rendezvous In Embedded Wireless Networks," Proceedings Of The 1st ACM International Symposium on Mobile Ad Hoc Networking & Computing (Boston), Sessions D, pp. 107–118, 2000.
Todd et al., "Space And Frequency Diversity Measurements of The 1.7 GHz Indoor Radio Channel For Wireless Personal Communications," IEEE—ICUPC '92 Proceedings, pp. 87–91, Sep. 29, 1992–Oct. 2, 1992.
Toh, "A Hybrid Handover Protocol For Local Area Wireless ATM Networks," Mobile Networks And Applications 1, pp. 313–334, 1996.
Troe, "Mobile–Data Packet–Networks," Electro International Conference Record, New York, pp. 510–513, Apr. 16, 1991–Apr. 18, 1991.
Tsukamoto et al., "Mobility Management Of Transport Protocol Supporting Multiple Connections," Proceedings Of The Second International Workshop On Monthly Management & Wireless Access Protocols (Philadelphia, PA), Session 4, pp. 83–87, 2004.
Ubiquity 1000 Cellular Communications System—Technical Information, May 18, 1994.
Ubiquity 1000 Cellular Communications System For Your IBM ThinkPad™ 750, User's Guide, May 18, 1994.
Valko et al., "On The Analysis Of Cellular IP Access Networks," Sixth JFIP International Workshop On Protocols For High Speed Networks (Salem), Aug. 25, 1999–Aug. 27, 1999.
Velocci, "Orbcomm Nears Full Operational Status," Aviation Week & Space Technology, vol. 149, No. 21, pp. 46–48, Nov. 23, 1998.
Vijayan et al., "The Dynamic Behavior Of Handoff Algorithms," IEEE—ICUPC '92 Proceedings, pp. 39–43, Sep. 29, 1992–Oct. 2, 1992.
Vinton, "Cellular Market Booms, But Competition Looms," Business Communications Review, vol. 20, No. 8, p. 73–77, Aug. 1990.
Vizard, "Standards For UPT Introduction and Evolution," IEEE—ICUPC '92 Proceedings, pp. 74–78, Sep. 29, 1992–Oct. 2, 1992.
Wang et al., "On Frequency–Hop Multiple Access Sequence," IEEE—ICUPC '92 Proceedings, pp. 177–181, Sep. 29, 1992–Oct. 2, 1992.
Wang et al., "Tracking A Head–Mounted Display In A Room–Sized Environment With Head–Mounted Cameras," Proc. Of Helmet–Mounted Displays II, Orlando, FL, vol. 1290 SPIE, Apr. 19, 1990–Apr. 20, 1990.
Wang, "The Hierarchical Structure Of Tracing Strategy For Universal Personal Communication Systems," IEEE—ICUPC '92 Proceedings, pp. 242–246, Jun. 23, 1992.
Want et al., "The Active Badge Location System," ACM Transactions On Information Systems, vol. 10, No. 1, pp. 91–102, Jan. 1992.
Webb, "Voice And Data Privacy Using Chaotic Time Sequences," IEEE—ICUPC '92 Proceedings, pp. 33–38, Sep. 29, 1992–Oct. 2, 1992.
Wilber–Ham et al., "Universal Personal Telecommunication (UPT) Service And Architecture Overview," IEEE—ICUPC '92 Proceedings, pp. 64–68, Sep. 29, 1992–Oct. 2, 1992.
Williams, "It's Telecom All The Way For A Rejuvenated Ericsson (LM Ericsson of Sweden Sticks To Telecommunications Business)," Electronic Business Buyer, Jul. 10, 1989.
Wilson et al., "CDMA Versus Dynamic TDMA For Access Controls In An Integrated Voice/Data PCN," IEEE—ICUPC '92 Proceedings, pp. 267–272, Sep. 29, 1992–Oct. 2, 1992.
Winters et al., "The Capacity Of Wireless Communication Systems Can Be Substantially Increased By The Use Of Antenna Diversity," IEEE—ICUPC '92 Proceedings, pp. 28–32, Sep. 29, 1992–Oct. 2, 1992.
Wolter, "Multiplexing On The Downlink Of A TDMA–Based Radio System," IEEE—ICUPC '92 Proceedings, Sep. 29, 1992–Oct. 2, 1992, pp. 258–261.
Wolterink, "Handoff, A necessary Feature In Wireless Office Systems," IEEE—ICUPC '92 Proceedings, pp. 368–374, Sep. 29, 1992–Oct. 2, 1992.
Woolnough, "Ericsson Pushes Mobile Data Standard," Electronic Engineering Times, vol. 520, p. 18, Jan. 9, 1989.
Woolnough, "Finnish Farm Has Mixed Results Building Through Acquisitions: Nokia Finds Fast Track Has Its Bumps," Electronic Engineering Times, vol. 614, pp. 85–86, Oct. 29, 1990.
Wu et al., "AMRIS: A Multicast Protocol For Ad Hoc Wireless Networks," Proceedings of IEEE MILCOMM '99 (Atlantic City, NJ), pp. 1–5, 1999.
Yamagishi et al., "A Low–Voltage 6–GHZ–Band CMOS Monolithic LC–Tank VCO Using A Tuning–Range Switching Technique," IEEE MTT–S Digest, pp. 735–738, 2000.
Yu, "IS–41 For Mobility Management," IEEE—ICUPC '92 Proceedings, pp. 158–162, Sep. 29, 1992–Oct. 2, 1992.
Lin et al., "A 900 MHz, 2.5mA CMOS Frequency Synthesizer With An Automated SC Tuning Loop," Custom Integrated Circuits Conference, 2000 CICC. Proceedings of the IEEE 2000, pp. 375, 378.
Ginsburg, "A 1.6–3.2 GHz, High Phase Accuracy Quadrature Phase Locked Loop," Masters Thesis, Department Of Electrical Engineering And Computer Science, Mass. Inst. Of Technology, Jun. 2003.
Digital And Ericsson Agree On Data Network Project, Wall Street Journal, p. B4, Oct. 8, 1991.
"Ericsson And General Electric Going Mobile," Telephone Engineer & Management News, pp. 30–39, Oct. 1, 1989.
"Messenger User Guide," Cognito Limited, Apr. 1991.
"Mobilt Datanät om två år" (Mobile Datanet In Two Years), Elteknik Med. Ektuell Electronik, V. 5, p. 6, 1985.
"Radio Networks–An Air Bridge For Data," 1989.
"Standards: Ericsson," Communications International 1991, p. 46, Sep. 1991.
"The Second Overseas Radio Wave Utilization System Investigation Committee Report," Kaigai Denpa Rioy Shisutemu Chosadan Hokokusho, Dai2kai, Showa, Abstract, 1987.

"Trögt för Motitex" (Delays For Mobitex), Elteknik Med. Aktuell Elektronok, vol. 3, pp. 19–21, 1987.
"Update On Ardis–Mobitex Radio Modem Competition," Newsbyte News Network, Oct. 2, 1991.
"Waiting Time For Wireless," Computerworld, pp. 73–75, Oct. 15, 1990.
Agere v. *Broadcom Memorandum & Order,* Jul. 20, 2004, Bates Nos. BCMITC00000256573–667.
Balston, Cellular Radio Systems, 1993.
Cellular Digital Packet Data System Specification Release 1.0—Book 1, N/A, Jul. 19, 1993.
ESTI Radio Equipment And Systems (RES); Digital Equipment Cordless Telecommunications (DECT) Common Interface Part 1: Overview, ETS 300 175–1, Oct. 1, 1992.
ESTI Radio Equipment And Systems (RES); Digital Equipment Cordless Telecommunications (DECT) Common Interface Part 2: Physical Layer, ETS 300 175–2, Oct. 1, 1992.
ESTI Radio Equipment And Systems (RES); Digital Equipment Cordless Telecommunications (DECT) Common Interface Part 3: Medium Access Control Layer, ETS 300 175–3, Oct. 1, 1992.
ESTI Radio Equipment And Systems (RES); Digital Equipment Cordless Telecommunications (DECT) Common Interface Part 4: Data Link Control Layer, ETS 300 175–4, Oct. 1, 1992.
ESTI Radio Equipment And Systems (RES); Digital Equipment Cordless Telecommunications (DECT) Common Interface Part 6: Identities And Addressing, ETS 300 175–6, Oct. 1, 1992.
ESTI Radio Equipment And Systems (RES); Digital Equipment Cordless Telecommunications (DECT) Common Interface Part 7: Security Features, ETS 300 175–7, Oct. 1, 1992.
ESTI Radio Equipment And Systems (RES); Digital Equipment Cordless Telecommunications (DECT) Common Interface Part 8: Speech Coding And Transmission, ETS 300 175–8, Oct. 1, 1992.
ESTI Radio Equipment And Systems (RES); Digital Equipment Cordless Telecommunications (DECT) Common Interface Part 9: Public Access Profile, ETS 300 175–9, Oct. 1, 1992.
ETSI Handbook Guide To The Application Of The PNE Rules To The Drafting And Presentation Of ETSI Standards v 1.3, May 1990.
Fast And Scalable Handoffs For Wireless Internet Works, Proceedings Of The 2nd Annual International Conference On Mobile Computing And Networking (Rye, NY), pp. 56–66, 1996.
File History of U.S. Appl. No. 08/027,140, Bates Nos. BCMITC0000789531–664, Mar. 5, 1993.
File History of U.S. Appl. No. 08/101,254, Bates Nos. BCMITC0000793836–978, Aug. 3, 1993.
File History of U.S. Appl. No. 08/114,872, Bates Nos. QBB220620–1242, Aug. 31, 1993.
File History of U.S. Appl. No. 08/431,077, Bates Nos. BCMITC0000795734–862, Apr. 27, 1995.
File History of U.S. Appl. No. 08/487,609, Bates Nos. BCMITC0000792166–658, Jun. 7, 1995.
File History of U.S. Appl. No. 08/513,645, ('983 file history), Bates Nos. BCMITC000071666–72400, Aug. 11, 1995.
File History of U.S. Appl. No. 09/060,287, ('311 file history), Bates Nos. BCMITC000071327–71665, Apr. 14, 1998.
Henderson, "Public Data Networks: The Mobitex System," Paper Presented At The IEEE Vehicle Navigation And Information Systems Conference (VNIS '89), pp. 365, 1989.
Noll, "Introduction To Telephones And Telephone Systems," 3rd Edition, 1998.
Rubbermark, Generic Design Specification Jane Pocket Telephones, Dec. 22, 1992, Bates No. E 00 0745C–0778C.
Katarina Standard Cell Specification, Aug. 12, 1992, Bates No. E 00 0087C–0242C.
Katie Gate Array Specification, Jan. 24, 1992, Bates No. E 00 1498C–1620C.
Noll, "Landmobile And Marine Radio Technical Handbook," 1985.
Lee, Mobile Cellular Telecommunications Systems, 1989, Bates Nos. QBB147008–463.
List of Change Request Presented To SMH Plenary No. 6, Rev 1, SMG 305/93, Mar. 29, 1993.
Lycksell, "Mobitex, ett kommunikations–radionät för text, data och tal" (A Radio Communication Network For Text, Data And Speech), 1986.
Walker, Mobile Information Systems, 1990.
Mobile Radio Interface Layer 3 Specification; Core Network Protocols; Stage 3, ETSI TS 124008 v. 5.3.0, 2002.
Mobile Station—Land Station Compatibility Specification, EIA/TIA–553, Sep. 1, 1989.
Mobitex Operators Association, "Mobitex Terminal Specification To Be Used With Cantle Mobitex Radio Network Issue R1A 8000 bps," Feb. 23, 1990.
Mouly, The GSM System For Mobile Communications, 1992.
Mobitex Operators Association, "Addendum Battery–Saving Protocol for Portable Terminals," Aug. 17, 1990.
Radio Data Link Access Procedure published by Motorola, Mar. 1991.
Radio Equipment And Systems (RES); Digital ESTI Radio Equipment And Systems (RES); Digital Equipment Telecommunications (DECT) Common Interface Part 5: Network Layer, ETS 300 175–5, Oct. 1, 1992.
Rothblatt, Radiodetermination Satellite Services And Standards, 1987.
Recommended Minimum Performance Standards For 800 MHz Dual mode Mobile Stations, EIA/TIA/IS–55, Dec. 1, 1991, Bates Nos. QBB149924–150025.
Robert Meier Deposition Transcript, Nov. 18, 2005.
Smart RF Wireless Data Microtransmitter AT86RF401, 1998.
SMH Meeting Report, Doc 255/92, Mar. 30, 1992.
Stemm, "Vertical Handoffs In Wireless Overlay Networks," Mobile Networks And Applications 3, Abstract, 1998.
Steven Koenck Deposition Transcript, Nov. 15, 2005.
Sweden, Telecommunications (International Edition), vol. 25, No. 10, pp. 145–148, 1991.
Technical Manual Callmaster IMTS Series: MT–200 & MT–300, 1982.
TIA–856 Spec., a High Rate Packet Data Air Interface Spec., Apr. 2004.
Ericsson—Company Report: Svenska International PLC, Investext Report No. 1152645, p. 2 of 2, Nov. 15, 1991.
Joifaei et al., "Concept Of On–Board–Processing Satellites," IEEE—ICUPC '92 Proceedings, pp. 391–394, Sep. 29, 1992–Oct. 2, 1992.

Seshadri et al., "Coded Modulation With Time Diversity, Unequal Error Protection, And Low Delay For The Rayleigh Fading Channel," IEEE—ICUPC '92 Proceedings, pp. 283–287, Sep. 29, 1992–Oct. 2, 1992.

Slimane et al., "Coded Quadrature Pulse–Overlapping Modulation Techniques For Personal Communications," IEEE—ICUPC '92 Proceedings, pp. 293–297, Sep. 29, 1992–Oct. 2, 1992.

Wang, "Coded BER Performance In A Correlative Fading Channel," IEEE—ICUPC '92 Proceedings, pp. 126–130, Sep. 29, 1992–Oct. 2, 1992.

"Ericsson Wins Mobile Data Pact," Communications Week International, No. 21, p. 13, Jun. 26, 1989.

Rohl, A Short Look on Power Saving Mechanisms in the Wireless LAN Standard Draft IEEE Standard 802.11, Jun. 26, 1997, Bates No. QBB218363–368.

Mobitex System Description MTS02.1, Feb. 19, 1990.

Mobitex Network Layer for Terminals Appendix B MTS09A.2, Feb. 19, 1990.

Calhoun, Wireless Access and the Local Telephone Network, 1992.

Yu, "Overview of EIA/TIA IS–41," IEEE 1992, pp. 220–224, 1992.

Kishine et al., "A 2.5 Gb/s Clock And Data Recovery IC With Tunable Jitter Characteristics For Use In LAN's And WAN's," IEEE J.of Solid–State Circuits, vol. 34, No. 6, pp. 805–812, Jun. 1999.

Kral et al., "RF–CMOS Oscillators With Switched Tuning," Custom IC Conference, Santa Clara, CA, pp. 555–558, May 1998.

Kral, "A 2.4 GHz CMOS Frequency Synthesizer," UCLA Integrated Circuits And Systems Laboratory, Mar. 1998.

Lo, "A 1.5–V 900–MHz Monolothic CMOS Fast–Switching Frequency Synthesizer For Wireless Applications," Symposium on VLSI Circuits of Technical Papers, p. 238–241, 2000.

Alvarez, A Wide–Bandwidth Low–Voltage PLL for PowerPC Microprocessors, Symposium on VLSI Circuits Digest of Technical Papers, 1994.

EX PARTE REEXAMINATION CERTIFICATE ISSUED UNDER 35 U.S.C. 307

THE PATENT IS HEREBY AMENDED AS INDICATED BELOW.

Matter enclosed in heavy brackets [ ] appeared in the patent, but has been deleted and is no longer a part of the patent; matter printed in italics indicates additions made to the patent.

ONLY THOSE PARAGRAPHS OF THE SPECIFICATION AFFECTED BY AMENDMENT ARE PRINTED HEREIN.

Column 7, lines 3–8:

Typically, the RF terminal is attached to the bridge closest to the host computer. However, RF terminals are constantly listening for HELLO and polling messages from other bridges and may attach to, and then communicate with, a bridge in the table of bridges that is closer to the particular RF terminal. *Terminals may cache the addresses of neighbors in a direct route table. The direct routing table in a node is built by listening to traffic directed to other nodes. Any node may select a new path to the root whenever a better path is found. All else being equal, a node on a radio channel should always choose, as its parent, the node with the best signal strength. Rapidly moving terminals can cache a short list of alternative parents.*

In an exemplary embodiment, in any enabled state, all nodes, except the root, maintain two lists: an in-range list and an out-of-range list. An entry in the in-range list contains the network address of a bridge node which was the source of a HELLO packet, the port used to communicate with the bridge node, an aging factor, and path cost information. Each entry in the in-range list is aged so that it is discarded if no HELLO packet is received from the associated bridge within HELLO_TIMEOUT seconds. The aging factor for an entry in the in-range list is reset to zero whenever a HELLO packet is received. The aging factor for the entry of the parent node is reset to zero whenever any packet is received from the parent. In-range entries are classified as OLD after two HELLO periods pass without receiving a HELLO packet from the bridge specified in the entry.

An entry in the out-of-range list contains the network address of a bridge node, the port used to communicate with the bridge, and an aging factor. The out-of-range list is used to remember failed paths when a node is attempting to attach to the network. Entries in the list are aged to indicate how long entries have been in the list. Out-of-range entries are classified as OLD after two HELLO periods in the list. Out-of-range entries are classified as AGED after OOR_TIME seconds in the list. AGED entries which are also in the in-range list are not selected as a potential parent node unless no other in-range entries are available. AGED entries are discarded after OOR_AGED_TIME seconds have passed.

AS A RESULT OF REEXAMINATION, IT HAS BEEN DETERMINED THAT:

Claims **1** and **16** are determined to be patentable as amended.

Claims **2–5**, **7**, **8**, **13**, **14** and **17–19**, dependent on an amended claim, are determined to be patentable.

New claims **32–67** are added and determined to be patentable.

Claims **6**, **9–12**, **15** and **20–31** were not reexamined.

1. A communication network supporting wireless communication of messages, said communication network comprising:

a first terminal node having a wireless receiver operable in a normal state;

a second terminal node having a wireless receiver operable in a power saving state, *wherein the time to transition out of the power saving state is calculated based on a seed value;*

where the second terminal node is capable of receiving messages in a spread spectrum transmission and the second terminal node builds and stores a list of access points that are in communication range of the second terminal node;

an access point that attempts to immediately deliver messages destined for the first terminal node;

the access point attempts to deliver messages destined for the second terminal node by transmitting at predetermined intervals beacons that identify that a message awaits delivery;

the second terminal node synchronizes operation of its wireless receiver to receive the beacons from the access point; and

the second terminal node determines from the received beacons that it has a message awaiting delivery and directs further operation of its wireless receiver to receive the message.

16. A communication network supporting wireless communication of messages, said communication network comprising:

a first terminal node operating in a first state;

a second terminal node operating in a second state in which attempts are made to minimize power consumption by the wireless receiver, *wherein a time to transition out of the second state is calculated based on a seed value;*

where the second terminal node is capable of receiving messages in a spread spectrum transmission and the second terminal node builds and stores a list of access points that are in communication range of the second terminal node;

a bridging node having a wireless transceiver to support wireless communication to the first and second terminal nodes;

the bridging node attempts to deliver messages destined for the second terminal node by transmitting at predetermined intervals beacons that identify a message awaiting delivery;

the second terminal node synchronizing operation of its wireless receiver to receive the beacons from the bridging node and determining from the received beacons that it has a message awaiting delivery and responding to an awaiting message by directing further operation of its wireless receiver to receive the message; and

the bridging node delivering messages to the first terminal node without requiring the first terminal node to determine from the beacons that it has messages awaiting delivery.

32. A communication network supporting wireless communication of messages, said communication network comprising:

a first terminal node having a wireless receiver operable in a normal state;

a second terminal node having a wireless receiver operable in a power saving state wherein at least a portion of the wireless receiver is powered down and the second terminal node is capable of receiving messages in a spread spectrum transmission;

an access point that attempts to immediately deliver messages destined for the first terminal node;

the access point attempts to deliver messages destined for the second terminal node by transmitting at predetermined intervals beacons that identify that a message awaits delivery;

the second terminal node synchronizes operation of its wireless receiver to receive the beacons from the access point; and

the second terminal node determines from the received beacons that it has a message awaiting delivery and directs further operation of its wireless receiver to receive the message.

33. The communication network of claim 32 wherein the wireless receiver of the second terminal is powered down in the power saving state.

34. The communication network of claim 32 wherein the second terminal node transitions out of the power saving state to receive a beacon in response to an interrupt.

35. The communication network of claim 34 wherein the interrupt is generated in response to a timer.

36. The communication network of claim 32 wherein the second terminal node is capable of receiving messages in a direct sequence spread spectrum transmission.

37. The communication network of claim 32 wherein a time to transition out of the power saving state is a calculated time.

38. The communication network of claim 37 wherein the time to transition out of the power saving state is calculated based on a seed value.

39. The communication network of claim 32 wherein the second terminal node builds and stores a list of access points that are in communication range of the second terminal node.

40. The communication network of claim 39 wherein the second terminal node builds and stores a list of access points that are in communication range based at least in part on the strength of a signal received from an access point.

41. A communication network supporting wireless communication of messages, said communication network comprising:

a first terminal node having a wireless receiver operable in a normal state;

a second terminal node having a wireless receiver operable in a power saving state, the second terminal node transitioning out of the power saving state at a time that is calculated by the second terminal node;

an access point that attempts to immediately deliver messages destined for the first terminal node;

the access point attempts to deliver messages destined for the second terminal node by transmitting at predetermined intervals beacons that identify that a message awaits delivery;

the second terminal node synchronizes operation of its wireless receiver to receive the beacons from the access point; and

the second terminal node determines from the received beacons that it has a message awaiting delivery and directs further operation of its wireless receiver to receive the message.

42. The communication network of claim 41 wherein the time to transition out of the power saving state is calculated based on a seed value.

43. The communication network of claim 41 wherein the second terminal generates an interrupt at the expiration of the time to transition out of the power saving state.

44. A communication network supporting wireless communication of messages, said communication network comprising:

a first terminal node having a wireless receiver operable in a normal state;

a second terminal node having a wireless receiver operable in a power saving state;

an access point that attempts to immediately deliver messages destined for the first terminal node;

the access point attempts to deliver messages destined for the second terminal node by transmitting at predetermined intervals beacons that identify that a message awaits delivery;

the second terminal node synchronizes operation of its wireless receiver to receive the beacons from the access point;

the second terminal node determines from the received beacons that it has a message awaiting delivery and directs further operation of its wireless receiver to receive the message; and

the second terminal node builds and stores a list of access points that are in communication range of the second terminal node.

45. The communication network of claim 44 wherein the second terminal node determines whether an access point is in communication range based at least in part on the strength of a signal received from the access point.

46. A communication network supporting wireless communication of messages, said communication network comprising:

a first terminal node operating in a first state;

a second terminal node operating in a second state in which attempts are made to minimize power consumption by the wireless receiver such that at least a portion of the receiver is powered down, wherein the second terminal node is capable of receiving messages in a spread spectrum transmission;

a bridging node having a wireless transceiver to support wireless communication to the first and second terminal nodes;

the bridging node attempts to deliver messages destined for the second terminal node by transmitting at predetermined intervals beacons that identify a message awaiting delivery;

the second terminal node synchronizing operation of its wireless receiver to receive the beacons from the bridging node and determining from the received beacons that it has a message awaiting delivery and responding to an awaiting message by directing further operation of its wireless receiver to receive the message; and

the bridging node delivering messages to the first terminal node without requiring the first terminal node to determine from the beacons that it has messages awaiting delivery.

47. The communication network of claim 46 wherein the wireless receiver of the second terminal is powered down in the second state.

48. The communication network of claim 46 wherein the second terminal node transitions out of the second state to receive a beacon in response to an interrupt.

49. The communication network of claim 48 wherein the interrupt is generated in response to a timer.

50. The communication network of claim 46 wherein the second terminal node is capable of receiving messages in a direct sequence spread spectrum transmission.

51. The communication network of claim 46 wherein a time to transition out of the second state is a calculated time.

52. The communication network of claim 51 wherein the time to transition out of the second state is calculated based on a seed value.

53. The communication network of claim 46 wherein the second terminal node builds and stores a list of access points that are in communication range of the second terminal node.

54. The communication network of claim 53 wherein the second terminal node builds and stores a list of access points that are in communication range based at least in part on the strength of a signal received from an access point.

55. A communication network supporting wireless communication of messages, said communication network comprising:

a first terminal node operating in a first state;

a second terminal node operating in a second state in which attempts are made to minimize power consumption by the wireless receiver;

a bridging node having a wireless transceiver to support wireless communication to the first and second terminal nodes;

the bridging node attempts to deliver messages destined for the second terminal node by transmitting at predetermined intervals beacons that identify a message awaiting delivery;

the second terminal node sychronizing operation of its wireless receiver to receive the beacons from the bridging node and determining from the received beacons that it has a message awaiting delivery and responding to an awaiting message by directing further operation of its wireless receiver to receive the message;

the bridging node delivering messages to the first terminal node without requiring the first terminal node to determine from the beacons that it has messages awaiting delivery; and

the second terminal node builds and stores a list of access points that are in communication range of the second terminal node.

56. The communication network of claim 55 wherein the second terminal node determines whether an access point is in communication range based in part on the strength of a signal received from the access point.

57. The communication network of claim 41, wherein the second terminal node operates to calculate the time to transition out of the power saving state based, at least in part, on a pseudo-random number.

58. The communication network of claim 57, wherein the second terminal node operates to calculate the pseudo-random number based, at least in part, on a previously calculated pseudo-random number associated with a beacon received in the past.

59. The communication network of claim 57, wherein the second terminal node operates to calculate the pseudo-random number based, at least in part, on node identification information.

60. The communication network of claim 44, wherein the second terminal node operates to maintain the list of access points that are in communication range by, at least in part, operating to maintain an age counter for an access point in the list.

61. The communication network of claim 60, wherein the second terminal node operates to maintain the list of access points that are in communication range by, at least in part, operating to maintain a respective age counter for each access point in the list.

62. The communication network of claim 44, wherein the second terminal node further operates to maintain a list of potential access points that are not in communication range.

63. The communication network of claim 62, wherein the second terminal node operates to maintain the list of potential access points that are not in communication range by, at least in part, operating to maintain an age counter for an access point in the list of potential access points that are not in communication range.

64. The communication network of claim 55, wherein the second terminal node operates to maintain a list of access points that are in communication range by, at least in part, operating to maintain an age counter for an access point in the list.

65. The communication network of claim 64, wherein the second terminal node operates to maintain the list of access points that are in communication range by, at least in part, operating to maintain a respective age counter for each access point in the list.

66. The communication network of claim 55, wherein the second terminal node further operates to maintain a list of potential access points that are not in communication range.

67. The communication network of claim 66, wherein the second terminal node operates to maintain the list of potential access points that are in communication range by, at least in part, operating to maintain an age counter for an access point in the list of potential access points that are not in communication range.

* * * * *