US006428172B1

(12) **United States Patent**
Hutzel et al.

(10) **Patent No.: US 6,428,172 B1**
(45) **Date of Patent: Aug. 6, 2002**

(54) **REARVIEW MIRROR ASSEMBLY WITH UTILITY FUNCTIONS**

(75) Inventors: **Barry W. Hutzel**; **Niall R. Lynam**; **Darryl P. DeWind**, all of Holland; **John O. Lindahl**, Fruitport, all of MI (US)

(73) Assignee: **Donnelly Corporation**, Holland, MI (US)

(*) Notice: Subject to any disclaimer, the term of this patent is extended or adjusted under 35 U.S.C. 154(b) by 0 days.

(21) Appl. No.: **09/449,121**

(22) Filed: **Nov. 24, 1999**

(51) **Int. Cl.**[7] **G02B 5/08**; G02F 1/15; B60Q 1/26; B60R 1/04

(52) **U.S. Cl.** **359/838**; 359/872; 359/265; 359/267; 359/273; 359/604; 362/494; 362/191; 362/486

(58) **Field of Search** 359/838, 871, 359/872, 265, 603, 604, 267, 273; 362/486, 494, 135, 140, 142, 183, 190, 191

(56) **References Cited**

U.S. PATENT DOCUMENTS

3,099,797	A	7/1963	A. Piccinini	325/312
3,543,018	A	11/1970	Barcus et al.	240/4.2
3,588,233	A *	6/1971	Lambert	
4,247,850	A	1/1981	Marcus	340/694
4,436,371	A	3/1984	Wood et al.	350/281
4,443,057	A	4/1984	Bauer et al.	350/281
4,447,808	A	5/1984	Marcus	340/696
4,524,941	A	6/1985	Wood et al.	248/544
4,646,210	A	2/1987	Skogler et al.	362/142
D289,989	S	5/1987	Skogler et al.	D12/188

(List continued on next page.)

FOREIGN PATENT DOCUMENTS

DE	2332885		1/1975
DE	3605704	A1	8/1987
EP	0381016	A1	8/1990
FR	1571768		6/1969
GB	2004418	A	3/1979
GB	2192370	A	1/1988
GB	2297632	A	8/1996
JP	58180347		10/1983
JP	3231044		10/1991
WO	WO 8202448		7/1982

OTHER PUBLICATIONS

U. S. application No. 08/918,772, filed Aug. 25, 1997, entitled Modular Rearview Mirror Assembly, pending.

U. S. application No. 09/133,343, filed Aug. 13, 1998, entitled Rearview Mirror with Lighting Assembly, pending.

U.S. application No. 09/371,871, filed Aug. 5, 1999, entitled Lighted Vehiculer Mirror Assembly, pending.

Primary Examiner—Ricky D. Shafer
(74) *Attorney, Agent, or Firm*—Van Dyke, Garnder, Linn & Burkhart, LLP

(57) **ABSTRACT**

An interior rearview mirror assembly for a vehicle includes a reflective element, a housing or casing supporting the reflective element, and the casing including a storage space. The storage space provides storage for at least one accessory and for storing the accessory in the location easily accessible by an occupant of the vehicle whereby the accessory can be inserted into and removed from the storage space for use by an occupant of the vehicle. The storage space may take the form of a recess provided in a top wall of the casing, a recessed portion provided in a front wall, back wall, or end wall of the casing. In one form, the recessed portion houses a pendent accessory which is movable between a retracted position within the recess to an extended position for viewing by an occupant of the vehicle. For example, the pendent accessory may include a reflective element or a display element, for displaying information to an occupant of the vehicle.

17 Claims, 20 Drawing Sheets

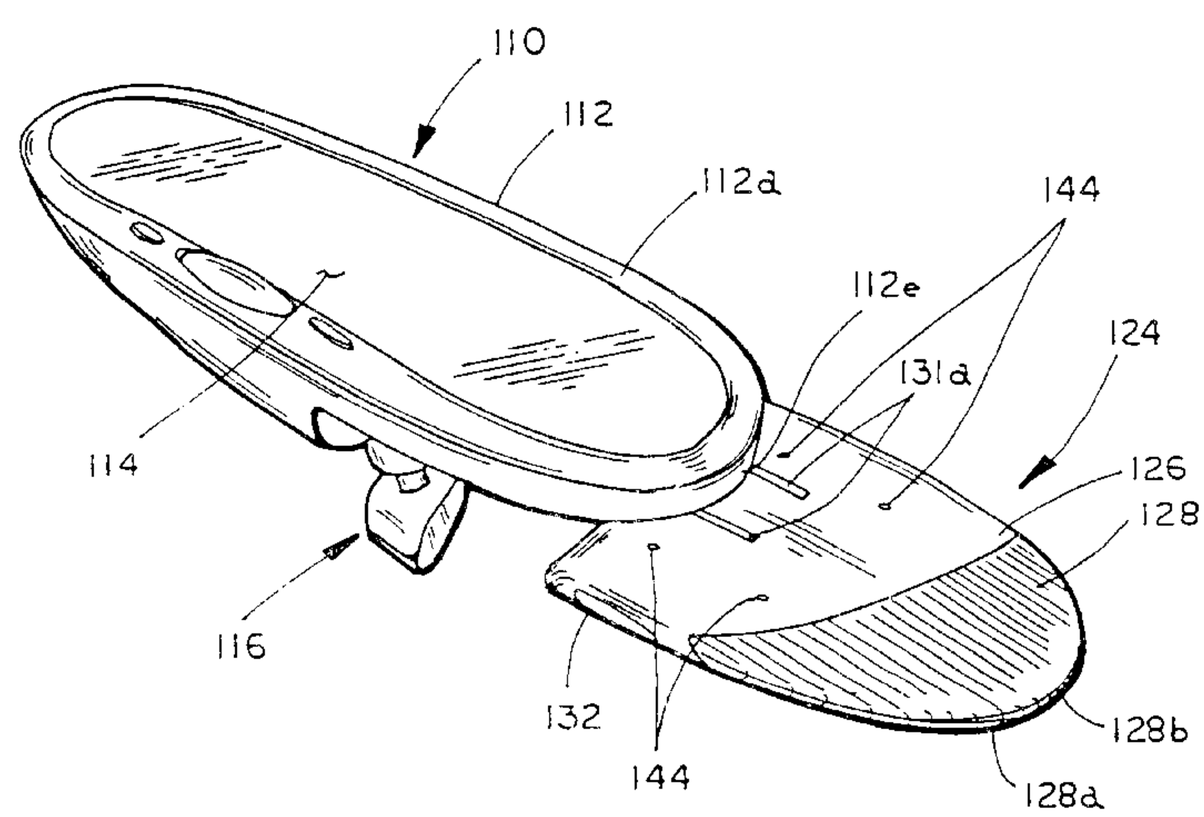

U.S. PATENT DOCUMENTS

4,733,336	A		3/1988	Skogler et al.	362/142
4,768,870	A		9/1988	Chen	350/631
D299,491	S		1/1989	Masuda	D12/188
4,807,096	A		2/1989	Skogler et al.	362/142
D304,920	S		12/1989	Schifrin	D12/188
4,974,129	A	*	11/1990	Grieb et al.	362/183
5,059,015	A	*	10/1991	Tran	359/871
5,077,643	A	*	12/1991	Leach	362/183
5,124,845	A	*	6/1992	Shimojo	359/838
5,140,455	A	*	8/1992	Varaprasad et al.	359/265
5,178,448	A		1/1993	Adams et al.	362/83.1
5,253,109	A	*	10/1993	O'Farrell et al.	359/604
5,285,060	A		2/1994	Larson et al.	250/214
D351,370	S		10/1994	Lawlor et al.	D12/187
5,479,155	A		12/1995	Zeinstra et al.	340/825.22
5,530,240	A		6/1996	Larson et al.	250/214
5,550,677	A	*	8/1996	Schofield et al.	359/604
5,566,244	A		10/1996	ul Azam et al.	379/58
5,572,354	A		11/1996	Desmond et al.	359/265
5,576,687	A		11/1996	Blank et al.	340/438
5,615,857	A		4/1997	Hook	248/549
5,649,317	A	*	7/1997	Suzuki	
5,649,756	A		7/1997	Adams et al.	362/83.1
5,669,698	A		9/1997	Veldman et al.	362/83.1
5,671,996	A		9/1997	Bos et al.	362/83.1
5,673,994	A		10/1997	Fant, Jr. et al.	362/831
5,708,410	A		1/1998	Blank et al.	340/438
D390,524	S		2/1998	DeLine et al.	D12/187
5,719,714	A	*	2/1998	Ackeret	359/871
5,812,321	A		9/1998	Schierbeek et al.	359/601
5,813,745	A		9/1998	Fant, Jr. et al.	362/83.1
5,820,245	A		10/1998	Desmond et al.	362/83.1
D400,481	S		11/1998	Stephens et al.	D12/187
5,878,353	A		3/1999	ul Azam et al.	455/550
5,938,321	A		8/1999	Bos et al.	362/494
5,940,503	A		8/1999	Palett et al.	379/454
6,000,823	A		12/1999	Desmond	362/494
6,026,162	A		2/2000	Palett et al.	379/454
6,049,271	A	*	4/2000	Chu	362/494
6,079,858	A	*	6/2000	Hicks	362/494

* cited by examiner

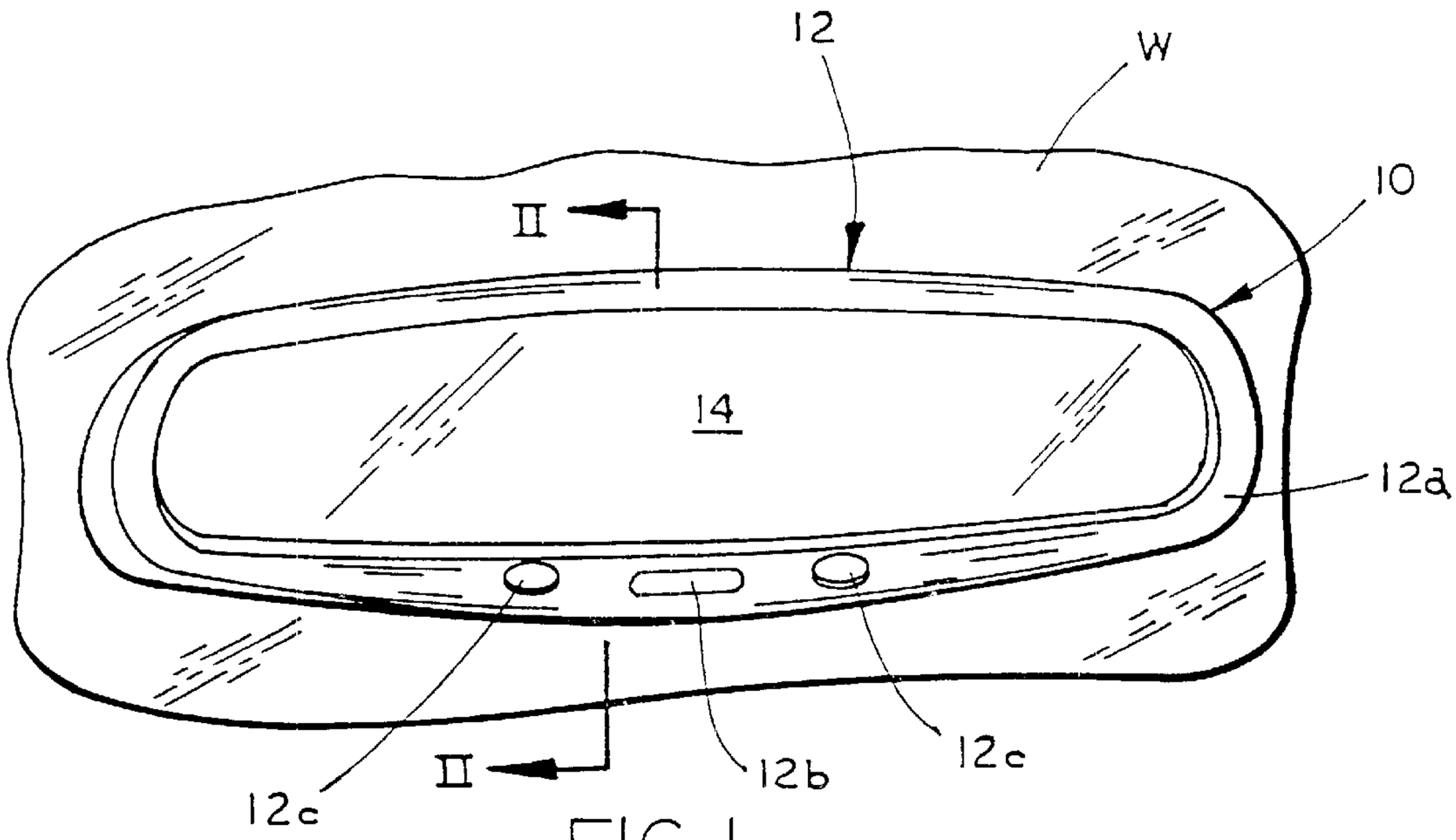
12
W
10
II
14
12a
II
12c
12b
12c

FIG. 1

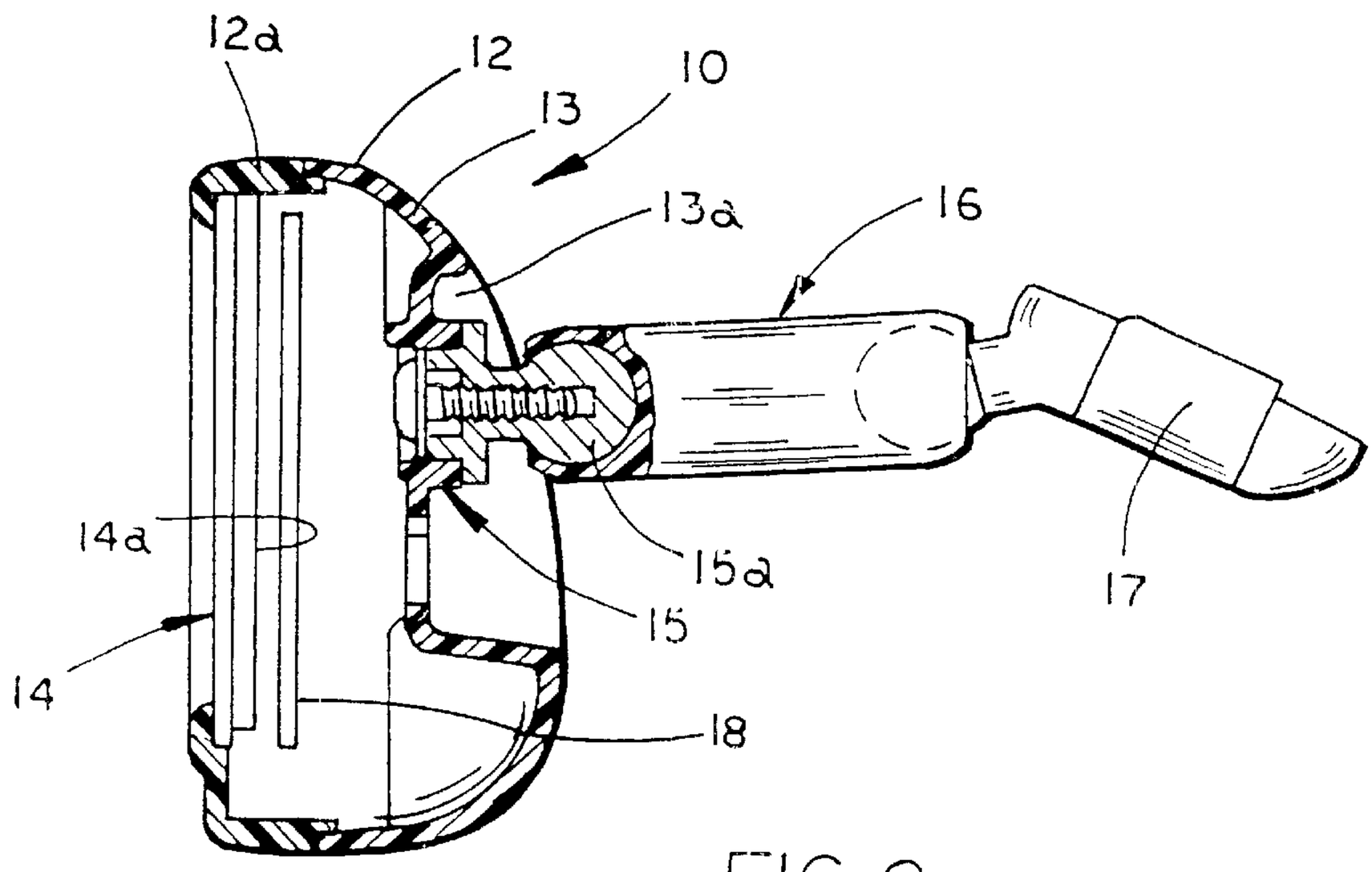
12a
12
10
13
13a
16
14a
15a
17
15
14
18

FIG. 2

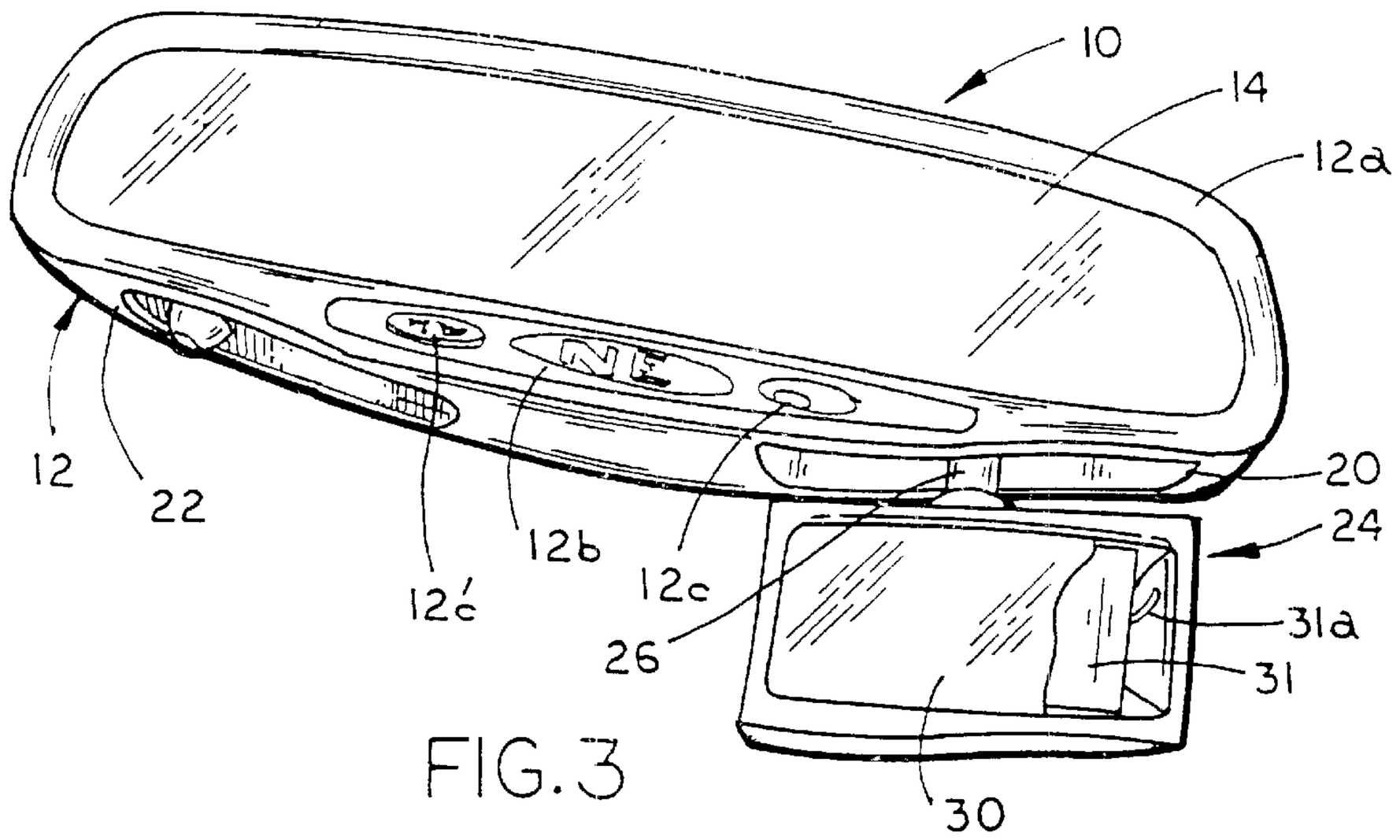
10
14
12a
12
22
12b
12c
12c'
26
20
24
31a
31
30

FIG.3

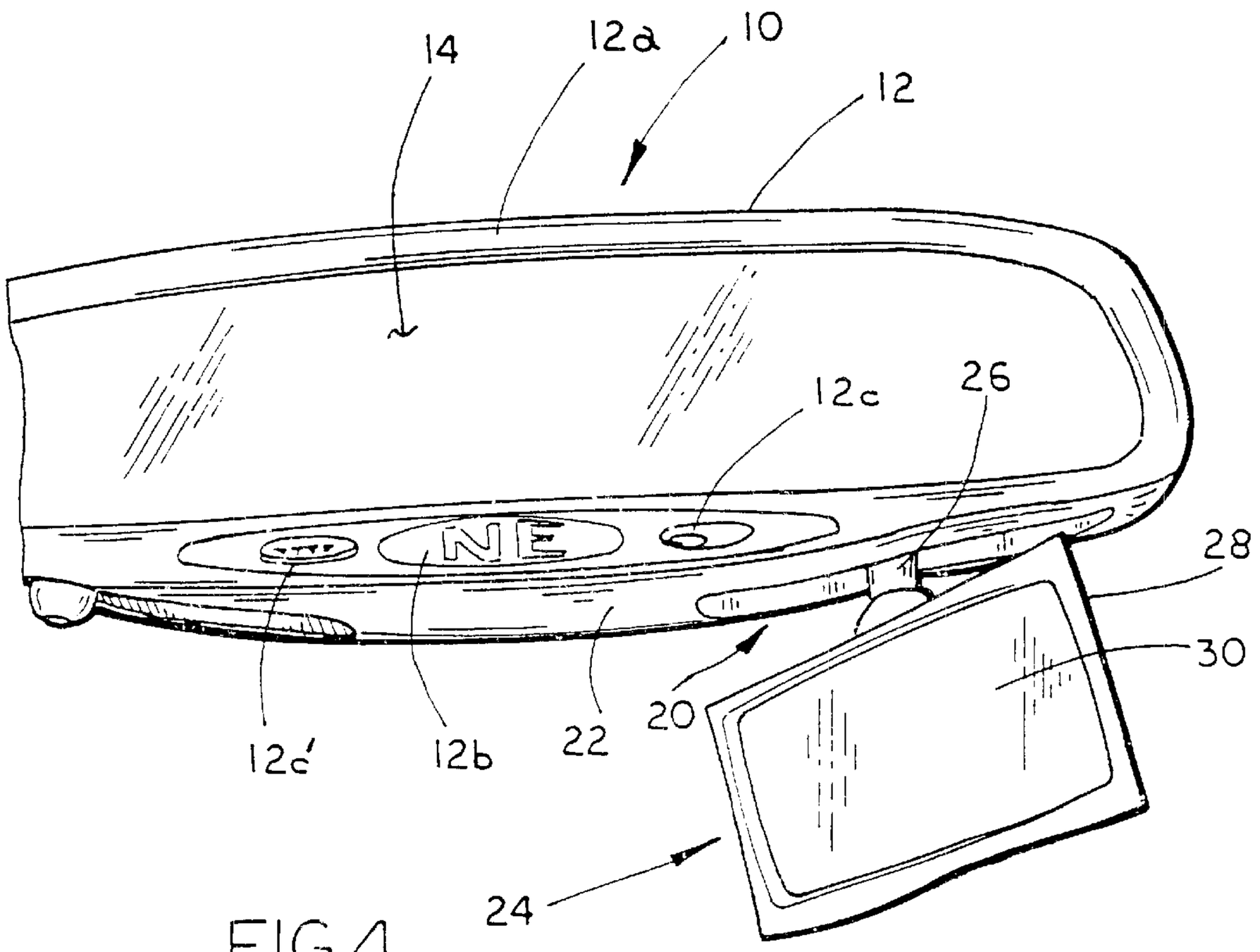
14
12a
10
12
12c
26
28
30
12c'
12b
22
20
24

FIG.4

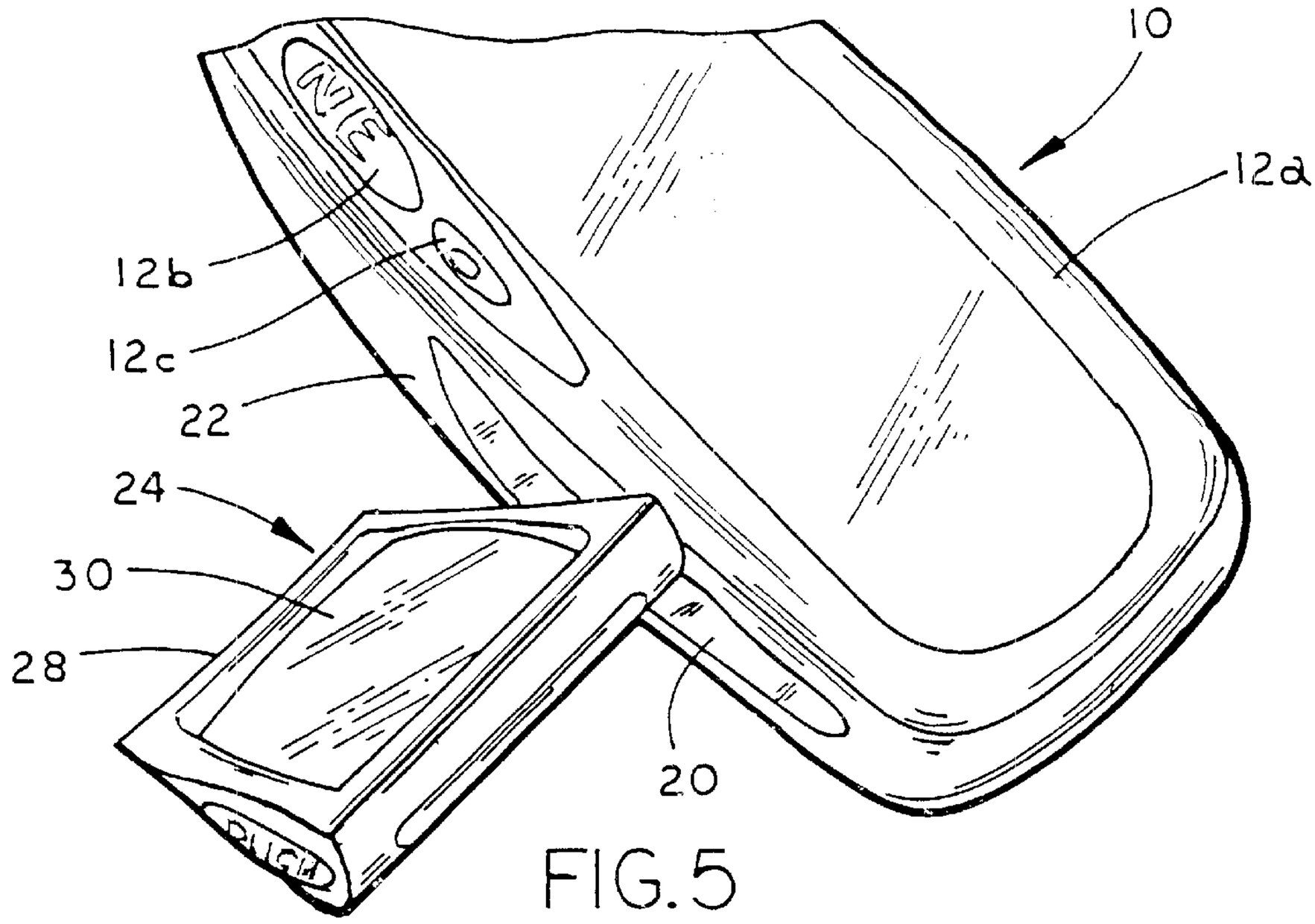

FIG.5

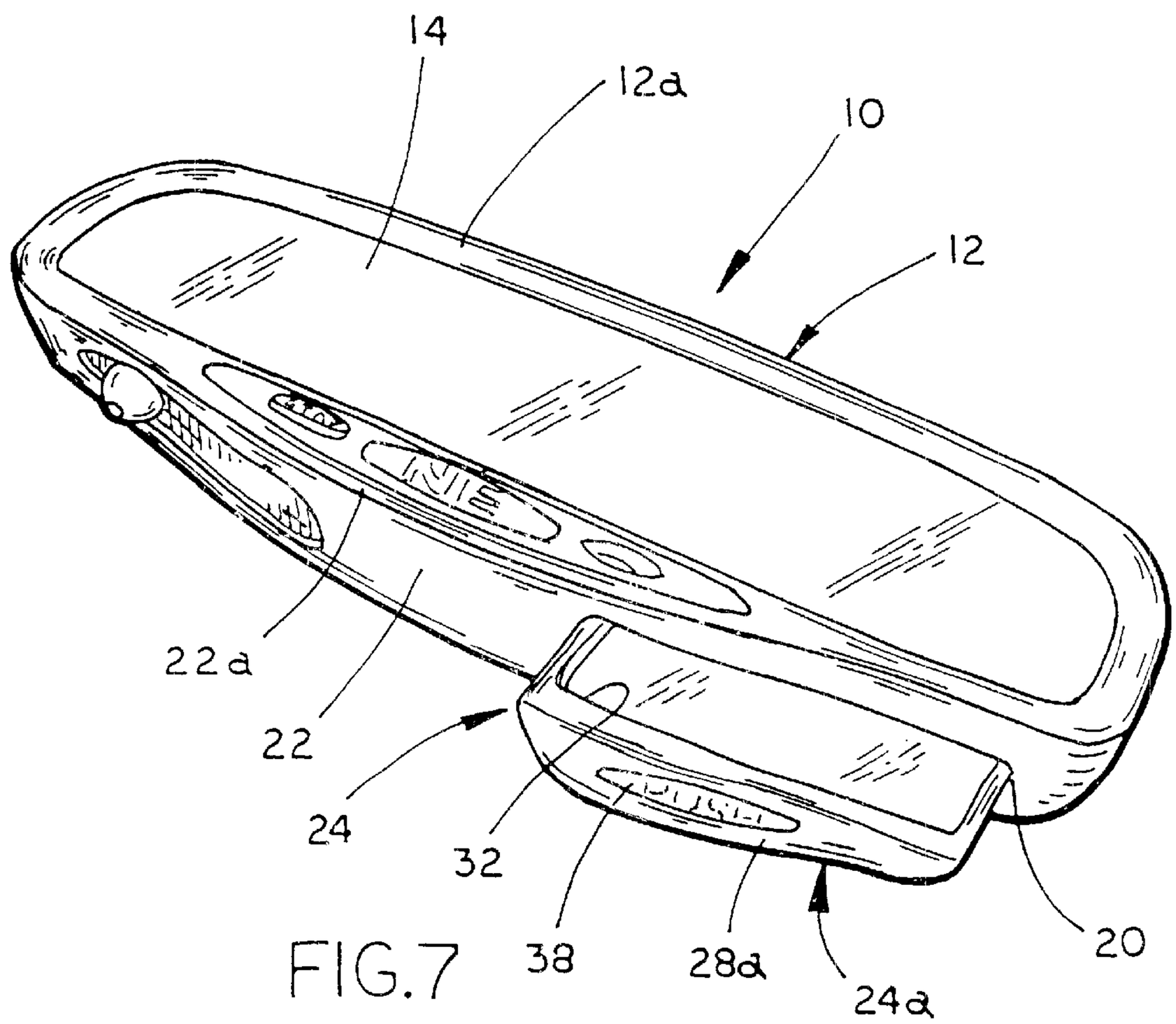

FIG.7

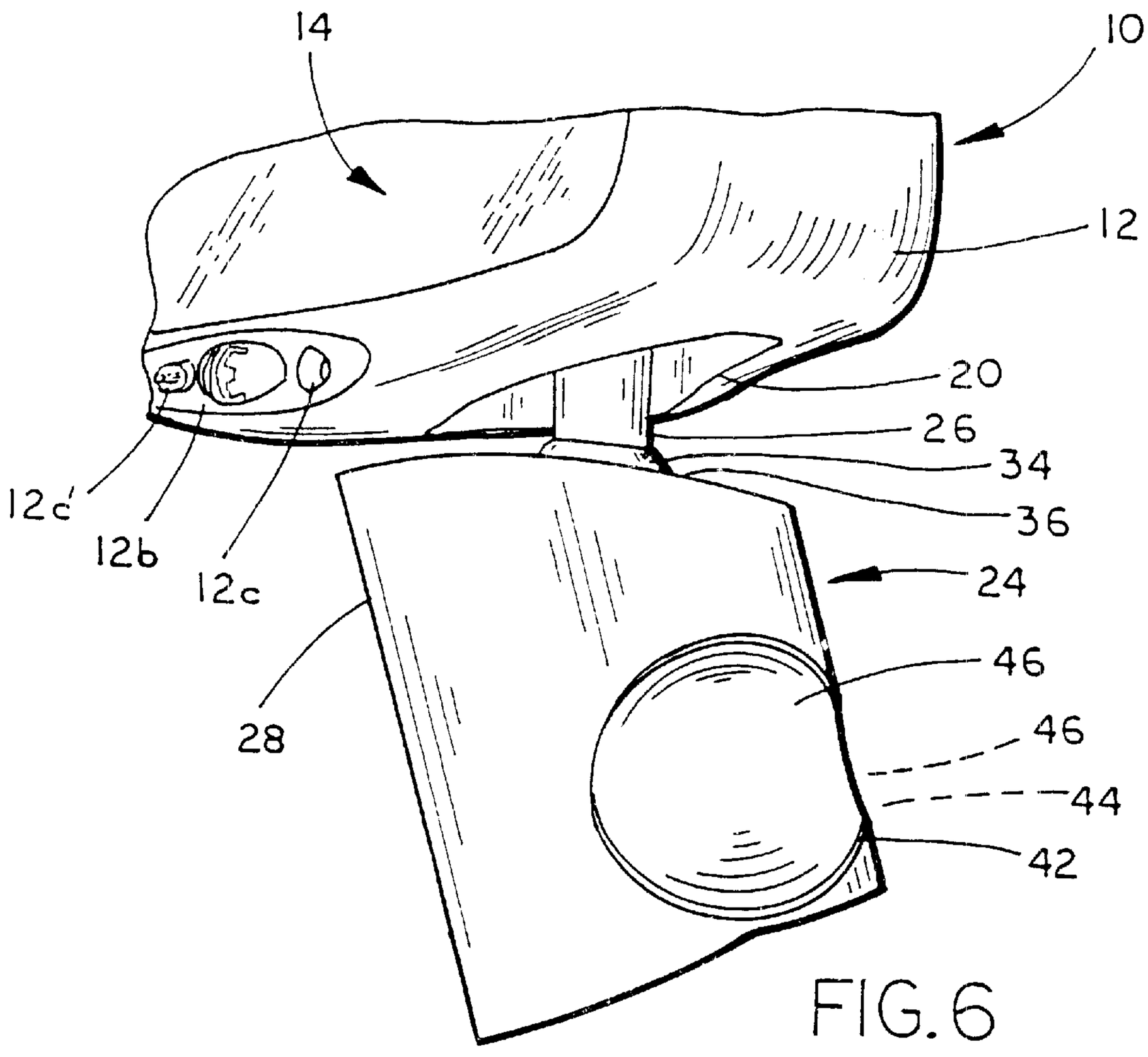

FIG. 6

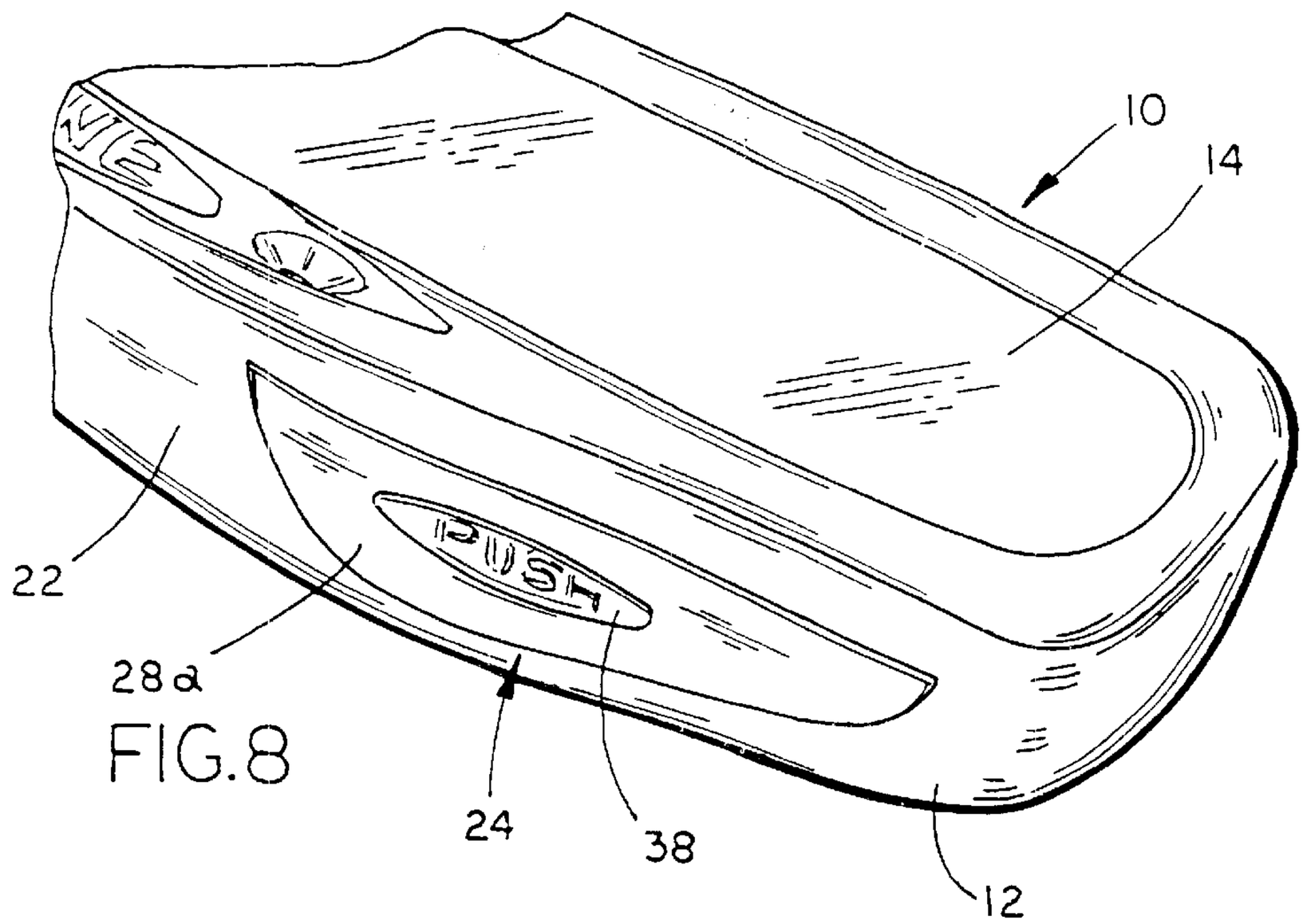
10
14
22
28a
PUSH
24
38
12

FIG.8

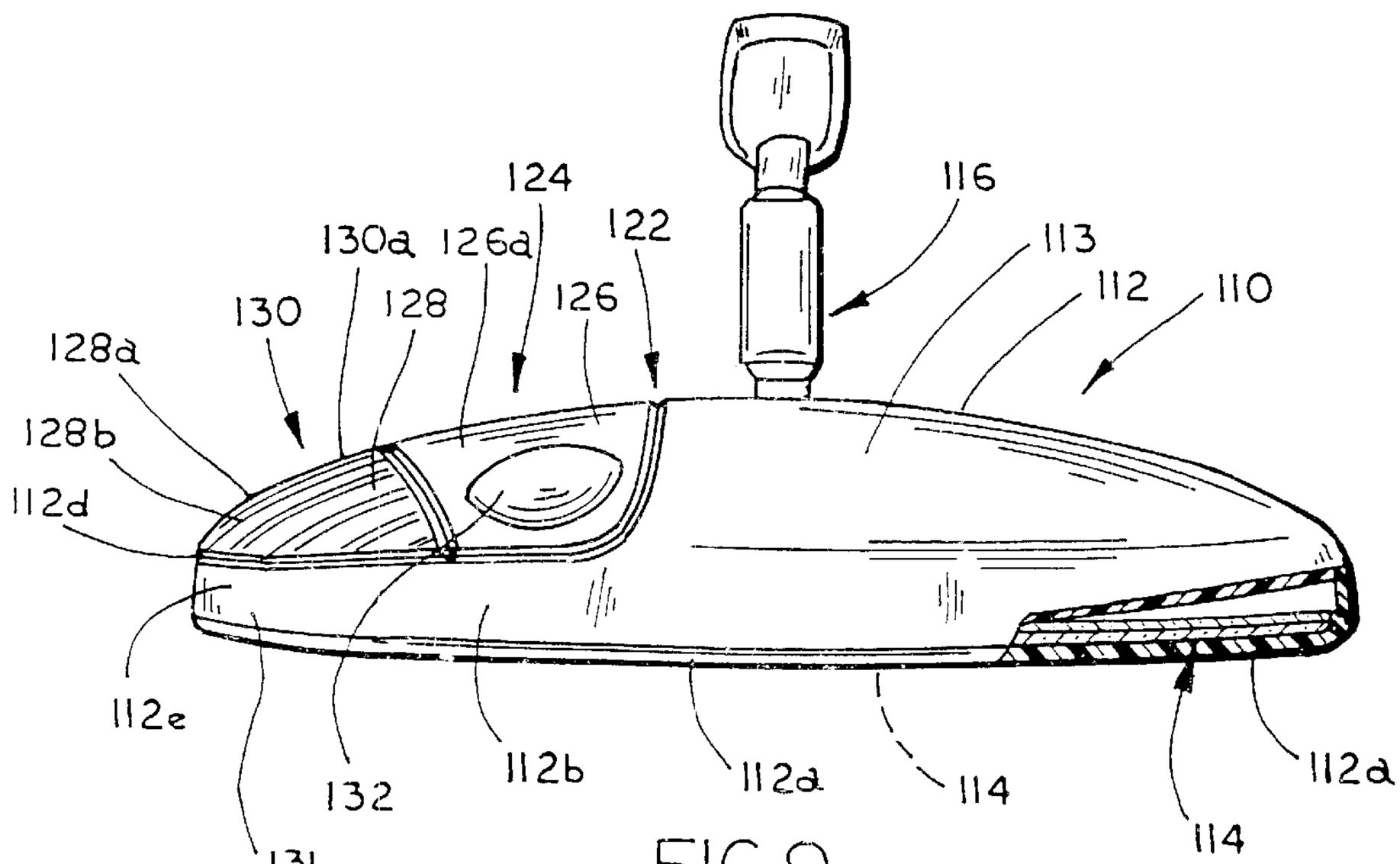
124
116
130a
126a
122
113
130
128
126
112
110
128a
128b
112d
112e
132
112b
112a
114
112a
114
131

FIG.9

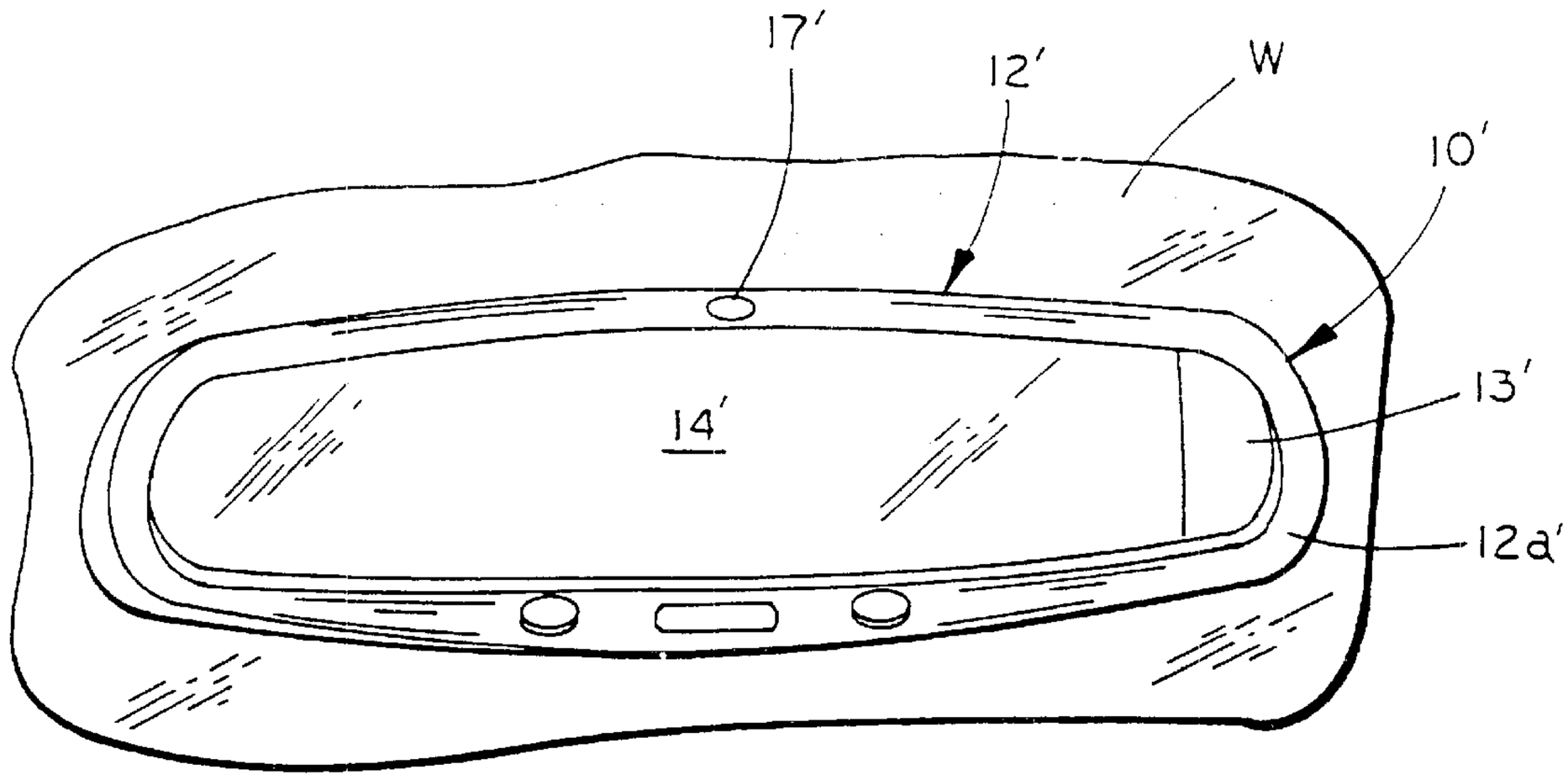

FIG.8A

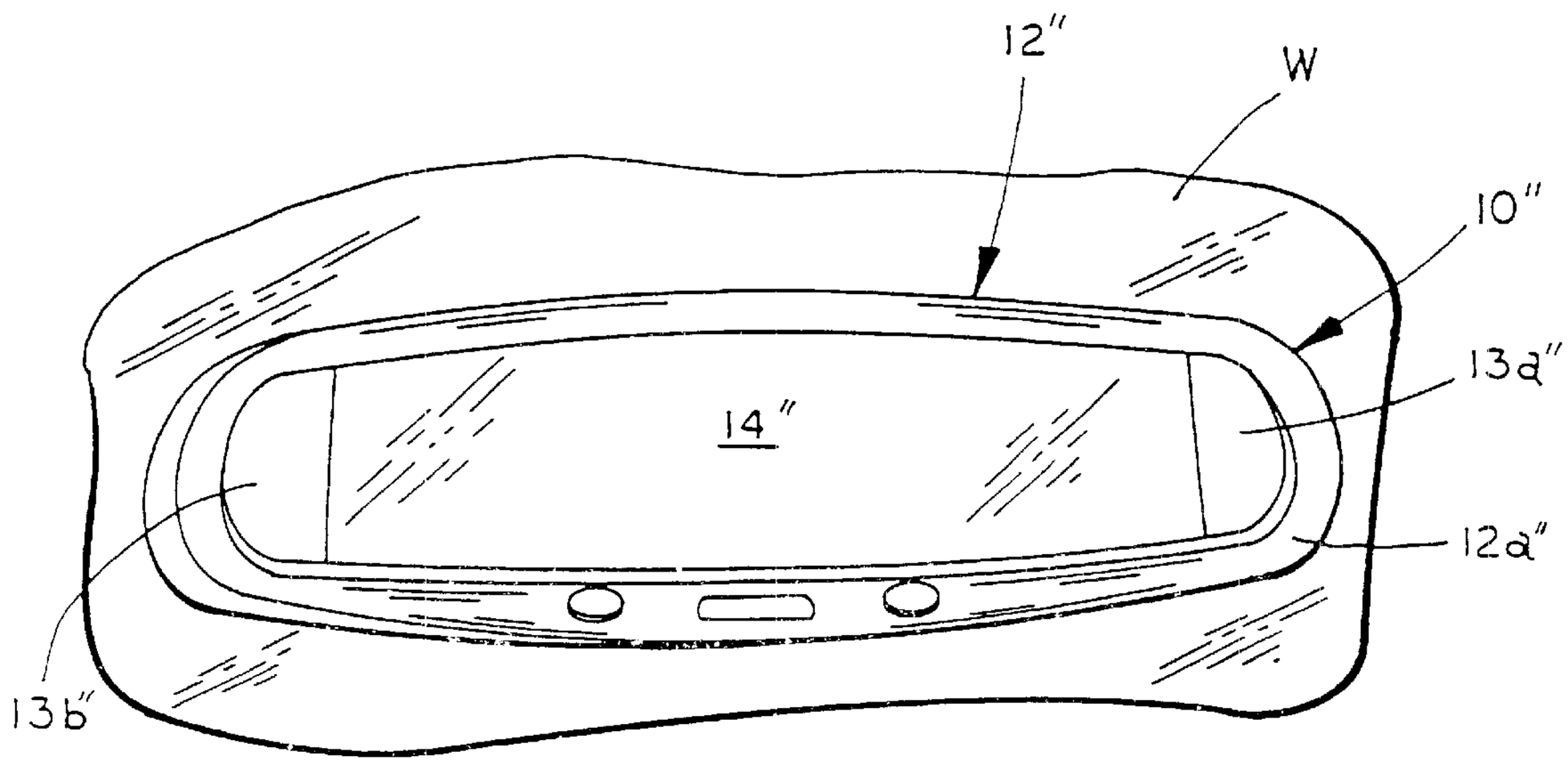

FIG.8B

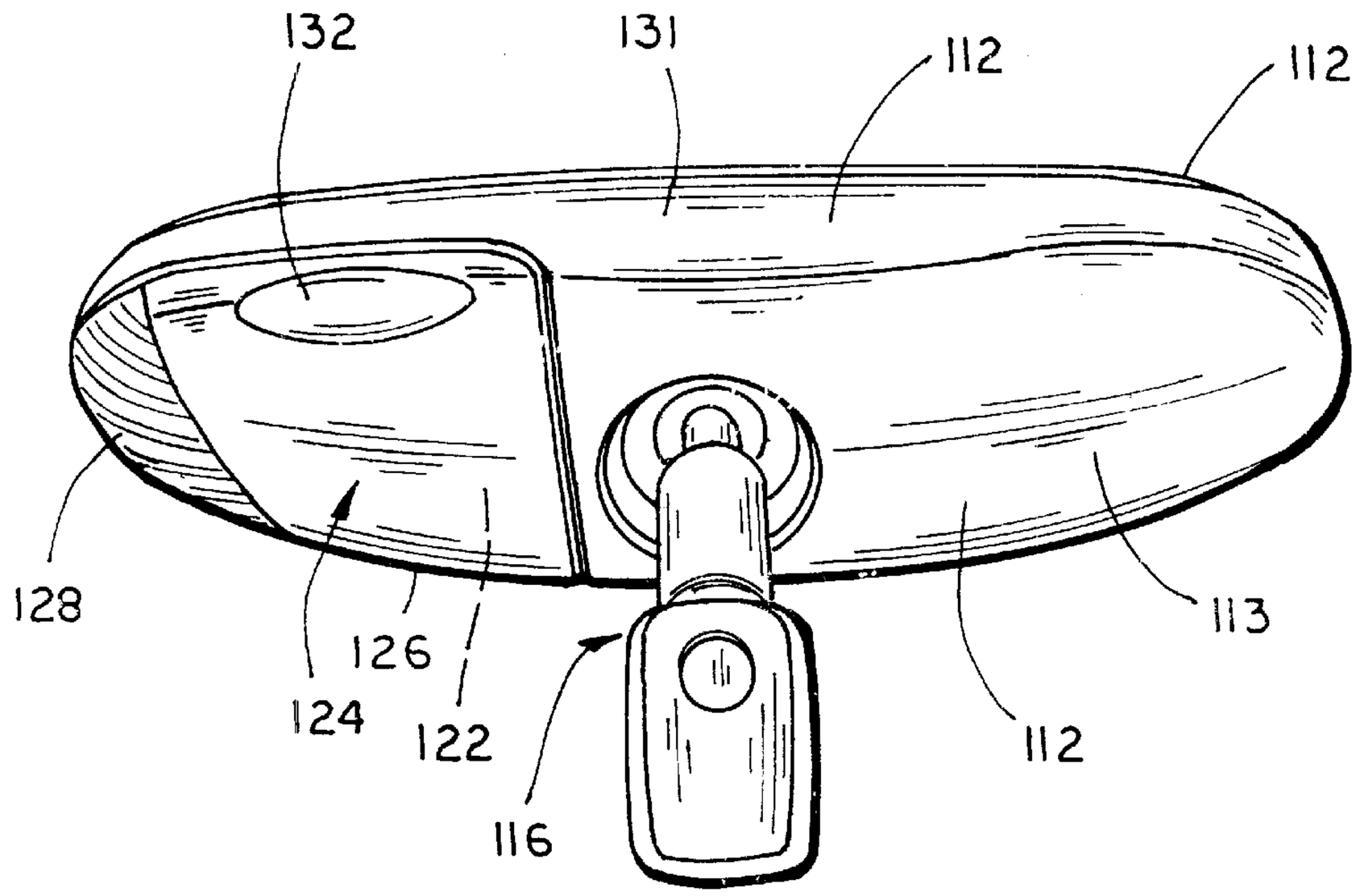
132
131
112
112
128
126
124
122
116
112
113

FIG. 10

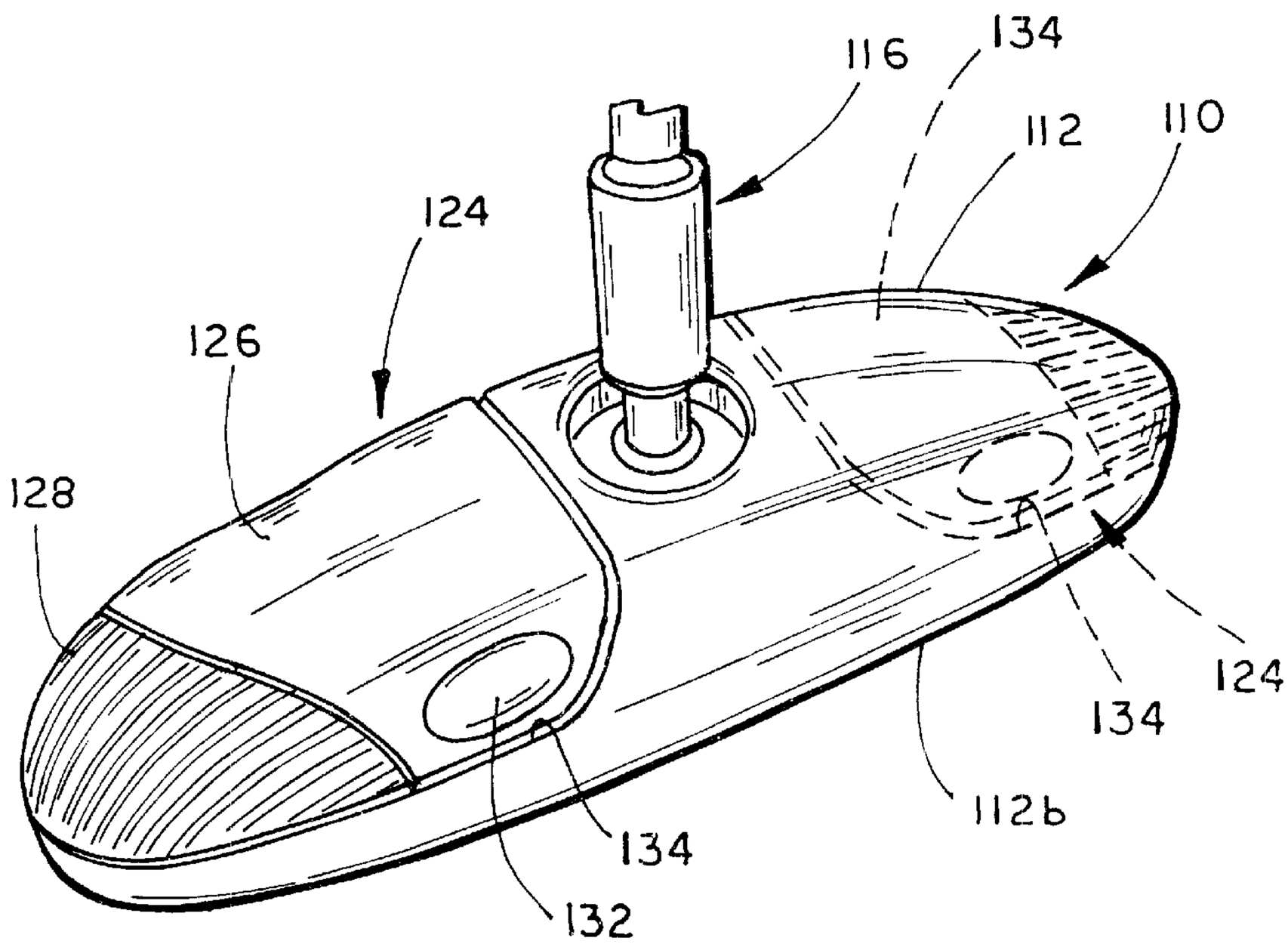
116
134
112
110
124
126
128
124
134
112b
134
132

FIG. 11

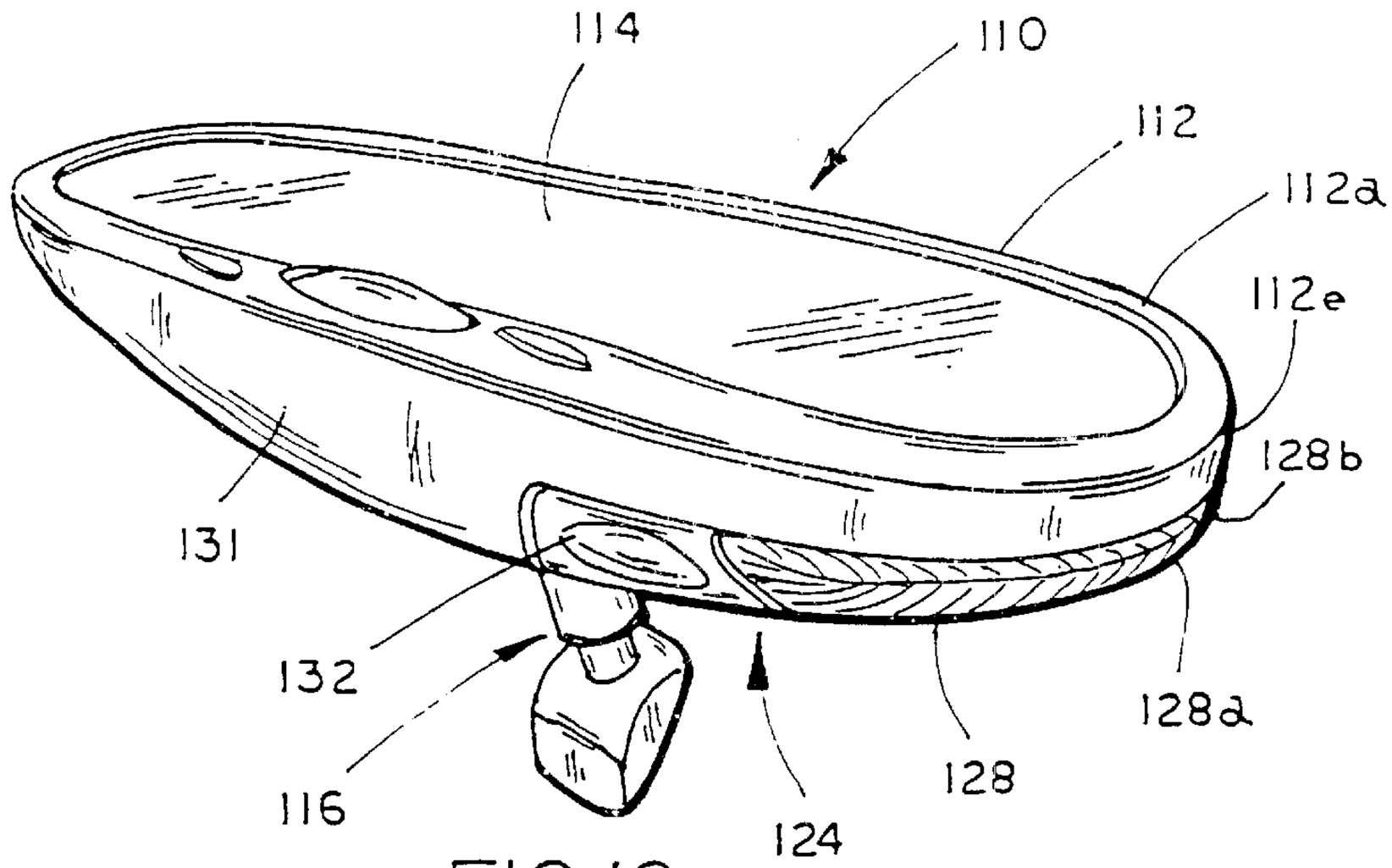
114
110
112
112a
112e
128b
131
132
116
124
128
128a

FIG.12

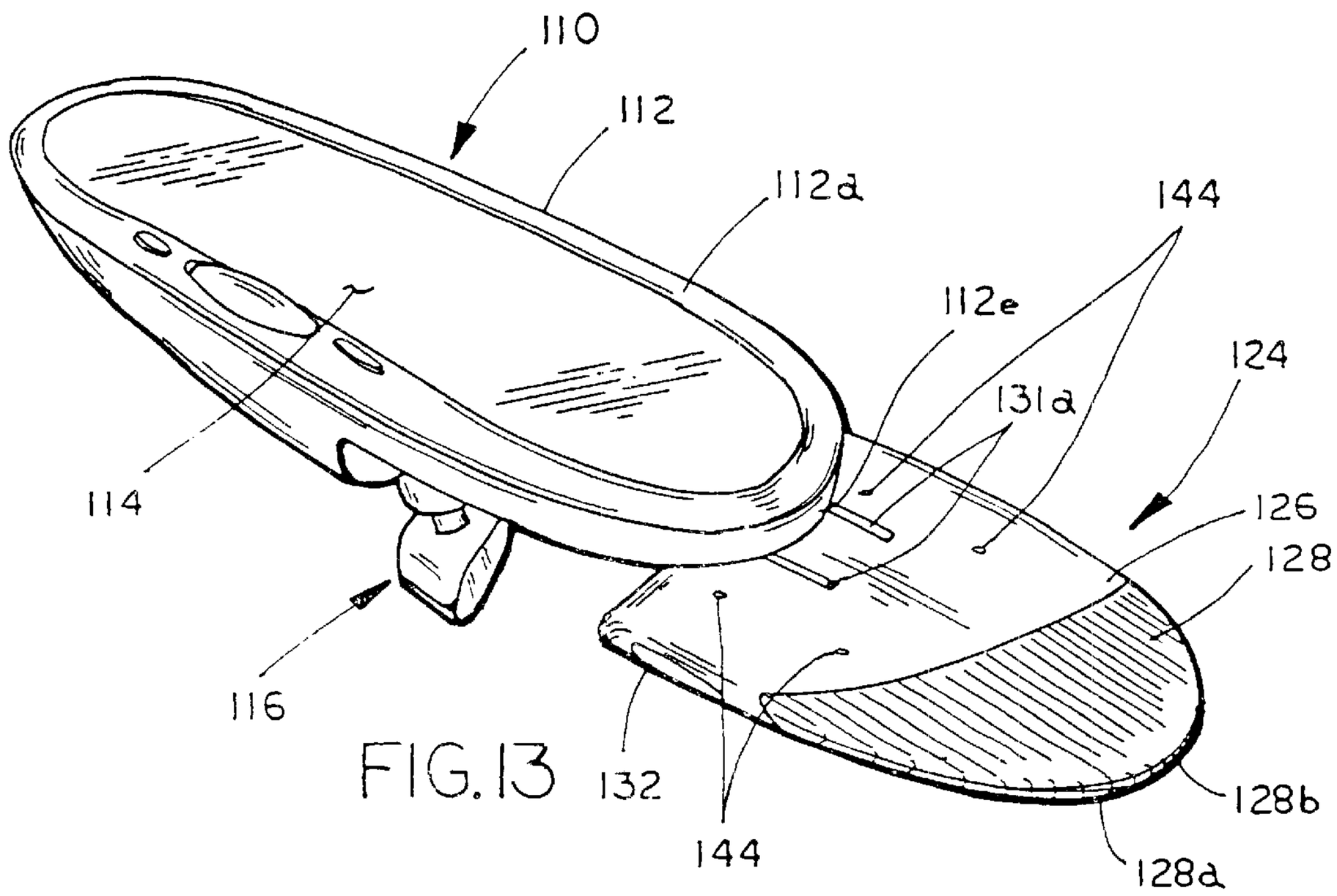
110
112
112a
144
112e
124
131a
114
126
128
116
132
144
128b
128a

FIG.13

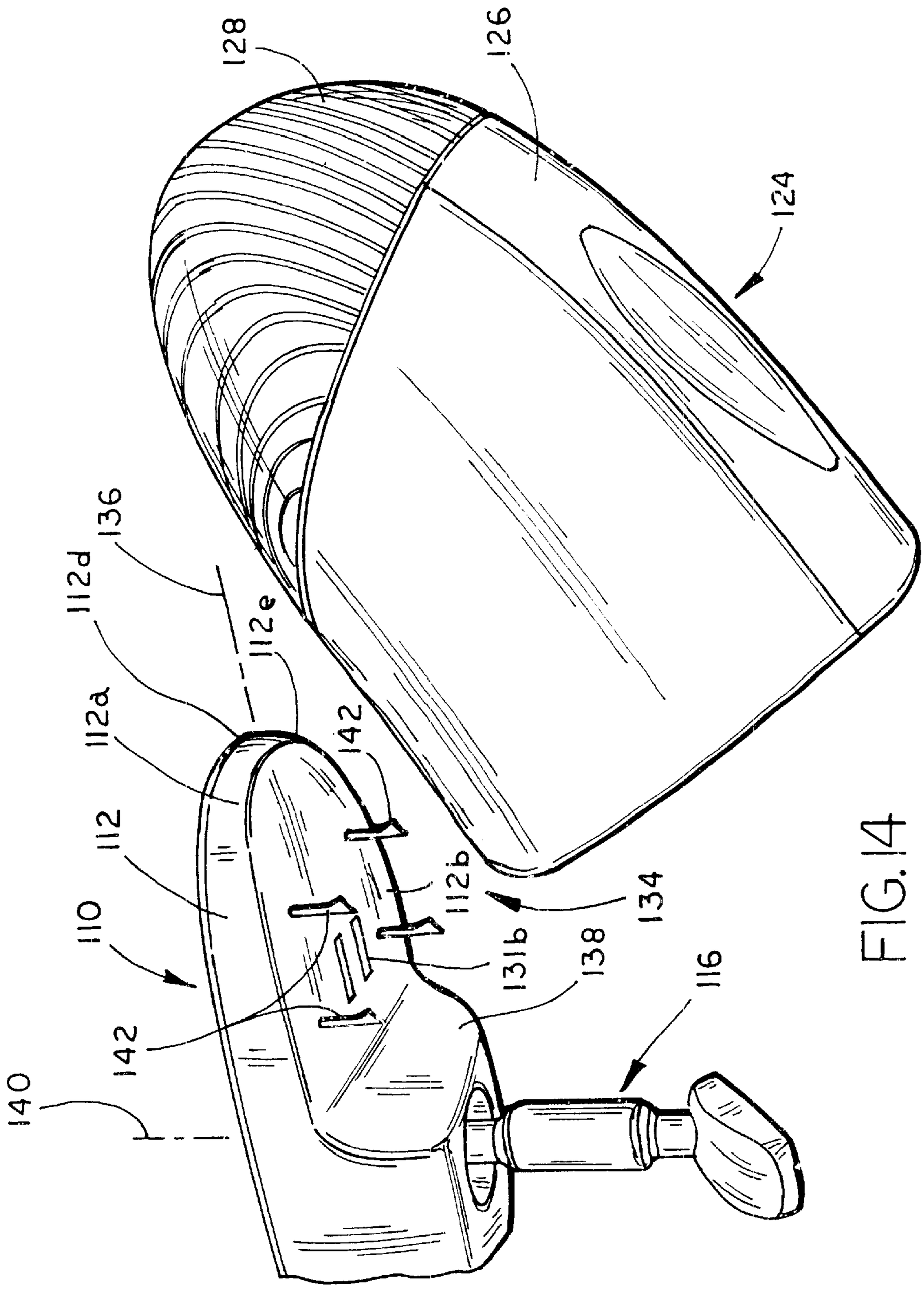
128
126
124
136
112d
112e
112a
142
112
110
112b
134
131b
138
116
142
140

FIG. 14

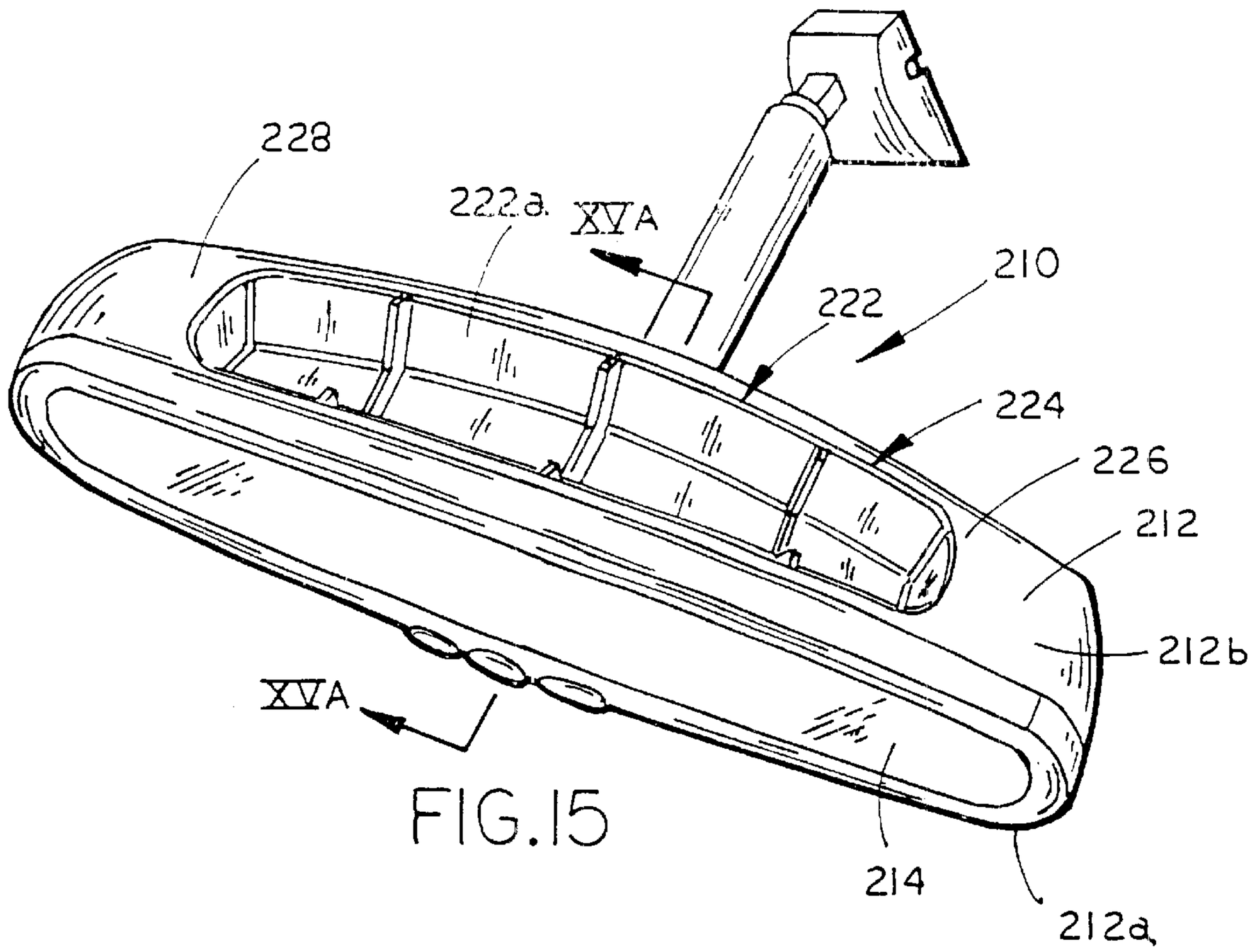
228
222a
XVA
210
222
224
226
212
212b
XVA
214
212a

FIG.15

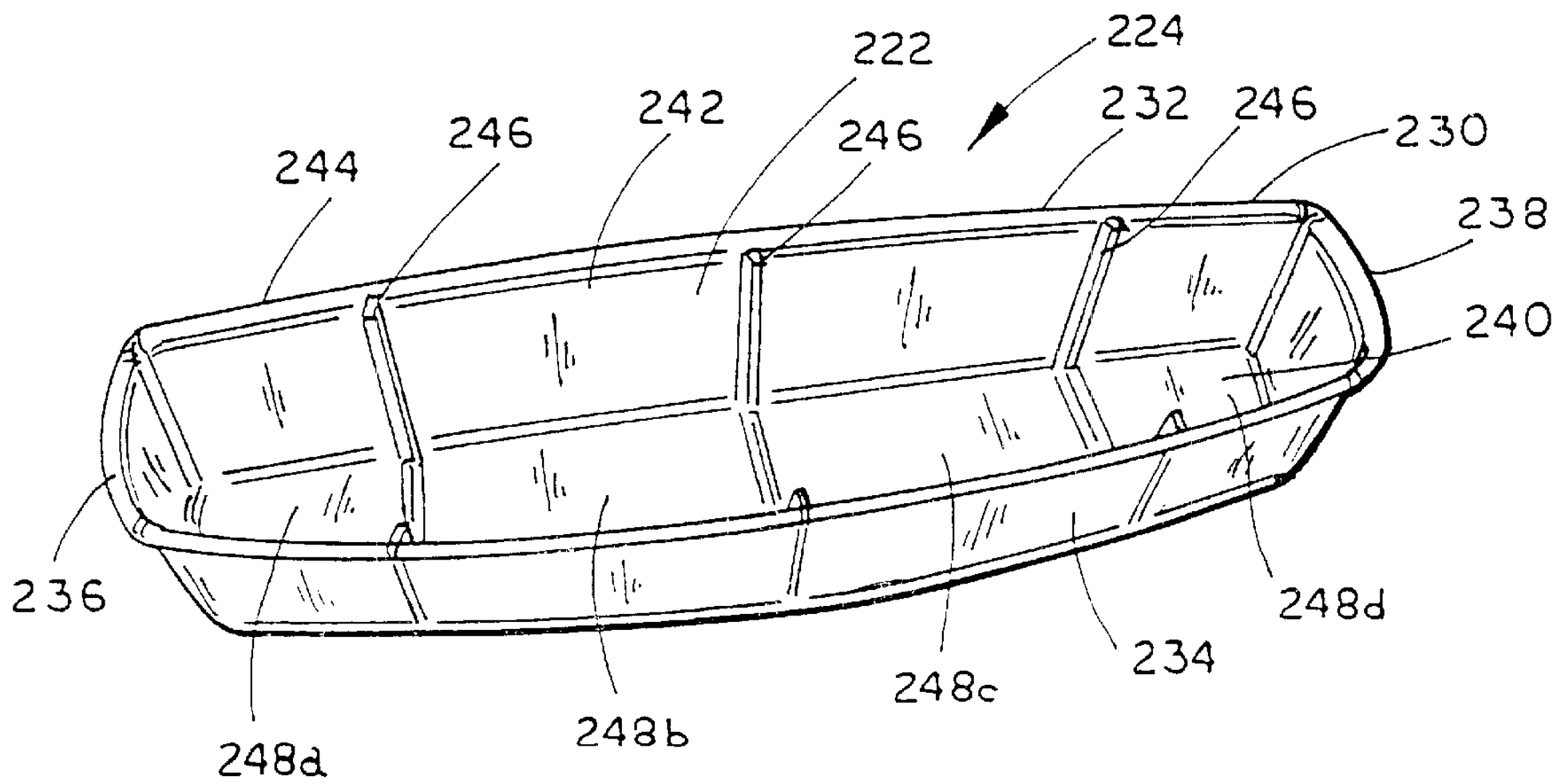
224
222
242
246
246
232
246
230
244
238
240
236
248d
234
248c
248b
248a

FIG.16

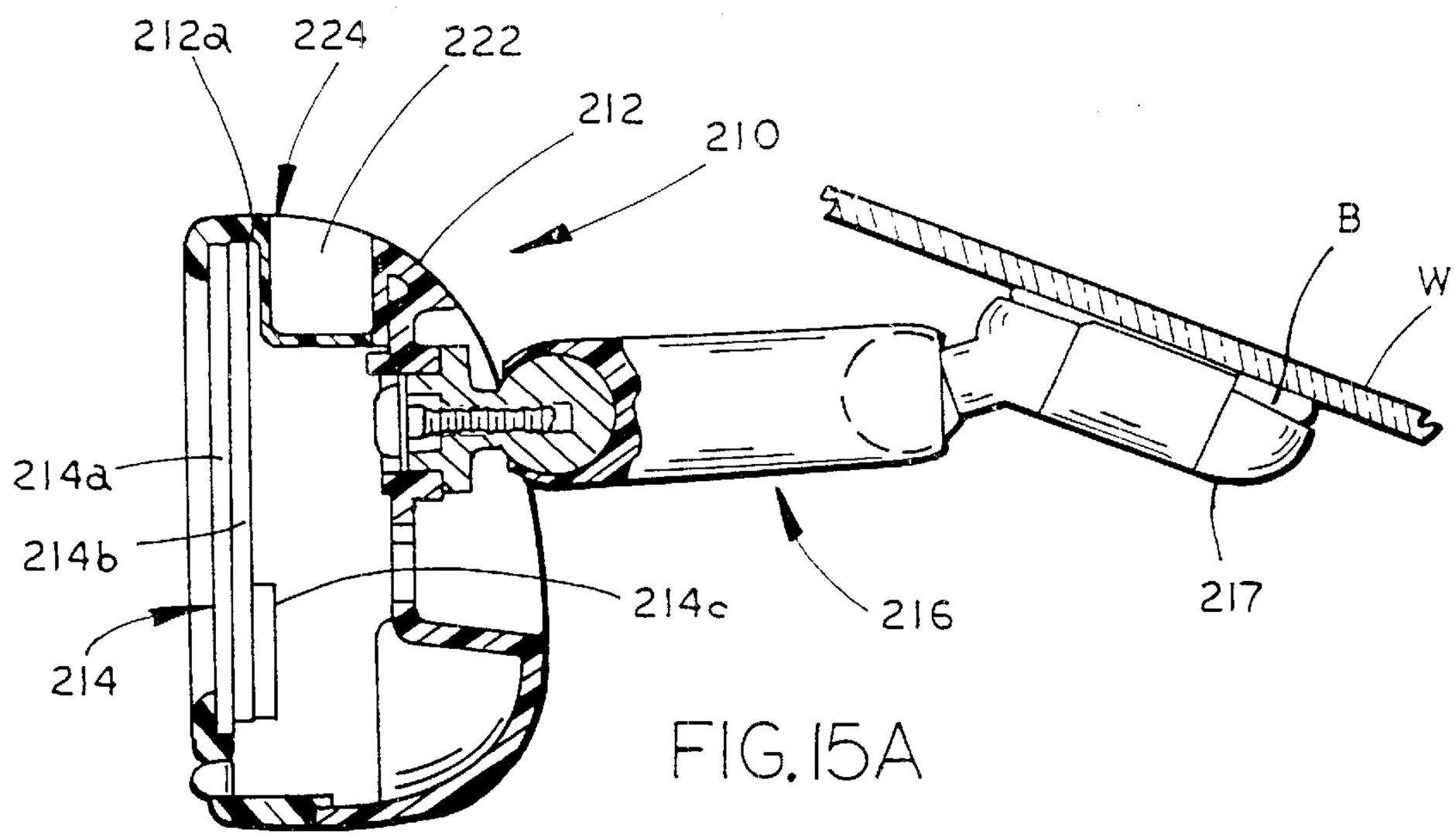

FIG. 15A

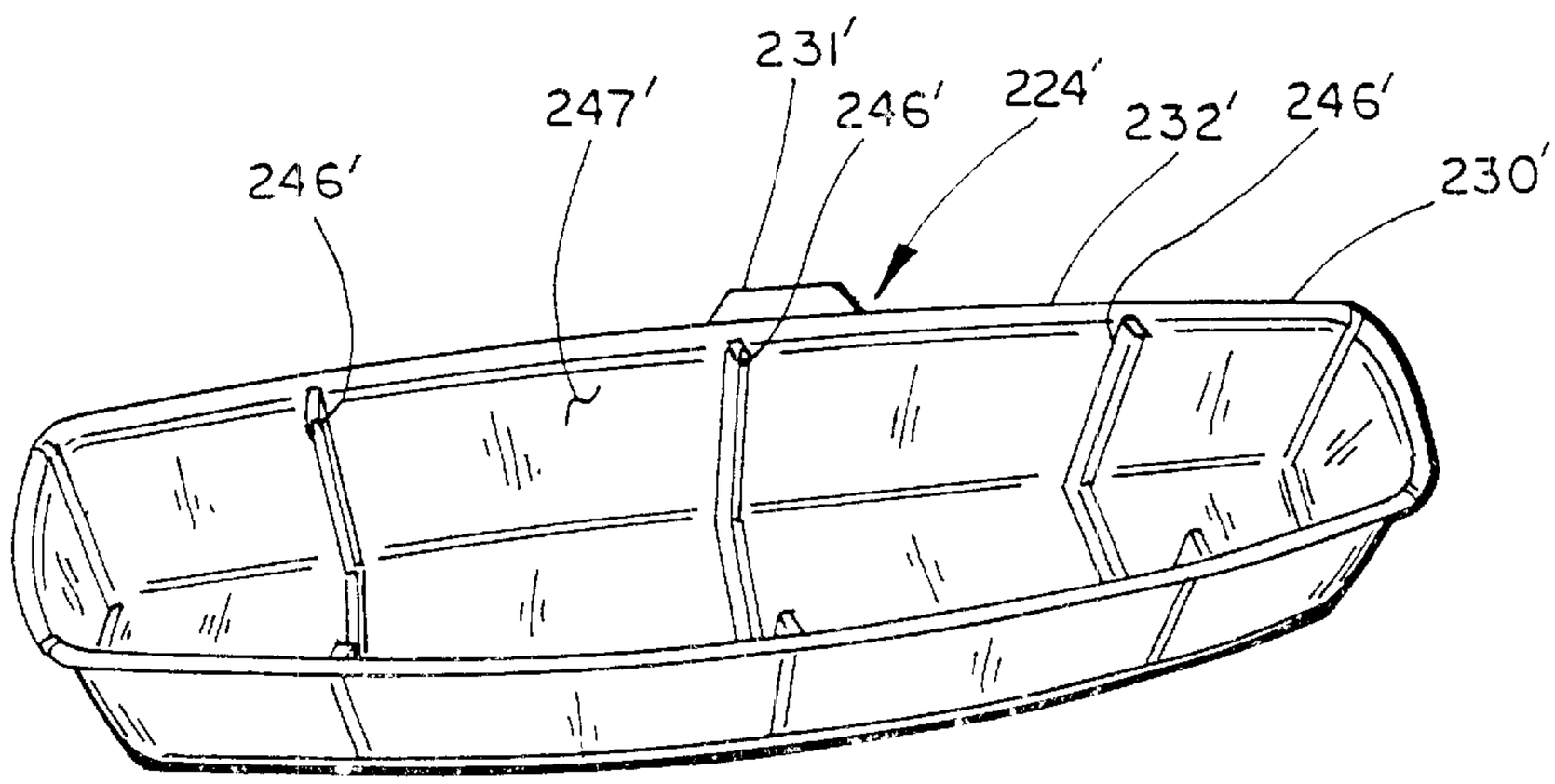

FIG. 16A

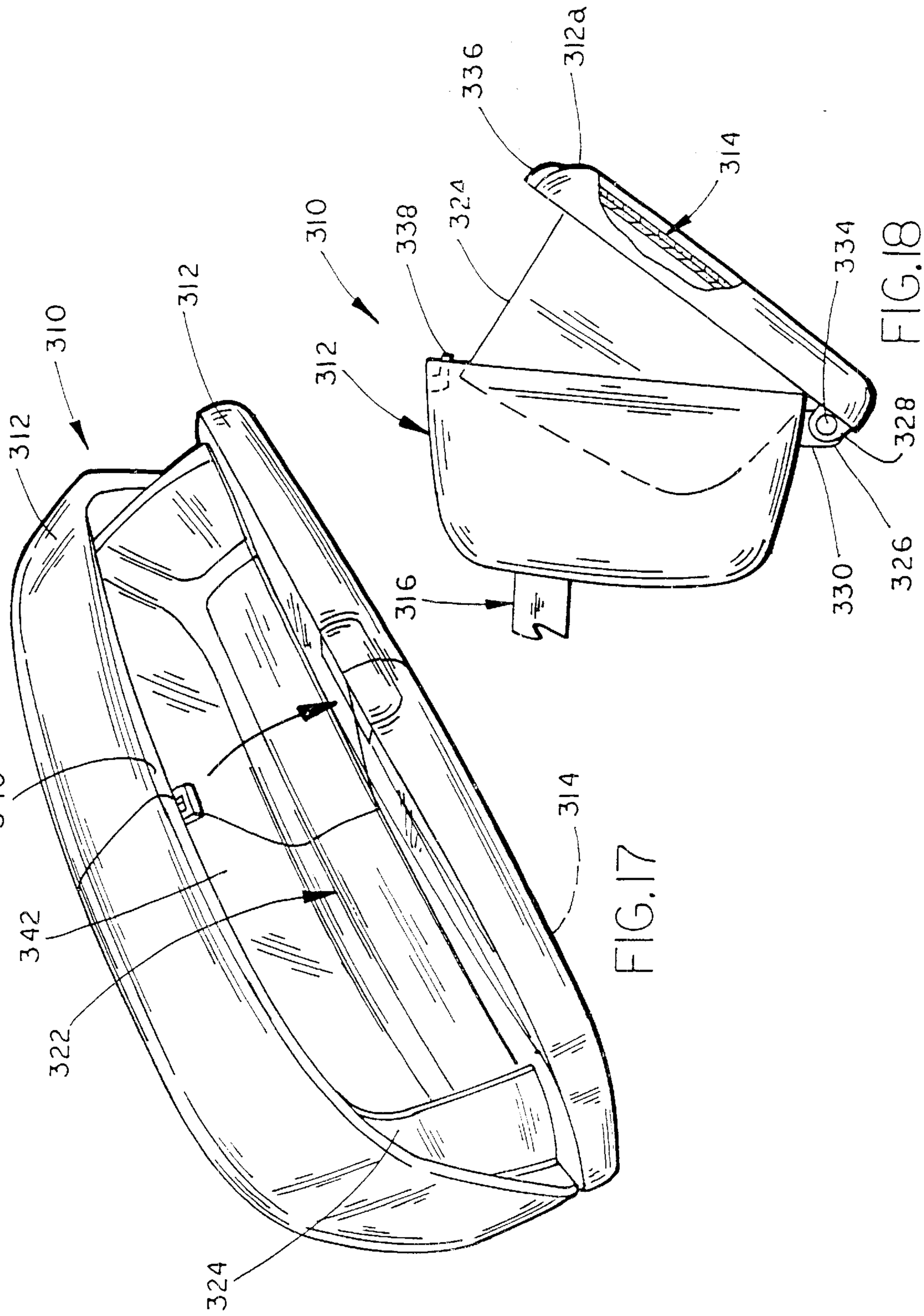
310
312
312
310
312
338
324
336
312a
314
334
328
326
330
316
340
342
322
324
314

FIG. 17

FIG. 18

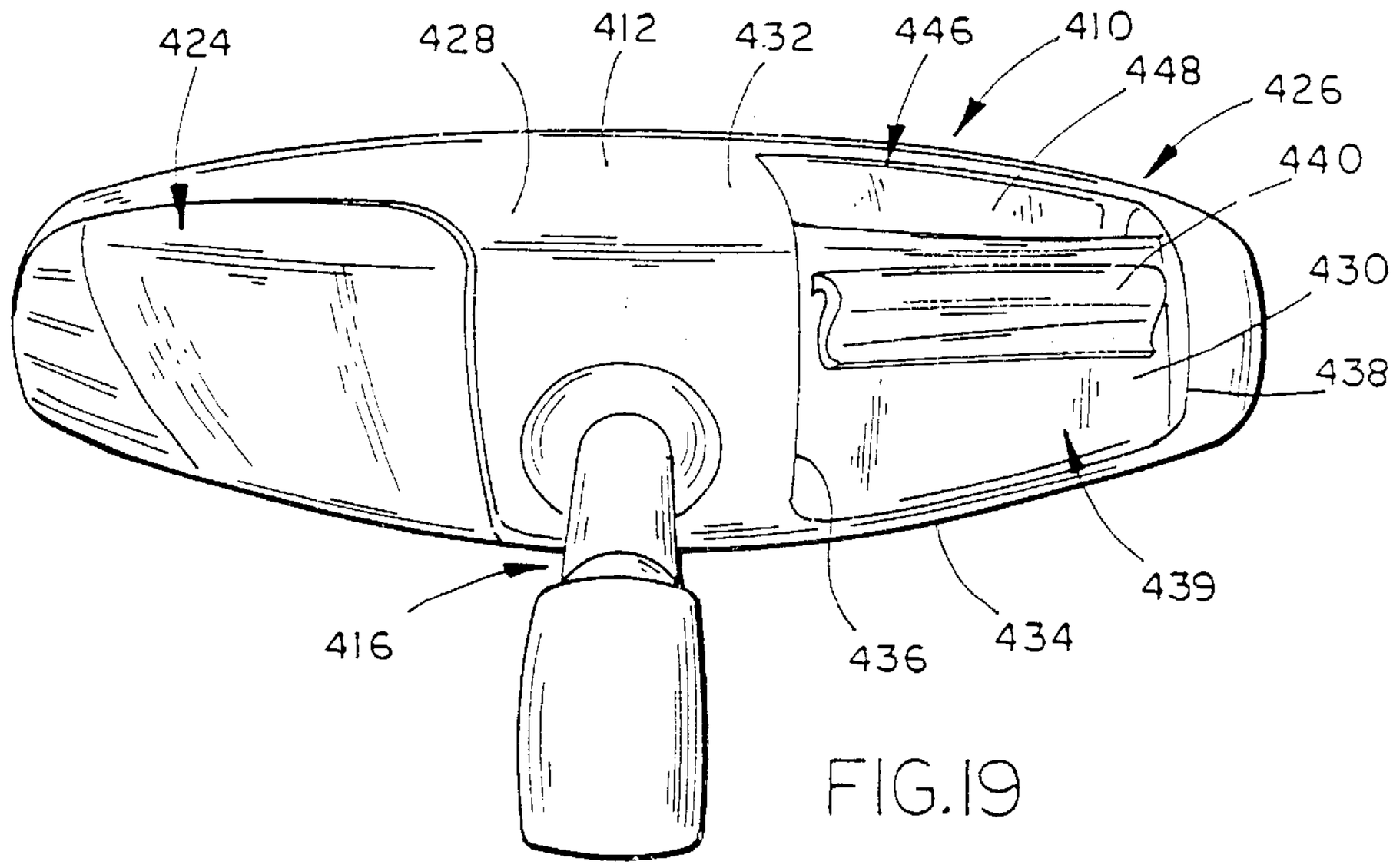
424
428
412
432
446
410
448
426
440
430
438
439
434
436
416

FIG.19

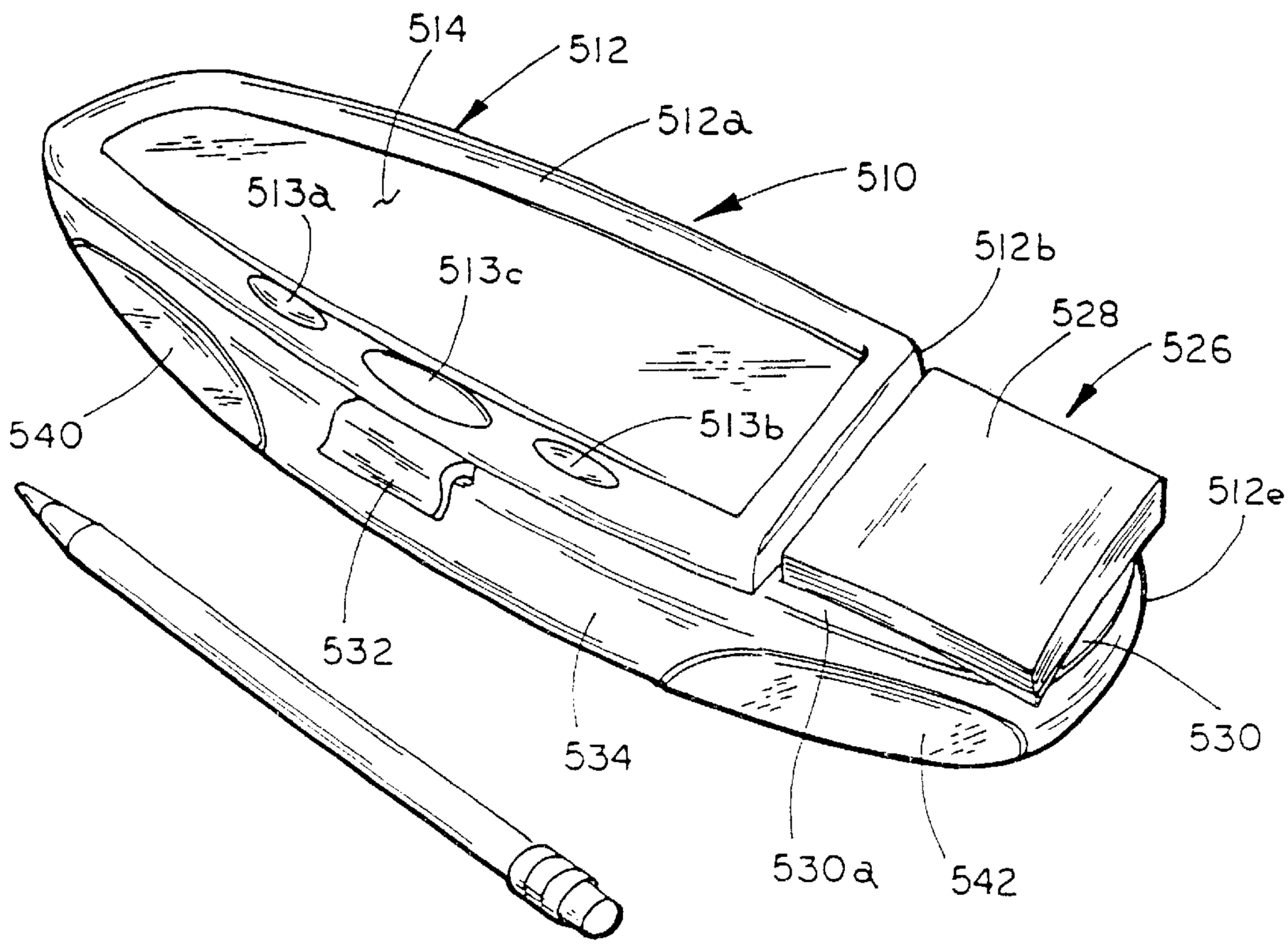
514
512
512a
510
513a
513c
512b
528
526
540
513b
512e
532
534
530
530a
542

FIG.20

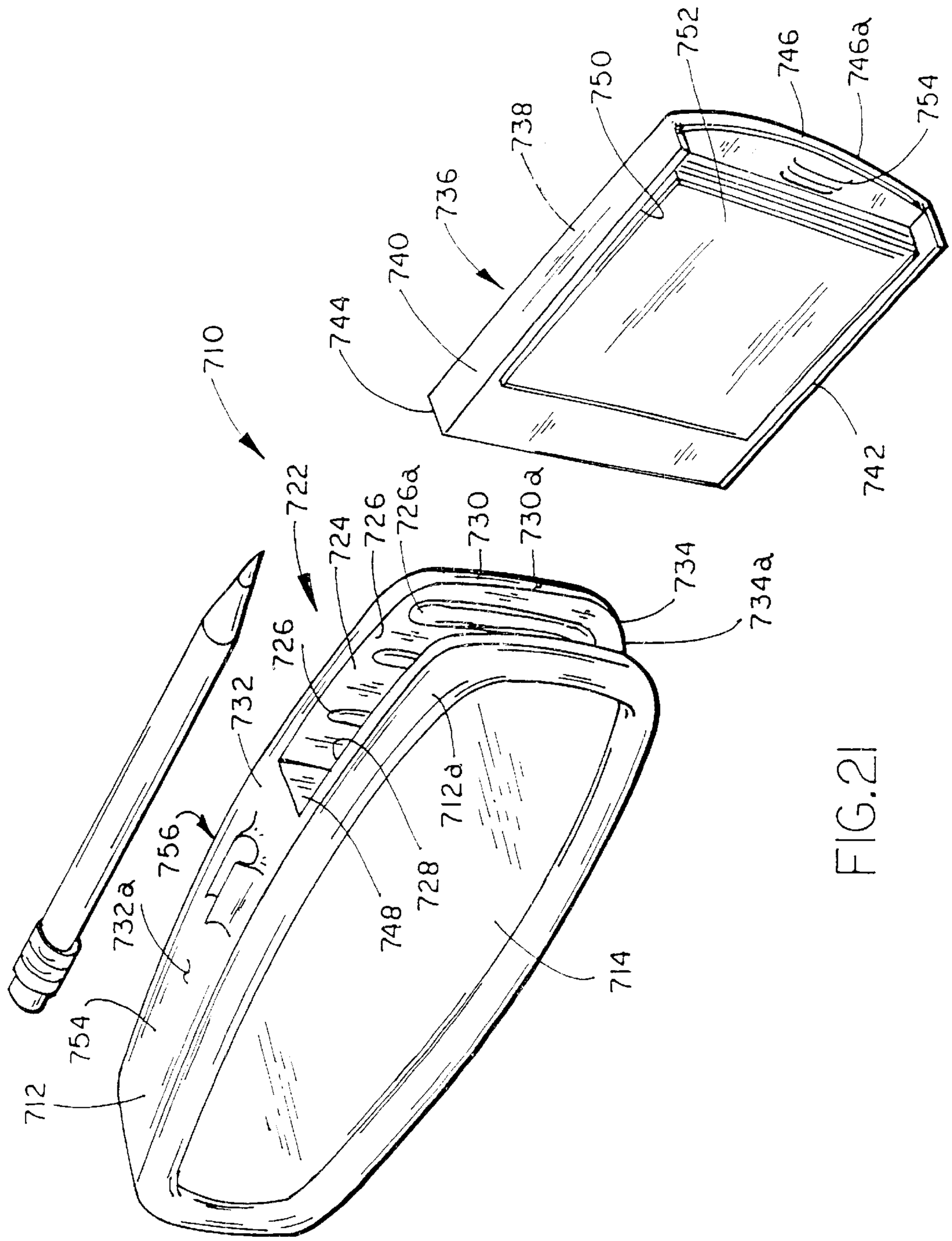
710
712
754
732a
756
732
726
722
724
726
726a
730
730a
734
734a
712a
728
748
714
744
740
736
738
750
752
746
746a
754
742

FIG.21

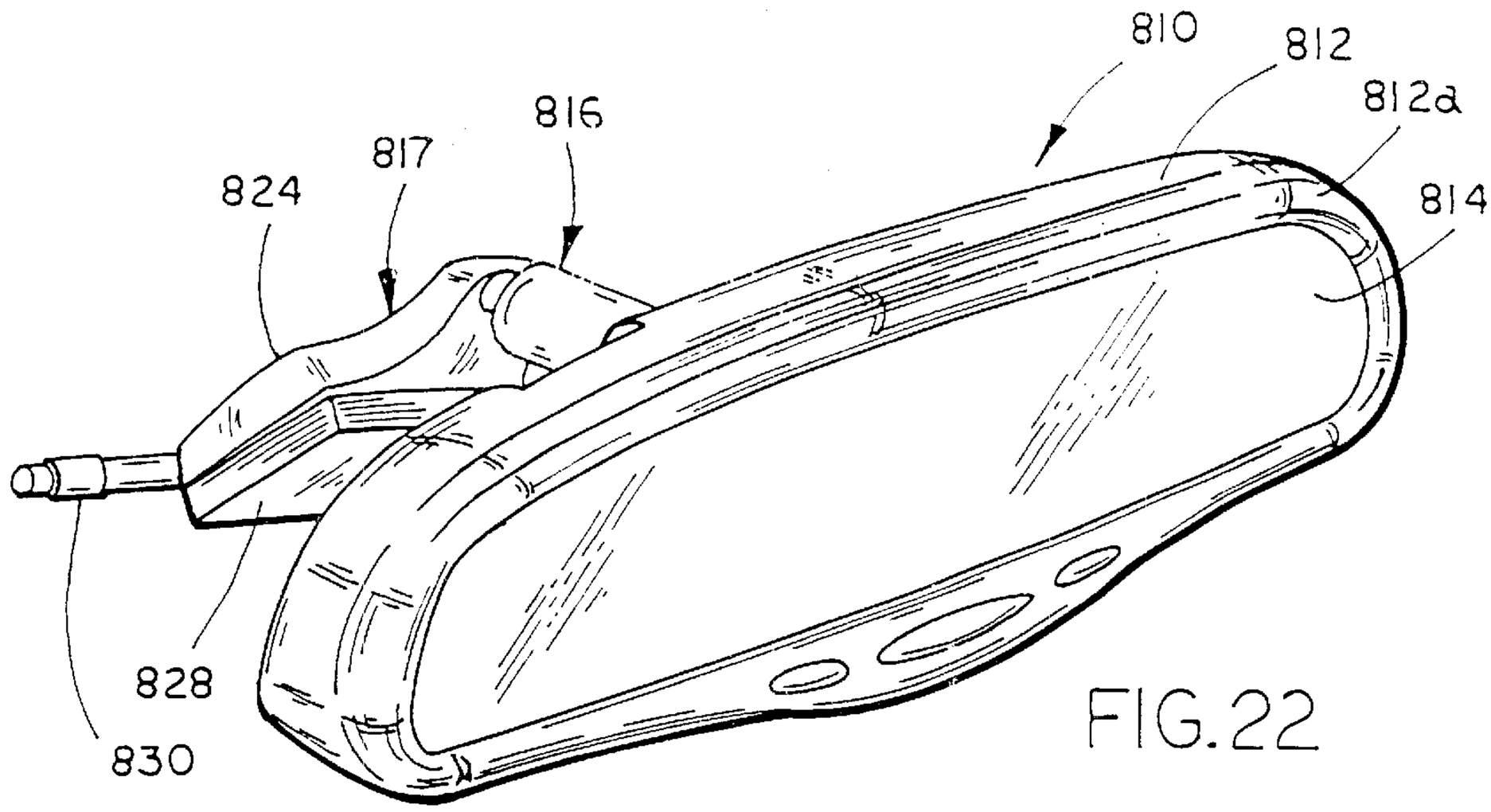
810
812
812a
816
817
824
814
828
830

FIG.22

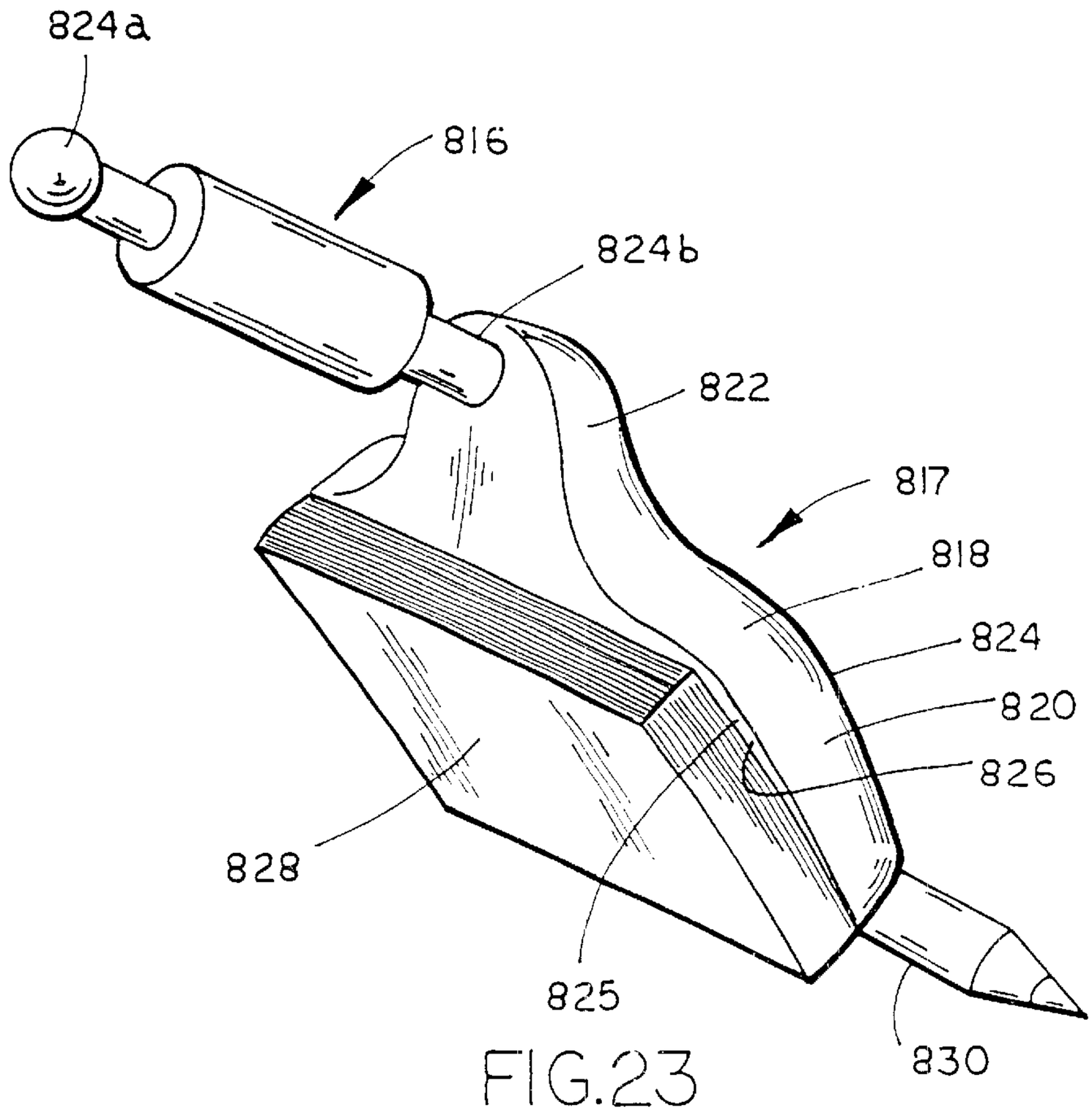
824a
816
824b
822
817
818
824
820
826
828
825
830

FIG.23

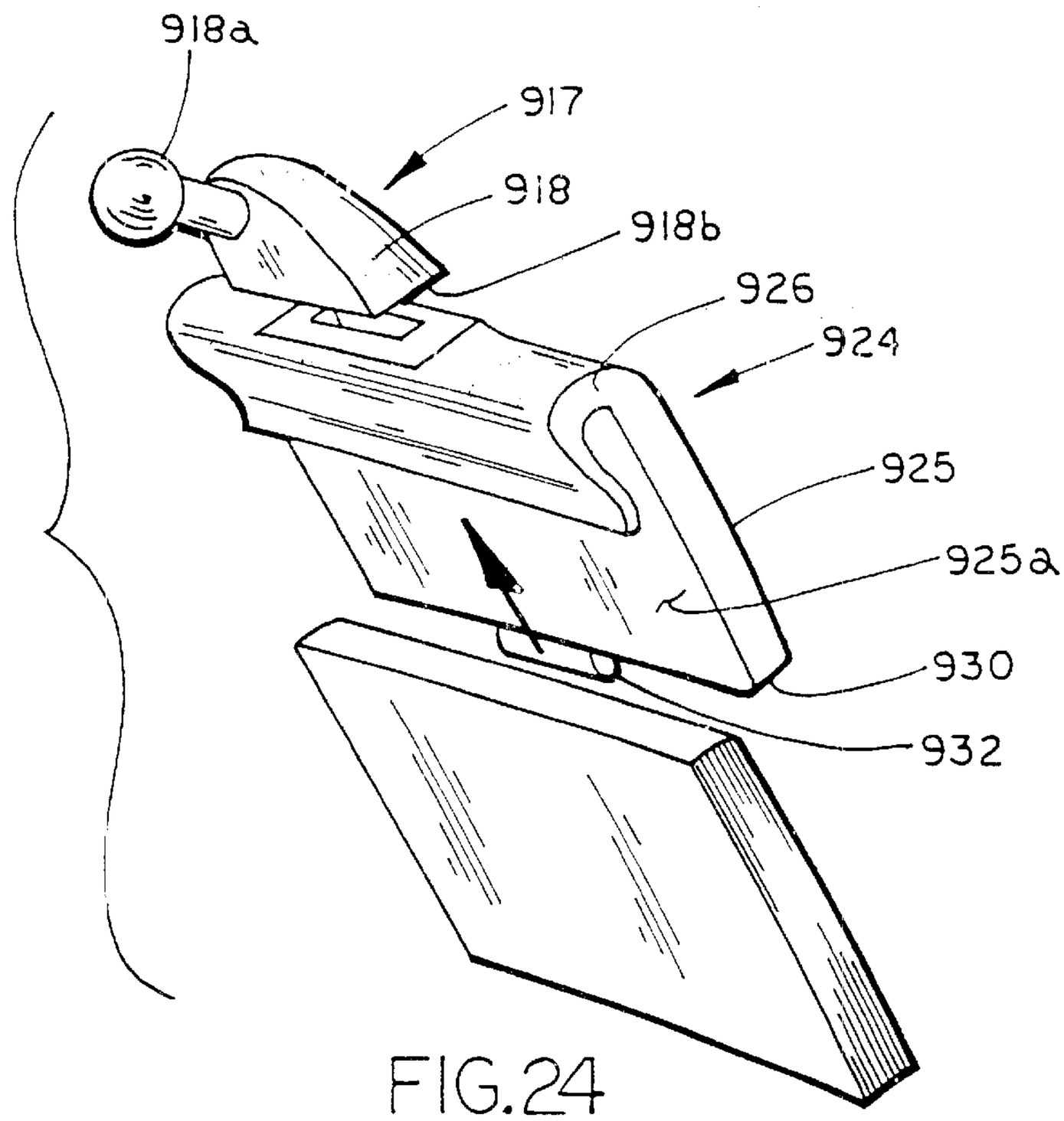
918a
917
918
918b
926
924
925
925a
930
932

FIG.24

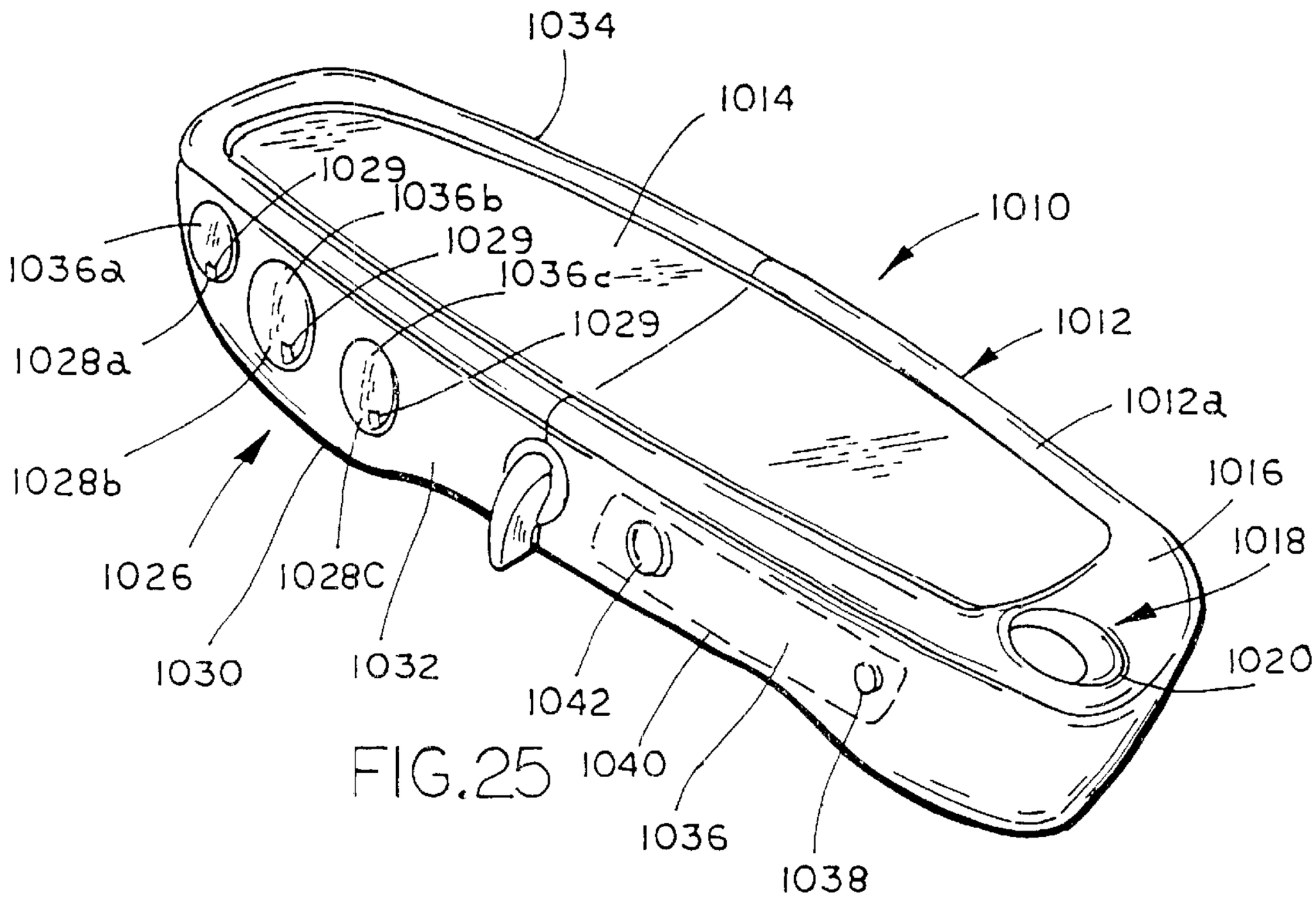
1034
1014
1029
1036b
1029
1036c
1029
1036a
1028a
1028b
1026
1028C
1030
1032
1042
1040
1036
1038
1010
1012
1012a
1016
1018
1020

FIG.25

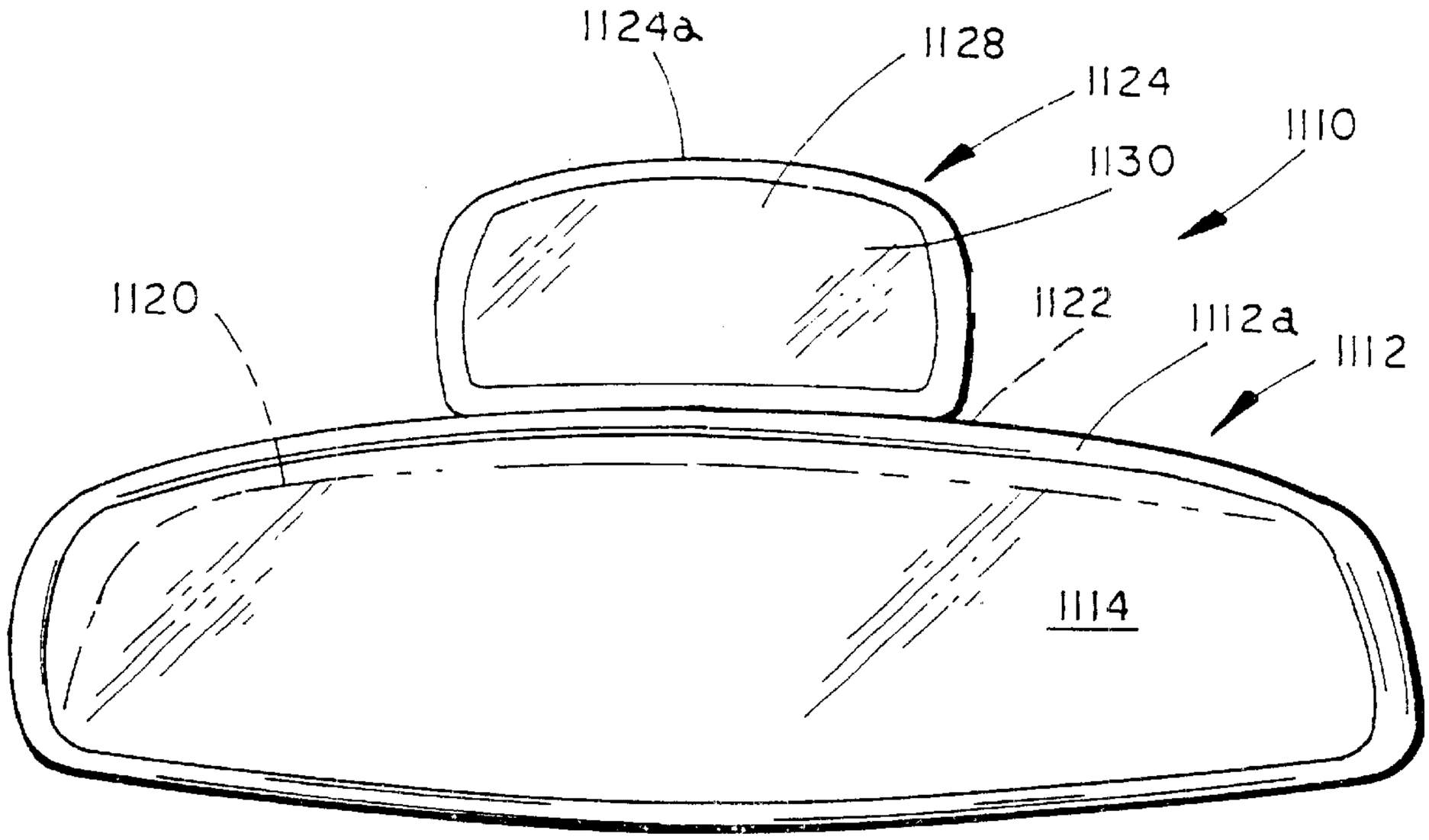
1124a
1128
1124
1110
1130
1120
1122
1112a
1112
1114

FIG.26

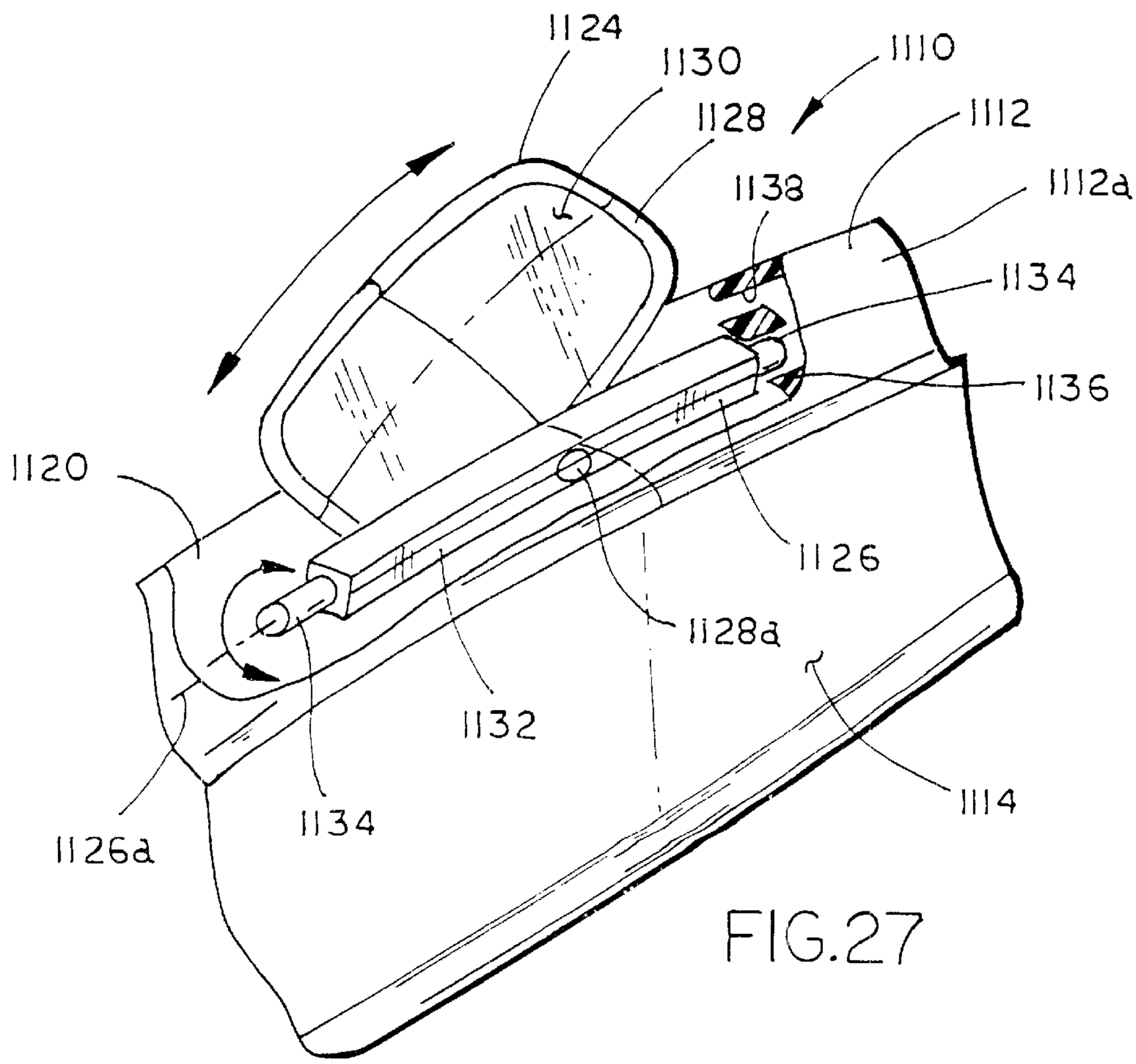
1124
1130
1110
1128
1112
1138
1112a
1134
1136
1120
1126
1128a
1132
1114
1134
1126a

FIG.27

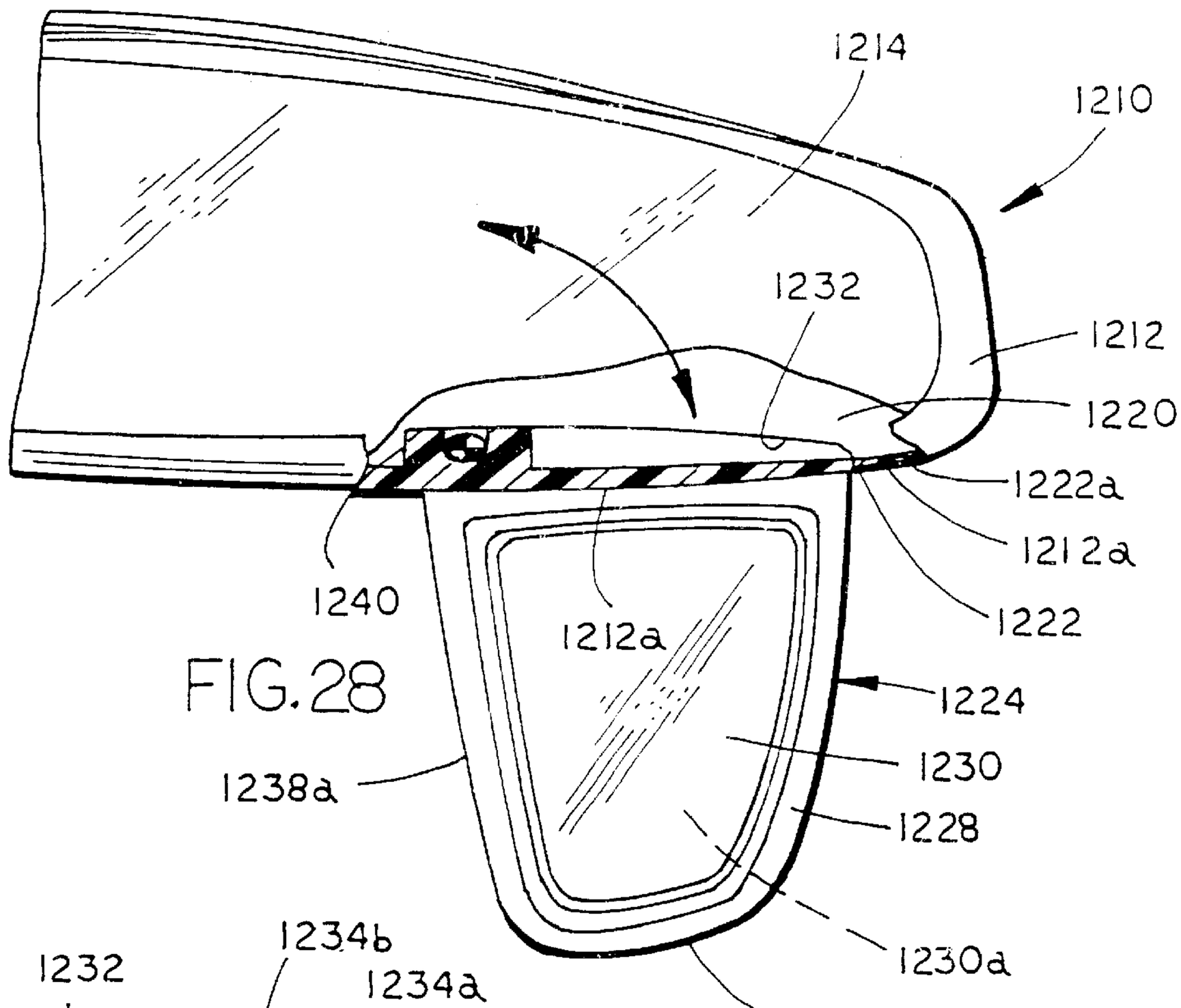
1214
1210
1232
1212
1220
1222a
1212a
1222
1240
1212a
1224
1230
1238a
1228
1230a
1238b

FIG. 28

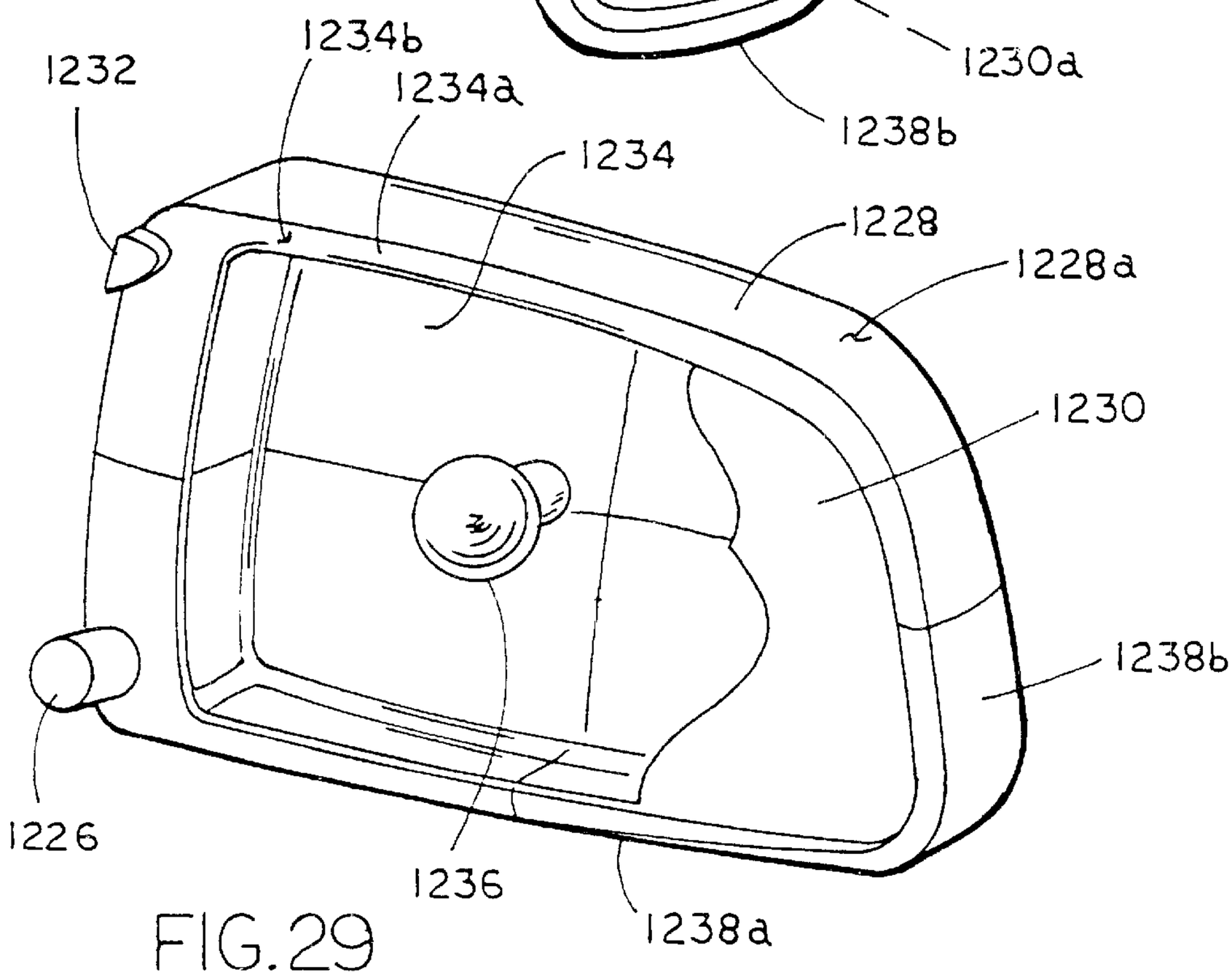
1232
1234b
1234a
1234
1228
1228a
1230
1238b
1226
1236
1238a

FIG. 29

FIG. 30A

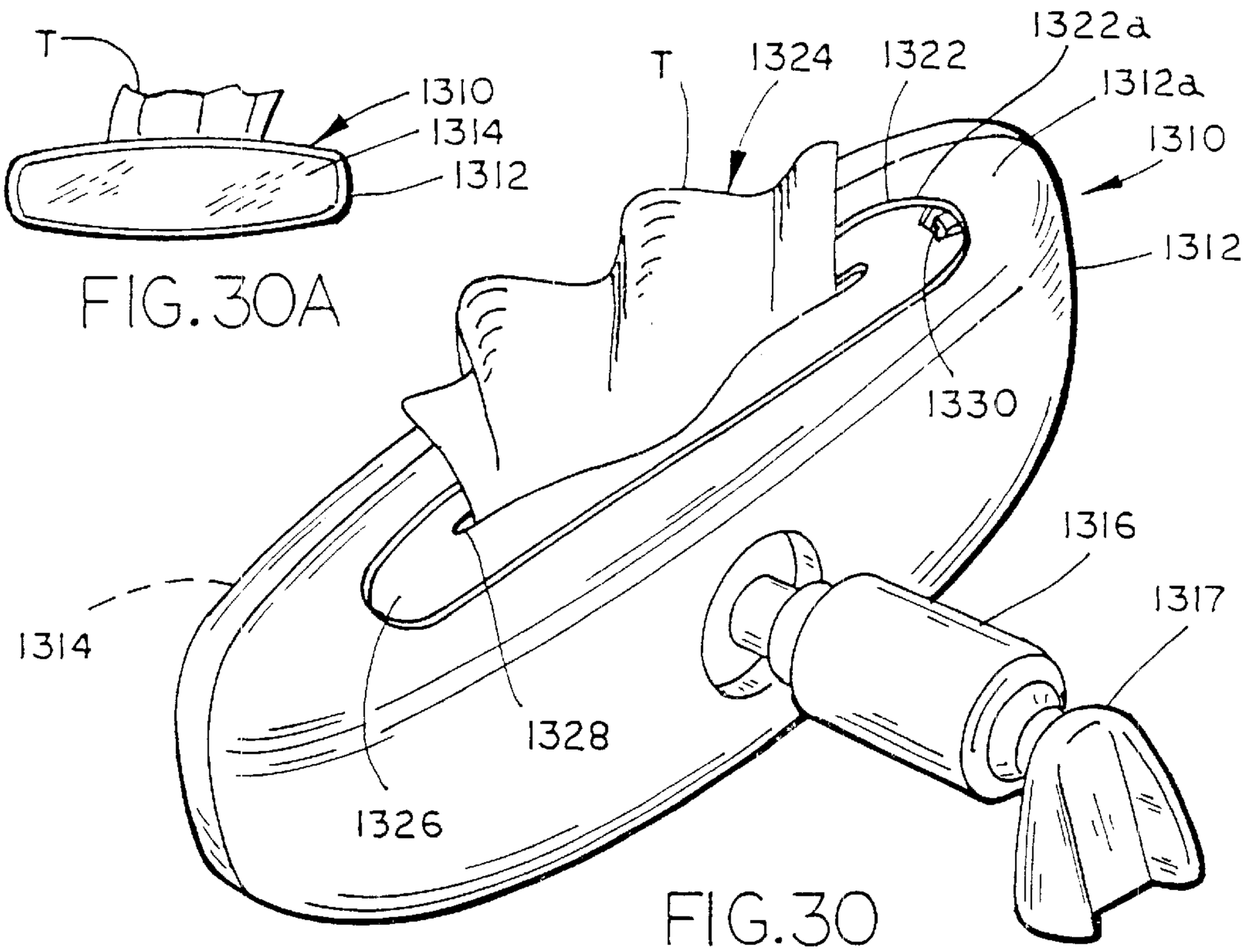

FIG. 30

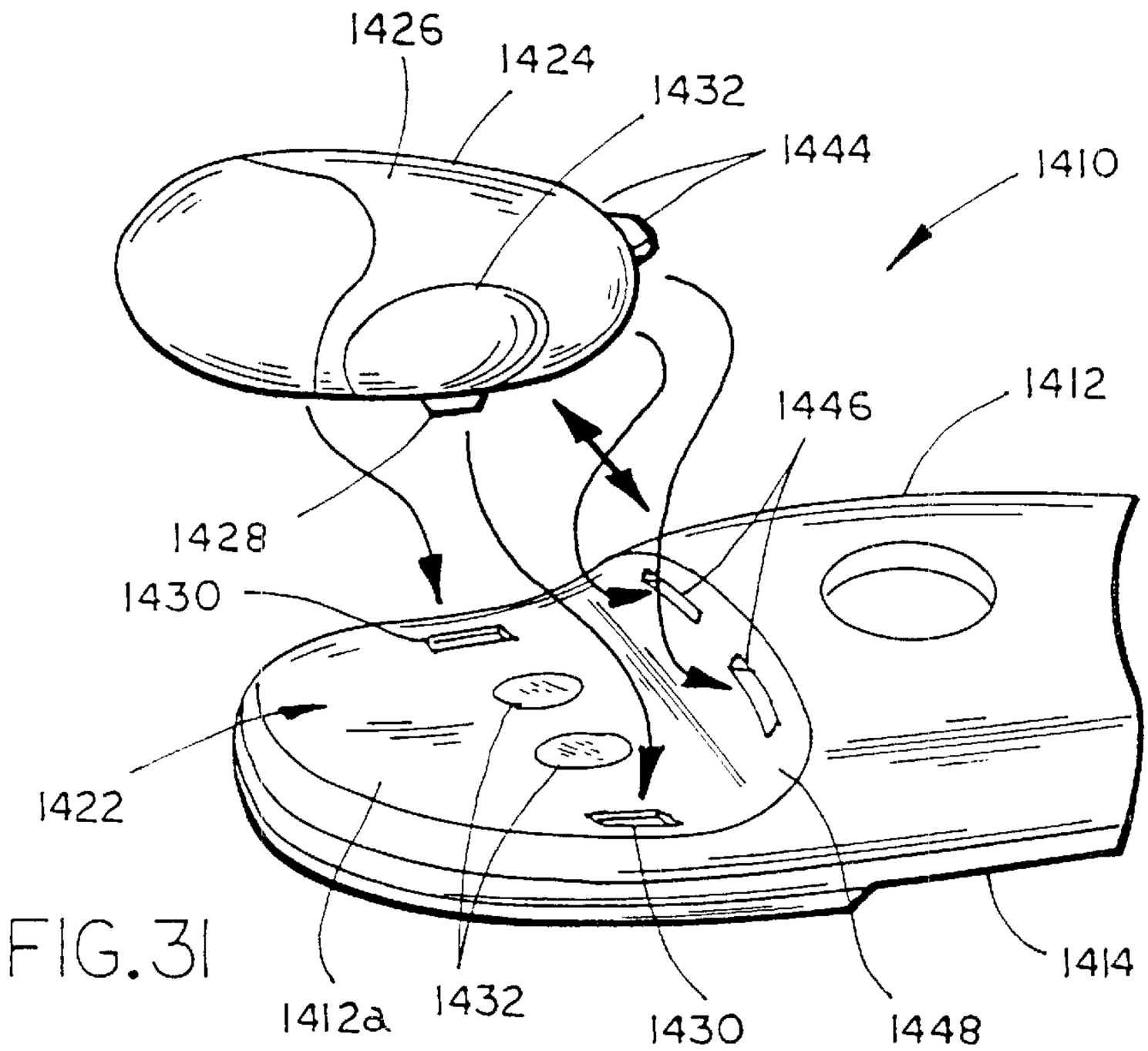

FIG. 31

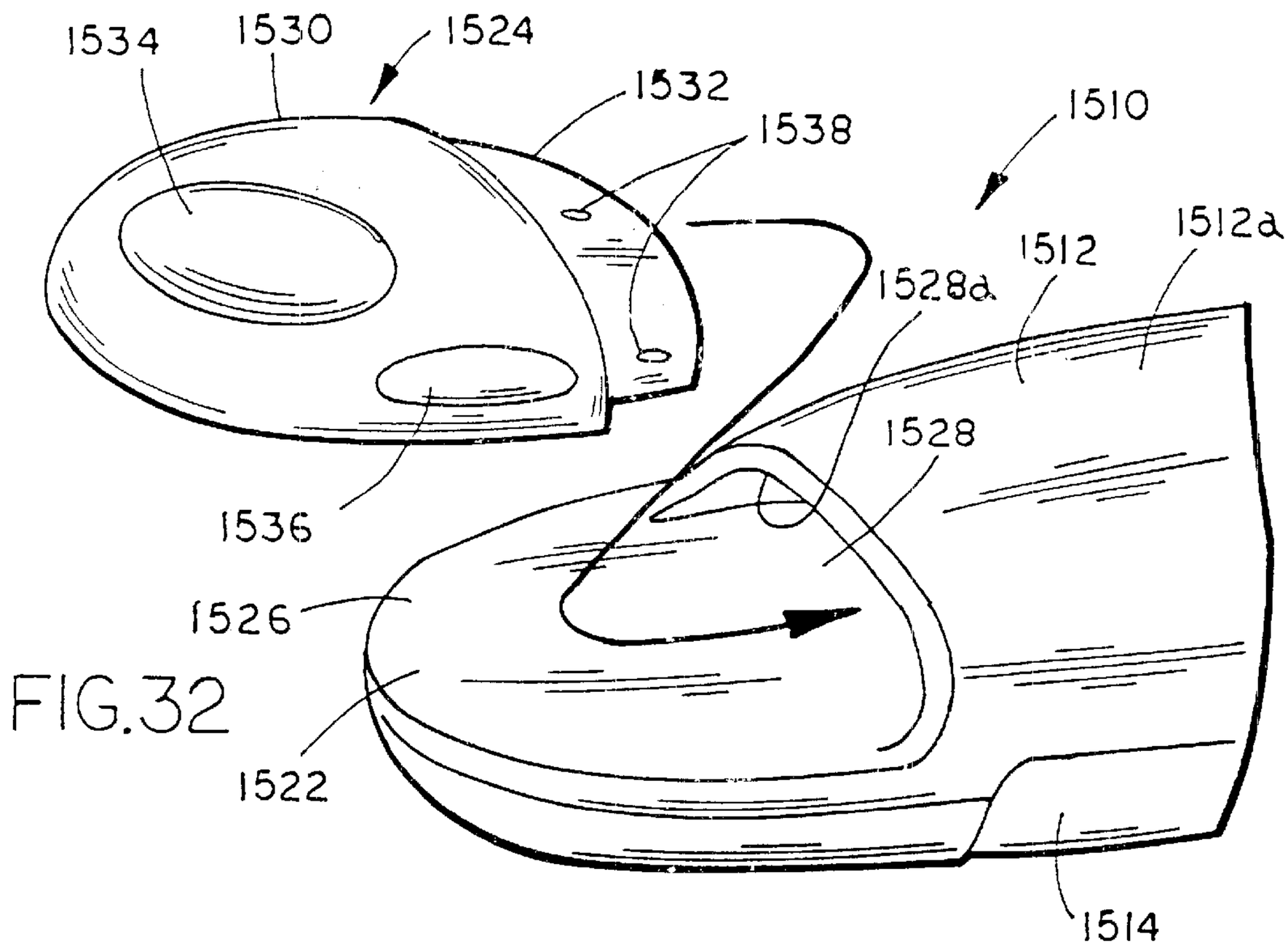
1534
1530
1524
1532
1538
1510
1512a
1512
1528a
1528
1536
1526
1522
1514

FIG.32

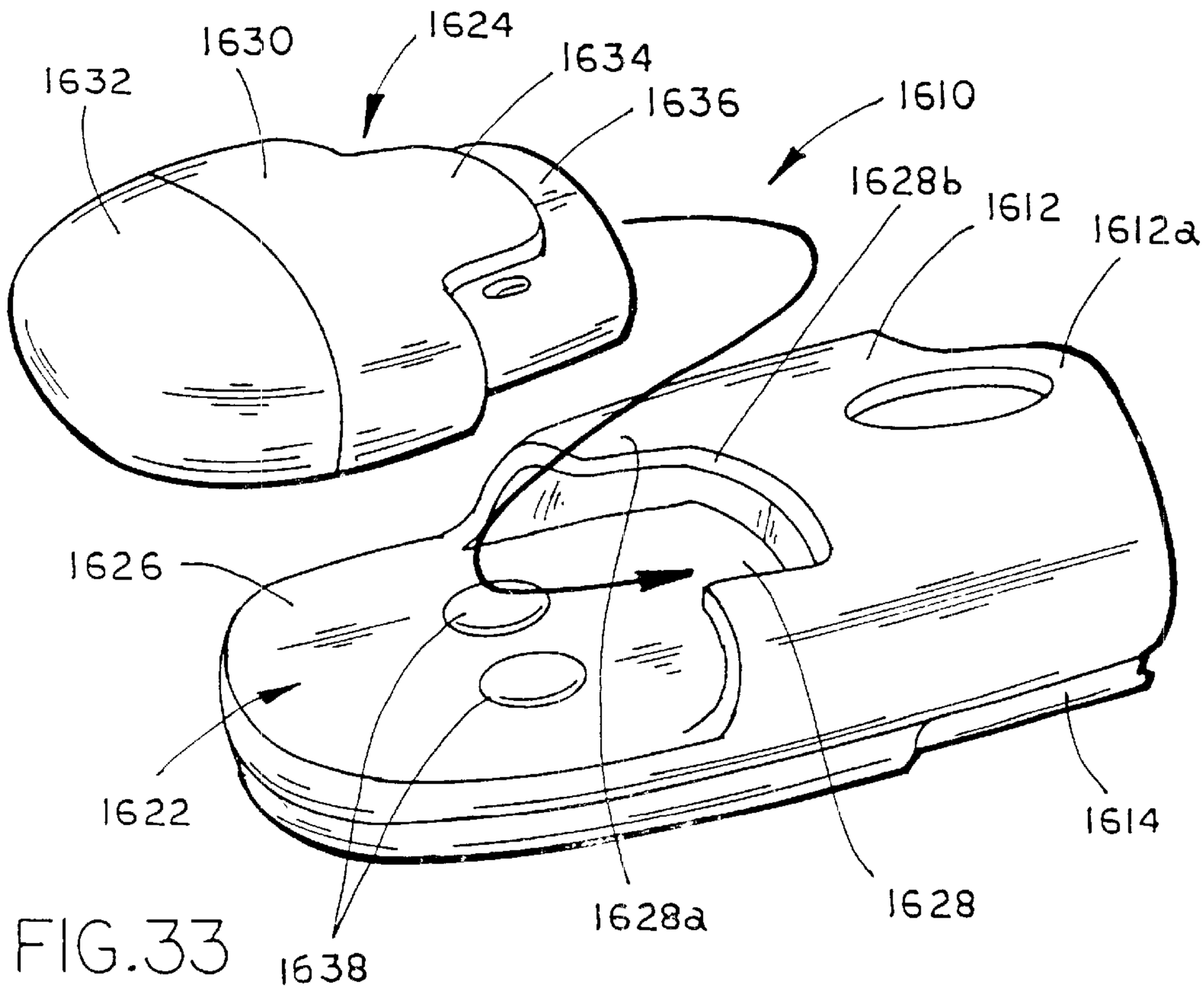
1624
1630
1632
1634
1636
1610
1628b
1612
1612a
1626
1622
1614
1628a
1628
1638

FIG.33

REARVIEW MIRROR ASSEMBLY WITH UTILITY FUNCTIONS

TECHNICAL FIELD AND BACKGROUND OF THE INVENTION

The present invention relates to a rearview assembly and, more specifically to an interior rearview mirror assembly for use in vehicles incorporating utility functions, such as storage space for holding or housing various accessories.

Until recently, rearview mirror assemblies have been used primarily for rear vision. More recently, electronic, electric and various additional functional features, however, have been added to the rearview mirror assembly, for example map reading lights, reflective elements with displays, controls for actuating garage doors, or the like.

With the advent of electro-optic mirrors such as electrochromic mirrors, a new generation of rearview mirrors has afforded the possibility of a slim reflector package. As a day/night actuator mechanism is no longer needed in such mirrors, the size of the reflective element assembly is defined be the thickness of the electrochromic mirror element and by its associated electronics.

In addition, more recently, drivers and occupants of the vehicle engage in more and more non-driving activities, such as telephone conversations, note taking, remote transactions, and the like. As a result, many of these activities take the driver's attention away from the front of the vehicle because the activity involves the driver looking to locations in the vehicle remote from the windshield. Furthermore, while note pad holders have been devised to attach to the windshield, by suction cups or the like, these holders often hamper or obstruct the view through the windshield and may come loose or detach. As a result, the driver of the vehicle may have an obstructed view. Also, frequently a driver or vehicle occupant may remove eyeglasses or sunglasses or the like when exiting the vehicle, and seeks a storage place where they can be left and readily found.

Consequently, there is a need to optimize the available space in the vehicle for storing and locating objects and accessories, such as sunglasses, flashlights, map holders, writing surfaces, pen holders and the like, and, furthermore, providing accessories in a location that is easy to reach but which does not cause the driver of the vehicle to redirect his or her eyes far from the front of the vehicle, thus minimizing or eliminating the driver's distraction. In addition, it is desirable that the space which is used to store or locate these objects and accessories does not obstruct the driver's view.

SUMMARY OF THE INVENTION

The present invention provides an interior rearview mirror assembly, which includes a mount for attachment of the assembly to a windshield or to a header portion of the vehicle interior, and one or more storage spaces for storing, locating or holding objects and/or accessories.

In one form of the invention, an interior rearview mirror assembly includes a casing or housing, a reflective element positioned in the casing, and the casing including a storage space. The storage space provides storage for at least one accessory and for storing the accessory in a location which is easily accessible by an occupant of the vehicle.

In one aspect, the storage space is defined by a recess or pocket provided on or in the casing, for example a recess or pocket provided in an upper wall of the casing. The storage space may comprise a compartment or bin, such as is defined

by the recess or pocket or the like. In further aspects, the storage space comprises an elongated trough-shape body for supporting an accessory, such as at least one of a pair of spectacles, a writing instrument, and coins. In other forms, the casing includes an upper wall and an opening in the upper wall. A storage bin, preferably a removable storage bin, is positioned as an insert in the opening with the insert forming the recess and providing the storage space. In another embodiment, the walls of the bin are defined by the wall of the mirror assembly casing itself, such as formed by molding.

In other forms, the casing includes a recess which extends into a bottom wall of the casing for storing a pendent accessory. For example, the pendent accessory may include a reflective element or may be a display screen, such as a liquid crystal display screen, or may be a writing pad or a keyboard. Preferably, the pendent accessory includes a housing, which supports the accessory. In further aspects, the housing is supported from the mirror assembly by a support. Preferably, the accessory housing is pivotally mounted to the support to permit repositioning of the accessory for viewing by or access to an occupant of the vehicle, such as by a driver or a passenger.

In other aspects, the pendent accessory includes a display screen, such as a touch screen, which displays information for an occupant of the vehicle. In preferred form, the pendent accessory includes a housing which supports the display screen. The housing is supported from the mirror assembly by a support, with the housing being pivotally mounted to the support to permit repositioning of the display screen. Further, the pendent accessory may include a circuit board for supporting electronics which display information on the display screen.

In other aspects, the pendent accessory is mounted for extension and retraction into the recess. Such pendent accessory may be mounted for extension and/or retraction from the casing that houses the reflective element, or from the mirror support arm that supports the mirror casing and about which the mirror casing is pivotably moveable, or from the mirror mount where the interior rearview mirror attaches to the vehicle such as to a button adhered to the windshield or to an attachment point in the header region of the roof-area of the vehicle. The pendent accessory housing includes an outer surface which generally aligns with the outer surface of the casing when the housing is moved to its retracted position within the casing.

In other aspects, the casing includes an accessory attachment member for releasably holding an accessory. For example, the accessory attachment member may comprise a clip or retainer with generally resilient or spring-like arm for receiving and releasably retaining an object such as a pen, a tool or the like. Such attachment member may comprise a generally C-shaped clip for releasably holding a work piece. Optionally, the accessory attachment member is integrally molded with the casing. For example, the accessory attachment member may be provided at the bottom wall of the casing or provided on a forward facing (relative to the direction of travel of the vehicle) wall of the casing so that, when the interior mirror assembly is mounted in the vehicle, a work piece (such as for example, a writing instrument such as a pencil or a pen or a tool or a utility instrument such as a Swiss Army knife) is held to the mirror housing at its rear, and between the outer wall of the mirror housing and the inner surface of the vehicle windshield.

In yet a further aspect, the casing includes a recess formed in a forward facing side of the casing. A dockable assembly

such as a flashlight, phone, or pager is supported in the recess and is removably mounted to the casing such that an occupant of the vehicle can quickly and easily remove the dockable assembly for use independently of the rearview mirror assembly.

In further aspects, the casing includes an upper wall, a lower wall, and opposed end walls. A recess extends into one of the end walls thereby defining a storage space. The recess extends between the upper and lower walls to define a slotted recess which supports an accessory holder. The accessory holder is slidably positioned and releasably held in the recess. Preferably, the holder includes a body with upper and lower walls, an end wall, and a back wall. The end wall inserts into the recess when the holder is positioned in the recess. At least one of the upper wall, lower wall, and an edge of the back wall is aligned to follow contours of the casing when the holder is positioned in the recess.

In another form of the invention, an interior rearview mirror assembly includes a casing or reflective element supported in the casing and a support for mounting the casing to a windshield mounting button. The support preferably includes a break-away bracket or mount which includes a storage space for supporting at least one accessory thereon.

In one aspect, the bracket includes a planar mounting surface for supporting the accessory thereon. Optionally, the bracket may include an accessory attachment member for holding a work piece. In further aspects, the bracket includes a bottom edge, with the accessory attachment member being positioned at the bottom edge.

Advantages provided by the present invention include a high mounted storage location which is easily accessible to an occupant of the vehicle. In addition, by incorporating the storage space into an interior rearview mirror assembly the distraction caused by retrieval from or placement into the storage space is minimized as the effort or action to retrieve or store is equivalent to the action of adjusting the position of the rearview. Further, the location of the storage space is not readily discernible from the outside of the vehicle enhancing the security of the vehicle.

These and other objects, advantages, purposes, and features of the invention will become more apparent from the study of the following description taken in conjunction with the drawings.

BRIEF DESCRIPTION OF THE DRAWINGS

FIG. **1** is a front perspective view of the rearview mirror assembly for vehicles of the present invention showing an interior rearview mirror assembly in a viewing position in a front windshield of a vehicle;

FIG. **2** is a sectional end view of the assembly of FIG. **1** taken along line II—II of FIG. **1**;

FIG. **3** is a bottom perspective view of the rearview mirror assembly of FIG. **1**, with portions broken away, illustrating a pendent accessory in an extended position;

FIG. **4** is a bottom perspective view of the mirror assembly of FIG. **3** illustrating the pendent accessory moved to a second orientation;

FIG. **5** is an enlarged bottom perspective view of the mirror assembly of FIG. **4**, with the pendent accessory positioned in a third orientation;

FIG. **6** is an enlarged end perspective view of the mirror assembly of FIG. **5**;

FIG. **7** is a bottom perspective view of FIG. **1** illustrating the pendent accessory of FIG. **3** in a partially retracted position within the mirror assembly housing;

FIG. **8** is an enlarged bottom perspective view of a portion of the exterior rearview mirror assembly of FIG. **1**, with the pendent accessory fully retracted within the housing;

FIG. **8**A is a perspective view similar to FIG. **1** illustrating the rearview mirror assembly of FIG. **1** with a display screen adjacent the reflective element;

FIG. **8**B is a view similar to FIG. **8**A illustrating the rearview mirror assembly with a pair of display screens;

FIG. **9** is a top plan view of an interior rearview mirror similar to FIG. **1** illustrating the mirror housing incorporating a flashlight assembly;

FIG. **10** is a rear perspective view of the mirror assembly of FIG. **9**;

FIG. **11** is a top perspective view of the mirror of FIG. **9**;

FIG. **12** is a bottom perspective view of the mirror assembly of FIG. **9**;

FIG. **13** is an exploded bottom perspective view of the mirror subassembly of FIG. **9**;

FIG. **14** is a partial rear exploded perspective view of the mirror assembly of FIG. **9**;

FIG. **15** is a top perspective view of a third embodiment of the rearview mirror assembly of FIG. **1** illustrating a recessed storage space for supporting or holding accessories;

FIG. **15**A is a partial fragmentary view taken along line XVA—XVA of FIG. **15**;

FIG. **16** is an enlarged perspective view of an insert module for inserting into the mirror assembly casing of FIG. **15** defining the recessed storage space;

FIG. **17** is a top perspective view of a fourth embodiment of the mirror assembly of FIG. **1** illustrating a storage space within the mirror assembly housing;

FIG. **18** is a cross-sectional view taken along line XVIII—XVIII of FIG. **17**;

FIG. **19** is a rear perspective view of a fifth embodiment of the interior rearview mirror assembly FIG. **1** illustrating a flashlight assembly module mounted to a first storage space and a second storage space with a clip for holding an accessory and a third storage space for holding other accessories;

FIG. **20** is a bottom perspective view of a sixth embodiment of the mirror assembly of FIG. **1** illustrating a work piece holder and a writing pad holder incorporated into the housing of the rearview mirror assembly and, further, with two map or dash board light assemblies;

FIG. **21** is a front exploded perspective view of a seventh embodiment of a mirror assembly similar to FIG. **1** illustrating a slotted storage space for holding an accessory holder, such as a writing pad holder;

FIG. **22** is a perspective view of an eighth embodiment of the interior rearview mirror assembly incorporating a pad and pencil holder into a mirror mounting bracket;

FIG. **23** is a perspective view of the paper and pencil holder of FIG. **22**;

FIG. **24** is an exploded perspective view of a second embodiment of the paper and pencil holder;

FIG. **25** is a bottom perspective view of a ninth embodiment of the rearview mirror assembly of the present invention illustrating a storage space for holding and dispensing coins, a 12-volt supply, and an air freshener dispenser;

FIG. **26** is a front view of another embodiment of the interior rearview mirror assembly illustrated in FIGS. **1**–**8**;

FIG. **27** is a top perspective partial fragmentary view of the interior rearview mirror assembly of FIG. **26**.

FIG. **28** is a partial front view of a third embodiment of the interior rearview mirror assembly illustrated in FIGS. **1–8** illustrating a pivotally mounted pendent accessory;

FIG. **29** is an enlarged perspective view of the pendent accessory housing of FIG. **28**;

FIG. **30** is another embodiment of the rearview mirror assembly illustrated in FIGS. **15**, **15**A, and **16**;

FIG. **30**A is a forward elevation view of the mirror assembly of FIG. **30**;

FIG. **31** is a partial rear exploded perspective view of a second embodiment of the mirror assembly of FIGS. **9–14**;

FIG. **32** is a partial rear exploded perspective view of a third embodiment of the interior rearview mirror assembly of FIGS. **9–14**; and

FIG. **33** is a partial rear exploded perspective view of a third embodiment of the mirror assembly FIGS. **9–14**.

DESCRIPTION OF THE PREFERRED EMBODIMENTS

Referring to FIG. **1**, the numeral **10** generally designates a first embodiment of the interior rearview mirror assembly of the present invention. Assembly **10** is adapted to be releasably secured or coupled to the front windshield W of a vehicle in a conventional manner. Alternatively, assembly **10** can be adapted to secure or couple to the header portion of the vehicle above the windshield. Assembly **10** includes a mirror casing or housing **12** and a reflective element **14** which is supported in or on casing **12** in a conventional manner. Referring to FIG. **2**, in the illustrated embodiment, mirror assembly **10** is mounted to windshield W by a support arm **16** and a break-away mounting bracket or mirror mount **17** which releasably mounts to a conventional mirror button on windshield W. Preferably support arm **16** is a conventional double ball type support arm which permits multi axis positioning of casing **12** about bracket **17**. It should be understood that any suitable type of support arm may be employed for supporting mirror subassembly **10** within the vehicle, for example a single ball mount support or the like. In addition, break-away mounting bracket **17** may take one of several forms, such as those described and shown in U.S. Pat. Nos. 5,820,097; 5,615,857; 5,330,149; 5,100,095; or 4,936,533; the disclosures of which are incorporated by reference herein in their entireties.

Mirror casing or housing **12** is preferably molded from a resinous plastic material, such as an engineering polymer material, for example a fiber reinforced nylon plastic or an ABS plastic, or a polypropylene or other similar thermoplastic or thermoset materials. Mirror casing **12** preferably includes a front bezel **12***a*, which extends around a rearward facing opening **12***a*' (FIG. **2**) of casing **12** and around a peripheral portion of reflective element **14**. As used in this application, the terms rearward facing and forward facing are used to define directions relative to a vehicle when the mirror assembly is mounted in the vehicle. Rearward facing means the object is facing to the rear of the vehicle towards the driver and occupants of the vehicle. Forward facing means that it is facing forward of the vehicle towards the windshield and so is typically (but not always) not substantially visible to the driver. Bezel **12***a*, which is formed separately from casing **12**, is preferably molded from a resinous plastic material similar to casing **12**. It should be understood that casing **12** may include a retaining rim in lieu of separate bezel **12***a*.

Rear surface **13** of casing **12** includes a recessed area **13***a* in which is disposed a mounting boss **15** and ball member **15***a* on which support arm **16** is mounted to enable the mirror assembly **10** to be releasably secured via bracket **17** to the vehicle windshield. Alternately, casing **12** may include a socket for receiving a ball member from support arm **16**. Reference is made to U.S. Pat. No. 4,930,742 for one example of a preferred break-away mounting. Another example of such a coupling is disclosed in commonly assigned U.S. Pat. No. 5,100,095 to Haan et al. An alternate method of securing support **16** is by attaching support **16** to a header, for example of the type disclosed in U.S. Pat. Nos. 5,487,522; 5,615,857; or 5,671,996; which are commonly assigned to Donnelly Corporation, and which are herein incorporated by reference in their entireties. U.S. Pat. No. 5,487,522 discloses a mirror support bracket and illustrates a bracket which can be used on either a header or windshield mounted mirror assembly. In the illustrated embodiment, a conventional mounting button is adhered to the windshield surface by a layer of conventionally known metal to glass adhesives such as polyvinyl butyral available from Monsanto Company of St. Louis, Mo. or by a silicone adhesive or the like.

Reflective element **14** preferably comprises a variable reflectance element, such as an electro-optic element. In most preferred form, reflective element **14** comprises an electrochromic mirror element, for example one of several types of electrochromic mirror elements, such as an element of the electrochemichromic type which is disclosed in U.S. Pat. No. 5,140,455, or the solid-state type such as disclosed in, for example, U.S. Pat. No. 4,712,879, U.S. Pat. No. 5,910,854, and U.S. patent application Ser. No. 08/238,521, filed Mar. 5, 1994, by Varaprassad et al. now U.S. Pat. No. 5,668,663, all commonly assigned with the present application to Donnelly Corporation of Holland, Mich., the disclosures of which are herein incorporated by reference in their entireties. Other suitable electrochromic elements are described in U.S. Pat. Nos. 5,151,816 and 5,142,40, the disclosures of which are incorporated by reference herein.

Mirror assembly **10** may house a plurality of electrical or electronic devices, such as antennas, including global positioning system (GPS) or cellular phone antennas, such as disclosed in U.S. Pat. No. 5,971,552, a communication module, such as disclosed in U.S. Pat. No. 5,798,688, displays such as shown in U.S. Pat. No. 5,530,240 or in U.S. pending application Ser. No. 09/244,726, filed Feb. 5, 1999, and application entitled "REARVIEW MIRROR ASSEMBLY WITH ADDED FEATURE MODULAR DISPLAY" filed Nov. 24, 1999, by Timothy Skiver et al., attorney Docket No. DON01 P-702, now U.S. Pat. No. 6,329,925, blind spot detection systems, such as disclosed in U.S. Pat. Nos. 5,929,786 or 5,786,772, transmitters and/or receivers, such as garage door openers, a digital network, such as described in U.S. Pat. No. 5,798,575, a high/low head lamp controller, such as disclosed in U.S. Pat. No. 5,715,093, a memory mirror system, such as disclosed in U.S. Pat. No. 5,796,176, a hands-free phone attachment, a video device for internal cabin surveillance and/or video telephone function, such as disclosed in U.S. Pat. Nos. 5,760,962 and 5,877,897, a remote keyless entry receiver, map lights, such as disclosed in U.S. Pat. Nos. 5,938,321; 5,813,745; 5,820,245; 5,673,994; 5,649,756; or 5,178,448, microphones, such as disclosed in U.S. patent applications Ser. No. 09/361,814, filed Jul. 27, 1999, now U.S. Pat. No. 6,201,642, 09/396,179, filed Sep. 14,1999, and now U.S. Pat. No. 6,278,377, and 09/199,907, filed Nov. 25, 1998, speakers, a compass, such as disclosed in U.S. Pat. No. 5,924,212, seat occupancy detector, a trip computer, an ONSTAR System or the like, with all of the referenced patents and applications com-

monly assigned to Donnelly Corporation, the disclosures of which are herein incorporated by reference in their entireties.

Referring to FIG. **2**, mirror assembly **10** preferably includes a circuit board **18**, which includes electronic or electrical circuitry for actuating the variable reflectance of reflective element **14** and for operating other electrical or electronic functions supported in rearview assembly **10**. Circuit board **18** may support, for example, light emitting diodes (LED's) for illuminating indicia on display elements **12***b*, **12***c* or **12***c*' provided on chin of bezel **12***a* or display areas provided on reflective element **14**, or map or dash board lights **540**, **542** (shown in FIG. **20**). Circuit board **18** may be independently supported from reflective element **14** or in casing **12** or may be mounted to reflective element's rear surface **14***a* on a separate plate or may be directly adhered to the rear surface by a suitable adhesive. Reference is made to U.S. Pat. Nos. 5,671,996 and 5,820,245, the disclosures of which are herein incorporated by reference in their entireties. Though the illustrated embodiment illustrates the displays and/or buttons provided at the chin of the mirror housing bezel **12***a*, it should be understood that one or more of these buttons or displays may be located elsewhere on the mirror assembly or separately in a module, for example of the type disclosed in U.S. patent application Ser. No. 09/244,726 entitled "REARVIEW MIRROR ASSEMBLY INCORPORATING VEHICLE INFORMATION DISPLAY", filed by Jonathon E. DeLine and Niall R. Lynam, now U.S. Pat. No. 6,172,613, which is assigned to Donnelly Corporation of Holland, Mich., the disclosure of which is herein incorporated by reference in its entirety.

Referring to FIG. **3**, casing **12** includes a storage space which is provided by a cavity or recess **20** formed in bottom wall **22** of casing **12**. Mounted in cavity **20** is a pendent accessory **24**, which is preferably mounted in cavity **20** for movement between a fully retracted position (FIG. **8**) in which a lower surface **24***a* of pendent accessory **24** generally follows the contour of casing **12** and is preferably substantially flush with a lower outer surface **22***a* of lower wall **22** of casing **12**. In the illustrated embodiment, pendent accessory **24** is mounted in cavity **20** on an extendible support arm **26** so that dependent accessory **24** may be moved between its retracted and extended positions. For example, support arm **26** may comprise an extendable jack arm or spring-loaded telescoping arm or the like such as is known in the art. As best seen in FIG. **6**, support arm **26** includes a ball joint **34** which extends into a receiving structure **36**, for example a socket structure, provided in housing **28**. In this manner, display accessory **24** is pivotally mounted to support arm **26** to permit repositioning of the display accessory about ball **34**. Thus, pendent accessory **24** can be repositioned for easy access or viewing by the driver of the vehicle or by a passenger of the vehicle other than the driver. While in the illustrated embodiment pendent accessory **24** is illustrated as being positioned offset from the center of mirror case, it should be understood that pendent accessory may be centrally located or located on a side of the case. Also, while illustrated in the Figures as an accessory that extends downwards from the bottom of the rearview mirror assembly (i.e. towards the vehicle floor) when mounted in the vehicle, a pendent accessory can extend upwards from the top of the mirror assembly (i.e. towards the vehicle roof area) or sideways (i.e. towards the vehicle side) from either end of casing **12**.

Referring to FIGS. **3–8**, pendent accessory **24** includes a housing **28** and an element **30** which is positioned in a rearward facing opening **32** of housing **28**. Element **30** may comprise a reflective element or mirror for use by an occupant of the vehicle as a vanity mirror or as a mirror to view rear seat passengers (such as a flat, compound curvature, aspheric or convex mirror reflector) such as a baby in a baby seat. Alternately, pendent accessory **24** can form a viewing screen for a baby minder system, such as the vehicle interior monitoring system described in U.S. Pat. Nos. 5,877,897 and 5,760,962 or the rear vision system described in pending U.S. patent applications Ser. No. 09/361,814 filed Jul. 27, 1999, now U.S. Pat. No. 6,201,642, and Ser. No. 09/199,907 filed Nov. 25, 1998, and U.S. patent application Ser. No. 09/433,467 (Attorney Docket No. P-783) filed Nov. 4, 1999, entitled "VEHICLE INTERIOR MIRROR ASSEMBLY" to Patrick Heslin and Niall R. Lynam, now U.S. Pat. No. 6,326,613, all of which are incorporated by reference in their entireties herein. An interior surveillance system permits the driver of the vehicle to observe behavior or the activities of babies or children or other passengers seated in the rear seat. This is especially advantageous when the child or baby is in a rearward facing car seat, where the child or baby would ordinarily not be visible. For example, a camera, such as a CMOS or CCD camera, can be mounted to view the rear seat area of the vehicle so that the driver can view what is occurring, such as in a rear seat mounted baby seat or with a rear seat passenger such as children. Preferably, to enable viewing of the rear seat occupant or occupants even by night, the target field of view of the camera may be illuminated in a manner that provides adequate visibility for the camera to discern what is occurring in the rear seat in a darkened vehicle cabin but not illuminating in a manner that causes glare, distraction, and/or discomfort to any vehicle occupants, including the driver and/or rear seat passengers. For example, such a rear seat monitoring camera illumination is preferably achieved using directed low level non-incandescent light sources, such as light emitting diodes (LEDs), organic light emitting material, electro-illuminescent sources, and the like, and most preferably such non-incandescent sources are low power and are directed low intensity sources, such as described in U.S. Pat. No. 5,938,321 and application entitled "INTERIOR MIRROR ASSEMBLY FOR A VEHICLE INCORPORATING A SOLID-STATE LIGHT SOURCE", Ser. No. 09/287,926, filed Apr. 7, 1999, now U.S. Pat. No. 6,139,172, which are incorporated herein by reference in their entireties. The baby minder camera may be mounted as a part of the rearview mirror assembly and, most preferably, may be mounted as a part of a header, including a front header of a roof or a rear header of a roof. It may be desirable to mount a baby minder camera to the rear header of a roof when it is desirable to view rear facing child support seats. Most preferably, a plurality of at least two, more preferably at least four, and most preferably at least six LEDs (or similar low level, directed, low-current light sources such as electroluminescent sources and organic light emitting sources) are mounted with a camera (such as to form a ring around the camera) with the light projected from the individual LEDs directed to be coincident with the camera field of view and to illuminate the target area desired to be viewed. The LEDs being directed low level sources will not glare or cause discomfort to occupants when illuminated. Further, camera illumination sources can be illuminated whenever the ignition switch is on to operate the vehicle or at least when the ignition switch is placed in an "accessory on" position so that both the camera and illumination lights are operating on vehicle battery power even when parked. Alternately, the illumination lights can be operational only when the baby minder

camera is selected to be operational. While it is preferred to use non-incandescent lights, incandescent light sources can be used, most preferably high intensity, low current incandescent light sources. For example, when the camera is activated to view the rear seat or to view a baby seat or the like, the dome light in the vehicle, which typically comprises an incandescent light source, can illuminate so that the rear seat area is illuminated to assist visibility for the camera. A circuit or other device can be provided that illuminates the dome light (or a similar rear seat-illuminating interior light source such as a rail lamp or the like) whenever the camera is selected to view the rear seat. Optionally, the dome light or similar interior light within the interior cabin, once caused to illuminate when the camera is activated, can cease to illuminate after a determined time interval (such as 5 seconds or ten seconds or longer) under the control of a timeout circuit or device. By providing a timeout, the driver can selectively view the status of passengers in the rear seat of the vehicle by selecting a baby-minder camera or similar rear seat viewing function (such as by voice command, user-operated switch or the like). Upon selection of the camera function, whatever is being viewed on the video screen in the vehicle may be interrupted (or superimposed over or the like), the interior light in the cabin (such as the dome light) will illuminate, a timeout will initiate, and the driver (or other front-seat occupant) can view the rear seat status for the duration of the timeout. Once the timeout elapses, the interior light ceases to illuminate, and preferably, the camera ceases to be activated and the video screen reverts to its pre-event status

Alternately, element **30** may comprise an information display element, in which element **30** conveys information to the vehicle operator and/or other occupants of the vehicle or may be a video screen or the like. For example, pendent accessory **24** may comprise a personal communication device, such as a PALM organizer or the like, including a video screen, preferably a touch sensitive video screen such as PALM Pilot™ such as is available from 3COM, Corp. or the like, which is adapted for input by the touch of a human finger or stylus. In which case, as described in reference to the following embodiments, assembly **10** may include an accessory attachment member, for example such as attachment member **532** (FIG. **20**), **756**, (FIG. **24**), for holding a stylus pen which interacts with pendent assembly **24**. Optionally, the stylus is tethered to the mirror assembly, for example a coiled tether or a retractable tether or by other conventional means.

Display element **30** may perform a single display function or multiple display functions, such as providing indication of an additional vehicle function or functions, for example a compass mirror display function, a temperature display function, a tire pressure/status display function, a status of inflation of tires display function, computer display including e-mails and INTERNET access, a passenger air bag disabled display function, an automatic rain sensor operation display function, telephone dial information display function, highway status information display function, blind spot indicator display function, or the like. Such displays may be an alpha-numeric display or a multipixel display, and may be fixed or scrolling. In addition, display element **30** may comprise a television screen and/or video screen. Display element **30** may comprise a generally planar element or may comprise a convex element. Alternately, display element **30** may be separately formed and include tabs or receiving structures on either side adapted to fit within receiving structures or tabs, respectively, formed in the inside surfaces of housing **26** for assembly after molding of housing **26**.

Pendent accessory **24** optionally includes a second circuit board **31** (FIG. **3**), which is typically mounted adjacent and behind display element **30**, which supports light emitting sources, such as light emitting diodes to provide back lighting of display element **30**. Light emitting diodes provide low level non-incandescent white light for illuminating indicia on display element **30**. However, it should be understood that other LED's providing light and colors other than white, such as amber, red, blue, or the like may be used. Alternately, other light emitting elements can be used to display information on display element **30**, such as incandescent displays, vacuum fluorescent displays, electro-illuminescent displays, light emitting diode displays, cathode ray tube displays, field emission displays, E-ink displays, or organic emitting polymer displays or the like. Examples of displays may be found in application entitled "REARVIEW MIRROR ASSEMBLY INCORPORATING VEHICLE INFORMATION", Ser. No. 09/244,726, filed Feb. 5, 1999, by Jonathan DeLine and Niall R. Lynam, now U.S. Pat. No. 6,172,613, or U.S. Pat. No. 5,530,240, and U.S. Pat. No. 6,326,613 (Attorney Docket No. P-783) filed Nov. 4, 1999, entitled "VEHICLE INTERIOR MIRROR ASSEMBLY" to Patrick Heslin and Niall R. Lynam, commonly assigned to Donnelly Corporation, which are herein incorporated by reference in their entireties. Alternately, circuit board **31** may also share components and provide circuitry for other electrical components in mirror assembly **10**, thus illuminating the need for mounting such circuitry within the rearview mirror assembly housing itself.

As noted previously, pendent accessory **24** may also incorporate an in-vehicle train approaching warning system. Such a train approaching warning system alerts the driver of the vehicle of the eminent arrival of a train at a railroad crossing. Such a warning system can activate audible and/or visual alarms in the vehicle if a train is approaching. Such train warning displays may override any existing displays so that the driver is fully alert to any potential hazard. Vehicle to road-side communication antennas can be attached to railroad signs, crossing barriers, and the like and can transmit to antennas mounted in the vehicle located such as within assembly **10** or within an interior cabin trim item or side exterior rearview mirror assembly. One such track side communication system is available form Dynamic Vehicle Safety Systems of Amarillo, Tex., which detects signals from trains approaching a crossing and transmits these signals along the road to forewarn of a railroad crossing ahead.

It is also possible to incorporate low level console or instrumentation lighting for vehicles in assembly **10** by fitting a low level non-incandescent light emitting light source such as a light emitting diode for illuminating an instrument panel or console as disclosed in commonly assigned U.S. Pat. No. 5,671,996, the disclosure of which is hereby incorporated by reference. In this embodiment, a single instrument light **13** may be provided on an opposed end of mirror casing **12** and may include a variety of emitting sources such as high intensity amber and reddish orange light emitting diode sources, such as solid state light emitting diode LED sources utilizing double hydro junction AlGaAs/GaAs Material Technology such as very high intensity red LED lamps T/1•(5 mm) HLMP-4100/4101 available from Hewlett Packard Corporation of Pallo Alto, Calif., or transparent substrate aluminum indium gallium phosphide (AlInGaP) Material Technology, commercially available from Hewlett Packard Corporation, of Pallo Alto, Calif. Also, blue or white LEDs can be used or a combination of individual different colored diodes can be used with the

color mixing therefrom to form a desired color. Optionally, a plurality of LEDs such as a cluster of four, six, eight or the like LEDs can be used to target and illuminate a local area for higher illumination at that area, such as may be useful in a map light (most preferably illuminating the target area with white light). The concepts of this present invention can be used with other interior rearview mirror assemblies which are equipped with a variety of features and accessories, such as a home access transmitter, a high/low (or daylight running beam/low) headlamp controller, a hands free phone attachment, a video device, such as a video camera for internal cabin surveillance and/or video telephone function, a remote keyless entry receiver, a compass, a seat occupancy detection, multiple reading lights, a trip computer, an intrusion detector, and the like. Display element **30** may also include a compass/temperature and a clock display, fuel level display, and other vehicle status and other information displays.

As it would be understood by those skilled in the art, the electrically operated display and other devices optionally provided in pendent accessory **24** are conveniently connected to the electrical system of the vehicle in which the present invention is mounted via electrical wiring **31***a* (FIG. **3**). The use of pendent accessory **24** with display element **30** comprising the instant invention in conjunction with electrically operated interior rearview mirrors has the further advantage of permitting electrical coupling of the display element to the power supply of the vehicle by the pre-existing wire harnesses serving the rearview mirror. Thus, the electrical coupling of the display element can be by direct connection with the existing wire harness or in parallel through an adapter plug. This particularly facilitates a retrofit such as might occur as in the after-market or at a dealership that is a result of an option selection. Alternately, the interior mirror assembly can include a vehicle power socket, connected to the vehicle ignition system or battery electrical system, (such as the cigarette lighter type socket conventional on many automobile) into which other accessories can be plugged (such as in FIG. **25**). For example, a "cigarette-lighter" type of socket can be provided at the rear or at the bottom of the interior mirror case, into which a vehicle occupant can plug an electrically operated (typically 12V) accessory such as a radar detector or the like.

Pendent accessory housing **28** preferably comprises a similar material to casing **12** so that when element **30** is moved to its retracted position as shown in FIG. **8**, the lower surface **28***a* of housing **28** will generally match the surface and color of mirror casing **12**. Referring to FIG. **7***a*, support arm **26** preferably comprises a spring loaded support arm and includes an elongated shaft **40** on which ball member **34** is mounted. As best seen in FIGS. **7** and **8**, housing **28** may include a recessed surface **38**, for example an elongated depression which provides tactile identification of housing **28** and when pushed releases pendent accessory **24** from its retracted position so that pendent accessory **24** can be extended and retracted from the storage space and optionally swiveled and/or universally pivoted about ball member **34** to a desired orientation. Similarly, when returned to its recessed position or storage space, recessed surface **38** is pressed to relatch pendent accessory **24** in its retracted position within casing **12**. Such mechanisms are conventional and well known. In this manner, the occupant of the vehicle can quickly selectively insert the pendent accessory into its storage space within case **12** and quickly extend or remove the accessory from its storage space for personal use or use by another occupant of the vehicle.

As best seen in FIG. **6**, housing **28** of display assembly **24** includes one or more recessed gripping surfaces **42** and **44** to permit easy adjustment of the position of housing **28** about support arm **26**. In the illustrated embodiment, surfaces **42** and **44** comprise round indentations, but it should be understood that other shapes may be used. Furthermore, surfaces **42** and **44** provide tactile identification of housing **28** to permit quick adjustment with minimal distraction to the driver.

By selectively and extensibly positioning a display element or a vanity mirror below casing **12** on the end of casing **12** closer to the passenger side of the vehicle, as shown in FIGS. **3–8**, the obstruction to the vehicle operator is minimized. Furthermore, the accessory is located in a position which is well known to the driver and, therefore, requires little concentration to use, and such movement in reaching for the accessory is almost automatic. Such automatic actions require far less attention than actions requiring new movement and will consequently minimize the distraction to the driver as well. Optionally, pendent accessory **24** may be provided with other electrical or electronic features or accessories, such as previously described in reference to mirror assembly **10**.

Referring to FIG. **8**A, mirror assembly **10'** may include a video screen **13'**. In the illustrated embodiment, display screen **13'** is placed to the side of reflector **14'** in casing **12'**. In preferred form, display screen **13'** is separate from reflector **14'**. Most preferably, video screen **13'** is canted toward the driver when mirror housing **12'** is in its normally adjusted position. Video screen **13'** can display output from such as a rear vision back-up camera, such as disclosed in applications Ser. No. 09/199,907, filed Nov. 25, 1998, and 09/361,814 filed Jul. 27, 1999, now U.S. Pat. No. 6,201,642, commonly assigned to Donnelly Corporation, the disclosures of which are herein incorporated by reference in their entireties, a baby minder camera, such as the vehicle interior surveillance camera disclosed previously, vehicle instrument status, such as vehicle information display, such as information relating to fuel gauge levels and the like. Referring to FIG. **8**B, mirror assembly **10"** may include a pair of screen displays **13***a*" and **13***b*". In the illustrated embodiment, displays **13***a*" and **13***b*" are positioned in case **12"** at opposed sides adjacent reflective element **14"**. Preferably, displays **13***a*" and **13***b*" are similarly positioned behind bezel **12***a*" so that displays **13***a*" and **13***b*" generally lie in the same plane as reflective element **14"**. Optionally, cameras (not shown) may be mounted in case **12"** on either side as part of the interior mirror assembly, with one camera feeding display element **13***a*" and the other camera feeding display element **13***b*".

Referring to FIGS. **9–14**, the numeral **110** designates a second embodiment of the rearview mirror assembly of the present invention. Mirror assembly **110** includes a mirror casing or housing **112**, bezel or retaining rim **112***a*, and a reflective element **114** supported in mirror housing **112**. The material of housing **112** is similar to housing **12**; therefore, reference is made to housing **12** for further details of suitable materials. Similar reference is made to the first embodiment for further details of mirror reflective element **114**.

Extending rearwardly from housing **112** is a mirror support arm **116**, which mounts mirror housing **112** by way of a mounting bracket or mirror mount similar to bracket **17** onto a mirror mounting button (not shown) provided on most conventional windshields to form a break-away assembly. Reference is made to support arm **16** and bracket **17** for details of one preferred support arm and preferred mounting arrangements.

As best seen in FIGS. **10–13**, housing **112** includes a storage space **122** for holding or storing an accessory **124**.

In the illustrated embodiment, accessory **124** comprises a light assembly, such as a flashlight assembly. However, accessory **124** may comprise a cellular phone, a phone module, pager, INTERNET connector, or the like. In the case of docking a telecommunication device such as a phone or a pager, the mirror assembly is preferably adapted to connect to the telecommunication device such as a phone in a manner such that the vehicle control system will recognize the phone and, optionally, direct incoming phone calls to speakers, which may be located in the mirror assembly or elsewhere in the vehicle. In this manner, the dockable phone may provide removable hands-free phone function. Furthermore, in one form, the phone may automatically be activated by the occupant's voice or a switch or by the docking of the phone onto the mirror assembly. In this manner, the phone may be removed when the occupant exits the car for normal remote use or may be docked for hands-free use.

In preferred form, storage space **122** is provided on forward facing side or back wall **113** of housing **112** and comprises a recessed area which extends from an upper wall **112***a* of housing **112** to a lower wall **112***b* of housing **112**. In this manner, storage space **122** is hidden from view from the occupant of the vehicle, but readily accessible by the driver or other occupants of the vehicle. In preferred form, light assembly **124** includes a housing **126**, and a removable lens **128** which form a unitary body **130**. Body **130** preferably includes a suitable battery or batteries, which may be rechargeable. Body **130** is preferably commensurate in shape with the outer surface **131** of housing **112** such that when light assembly **124** is mounted in storage space **122**, the outer surfaces **130***a* of unitary body **130** follow the contours of housing **112** and, further, the outer surfaces **130***a* of unitary body **130** are generally flush with surface of housing **112** surrounding storage surface **122**. In this manner, when light assembly **124** is mounted to housing **112**, light assembly **124** forms a unitary body having matched and corresponding contours which are flush with housing **112**. As would be understood by those skilled in the art, housing **126** supports a bulb and a battery, preferably a rechargeable battery. In preferred form, housing **126** supports a pair of battery contacts **131***a* which align with contacts **131***b* provided on casing **112** to permit quick recharging of the battery or batteries inside housing via the vehicle electrical system without the need for disassembling light assembly **124**. Alternately, the interior rearview mirror assembly may include a power source, such as a recharger, such as housing **112**, that recharges the battery or batteries in the dockable accessory, which is stored or attached thereto. As previously noted, such dockable accessories can include pagers, cellular phones, flash lights or the like. In this manner, accessory **124** can be docked for recharging. In the case of the light assembly, the light assembly can be docked for use as a map reading light or the like. When undocked, light assembly **124** may be used as a flashlight, as previously noted.

In the case of a dockable phone, housing **112** optionally includes at least one speaker and microphone, such as disclosed in U.S. patent application Ser. No. 09/382,720, filed Aug. 25, 1999, by Niall R. Lynam et al., now U.S. Pat. No. 6,243,003. When the phone is docked, the phone may be optionally connected to the vehicle system such that the vehicle system enables the speakers and microphones to provide hands-free operation of the phone. Actuation of the hands-free phone may be achieved when the phone is docked or by a separate switch mounted, for example on the dashboard or, alternately, to the interior mirror assembly.

Alternately, the phone module of a cellular or digital phone may be docked on the mirror housing such that the vehicle system couples the phone module to the speakers and microphones to provide a hands-free phone system. In this manner, the module can be quickly and easily docked and, further, removed for replacement into the phone housing.

In addition, when either the phone or phone module is docked, as cell phone calls become traceable through a global positioning system (GPS), emergency phone calls may be forwarded or routed to the correct emergency agency for that location. Since each phone has a unique identifier, GPS can identify a phone and, further, identify the location of that phone. For example, the phone or mirror assembly may include a separate emergency button which can be activated by an occupant of the vehicle to notify local emergency agencies that an occupant of the vehicle is in need for emergency assistance. For example, tracing of the phone may be incorporated into or used in conjunction with a vehicle navigation system, such as described in copending provisional application Ser. No. 60/131,593, filed Apr. 29, 1999, entitled "VEHICLE-BASED NAVIGATION SYSTEM WITH SMART MAP FILTERING, PORTABLE UNIT HOME-BASE REGISTRATION AND MULTIPLE NAVIGATION SYSTEM PREFERENTIAL USE", which is herein incorporated by reference in its entirety. Where the vehicle is equipped with a GPS system, the GPS system can monitor the movement of the vehicle, and by knowing that the vehicle has moved from one location to another, and because the GPS knows the geographic position of both locations relative to each other, the navigation system can determine the directional heading of the vehicle, and furnish this as a compass heading signal for display as a compass display such as at the interior mirror assembly.

A variety of electrical and electronic features can be incorporated into the rearview mirror assembly, such as those disclosed in U.S. patent application Ser. No. 09/433,467 (Attorney Docket No. P-783) filed Nov. 4, 1999, entitled "VEHICLE INTERIOR MIRROR ASSEMBLY" to Patrick Heslin and Niall R. Lynam, now U.S. Pat. No. 6,326,613, commonly assigned to Donnelly Corporation, which is herein incorporated by reference in its entirety. For example, a microphone or a plurality of microphones may be incorporated, preferably to provide hands-free input to a wireless telecommunication system such as the ONSTAR™ system in use in General Motors vehicles. Most preferably such microphones provide input to an audio system that transmits and communicates wirelessly with a remote transceiver, preferably in voice recognition mode. Such systems are described in U.S. Pat. No. 6,243,003, the disclosure of which is hereby incorporated by reference herein.

In this regard it may be desirable to use audio processing techniques such as digital sound processing to ensure that vocal inputs to the vehicular audio system are clearly distinguished from cabin ambient noise such as from wind noise, HVAC, and the like. Digital sound processing techniques, as known in the acoustics arts and such as are disclosed in U.S. Pat. No. 4,959,865 entitled "A METHOD FOR INDICATING THE PRESENCE OF SPEECH IN AN AUDIO SIGNAL", issued Sep. 25, 1990, to Stettiner et al. (the disclosure of which incorporated by reference herein), are particularly useful to enhance clarity of vocal signal detection when a single microphone is used, located in the interior mirror assembly such as in casing **12**, as part of a vehicular wireless communication system such as General Motors' ONSTAR™ system. Use of digital signal process-

ing and a single mirror-mounted microphone (such as is described in U.S. patent application Ser. No. 09/396,179, filed Sep. 14,1999, entitled "INDICATOR FOR VEHICLE ACCESSORY", now U.S. Pat. No. 6,278,377, the disclosure of which is incorporated by reference herein) is particularly advantageous for economical achievement of clear and error-free transmission from the vehicle, while operating along a highway, to a remote receiver, particularly in speech-recognition mode. Although advantageous with a single mirror-mounted microphone (or for a microphone mounted elsewhere in the vehicle cabin such as in the header region), digital sound processing is also beneficial when multiple microphones are used. For example a first microphone, mounted in the mirror casing **12**, can be directed principally towards the mouth of the driver and a second microphone can be directed so as to detect vehicular ambient noise such from HVAC, windshield vibration etc. A signal indicative of the ambient noise can be generated by processing the output of the second microphone, and this signal can be subtracted from a signal generated by processing the output of the first microphone to form a signal substantially representative of the speech picked up by the first microphone. Techniques and circuitry to achieve such speech enhancement are known in the acoustics art, such as are disclosed in U.S. Pat. No. 5,381,473, issued Jan. 10, 1995, entitled "NOISE CANCELLATION APPARATUS" to D. Andrea, the disclosure of which is hereby incorporated by reference herein. Also, noise cancellation techniques such as destructive interference can advantageously be used, whereby the signal as picked up by the microphone is processed, the human vocal signal is distinguished from the noise signal, and whereby the noise signal is fed back 180 degrees out of phase with itself in order to cancel out the noise by destructive interference and so enhance the vocal signal to background noise ratio. Digital sound processing is preferably accomplished using a microprocessor. A variety of microprocessors can be used such as a single-chip microcomputer optimized for digital signal processing and high speed numeric processing such as the ADSP-218x digital signal processors such as the ADSP-2186 single-chip microcomputer, which integrates 40 kilobytes of on-chip memory (including 8K words (24-bit) of program RAM and 8K words (16-bit) of data RAM) along with serial ports, DMA ports, timers, I/O lines, and interrupt capabilities. The ADSP-2186 microcomputer and the ADSP-218x digital signal processors are available from Analog Devices, Inc., Norwood, Mass. In a vehicle wireless communication system installed in a vehicular cabin, location of the microphone(s) in the interior mirror assembly (such as in casing **12**) is advantageous. For digital sound processing of the sound signal detected by the mirror-mounted microphone, an analog to digital converter can be also located at the interior rearview mirror assembly (such as in casing **12**) that converts the analog microphone sensor output to digital form. The microprocessor for performing the digital sound processing algorithms and analysis can also be located at the interior rearview mirror location (such as in casing **12**). Alternately, the microprocessor performing the digital sound processing analysis can be located elsewhere in the vehicle cabin (such as in the vehicle dash, preferably sharing circuitry with other functions of the vehicle wireless communication system), and with the digitized output signal from the A/D converter linked to the mirror-mounted microphone being fed to the microprocessor via a wire link or via a car area network (a.k.a. controlled area network) or via a vehicular local area network or via an in-cabin, short-range radio transmission network such as via the BLUETOOTH system described below.

Preferably the microphone interfaces to an audio system that includes an analog to digital converter and/or a digital to analog converter for the purpose of converting the analog output of the microphone to a digital signal for input to a digital sound processor and for conversion of the digital output of a digital sound processor to an analog signal for wireless transmission to a remote transceiver. Digital sound processing techniques may be used to enhance the vocal signal to background noise discrimination ratio. Also, both analog and digital audio filtering techniques can be used to enhance the vocal to background noise ratio, and so assist clarity of transmission and/or receipt at a remote receiver and so improve accuracy in voice recognition mode. Also, physical techniques such as sound insulation, acoustic wave guides, angling of microphones to selectively detect speech versus background noise, use of a directed microphone directed to a potential human speaker in conjunction with a more omnidirectional microphone/sensor microphone intended to detect background noise can be used. Techniques useful to enhance vocal to noise signal ratio include use of analog and/or digital low-pass filtering to limit examination of signal content to, for example, less than 1000 Hz. or less than 750 Hz. (and so help distinguish vocal signal from noise signals), include use of syllabic rate filtering such as is described in U.S. Pat. No. 4,484,344, include use of a hangover time function such as disclosed in U.S. Pat. No. 4,187, 396, include use of a digital sound switch and dual threshold detection such as disclosed in U.S. Pat. No. 4,052,568 and include noise canceling microphones and techniques such as disclosed in U.S. Pat. No. 5,909,495 (the disclosures of the above cited U.S. patents are incorporated by reference herein). The vehicular microphone can be voice-activated such as by a digital voice operated switch such as is disclosed in U.S. Pat. No. 5,251,263, the disclosure of which is incorporated by reference herein. An adaptive signal processing system can be used to enhance vocal to noise ratio. Adaptive noise cancellation techniques can be used to produce a speech indication signal in response to detection of voice information in the presence of background vehicular noise such as are described in "Adaptive Noise Canceling: Principles and Applications" Proc. IEEE, vol. 63, pp. 1692–1716, December 1975 by B. Widrow et al., and "Adaptive Noise Canceling for Speech Signals", IEEE Trans. Acoust. Speech and Sig. Proc., vol. ASSP-26, No. 5, October 1978, by M. Sambur, and U.S. Pat. No. 5,033,082 entitled "COMMUNICATION SYSTEM WITH ACTIVE NOISE CANCELLATION", issued Jul. 16, 1999, to Eriksson et al, and U.S. Pat. No. 5,251,263 entitled "ADAPTIVE NOISE CANCELLATION AND SPEECH ENHANCEMENT SYSTEM AND APPARATUS THEREOF", issued Oct. 5, 1993, to Andrea et al, the disclosures of which are hereby incorporated herein in their entirety. Mechanical cancellation of ambient noise can be provided, as can a noise canceling pressure gradient microphone, preferably in conjunction with acoustic ports including voice and noise ports. Such a system is disclosed in World Patent publication WO 9817046 A1 to D. Andrea, published Apr. 23, 1998, and entitled "NOISE CANCELING ACOUSTICAL IMPROVEMENT TO WIRELESS TELEPHONE OR CELLULAR PHONE", the disclosure of which is hereby incorporated by reference. A pressure gradient microphone, as known in the acoustic arts, can be used to reduce the background vehicular noise as detected by a vehicular mirror-mounted microphone, or alternatively, an acoustic feedback system, preferably including compensation filters, can be used. Also, closed-loop active noise reduction techniques and other noise reduction techniques can be used

such as disclosed in U.S. Pat. Nos. 2,972,018; 3,098,121; 4,833,719; 4,878,188; 4,977,600; and 5,138,664, and in Japanese Patent Abstract No. 3-169199, the disclosures of which are incorporated by reference herein. An adaptive noise cancellation and speech enhancement system and apparatus suitable to use a vehicle with a mirror-mounted microphone is disclosed in U.S. Pat. No. 5,251,263, the disclosure of which is incorporated by reference herein. This adaptive noise cancellation system is particularly beneficial when multiple vehicular microphones are used. Other noise cancellation techniques useful for vehicular microphones, and particularly for mirror-mounted microphones that provide in put to wireless communication systems, particularly in voice-recognition mode, are disclosed in U.S. Pat. Nos. 5,732,143; 5,825,897; and 5,673,325, the disclosures of which are incorporated by reference herein.

Also, an indicator such as disclosed in U.S. patent application Ser. No. 09/396,179, filed Sep. 14, 1999, entitled "INDICATOR FOR VEHICLE ACCESSORY", now U.S. Pat. No. 6,278,377, the disclosure of which is incorporated by reference herein, can be incorporated into the interior mirror assembly that indicates to the driver and/or passengers that speech being detected by a mirror-mounted microphone (or a microphone located elsewhere in the vehicle cabin such as in a header console) is being transmitted and received clearly and error-free by a remote wireless receiver such as an ONSTAR™ operator or a voice recognition system such as is common when calling airlines, services and the like. For example, the signal as wirelessly transmitted from the audio system in the vehicle to the remote receiver may be echoed or retransmitted back to the vehicle where, upon receipt of the retransmitted signal at the vehicle, an in-vehicle voice recognition system interprets the as-received retransmitted signal and either speaks the words/numbers interpreted to the driver for confirmation, or displays the message as received in the vehicle after retransmission so the driver/passenger receives and audible and/or visual indication of what the remote voice recognition transcriber is receiving. If the in-vehicle voice recognition system/in-vehicle indicator is not indicating the expected message, then the driver/passenger will know that the original transmission to the remote voice recognition system was not clear and contained error, and take appropriate action such as repeating the message. By retransmitting back to the vehicle, and confirming in-vehicle, the vehicle occupants can be assured that wireless transmission to the like of a voice recognition system is clear and error-free.

The interior mirror assembly may include a variety of information displays such as a PSIR (Passenger Side Inflatable Restraint) display, an SIR (Side-Airbag Inflatable Restraint), compass/temperature display, a tire pressure status display or other desirable displays, such as those described in U.S. patent application Ser. No. 09/244,726, filed Feb. 5, 1999 now U.S. Pat. No. 6,172,613, the disclosure of which is hereby incorporated by reference herein.

For example, the interior rearview mirror assembly may include a display of the speed limit applicable to the location where the vehicle is travelling. Conventionally, speed limits are posted as a fixed limit (for example, 45 MPH) that is read by the vehicle driver upon passing a sign. As an improvement to this, an information display (preferably an alphanumerical display and more preferably, a reconfigurable display) can be provided within the vehicle cabin, readable by the driver, that displays the speed limit at whatever location on the road/highway the vehicle actually is at any moment. For example, existing speed limit signs could be enhanced to include a transmitter that broadcasts a local speed limit signal, such signal being received by an in-vehicle receiver and displayed to the driver. The speed limit signal can be transmitted by a variety of wireless transmission methods, such as radio transmission, and such systems can benefit from wireless transmission protocols and standards, such as the BLUETOOTH low-cost, low-power radio based cable replacement or wireless link based on short-range radio-based technology. BLUETOOTH enables creation of a short-range (typically 30 feet or so although longer and shorter ranges are possible), wireless personal area network via small radio transmitters built into various devices. For example, transmission can be on a 2.45 gigahertz band, moving data at about 721 kilobits per second, or faster. BLUETOOTH, and similar systems, allow creation of an in-vehicle area network. Conventionally, features and accessories in the vehicle or wired together. Thus, for example, an interior electrochromic mirror and an exterior electrochromic mirror is connected by at least one wire in order to transmit control signal and the like. With BLUETOOTH and similar systems, control commands can be broadcast between the interior mirror and the exterior mirror (and vice versa) without the need for physical wiring interconnecting the two. Likewise, the two exterior mirror assemblies on the vehicle can exchange, transmit and/or receive control commands/signals (such as of memory position or the like such as is described in U.S. Pat. No. 5,798,575, the disclosure of which is hereby incorporated by reference herein) via an in-vehicle short-range radio local network such as BLUETOOTH. Similarly, tire pressure sensors in the wheels can transmit via BLUETOOTH to a receiver in the interior mirror assembly, and tire pressure status can be displayed, preferably at the interior rearview mirror. In the case of the dynamic speed limit system described above, preferably, the in-vehicle receiver is located at and/or the display of local speed limit is displayed at the interior mirror assembly (for example, a speed limit display can be located in a chin or eyebrow portion of the mirror case, such as in the mirror reflector itself, such as in the cover **40**, or such as in a pod attached to the interior mirror assembly). More preferably, the actual speed of the vehicle can be displayed simultaneously with and beside the local speed limit in-vehicle display and/or the difference or excess thereto can be displayed. Optionally, the wireless-based speed limit transmission system can actually control the speed at which a subject vehicle travels in a certain location (such as by controlling an engine governor or the like). Thus, a school zone speed limit can be enforced by transmission of a speed-limiting signal into the vehicle. Likewise, different classes of vehicles can be set for different speed limits for the same stretch of highway. The system may also require driver identification and then set individual speed limits for individual drivers reflecting their skill level, age, driving record and the like. Moreover, a global positioning system (GPS) can be used to locate a specific vehicle, calculate its velocity on the highway, verify what the allowed speed limit is at that specific moment on that specific stretch of highway, transmit that specific speed limit to the vehicle for display (preferably at the interior rearview mirror that the driver constantly looks at as part of the driving task) and optionally alert the driver or retard the driver's ability to exceed the speed limit as deemed appropriate. A short-range, local communication system such as envisaged in the BLUETOOTH protocol finds broad utility in vehicular applications, and particularly where information is to be displayed at the interior mirror assembly, or where a microphone or user-interface (such as buttons to connect/interact with a remote wireless receiver) is to be located at

the interior (or exterior) rearview mirror assembly. For example, a train approaching a railway crossing may transmit a wireless signal such as a radio signal (using the BLUETOOTH protocol or another protocol) and that signal may be received by and/or displayed at the interior rearview mirror assembly (or the exterior sideview mirror assembly). Also, the interior rearview mirror and/or the exterior side view mirrors can function as transceivers/display locations/interface locations for intelligent vehicle highway systems, using protocols such as the BLUETOOTH protocol. Protocols such as BLUETOOTH, as known in the telecommunications art, can facilitate voice/data, voice over data, digital and analogue communication and vehicle/external wireless connectivity, preferably using the interior and/or exterior mirror assemblies as transceiver/display/user-interaction sites. Electronic accessories to achieve the above can be accommodated in casing **12**, and/or elsewhere in the interior mirror assembly (such as in the housing disclosed in U.S. patent application Ser. No. 09/433,467 (Attorney Docket No. P-783) filed Nov. 4, 1999, entitled "VEHICLE INTERIOR MIRROR ASSEMBLY" to Patrick Heslin and Niall R. Lynam, now U.S. Pat. No. 6,326,613.

Providing a docking capability and/or storage space for the like of a cellular phone has several advantages, especially when used in conjunction with an in-vehicle microphone and ONSTAR™ or similar vehicular wireless communication system. In such a system, the vehicle typically comes equipped from the original equipment manufacturer (typically an automaker such as General Motors, Ford or the like) with an excellent radio/CD/tape audio system with good speakers, amplifiers, graphic equalizers etc. Coupled with a high quality microphone, the quality and power of the vehicular audio system typically exceeds that found in a hand-held cellular phone. Also, when the vehicle is equipped with an ONSTAR™ system, the vehicle is typically already provided with a quality wireless transmitting/receiving antenna, and often with a GPS system as well. Thus, providing a docking function (preferably at the interior rearview mirror but at other location such as the header console or the like is contemplated) has advantages beyond providing a recharging power source to the personal hand-held phone (or pager or the like). Once docked (which encompasses linking the portable unit to the interior mirror assembly via a cable or via a cable-less connection such as by a remote IR link), the driver and/or passengers can optionally and preferably make and receive telephone calls via their docked personal phone, but with the audio system being provided by the in-vehicle, pre-existing, speakers, amplifiers, microphone etc. Preferably, whenever a phone call is initiated, any radio station or other music or play though the vehicle audio system is turned off for the duration of the phone call. Also, the ringing tone indicating a call is being received at the docked personal phone preferably sounds through the car audio system so that it is audible even if the car audio is playing music or the like. In this manner, the driver and/or passenger can be contacted via their personal cellular phone number while driving on the highway. As regulations increase forbidding the use cellular phones while driving, unless hands-free, use of the existing vehicle audio system to make and receive calls is advantageous as quality of sound is enhanced thereby. The present invention contemplates a personal cellular phone having a detachable module that includes the circuitry that makes that phone specific and unique in terms of caller identifier. Thus, when the driver, for example, enters the vehicle, he/she detaches the identifier module from the personal mobile hand-held cellular phone and plugs it to a receiving portion of the in-vehicle wireless transmission system (that may comprise an antenna, speakers, an amplifier, a microphone, a keypad etc). Once the identifier module is plugged into the vehicular wireless communication system, the vehicle wireless communication system now emulates the hand-held personal phone, allowing calls be made or received at the personal phone number of the owner of the personal cellular phone. All such in-vehicle communication can be in voice-recognition mode, or a keypad can be provided for the driver to key in a phone number. Although illustrated here for a cellular phone, these concepts have broad application to like of hand-held computers and the like. Also, soon all cellular phone calls will be traceable as to the geographic location of the call. Thus, by making a call from the vehicle, the location of the vehicle is traceable by the likes of the phone service provider such as MCI, SPRINT and the like. Thus, the geographic location of the vehicle can be identified by the driver placing a call. A user-operated "SOS" button can be provided in the vehicle such that, when activated, a cellular phone call is initiated, this call is directed to the cellular phone company, the cellular phone company identifies the vehicle's location, and the cellular service provider, once the vehicle's location is identified, automatically connects the phone to the emergency "911" service particular to the location of the vehicle. Thus, no matter where the call is made from, the driver of the vehicle is automatically connected to the emergency services.

Also, where a dockable accessory is used and in other situations, the interior mirror assembly may include a recharging unit and/or a low voltage (typical less than 10 volts, such as 5 volts or lower) power source (preferably of direct current power) to power the likes of a cellular phone, lap-top computer of the like. A socket for this purpose may be provided on the mirror casing **12** (or elsewhere on the interior mirror assembly), or a powering and/or recharging cable can be stores in casing **12**, and pulled out (preferably under spring-load so as to automatically rewind) as required to power the accessory. Preferably, the recharging unit, including any associated electronic circuitry, is housed in casing **12** of the interior rearview mirror assembly.

Referring to FIG. **9**, housing **126** of light assembly **124** is preferably made from a similar material to housing **112** so that when light assembly **124** is docked or mounted to housing **112**, outer surface **126***a* of housing **126** blends with or matches outer surface **131** of housing **112**. Lens **128** preferably includes an outer surface **128***a* which is substantially continuous with outer surface **126***a* of housing **126** and further includes a rounded end portion **128***b*, which generally follows the outer periphery **112***e* of housing **112**. In this manner, when light assembly **124** is mounted to housing **112**, light assembly **124** follows the contours of housing **112** and provides a smooth substantially continuous surface with outer surface **131** of housing **112**. Examples of suitable materials for lens **128** may be found are acrylic and polycarbonate.

As best understood from FIGS. **9** and **11**, light assembly **124** optionally includes a pair of engagement surfaces **132** which provide tactile identification of assembly **124** so that assembly **124** can be quickly located without visual contact. In addition, engagement surfaces **132** provide gripping surfaces for the occupant so that light assembly **124** can be quickly disengaged from housing **112** or returned to or docked in its storage space on the rear wall or forward facing side of housing **112**.

In preferred form, storage space **122** is defined by a first generally planar recessed wall section **134** (FIG. **14**) of housing **112** which extends along an axis **136**. Axis **136** is

generally parallel to the reflective element assembly **114**. Planar surface **134** is bounded by upper and lower walls **112***b* and **112***c* and end wall **112***d* of housing **112** and further by a second planar recessed wall **138** of housing **112**. In the preferred embodiment, second planar recessed wall **138** extends at a slight angle to an axis **140** (see FIG. **9**) which is substantially orthogonal to axis **136** and to upper and lower walls **112***b* and **112***c* of housing **112**. Similar to planar wall **134**, planar wall **138** extends between upper and lower walls **112***a* and **112***b* to form with planar wall **134**, a slightly open, L-shaped configuration. In preferred form, planar wall **134** includes one or more projecting members **142** (FIG. **14**), for example bayonet type connectors, which extend outwardly from planar wall **134**. In the illustrated embodiment, planar wall **134** includes four projecting members **142** for engaging corresponding receiving structures, for example openings **144** provided on housing **126** of light assembly **124** (FIG. **13**). Receiving structures **144** are configured to receive projecting members **142** and to releasably couple light assembly **124** to housing **112**, as would be understood by those skilled in the art. Alternately, housing **112** may include receiving structures with light assembly **124** including projecting members. Other releasable couplers which may be used include rails that provide a sliding arrangement of light assembly **124** onto housing **112**. In addition, light assembly **124** may be coupled to housing **112** by Velcro or magnets or a combination of magnets and metal inserts. In this manner, light assembly **124** may be quickly and easily removed from housing **112** for use by the operator or passenger of the vehicle.

Referring to FIG. **15** and FIG. **15**A, a third embodiment **210** of the rearview mirror assembly of the present invention is illustrated. Rearview mirror assembly **210** includes a mirror casing or housing **212** and a reflective element **214**, similar to the first and second embodiments. Housing **212** is mounted to a windshield button B, which is adhered to windshield W in a conventional manner, by a break-away mounting bracket or mirror mount **217** and support arm **216**. Reference is made to support arm **16** and bracket **17** for further details. As noted in reference to the first embodiment, mirror assembly **210** may be alternately mounted to a headliner of a vehicle, as would be understood by those skilled in the art. Housing **212** includes a bezel or retaining rim **212***a* which extends around the periphery of the rearward opening of housing **212** and over a peripheral edge portion of reflective element **214**. Bezel **212***a* may optionally include one or more displays, buttons, or indicators, such as LED's, as noted in reference to the first embodiment.

In the illustrated embodiment, mirror housing **212** includes a storage space **222** for storing accessories, for example sun glasses, tools, including pocket knives or Swiss army knives, pencils, keys, coins, paper money, credit cards, pass cards, including toll cards, access cards, paperwork, such as registration or insurance papers, or the like. In addition, storage space **222** may be used for holding trash, such as scrap paper, food or candy wrappers, or the like. As used herein, "accessories" includes a wide range of objects that can be used by the driver or other occupants of the vehicle, including money, tools, including writing instruments, parking receipts, glasses, gloves, cosmetics, paper products, such as writing pads, kleenex, cleaning products, such as wipes, eye glass cleaning supplies, cards, such as business cards, credit cards, access cards, or the like. It should be understood that this list of objects is not exhaustive and merely an example of the various objects that can be stored in the mirror location. In the illustrated embodiment, storage space **222** comprises an open storage space defined by a trough-shaped recess **224** which extends into top wall **212***b* of housing **212** and which includes an access opening **222***a*. It should be understood that the shape of the storage space may be adjusted as desired; for example, recess **224** forming the storage space may be cylindrical in order to provide a storage space for a cylindrical accessory such as a cup, container, or the like. In this manner, storage space **222** provides a cup holding function. In the illustrated enbodiment, opening **222***a* extends over the full length and width of recess **222**. But, it should be understood that opening **222***a* may be reduced over either or both its length and width In addition, it should be understood that casing **112** may include a pair of recessed portions formed on opposed ends of the casing, with each of the recessed portions storing a light assembly.

Referring to FIG. **16**, recess **224** comprises a plastic trough-shaped unitary body **230** which includes side walls **232** and **234**, end walls **236** and **238**, and a bottom wall **240**. Extending around the open mouth **242** of body **230** is a lip **244** which may be formed or positioned on upper surface **228** of housing **212** to provide a tactile identification of recess **224**. Alternately, lip **244** may be formed generally flush with upper surface **228** of upper wall **212***b* such that body **230** does not create any irregularities in the outline of casing **212**. Optionally, case **212** may be molded with an opening formed in upper wall **212***b*, with the storage space **222** being separately molded and inserted into the opening of the case **212**. Preferably, the bin or tray may be adapted, such as by sizing, to have a snug fit into the opening whereby the bin or tray is removable for cleaning or substitution with alternate bin configurations. Alternately, the insert may be fixed in the opening, for example, by ultra sonically welding or by other suitable fastening methods, such as suitable adhesives, or releasable couplers such as snap fingers which are known in the art. Alternately, storage space **222** may be molded with the mirror case such that the upper wall of the mirror case is shaped so that the outer upper surface forms the bin.

Referring again to FIG. **16**, body **230** may include one or more reinforcing ribs **246**. Ribs **246** project inwardly from side walls **232**, **234** and bottom wall **240** to form generally U-shaped dividers. In the illustrated embodiment, ribs **246** define four compartments or sub-spaces **248***a*, **248***b*, **248***c*, and **248***d*, which prevent shifting of smaller articles such as coins, keys, or the like in storage space **222** or along body **230**. Furthermore, ribs **246** provide lateral support for glasses placed in body **230**.

Referring to FIG. **15**A, reflective element **214** may comprise an electrochromic element of an electrochromic element module. The electrochromic mirror element, for example, includes two substrates **214***a* and **214***b* (typically glass substrates) with an electrochromic medium **214***d* sandwiched between the substrates. The electrochromic element module preferably includes a printed circuit board (PCB) **214***c* which may be attached to its rear surface as shown in FIG. **15**A, by for example an adhesive. An example of such an arrangement as disclosed in U.S. Pat. No. 5,820,245, commonly assigned to Donnelly Corporation, which is incorporated in its entirety by reference herein. The PCB optionally includes glare sensing and ambient photo sensors and assembly electrochromic circuitry that automatically dims the reflectivity of the electrochromic mirror element when glare conditions are detected at night time when mounted in the vehicle. Alternately, the PCB may be snap connected, by a clip or otherwise attached, to a plastic plate that itself is adhered to the electrochromic element. Importantly, the electrochromic module comprising the elec-

trochromic reflective element and attached electronics, may provide scatter proofing means, and the like. Preferably, the electrochromic element module forms a relatively slim package, at its widest cross-section the package is preferably less than or equal to about 25 mm in dimension, more preferably less than or equal to about 15 mm in dimension, and most preferably less than or equal to about 8 mm in dimension. By placing, as shown in FIG. **15**A, all necessary electronics and reflector element forward in the case toward the driver, the space between the rear of the reflector module can be utilized for storage, such as by way of recess **224**. As illustrated in FIG. **15**A, the storage space **222** is located in case **212** at a location behind the reflective element **214**. Preferably, the reflective element comprises a front substrate and a rear substrate with an electrochromic medium disposed between, such as a solid polymer matrix electrochromic medium such as is disclosed in U.S. patent application Ser. No. 09/350,930 filed Jul. 12, 1999, entitled "ELECTROCHROMIC POLYMERIC SOLID FILMS, MANUFACTURING ELECTROCHROMIC DEVICES USING SUCH FILMS, AND PROCESSES FOR MAKING SUCH SOLID FILMS AND DEVICES" to Desaraju V. Varaprasad et al., the entire disclosure of which is hereby incorporated by reference herein. Most preferably, the front substrate comprises a glass plate of thickness less than about 1.6 mm, most preferably about 1.1 mm thickness or lower, and the rear substrate comprises a glass plate of thickness equal to or greater than about 1.6 mm, more preferably greater than about 1.8 mm thickness, most preferably equal to or greater than about 2.0 mm thickness. The rearmost surface of the rear substrate (the fourth surface as known in the mirror art) is reflector coated with a high reflecting metal film such as of aluminum or silver, or an alloy of aluminum or silver. Most preferably, the frontmost surface of the rear substrate (the third surface as known in the mirror art) is reflector coated with a high reflecting metal film such as of aluminum or silver, or an alloy of aluminum or silver. Also, and as illustrated in FIG. **15**A, storage space **222** is located behind the reflective element **214**, and is positioned in the space between the reflective element and the windshield W of the vehicle, when the interior rearview mirror assembly is mounted in the vehicle. Preferably, the trough-shaped storage space has length dimension (parallel to the long dimension of casing **212**) of at least about 3 inches, more preferably at least about 4 inches, most preferably at least about 5 inches), and width dimension (perpendicular to the long dimension of casing **212**) preferably of at least about 0.75 inches, more preferably at least about 1.5 inches, most preferably of at least about 2.5 inches.

Optionally, the front surface of the front substrate (i.e. the first surface as known in the mirror art) **214***a* can be coated with a surface coating or otherwise modified so as to reduce the build up of condensation or mist such as can occur in humid climates. For example, the front surface of the front substrate **214***a* (which is the surface upon which condensation/mist might gather or which would be subject to raindrops should the vehicle be a convertible and be driven with hood down during rain) may be optionally coated with a water wetting characteristic modification coating such as a hydrophilic coating such as a photocatalytic hydrophilic coating system such as is disclosed in Japanese Patent Abstract JP11050006A, issued Feb. 23, 1999, titled "Pretreatment of surface Forming Photocatalytic Hydrophilic Film and Cleaning Agent and Undercoating Composition Used Therein" to Mitsumasa et al of Toto Ltd, and in JP10330131A, issued Dec. 15, 1998, titled "Hydrophilic Thin Film and Vehicular Mirror and Glass Product Using The Same Hydrophilic Thin Film" to Tsutomu et al of Ichikoh Ind Ltd, and in JP10036144A, issued Feb. 10, 1998, titled "Antifogging Element" to Toru et al of Murakami Corporation, and in U.S. Pat. 5,724,187, issued Mar. 3, 1998, titled "Electrochromic Mirrors and Devices" to Varaprasad et al of Donnelly Corporation, the disclosures of which are hereby incorporated by reference herein. Also, such wetting characteristic modification coatings and techniques, such as photocatalytic hydrophilic coatings, can be used for the first (frontmost) surface of a non-electrochromic reflective element such as a prismatic interior mirror reflective element (and for the first surface of electrochromic exterior mirror reflective elements and of metal coated, such as chromium coated, exterior non-electrochromic mirror reflective elements).

The present embodiment provides a rearview mirror assembly with a storage location that is easy to reach and, further, when used does not cause the driver to redirect his or her eyes far, or if at all, from the front of the vehicle. The use of a mirror location also minimizes eye strain. In this manner, the unused space behind the electrochromic reflective element mirror assembly is optimally used. Furthermore, since the mirror assembly is a known location in the vehicle, drivers can reach up to the mirror assembly without mental distraction since the movement is essentially a reflex action or an automatic movement which does not require much, if any, concentration from the driver. Therefore, the mirror assembly **210** which is centrally mounted provides an ideal location for storage space and does not obstruct the driver's view.

Referring to FIG. **17**, a fourth embodiment **310** of the interior rearview mirror assembly of the present invention is illustrated. Similar to the previous embodiments, rearview mirror assembly **310** includes a mirror casing or housing **312** and a reflective element **314**, which is mounted to a windshield button by a support **316**. Reference is made to the first embodiment for details of reflective element **314**, optional components on or in housing **312**, and suitable material for housing **312**.

Assembly **310** includes a storage space **322** incorporated into housing **312**, which like the previous embodiment is easily accessible to the driver or other occupants of the vehicle without much distraction or obstruction to the driver's view. In the illustrated embodiment, reflective element **314** is mounted to a bezel or retaining rim **312***a* which supports reflective element assembly **314** in housing **312**. Storage space **322** is provided by a storage bin **324** which is mounted to bezel **312***a* to provide a compartment within housing **312**. Referring to FIG. **18**, bezel **312***a* is pivotally mounted to housing **312** by one or more hinge connections **326** (only one shown). In this manner, bezel **312***a* comprises a pivotal door or hatch that provides access to the inside of casing **312**. Hinge connections **326** are preferably mounted rearward of bezel **312***a* so that hinges **326** are hidden from a vehicle occupant's view. For example, each hinge **326** preferably comprises a pair of tabs or flanges **328**, which are formed or welded to the rearward surface of bezel **312***a*, and corresponding tabs or flanges **330**, which are welded to the lower wall **332** of housing **312**. Tabs **328** and **330** are pivotally coupled together by a pin **334** which extends through the respective tabs or flanges to permit bezel **312***a*, reflective element **314** and bin **324** to be moved between a closed position in which storage bin **324** is contained within housing **312** and reflective element **314** is positioned for rearward viewing and an open position illustrated in FIGS. **17** and **18** to provide access to storage space **322**. Storage space **322**, therefore, provides storage for accessories such

as glasses, pens, money, keys, or the like similar to the previous embodiment. Storage space **322** can also serve as a waste bin, and in this regard, it is preferable that the bin be removable for cleaning.

In the illustrated embodiment, bin **324** extends substantially the full length of the interior housing **312**; however, it can be appreciated that bin **324** may be shaped or shortened to accommodate components within housing **312**, for example electrical wiring or other components described in reference to the first embodiment of interior rearview mirror assembly **10**.

In preferred form, bezel **312***a* supports a latch, such as a spring bias latch **336** for engaging an engagement structure **338** provided on housing **312**. Engagement structure **338** comprises a U-shaped loop with an engagement surface or opening to receive latch **336**. Preferably, latch **336** and engagement structure **338** are located at peripheral portion **340** of opening **342** of housing **312**. Most preferably, latch **336** lies in the same plane as bezel **312***a* when in the locked position so that it does not create a discontinuity in the outline of the mirror assembly and potentially create a distraction to the driver. It should be understood, that bezel **312***a* may be biased in its closed position by a spring biased hinge, thus eliminating the need for a latch. In addition, it can be appreciated that the size and shape of bin **324** may be varied and, furthermore, may be compartmentalized with intermediate walls or ribs, as noted in reference to the previous embodiment.

A fifth embodiment **410** of the rearview mirror assembly of the present invention is illustrated in FIG. **19**. Rearview mirror assembly **410** is of similar construction to mirror assembly **10** and includes a housing **412**, a support **416** and mounting bracket, for mounting housing **412** to a windshield button or the like, a reflective element (not shown), and a bezel (not shown). Mounted to a forward facing side or rear wall **428** of housing **412** is a light assembly **424**, similar to light assembly **124**. Therefore, reference is made to assembly **110** for details on light assembly **424** and other dockable accessories and their preferred mounting arrangements to housing **412**.

In the illustrated embodiment, housing **412** includes a second storage space **426** which is provided on forward facing side or rear wall **428** of housing **412**. Storage space **426** is defined by a recessed area in back wall **430** which extends from an upper wall **432** of housing **412** to a lower wall **434** of housing **412**. Back wall **430** is generally planar and extends between two opposed side walls **436** and **438** which extend inwardly to form, together with back wall **430**, recess **439**. Projecting outwardly from back wall **430** is another storage space provided by an accessory attachment member **440**, such as a clip for supporting generally flat accessories, such as a toll card, an access card, a parking ticket, a note pad, insurance or registration papers, maps, or the like. Preferably, such a clip positively grips the accessory such as by spring tension action or the like onto back wall **430**, such that the accessory is easily insertable and detachable or removable from the accessory attachment member. In the illustrated embodiment, accessory attachment member **440** extends substantially over back wall **430** between side walls **436** and **438**, but it should be understood that attachment member **440** may be shortened and extend over a smaller distance while still providing the same function.

In preferred form, attachment member **440** comprises a plastic material similar to housing **412**. Attachment member **440** may be mounted to back wall **430** either by an adhesive or fasteners or the like. Moreover, attachment member **440** may be welded to back wall **430**. Preferably, attachment member **440** is molded together with housing **412**. Alternately, attachment member **440** may comprise a metal clip and secured by adhesives or other fastening means to housing **412**.

Optionally, housing **412** may include a fourth storage space **446** provided on rear wall **428** for storing other accessories including, for example coins, tokens, work pieces, such as pens, pencils, tools, pen lights, cassettes, CD's, a pager, or the like. In the illustrated embodiment, fourth storage space **446** comprises an elongated cavity or recess **448** formed in upper wall **432** of housing **412** which extends between end walls **436** and **438** behind a back wall **430**. Recess **448** may extend the full height of back wall **430** or may terminate at some intermediate height behind back wall **430**. It should be understood that storage space **446** may include intermediate ribs or intermediate walls to define separate compartments within storage space **446**, as described in reference to mirror assembly **210**.

A sixth embodiment **510** of the interior rearview mirror assembly of the present invention is illustrated in FIG. **20**. Rearview mirror assembly **510** includes a mirror casing or housing **512**, with a retaining rim or bezel **512***a*, and a reflective element **514**, similar to the previous embodiments. Housing **512** may be mounted to the vehicle windshield, headliner or the like as described in reference to housing **12**. Bezel **512***a* extends around the peripheral portion reflective element **514** and optionally includes buttons **513***a*, indicators **513***b*, or displays **513***c* which are commonly known in the art. Similar to the previous embodiment, rearview mirror assembly **510** includes a storage space **526** for supporting an accessory, such as a writing pad **528**, a pager, or the like thereon. Storage space **526** is formed on a front side **530** of housing **512** and is preferably formed by a planar surface **530***a* adjacent bezel **512***a*. Bezel **512***a* includes a planar segment **512***b* which terminates along with reflective element **514** inwardly of peripheral portion **512***e* of housing **512**. In this manner, pad **528** may lay substantially flush with bezel **512***a* to reduce the visual impact of the pad to the driver thereby minimizing the distraction to the driver. Pad **528** may comprise, for example a sticky note pad, and, therefore, be adhered to planar surface **530***a* by the adhesive provided on the back of most conventional sticky note pads. Alternately, surface **530** may include Velcro or a clip or other retaining structure to secure pad **528** to surface **530***a*, some examples of which are described in reference to the embodiment shown in FIGS. **19** and **24**. Furthermore, housing **512** may include a recess behind planar surface to receive clips' of a pager or the like.

Optionally positioned below the chin area of bezel **512***a* is another storage space provided by an accessory attachment member **532**, such as a work piece or writing instrument holder, such as a clip. For example, such a clip preferably positively grips the accessory, such as the pen or pencil, typically by spring tension action or the like between pliant fingers or arms, such that the accessory, such as a pen is readily insertable and detachable/removable from the accessory attachment member. Attachment member **532** may hold a pencil or pen, or alternately another elongated item such as a pen-type flashlight, a tire pressure gauge, or the like. Attachment member **532** may be secured to housing **512** by an adhesive, Velcro, or other fastening means. Preferably, attachment member **532** is plastic and is molded with a lower wall **534** of housing **512**. Attachment member **532** lays generally flat and aligns with top surface **530** of housing **512** to minimize the protrusion and, therefore, the distraction to the driver.

In addition, housing **512** may support one or more map illuminating or dashboard illuminating lights **540** and **542**, for example the lights disclosed in U.S. Pat. No. 5,820,245, which is incorporated by reference herein in its entirety.

Referring to FIG. **21**, a seventh embodiment **710** of the interior rearview mirror assembly of the present invention is illustrated. Mirror assembly **710** includes a mirror casing or housing **712**, a retaining rim or bezel **712***a*, and a reflective element **714**. Reference is made to the first embodiment for description of the housing and bezel material, and reflective element **714** and, further, for preferred mounting arrangements of housing **712** to the vehicle. In the illustrated embodiment, housing **712** includes a storage space **722** which is defined by a slotted recessed portion **724**, which extends into housing **712** from end wall **730** of housing **712**. Recessed portion **724** is formed between opposed walls **726** and **728** and extends between upper wall **732** and lower wall **734** of housing **712** to define a receptacle for an accessory holder **736**. Accessory holder **736** may support or hold a plurality of accessories, including for example, cards, paper work, such as insurance or registration papers, writing pads, maps, and the like. In the illustrated embodiment, accessory holder **736** comprises a writing pad holder and includes a molded body **738** having upper and lower walls **740** and **742** which align and follow the contour of housing **712**. In most preferred form, walls **740** and **742** are flush with outer surface **732***a*, **734***a* of upper and lower walls **732** and **734**, respectively, when holder **736** is inserted into recess **724**. Body **738** also includes an end wall **744** and a back wall **746**, with end wall **744** abutting an inner wall **748** of recess **724** when holder **736** is fully inserted into recess **724**. Distal edge **746***a* of back wall **746** also preferably follows the contour of housing **712** and, most preferably, is generally flush with outer surface **730***a* of end wall **730** of housing **712** when holder **736** is inserted into storage space **722**.

Back wall **746** defines a storage space **750** between end wall **744** and upper and lower walls **740** and **742**, which is preferably sized to hold a writing pad **752**, such as a sticky note pad. Pad **752** may be held in place by the adhesive back, Velcro, or may be held in place by friction between the edges of pad **752** and upper and lower walls **740** and **742**. In addition, back wall **746** preferably includes a gripping surface **754** to permit tactile identification of holder **736** by the driver of the vehicle, thus minimizing the distraction to the driver. For example, gripping surface **754** may comprise one or more projecting ribs or recessed grooves. In addition, gripping surfaces **754** provides improved gripping of body **738**. In this manner, body **738** can be grabbed without requiring the operator of the vehicle to take his or her eyes off the front of the vehicle.

Holder **736** is held in recess **724** preferably by friction. For example, as shown in the illustrated embodiment, side wall **726** includes a plurality of ribs **726***a* which project inwardly toward holder **736** to provide a frictional force between housing **712** and holder **736** (FIG. **21**). Ribs **726***a* may comprise, for example resilient ribs, such as rubber ribs, to provide enhanced friction. Alternately, one or more walls **726** and **728** may support a spring for biasing holder against wall **726** or **728** for frictionally holding holder **736** in recess **724**.

Housing **712** may optionally include a second storage space defined by an accessory attachment member **756** which is preferably molded to upper housing wall **732**. Optionally, attachment member **756** may be separately formed and adhered to upper wall **732** by an adhesive, Velcro or other fastening means. Attachment member **756** includes resilient arms which form a clip and provides a convenient location for storing a tool or work piece, such as a pencil or pen, which can be easily retrieved by an occupant of the vehicle for use with pad **752**. It should be understood that attachment member **756** may be located, for example, below bezel **712***a* in the chin area of mirror casing **712**, or on forward facing side or rear wall **754** of housing **712**, or on an end wall of housing **712**.

Referring to FIG. **22**, a ninth embodiment **810** of the interior rearview mirror assembly of the present invention is illustrated. Rearview mirror assembly **810** includes a mirror housing **812**, a bezel **812***a*, and a reflective element assembly **814**, similar to the previous embodiments. In the illustrated embodiment, housing **812** is supported by a support arm **816** with a modified break-away mounting bracket or mirror mount **817**. In the illustrated embodiment, support arm **816** includes a pair of ball mounts **824***a* and **824***b* for extending into a receiving socket on housing **812** and into a receiving socket in bracket **817**.

As best seen in FIG. **23**, break-away mounting bracket **817** includes a body **818** with a generally planar base portion **820** and an upwardly extending tapered portion **822** having a spherical socket or receptacle into which ball mount **824***b* projects to permit repositioning of interior mirror housing **812** about bracket **817**. Body **818** includes a windshield facing side **824**, which is configured to releasably mount to a conventional windshield mounted button, for example, a button as described in U.S. Pat. No. 5,820,097, the disclosure of which is incorporated by reference herein. Body **818** further includes a rearward facing planar surface **825** which defines a storage surface **826** for storing an accessory, such as a writing pad **828**, such as a sticky note pad. In this manner, when assembly **810** is mounted to a vehicle windshield or headliner, pad **828** is easily accessible by the driver or occupant of the vehicle and, furthermore, is located in a known location that does not obstruct the driver's view. Preferably, pad **828** is adhered to planar surface **825** by the adhesive provided on most conventional sticky note pads. Alternately, pad **828** may be mounted by Velcro or may include a stiff backing member, for inserting into a corresponding receiving structure provided on planar surface **825**, as will be understood by those skilled in the art.

In addition, body **818** preferably includes another storage space provided by an accessory attachment member similar to that shown at **440**, **532** or **756** above, or one or more tubular members formed on bottom wall **818***a* of body **818** for holding a tool or work piece **830**, such as a writing instrument, for example a pen or pencil or the like. Preferably, such attachment members are integrally molded with body **818**; however, it can be appreciated that the attachment member may be adhered to body **818** by a suitable adhesive or fasteners. Reference is made to the previous embodiments for examples of suitable attachment members, such as clips or work piece holders. It should be understood from the foregoing, that pad **828** and pencil **830** are conveniently placed behind the rearview mirror housing **812** and thus do not obstruct the view of the driver of the vehicle. Furthermore, by positioning pad **828** and pencil **830** on the mirror mounting bracket, minimal, if any, distraction is required to access or to retrieve the pad or pencil since the pad and pencil are located in a known location in the vehicle.

Referring to FIG. **24**, a second embodiment **917** of a mirror mounting bracket or mirror mount is illustrated. Mirror mounting bracket **917** may be used in conjunction with any one of the illustrated embodiments of the interior rearview mirror assemblies and further with other interior rearview mirror assemblies. Mirror mounting bracket **917** includes a body **918** which supports a ball member **918***a* and

is adapted to provide a break-away mount to a conventional windshield mounted button, as described in reference to the previous embodiment. Ball member **918***a* is engaged by a support arm (not shown) similar to support arm **16**. Extending from a lower end **918***b* of body **918** is a storage space provided by a pendent accessory holder **924**, such as a note pad holder, a map holder, or a holder for other generally flat accessories, for example a writing pad, a plastic card, such as a credit card, an access card or a toll card, or the like. Holder **924** includes a body with a planar portion **925** and an accessory attachment member **926**, such as a clip, formed at an upper end of planar portion **925** which projects downwardly and together with planar surface **925***a* of planar portion **925** forms a storage space for supporting an accessory.

Holder **924** may be mounted to telescope from bracket **917**. For example, holder **924** may be mounted on a telescoping member or jack action or the like, or move down to an extended position below the mirror casing and then retract for storage. When holder **924** is extended down, holder **924** may include a foldable support or finger, which can be selectively moved to extend from the windshield facing side of holder **924** to touch the window to provide support when holder **924** is in its extended position. Optionally, holder **924** may be pivotally mounted to the mirror mounting bracket for reorienting toward the driver or other occupants of the vehicle. In addition, accessory attachment member **926** can be located elsewhere on the mirror assembly. For example, attachment member **926** may be located on the mirror case, such as on the rear wall or forward facing side of the casing. By providing spring-loaded gripping fingers to the pendent accessory, a map can be held below the mirror assembly when mounted in the vehicle in a position readily viewable by the driver.

Optionally, holder **924** may be integrally molded with body **918** of mirror mounting bracket **917**. However, it can be appreciated that holder **924** may be secured to bottom surface **918***a* of body **918** by an adhesive or other suitable fastening means. Preferably mounted to a lower end **930** of planar portion **925** is a second storage space provided by a second accessory attachment member **932**, such as a work piece attachment member, for example a clip which positively holds the accessory, for example by tension between two flexible fingers or arms or the like. Attachment member **932** may comprise an integrally molded member having a generally C-shaped cross section similar to attachment member **756** described in reference to FIG. **21** or include a J-shaped body similar to attachment member **532** illustrated in FIG. **20**. Alternately, attachment member **932** may comprise a tubular member with an elongated cylindrical passage for holding a work piece or a pair of cylindrical or ring shaped members, which are aligned to define a pair of spaced apart support surfaces for a work piece, such as a pencil, pen, pressure gauge, pen-light or the like, such as those shown at **440**, **532** or **756** above.

A tenth embodiment **1010** of an interior rearview mirror assembly of the present invention is illustrated in FIG. **25**. Rearview mirror assembly **1010** includes a mirror casing or housing **1012**, a bezel **1012***a* and a reflective element **1014**. Reference is made to the first embodiment for suitable materials for housing **1012** and bezel **1012***a* and a description of reflective element **1014**. Bezel **1012***a* extends around the peripheral portion of reflective element **1014** and includes an enlarged side area **1016**, which provides a location for a power supply connection **1018**, for example a 12-volt power supply connection. Similar to conventional power supplies provided in dashboards or consoles of most conventional vehicles, power supply connection **1018** includes a cylindrical casing **1020** which extends into assembly **1010** through bezel **1016**. The contacts for the power supply (not shown) are coupled to the vehicle electrical system by way of wiring which extends through housing and exits housing **1012** preferably through mirror mount (not shown), which may be of similar construction to the ball mount illustrated in FIG. **6** of the first embodiment. In this manner, accessories, such as radar detectors or the like, may be plugged into the interior rearview mirror assembly **1010** thus reducing the length of wire required for the radar detector to reach most conventional power supplies and further reducing the distraction of dangling wires associated with conventional radar detectors.

In addition, housing **1012** includes a storage space **1026** in the form of one or more coin holders **1028***a*, **1028***b*, and **1028***c*. Coin holders **1028***a*, **1028***b*, and **1028***c* comprise cylindrical members of different sizes or diameters which extend into housing **1012** rearward of reflective element assembly **1014**. Each coin holder **1028***a*, **1028***b*, and **1028***c* includes an associated release mechanism for releasing coins held in the respective holder. Preferably, the release mechanism is accessible from the forward facing side or rear wall **1030** of housing **1012**, which is easily accessible by the driver of the vehicle. In one form, each coin holder includes cylindrical members which extend from a lower wall **1032** of mirror housing **1012** to an upper wall **1034** so that coins may be loaded into their respective coin holders through the upper wall **1032** of housing **1012**. In order to maximize the number of coins held in the respective coin holders, each latch **1029** is preferably located in close proximity to lower openings **1036***a*, **1036***b*, **1036***c* of each respective coin holder. In one form, latches **1029** comprise spring biased members which block openings **1036***a*, **1036***b*, **1036***c* to prevent the coins held therein from being released through the bottom openings of each respective holder until such a time that the respective latch is released from its extended position by the operator of the vehicle.

In preferred form, housing **1012** includes a second storage space **1036** inside housing **1012**. Storage space **1036** may support a supply of facial tissue, wipes, a tape dispenser, or a supply of air freshener. The tissue, wipe, tape, or air freshener is removed or ejected from housing **1012** through an opening **1038** provided in bottom wall **1032** of housing **1012**. For example, the supply of air freshener may be provided by an aerosol container or cartridge **1040** which is supported on and mounted to lower wall **1032** by one or more retainers, such as clips, which may be formed on the interior of housing **1012**. To minimize noise and induced vibration, preferably the cartridge of the air freshener supply is rigidly mounted to housing wall **1032**. Also, optionally provided on bottom wall **1032** is an actuator **1042**, such as a button, which releases the air freshener from container **1040** through opening **1038**.

Moreover, a vehicle cabin air monitor can be incorporated into mirror assembly **10** such as within housing **1012**, that includes reflective element **1014**, or in a pod or housing that attaches to the mirror mount. Reference is made to copending application Ser. No. 09/244,726, which is incorporated herein by reference in its entirety, for an example of a suitable pod. For example, levels of carbon monoxide may be monitored by such air monitors provided at the mirror location. Preferably, the air monitor includes an intake, preferably a fan assisted intake that samples the air within the cabin. In preferred form, when the vehicle level of carbon monoxide exceeds a threshold level, the monitor takes appropriate action, for example sounding an alarm,

shutting off the engine, and/or opening windows. Such an air monitoring system is preferably used with a remote ignition system such as is commonly used in cold climates when the engine is started up remotely. Such a vehicle air monitoring system protects against the build up of carbon monoxide within the vehicle cabin.

Referring to FIGS. **26** and **27**, the numeral **1110** generally designates a second embodiment of the mirror assembly illustrated in FIGS. **1–8**. Mirror assembly **1110** includes a housing or casing **1112**, a reflective element **1114**, and a storage space **1120**. Storage space **1120** comprises a cavity formed in casing **1112** for housing an accessory **1124**. Similar to accessory **24**, accessory **1124** may comprise a vanity mirror or a display device, including a video display device as described in reference to the first embodiment. For further details of casing **1112**, reflective element **1114**, and other electrical and electronic devices which may be housed in casing **1112**, reference is made to assembly **10**.

Accessory **1124** is mounted within cavity **1120** of mirror housing **1112** for movement between a retracted position and an extended position, as shown in FIG. **26**. Preferably, when in its retracted position, accessory **1124** is substantially contained in cavity **1120** and, most preferably, such that accessory **1124** is completely contained in cavity **1120** so that accessory **1124** does not project from casing **1112** and potentially creates a distraction to the driver of the vehicle.

Referring to FIG. **27**, accessory **1124** is mounted interiorly of casing **1112** in cavity **1120** by a pivot member **1126**. Pivot member **1126** permits accessory **1124** to be moved between its retracted position within casing **1112** and its extended position by pivoting about a pivot axis **1126***a*. In the illustrated embodiment, pivot member **1126** includes an elongate body **1132** with opposed support pins **1134** which are pivotally mounted in support members **1136**, such as flanges, provided in casing **1112**. Preferably, support members **1136** comprise flanges which project downwardly from upper wall **1112***a* of casing **1112** and which space support pins **1134** inwardly from rear wall **1138** so as to permit accessory **1124** to pivot to its retracted position within casing **1112** between back wall **1138** and reflective element **1114**. It should be understood, that support members **1136** may extend to rear wall or may include reinforcing ribs or webs which extend to rear wall **1138** to provide stiffness to support members **1136**.

Accessory **1124** is pivotally mounted to pivot member **1126** about a pivot axis **1128***a* to permit repositioning of accessory **1124** about a generally vertical axis when accessory **1124** is moved to its extended position such as illustrated in FIG. **26**. In this manner, once accessory **1124** is moved or pivoted to its extended position outside casing **1112**, the position of accessory **1124** may be easily adjusted by an occupant of the vehicle, for example the driver or a passenger of the vehicle.

As noted above and described in reference to the first embodiment of the interior rearview mirror assembly of the present invention, accessory **1124** may comprise a vanity mirror or may comprise a display device. In preferred form, accessory **1124** includes a housing **1128** in which an element **1130**, such as a reflective element or display element, is supported. Housing **1128** may include a ball mount to pivotally mount housing **1128** to pivot member **1126** or may include a socket to receive a ball mount provided on pivot member **1126** to permit accessory **1124** to tilt about the horizontal axis as well. Alternately, housing **1128** may be pivotally mounted by a pivot pin which generally permits rotation of housing **1128** and element **1130** only about axis **1128***a*.

As best understood from FIG. **27**, when accessory **1124** is pivoted on pivot member **1126** about pivot access **1126***a* and generally aligned with pivot member **1126** along axis **1126***a*, accessory **1124** can then be retracted into cavity **1120** behind reflective element **1114**.

A third embodiment **1210** of the interior rearview mirror assembly illustrated in FIGS. **1–8** is shown in FIGS. **28** and **29**. Mirror assembly **1210** includes a mirror casing **1212**, a reflective element **1214**, which is supported in casing **1212**, and a storage space **1222**. Housed in storage space **1222**, is a pendent accessory **1224**. As described in reference to accessory **24**, accessory **1224** may comprise a vanity mirror or a display device. For further details of description of housing **1212**, reflective element **1214**, and components optionally supported in casing **1212**, and variation of accessory **1124** reference is made to assembly **10**.

In the illustrated embodiment, storage space **1222** comprises a cavity **1222***a* which extends into casing **1112** through an opening formed or provided in bottom wall **1112***a*. Cavity **1222***a* is preferably formed by molding and extends behind reflective element **1114** into casing **1112**. Accessory **1224** is pivotally mounted in cavity **1222***a* by a pivot member **1226** as will be more fully described below, so that accessory **1224** can be moved between an extended position for viewing by an occupant of the vehicle (shown in FIG. **23**) or a retracted or storage position within storage space **1222**. Preferably, when in its storage position, accessory **1224** is substantially contained within storage space **1222** and, most preferably, completely contained and retracted into storage space **1222**.

Accessory **1224** includes a housing **1228** and an element **1230**, such as a reflective element or a display element. Reference is made to element **30** for examples and further description of element **1230**. Preferably, housing **1228** includes a body **1228***a* with a recessed central portion or recessed wall **1234** which defines a perimeter wall **1234***a*. Element **1230** is supported in recessed portion **1234** and preferably mounted for pivotal movement in recessed portion **1234** so that the orientation of element **1230** can be adjusted by an occupant of the vehicle. Preferably, element **1230** is mounted to permit manual adjustment of element **1230**; however, it should be understood that remote adjustment can be provided by an actuator, such as an electronic actuator, which are well known in the art. In the illustrated embodiment, recessed portion **1234** includes a ball mount **1236** which projects outwardly and on which element **1230** is mounted by a socket member which is provided on rear surface **1230***a* of element **1230**. The ball and socket arrangement provides for pivotal movement of element **1230** about horizontal and vertical axes. Preferably, when mounted on ball mount **1236**, element **1230** generally lies in the same plane as upper surface **1234***b* of perimeter wall **1234***a* when in a non-tilted position so that element **1230** will not project outwardly from housing **1228** so that housing **1228** can be quickly and easily pivoted to its retracted position within storage space **1222**. As would be understood by those skilled in the art, element **1230** may alternately include a ball mount mounted to its rear surface **1230***a* with recessed portion **1234** having a socket member for receiving the ball mount of element **1230**.

Referring to FIG. **29**, at least lower edge **1238***a* and side edge **1238***b* of housing **1228** preferably follow the contours of casing **1212** so that when retracted, housing **1228** generally follows the contour of casing **1212**. Moreover, housing **1228** is preferably the same size as the opening to cavity **1222** sot that when retracted, housing **1228** appears to be a unitary part of the mirror.

Referring to FIG. **29**, housing **1228** supports pivot member **1226** and preferably includes a stop **1232** which is spaced from pivot member **1226** and limits rotation of housing **1228** about pivot member **1226** by engaging bottom wall **1212***a* of casing **1212** (as shown in FIG. **28**). In preferred form, as previously noted, housing **1228** is commensurate in size with the opening or mouth of cavity **1222***a* so that when retracted, the lower surface **1224***a* of accessory **1224** follows casing **1212** and forms a unitary part of mirror assembly **1210**. Pivot member **1226** is mounted in case **1212** on a support member, such as a support flange **1240**, which is formed or otherwise provided on bottom wall **1212***a* of casing **1212**. Accessory **1224** is mounted for pivotal movement on support member **1248** by pivot member **1226** which is preferably journaled in member **1240**. In preferred form, when fully retracted into storage space **1222**, accessory **1224** does not provide any obstruction to the driver's view through the front windshield of the vehicle; instead, accessory **1224** is preferably substantially hidden from view when retracted. When extended from casing **1212**, accessory **1224** projects downwardly from bottom wall **1212***a* to provide, for example a vanity mirror or a display member including a video display, as previously noted with the orientation of element **1230** within housing **1228** being preferably manually adjustable by an occupant of the vehicle, including the driver.

As described in reference to the previous embodiments, element **1230** may comprise a reflective element, including a flat reflector, a reflector having a compound curvature, an aspheric or convex mirror reflector, or may comprise a display screen for displaying information, such as vehicle status, a rearview vision system, or a baby minder system as previously described. In addition, housing **1228** may support a plurality of light sources, such as incandescent light sources or non-incandescent light sources, such as LEDs, around element **1220** to provide a vanity mirror.

Referring to FIG. **30**, a second embodiment **1310** of the interior rearview mirror assembly illustrated in FIGS. **15**, **15**A, and **16** is shown. Mirror assembly **1310** includes a housing or casing **1312**, a reflective element **1314**, and support arm **1316**, and mounting bracket **1317**. It should be understood that other support arms and mounting arrangements may be used to mount assembly **1310** onto a vehicle headliner or windshield. Reference is made to assembly **210** for further description of casing **1312**, reflective element **1314**, support arm **1316**, and bracket **1317**. Similar to casing **212**, upper wall **1312***a* of casing **1312** includes a storage space **1322** for supporting an accessory **1324**. In the illustrated embodiment, accessory **1324** comprises a dispensing accessory for dispensing wipes, including "wet wipes" or glass cleaner wipes or the like, or tissues so that an occupant of the vehicle can easily and quickly retrieve a wipe or tissue T. Storage space **1322** may be provided by a recess, similar to recess **224**, and by molding a recess into upper wall **1312***a* of casing **1312** or may be provided by an insert which is inserted into upper wall **1312***a* through an opening, similar to opening **222***a*.

Dispensing accessory **1324** includes a container **1326** with a dispensing opening **1328** through which a wipe or tissue T may be dispensed for use by an occupant of the vehicle. Housing **1326** is removably supported in storage space **1322** and may be releasably retained in storage space **1322** by a friction fit, snap couplers or may be held in place by one or more spring loaded latches **1330**. As would be understood by those skilled in the art, spring loaded latches **1330** may frictionally engage an inner surface **1322***a* of storage space **1322** or may engage a corresponding recess provided on inner surface **1322***a*. In this manner, tissue or wipe dispensing accessory **1324** may be quickly and easily removed from storage space **1322** for refill or replacement. Optionally, additional storage space may be provided for discarded tissues or wipes. For example, storage space **1322** may be segregated into two storage spaces—one for holding the dispensing accessory, and the other for holding the discarded tissues, wipes, or other trash. Alternately, a disposal bin may be provided elsewhere in the vehicle.

It should be understood from the foregoing, that interior rearview mirror assembly **1310** provides a storage space **1322** which may be used to support a wide variety of accessories therein beside tissue dispenser **1324**. Optionally, as previously noted, tissue dispensing assembly **1324** may be removed such that storage space **1322** may be used for storing other accessories, as described in reference to assembly **210**.

Referring to FIG. **31**, a second embodiment **1410** of the interior rearview mirror assembly illustrated in FIGS. **9–14** is shown. Mirror assembly **1410** includes a mirror housing or casing **1412**, a reflective element **1414**, and a storage space **1422** for storing a dockable accessory **1424**, similar to assembly **110**. As previously described, dockable accessory **1424** may comprise a light assembly (as shown), a telecommunication device, such as a phone or a pager, or other hand held electrical or electronic devices or the like. For further details of housing **1412**, dockable accessory **1424**, and reflective element **1414** general reference is made to assembly **110**.

In the illustrated embodiment, dockable accessory **1424** includes a housing **1426** which includes a pair of spring loaded latches **1428** for engaging elongate recesses **1430** provided in back wall **1412***a* of casing **1412** in storage space **1422**. Housing **1426** preferably supports a pair of latch releases **1432** which move latches **1428** between an insertion position and an engagement position. When moved to their insertion position, which is typically achieved when latch releases **1432** are compressed, latches **1428** can then be aligned for insertion into elongate recesses **1430**. When latch releases **1432** are released, latches **1428** engage with casing **1412** in recessed **1430**, as will be understood by those skilled in the art. Similar to the previous embodiment illustrated in FIGS. **9–14**, housing **1412** preferably supports a pair of contacts **1432** which permit accessory **1424** to couple to either a recharging unit in mirror assembly **1410** or located elsewhere in the vehicle for recharging of dockable accessory **1424**, as previously described in reference to assembly **110**. Optionally, housing **1426** may support a pair of guide members **1444** which engage corresponding elongated recesses or slots **1446** provided in side wall **1448** of storage space **1422**. In this manner, guide members **1444** guide dockable assembly **1424** into the correct position onto storage space **1422**. Therefore, in order to dock accessory **1424** onto storage space **1422**, latch releases **1432** must be compressed so that latch members **1428** are aligned for placement into elongated recesses **1430**. When guide members **1444** properly aligned with recesses **1446**, and latches **1428** are inserted into elongated recesses **1430**, latch releases **1432** may be then released so that dockable accessory **1424** is releasably mounted to casing **1412**.

Referring to FIG. **32**, a third embodiment **1510** of the interior rearview mirror assembly illustrated in FIGS. **9–14** is shown. Mirror assembly **1510** includes a mirror casing **1512**, a reflective element **1514**, and a storage space **1522**, on which a dockable accessory **1524** is mounted for storage and later retrieval by an occupant of the vehicle, such as the driver. For further details of housing **1512**, reflective ele-

ment **1514**, and dockable accessory **1524**, reference is made to mirror assembly **110**.

In the illustrated embodiment, storage space **1522** is formed by generally planar recessed wall **1526** provided on back wall **1512***a* of mirror case **1512** and a cavity **1528** which is formed in back wall **1512***a*. As noted in reference to accessory **24**, accessory **1524** may comprise a light assembly, a telecommunications device, such as a telephone or pager or the like. Accessory **1524** includes a housing **1530** with a flange portion **1532**. Flange **1532** is commensurate in size with cavity **1528** so that when flange **1532** is inserted into cavity **1528**, accessory **1524** is held in storage space **1522** by the friction between flange **1532** and wall **1528***a* which defines cavity **1528** and wall **1526**. Housing **1530** supports a cover or lens **1534** and includes at least one gripping surface **1536**, similar to the dockable accessory described in reference to embodiment **110**. Optionally mounted to flange **1532** are a pair of contacts **1538** which engage or make contact with a corresponding pair of contacts provided on cavity wall **1528***a* in cavity **1528**. Thus, when accessory **1524** is docked onto storage space **1522**, accessory **1524** is held in place by friction between flange **1532** and wall **1528***a* and is coupled to a recharger located either in casing **1512** or elsewhere in the vehicle to recharge batteries supported within housing **1530** of accessory **1524**, as described in greater detail in reference to accessory **124**.

Similar to the previous embodiments, housing **1530** and cover **1534** are preferably contoured to follow contour of casing **1512** such that when docked, accessory **1524** forms a unitary unit with casing **1512**. It should be understood, that flange **1532** may be provided with releasable couplers, as snap fit flanges or the like which provide a positive engagement between flange **1532** and wall **1528***a* or wall **1526** as will be understood by those skilled in the art. In addition, flange **1532** may support releasable latches similar to latches **1428** described in reference to the previous embodiment.

Referring to FIG. **33**, the numeral **1610** generally designates a fourth embodiment of the interior rearview mirror assembly illustrated in FIGS. **9–14**. Mirror assembly **1610** includes a mirror housing or casing **1612**, reflective element **1614**, and a storage space **1622** for storing a dockable accessory **1624**, similar to the previous embodiment. As previously described, dockable accessory **1624** may comprise a light assembly (shown), a telecommunications device, such as a phone or a pager or other hand held electrical or electronic devices. For further details of housing **1612**, reflective element **1614** and accessory **1624**, general reference is made to assembly **110**.

Storage space **1622** is formed by a generally planar wall **1626** formed on back wall **1612***a* of casing **1612** and a generally open cavity **1628** which is formed in back wall **1612***a* and has a generally U-shaped configuration. Cavity **1628** is defined between planar wall **1626** and a generally U-shaped retaining wall **1628***a* which extends over planar wall **1626**. Accessory **1624** includes a housing **1630**, which supports a cover or lens **1632**, and a flange **1634** commensurate in shape with cavity **1628** so that when accessory **1624** is docked in storage space **1622**, flange **1634** extends into cavity **1628** and is held in place by U-shaped wall **1628***a*. Preferably, accessory **1624** is held in storage space **1622** by frictionally engagement between flange **1634** and wall **1628***a* of cavity **1628** and planar wall **1626**.

In order to follow the contours of casing **1612**, housing **1630** preferably includes a projecting lip **1636** which extends over flange **1634** and is commensurate in shape with opening **1628***b* of cavity **1628** such that when accessory **1624** is docked into storage space **1622**, housing **1620** abuts casing **1612** and generally follows the contours of casing **1612**. In this manner, when docked, accessory **1624** forms a generally unitary assembly with casing **1612**.

Optionally, housing **1630** or flange **1636** may support one or more latches for positively engaging casing **1612**, as previously described. In preferred form, casing **1612** supports a pair of contacts **1638** in storage space **1622** which electrically couple and make contact with corresponding contacts provided on accessory **1624** so that accessory **1624** may be recharged while docked in storage space **1622**, as previously described.

The present invention provides a cavity or pocket created in the mirror housing or case such as by molding. This cavity or pocket provides a storage compartment for accessories, such as sunglasses, coins, parking tokens, a tape dispenser, tissue or wipe dispensers, and the like. Thus, for example, the driver on exiting the vehicle can take off a pair of sunglasses and readily and conveniently store them by placing them into the pocket storage compartment in the interior mirror casing, where the accessory is supported or stored. By locating the storage space on or in the interior mirror assembly, a high mounted storage location is provided which is away from children or pets in the car and further, may also provide a storage location that is not readily visible from outside the vehicle, therefore, enhancing the vehicle security. Also, the present invention provides storage space on or within the mirror assembly that may be open storage insofar that no door hatch or latch is provided or required, an example of which is illustrated in FIGS. **9–16** and **19–24**, or may be closed storage, accessible such as by a door, hatch, latch, slider, telescoping support or the like, such as illustrated in FIGS. **1–8** and **17–18**. Further, storage space is provided on the exterior of the mirror casing (or optionally, elsewhere on the rearview mirror assembly such as on the mirror support arm or on the mirror mount) for objects such as writing instruments such as pens, pencils and the like. The driver or passenger can releasably attach, for example, a pencil to the clip provided on the mirror casing. This provides a location in the vehicle interior cabin where the driver or passengers can readily find a pencil or the like.

As would be understood by those skilled in the art, modifications can be made to the various components of the several embodiments described above without departure from the spirit of the present invention. For example, the mirror casing may include an elongated recess extending into the casing which provides storage space for a tool, such as a pressure gauge or screw driver or pocket knife, or work piece, such as a writing instrument or light pen. The storage space may comprise an open storage space in which articles are quickly insertable to or retractable from the storage space or a closed storage space, such as described in reference to mirror assembly **310**, which is accessed through a door or hatch. The storage space may comprise an attachment member such as a clip for releasably retaining a writing instrument such as a pen, or the like, to the rearview mirror assembly such as to the mirror case, to the mirror bracket/mount or to the mirror support arm. The present invention provides one or more storage spaces for storing articles or accessories and is applicable to a wide variety of interior rearview mirrors including electrically operated compass mirrors such as disclosed in U.S. Pat. No. 5,253,109, electrically operated interior rearview mirrors incorporating map reading lights such as disclosed in U.S. Pat. Nos. 4,646,210; 4,733,336; 4,807,096; and 5,178,448; and electrically operated automatically dimming mirrors such as described in U.S. Pat. Nos. 4,793,690; 4,799,768; 4,886,960; and 5,193,

029, mirror assemblies incorporating GPS such as disclosed in patent application Ser. No. 08/569,851, filed Dec. 8, 1995, by Roger L. Veldman and Desmond O'Farrell for "A VEHICLE GLOBAL POSITIONING SYSTEM NAVIGATIONAL AID"; now U.S. Pat. No. 5,971,552; mirrors including head light controls, such as disclosed in U.S. patent application Ser. No. 08/621,863, filed Mar. 25, 1996, entitled "VEHICLE HEADLIGHT CONTROL USING IMAGING SENSOR"; now U.S. Pat. No. 5,796,094; mirrors incorporating displays, such as disclosed in U.S. patent application Ser. No. 09/244,726, filed Feb. 5, 1999, entitled "REARVIEW MIRROR ASSEMBLY INCORPORATING VEHICLE INFORMATION DISPLAY", now U.S. Pat. No. 6,172,613, and U.S. Pat. No. 5,530,240 for "DISPLAY FOR AUTOMATIC REARVIEW MIRROR"; mirrors incorporating blind spot detection systems, such as disclosed in U.S. Pat. No. 5,530,240; U.S. Pat. No. 5,576,687; and U.S. patent application Ser. No. 08/799,735, entitled "VEHICLE BLIND SPOT DETECTION AND DISPLAY SYSTEM", filed Feb. 12, 1997; and mirrors incorporating remote frame action systems, such as disclosed in U.S. patent application Ser. No. 09/057,428, filed Apr. 8, 1998, for "A VEHICLE MOUNTED REMOTE TRANSACTION INTERFACE SYSTEM"; now U.S. Pat. No. 6,158,655; and U.S. Pat. No. 5,798,575; all commonly assigned to Donnelly Corporation, Holland Mich. and the disclosures of which are herein incorporated by reference in their entireties.

Changes and modifications in the specifically described embodiments can be carried out without departing from the principles of the invention, which is intended to be limited only by the scope of the appended claims, as interpreted according to the principles of patent law.

We claim:

1. An interior rearview mirror assembly for a vehicle, said mirror assembly comprising:

a support adapted for mounting said mirror assembly to one of a vehicle windshield and a vehicle header,

a casing pivotally attaching to said support and including a rearward facing opening and a forward facing side;

a reflective element positioned in said casing and supported in said rearward facing opening, said reflective element providing a rearward field of view for a driver of the vehicle when said mirror assembly is mounted to the one of a vehicle windshield and a vehicle header;

an electrically operated assembly;

said casing including a casing wall having an exterior surface with a recessed portion, said recessed portion providing storage capacity for said electrically operated assembly and for storing said electrically operated assembly in a location accessible by an occupant of the vehicle whereby said electrically operated assembly can be removably docked at said recessed portion for use by an occupant of the vehicle, said recessed portion including an accessory attachment member for releasably holding said electrically operated assembly, and said attachment member being provided on said forward facing side; and

said electrically operated assembly having an exterior surface, said exterior surface of said electrically operated assembly generally following a contour of said exterior surface of said casing wall when said electrically operated assembly is positioned at said recessed portion whereby said electrically operated assembly forms a unitary assembly with said casing when said electrically operated assembly is mounted at said recessed portion.

2. An interior rearview nurror assembly for a vehicle, said mirror assembly comprising:

a support adapted for mounting said mirror assembly to one of a vehicle windshield and a vehicle header,

a casing pivotally attaching to said support;

a reflective element positioned in said casing, said reflective element providing a rearward field of view for a driver of the vehicle when said mirror assembly is mounted to the one of a vehicle windshield and a vehicle header;

an electrically operated assembly comprising a light assembly;

said casing including a casing wall having an exterior surface with a recessed portion, said recessed portion providing storage capacity for said electrically operated assembly and for storing said electrically operated assembly in a location accessible by an occupant of the vehicle whereby said electrically operated assembly can be removably docked at said recessed portion for use by an occupant of the vehicle; and

said electrically operated assembly having an exterior surface, said exterior surface of said electrically operated assembly generally following a contour of said exterior surface of said casing wall when said electrically operated assembly is positioned at said recessed portion whereby said electrically operated assembly forms a unitary assembly with said casing when said electrically operated assembly is mounted at said recessed portion.

3. The interior rearview mirror assembly according to claim **2**, wherein said reflective element comprises a variable reflectance reflective element.

4. The interior rearview mirror assembly according to claim **3**, wherein said reflective element comprises an electro-optic reflective element.

5. The interior rearview mirror assembly of claim **4**, wherein said electro-optic reflective element comprises an electrochromic reflective element.

6. The interior rearview mirror assembly of claim **5**, wherein said electrochromic reflective element comprises an electrochemichromic reflective element.

7. The interior rearview mirror assembly according to claim **2**, wherein said recessed portion is located behind said reflective element.

8. The interior rearview mirror assembly according to claim **2**, wherein said casing comprises a plastic casing.

9. The interior rearview mirror assembly according to claim **2**, wherein said casing comprises an engineering polymer material.

10. The interior rearview mirror assembly according to claim **2**, wherein said recessed portion includes an accessory attachment member for releasably bolding said electrically operated assembly.

11. The interior rearview mirror assembly according to claim **10**, wherein said attachment member is integrally molded with said casing.

12. The interior rearview mirror assembly according to claim **2**, wherein said casing includes a forward facing side, and said forward facing side includes said recessed portion.

13. The interior rearview mirror assembly according to claim **2**, wherein said recessed portion includes an accessory attachment member for securing the electrically operated assembly to said casing.

14. An interior rearview mirror assembly for a vehicle, said mirror assembly comprising:

a casing;

a reflective element positioned in said casing;

at least one accessory;

said casing including a storage space, said storage space providing storage capacity for said at least one accessory and for storing said at least one accessory in a location accessible by an occupant of the vehicle whereby said at least one accessory can be inserted into or removed from said storage space for use by an occupant of the vehicle; and

said accessory comprising a dockable assembly, said dockable assembly being supported in said storage space and being removably mounted to said casing whereby said dockable assembly can be docked in said storage space and an occupant of the vehicle can remove said dockable assembly from said storage space and use said dockable assembly independently of said rearview mirror assembly, said dockable assembly comprising a light assembly, and said light assembly including a housing and a lens, at least one of said lens and said housing being contoured to follow contours of said casing whereby said light assembly forms a unitary part of said casing of said mirror assembly when said light assembly is mounted in said storage space.

15. The interior rearview mirror assembly according to claim **14**, wherein said casing includes a pair of recessed portions formed on opposed ends of said casing, each of said recessed portions storing a light assembly.

16. The interior rearview mirror assembly according to claim **14** wherein said housing includes at least one gripping surface.

17. The interior rearview mirror assembly according to claim **16**, wherein said gripping surface comprises a recess formed in said housing.

* * * * *