US008388551B2

(12) **United States Patent**
Freeman et al.

(10) **Patent No.: US 8,388,551 B2**
(45) **Date of Patent: Mar. 5, 2013**

(54) **METHOD AND APPARATUS FOR MULTI-USE BODY FLUID SAMPLING DEVICE WITH STERILITY BARRIER RELEASE**

(75) Inventors: **Dominique Freeman**, La Honda, CA (US); **Don Alden**, Sunnyvale, CA (US); **Dirk Boecker**, Palo Alto, CA (US); **Mike Cane**, Cambridge (GB); **Matt Schumann**, Cambridge (GB); **Mike Beadman**, Cambridge (GB)

(73) Assignee: **Sanofi-Aventis Deutschland GmbH**, Frankfurt am Main (DE)

(*) Notice: Subject to any disclaimer, the term of this patent is extended or adjusted under 35 U.S.C. 154(b) by 505 days.

(21) Appl. No.: **12/127,428**

(22) Filed: **May 27, 2008**

(65) **Prior Publication Data**

US 2008/0300614 A1 Dec. 4, 2008

Related U.S. Application Data

(60) Continuation of application No. 11/627,252, filed on Jan. 25, 2007, now Pat. No. 7,875,047, which is a division of application No. 10/323,623, filed on Dec.

(Continued)

(51) **Int. Cl.**
A61B 5/00 (2006.01)

(52) **U.S. Cl.** **600/583**; 606/181

(58) **Field of Classification Search** 606/181, 606/182; 600/573, 583
See application file for complete search history.

(56) **References Cited**

U.S. PATENT DOCUMENTS

2,061	A	4/1841	Osdel	606/182
55,620	A	6/1866	Capewell	606/181
1,135,465	A	4/1915	Pollock	606/181
1,733,847	A	10/1929	Wilmot	292/332
2,258,857	A	10/1941	McCann	601/81
2,628,319	A	2/1953	Vang	310/15
2,714,890	A	8/1955	Alfred	606/169
2,763,935	A	9/1956	Whaley	33/511
2,801,633	A	8/1957	Ehrlich	606/181

(Continued)

FOREIGN PATENT DOCUMENTS

DE	2206674	8/1972
DE	3538313 A1	4/1986

(Continued)

OTHER PUBLICATIONS

Wolfbeis et al. (Sol-gel based glucose biosensors employing optical oxygen transducers, and a method for compensating for variable oxygen background, Biosensors & Bioelectronics 15 (2000) pp. 69-76).

Primary Examiner — Victor Nguyen
(74) *Attorney, Agent, or Firm* — Paul Davis; Goodwin Procter LLP

(57) **ABSTRACT**

A device for use with a gripper is provided. A cartridge is provided that defines a plurality of cavities. A plurality of penetrating members are at least partially contained in the cavities of the cartridge. The penetrating members are slidably movable to extend outward from the cartridge to penetrate tissue. Each cavity has a longitudinal opening that provides access to an elongate portion of the penetrating member. A sterility barrier is coupled to the cartridge. The sterility barrier covers a plurality of the longitudinal openings. The sterility barrier is configured to be moved so that the elongate portion is accessed by the gripper without touching the barrier.

6 Claims, 51 Drawing Sheets

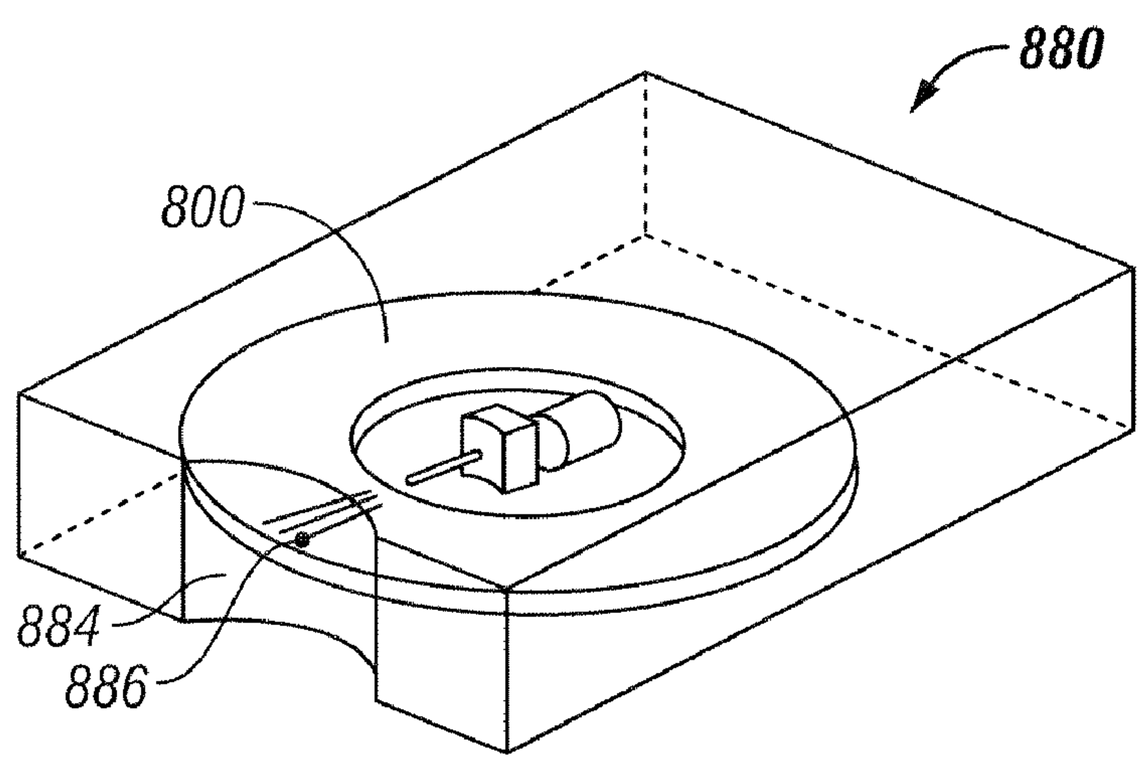

Related U.S. Application Data

18, 2002, now Pat. No. 7,226,461, which is a continuation-in-part of application No. 10/127,395, filed on Apr. 19, 2002, now Pat. No. 7,025,774.

(60) Provisional application No. 60/424,429, filed on Nov. 6, 2002, provisional application No. 60/422,988, filed on Nov. 1, 2002, provisional application No. 60/393,707, filed on Jul. 1, 2002, provisional application No. 60/393,706, filed on Jul. 1, 2002.

(56) **References Cited**

U.S. PATENT DOCUMENTS

2,880,876	A	4/1959	Dujardin	210/523
3,046,987	A	7/1962	Ehrlich	128/314
3,030,959	A	9/1962	Grunert	128/329
3,086,288	A	4/1963	Balamuth	30/277.4
3,090,384	A	5/1963	Baldwin et al.	604/272
3,208,452	A	9/1965	Stern	606/182
3,358,689	A	12/1967	Higgins	128/329
3,412,729	A	11/1968	Smith, Jr.	128/2.05
3,448,307	A	6/1969	Rudolph	310/23
3,494,358	A	2/1970	Grossenbacher	128/218
3,620,209	A	11/1971	Kravitz	601/79
3,626,929	A	12/1971	Sanz	128/2 R
3,628,026	A	12/1971	Cronin	250/214.1
3,665,672	A	5/1972	Speelman	53/435
3,673,475	A	6/1972	Britton	318/122
3,712,292	A	1/1973	Mielke, Jr.	128/2 G
3,712,293	A	1/1973	Mielke, Jr.	128/2
3,734,812	A	5/1973	Yazawa	428/107
3,742,954	A	7/1973	Strickland	128/302
3,780,960	A	12/1973	Tokuno	242/555.2
3,832,776	A	9/1974	Sawyer	30/272
3,836,148	A	9/1974	Manning	273/368
3,851,543	A	12/1974	Krom	74/493
3,853,010	A	12/1974	Christen	73/864.24
3,924,818	A	12/1975	Pfeifle	242/364.7
3,938,526	A	2/1976	Anderson	128/303.1
3,953,172	A	4/1976	Shapiro	23/230
3,971,365	A	7/1976	Smith	128/2.17
4,057,394	A	11/1977	Genshaw	23/230
4,077,406	A	3/1978	Sandhage	604/61
4,109,655	A	8/1978	Chaconac	128/253
4,139,011	A	2/1979	Benoit	606/182
4,154,228	A	5/1979	Feldstein	606/169
4,168,130	A	9/1979	Barth	404/99
4,184,486	A	1/1980	Papa	600/373
4,190,420	A	2/1980	Covington	422/63
4,191,193	A	3/1980	Seo	600/488
4,193,690	A	3/1980	Levenson	356/301
4,203,446	A	5/1980	Hofert	606/182
4,207,870	A	6/1980	Eldridge	128/766
4,223,674	A	9/1980	Fluent	604/504
4,224,125	A	9/1980	Nakamura	204/195 B
4,224,949	A	9/1980	Scott	128/734
4,230,118	A	10/1980	Holman et al.	128/314
4,240,439	A	12/1980	Abe	600/412
4,254,083	A	3/1981	Columbus	422/55
4,258,001	A	3/1981	Pierce	422/56
4,259,653	A	3/1981	McGonigal	310/15
4,299,230	A	11/1981	Kubota	600/300
4,301,412	A	11/1981	Hill	324/442
4,321,397	A	3/1982	Nix	548/366
4,338,174	A	7/1982	Tamura	204/195
4,340,669	A	7/1982	Bauer	435/14
4,350,762	A	9/1982	De Luca	435/10
4,353,984	A	10/1982	Yamada	435/14
4,356,826	A	11/1982	Kubota	600/300
4,360,016	A	11/1982	Sarrine	128/763
4,388,922	A	6/1983	Telang	604/319
4,391,905	A	7/1983	Bauer	435/14
4,391,906	A	7/1983	Bauer	435/14
4,392,933	A	7/1983	Nakamura	204/403.14
4,394,512	A	7/1983	Batz	548/365
4,397,556	A	8/1983	Muller	356/301
4,407,008	A	9/1983	Schmidt	356/301
4,411,266	A	10/1983	Cosman	128/303.18
4,414,975	A	11/1983	Ryder	128/314
4,418,037	A	11/1983	Katsuyama	422/56
4,420,564	A	12/1983	Tsuji	435/288
4,425,039	A	1/1984	Grant	356/35.5
4,426,451	A	1/1984	Columbus	436/518
4,426,884	A	1/1984	Polchaninoff	73/172
4,440,301	A	4/1984	Intengan	206/456
4,442,836	A	4/1984	Meinecke	128/314
4,442,972	A	4/1984	Sahay	236/1 EA
4,449,529	A	5/1984	Burns	606/182
4,462,405	A	7/1984	Ehrlich	606/182
4,469,110	A	9/1984	Slama	128/770
4,517,978	A	5/1985	Levin	128/314
4,518,384	A	5/1985	Tarello	604/61
4,523,994	A	6/1985	Shono	549/352
4,535,769	A	8/1985	Burns	128/314
4,535,773	A	8/1985	Yoon	606/185
4,537,197	A	8/1985	Hulka	128/633
4,539,988	A	9/1985	Shirley	128/314
4,545,382	A	10/1985	Higgins	128/635
4,553,541	A	11/1985	Burns	128/314
4,561,445	A	12/1985	Berke	128/642
4,577,630	A	3/1986	Nitzsche	128/314
4,580,564	A	4/1986	Anderson	502/8
4,580,565	A	4/1986	Cornell	128/314
4,586,819	A	5/1986	Tochigi	356/301
4,586,926	A	5/1986	Osborne	604/272
4,590,411	A	5/1986	Kelly	318/687
4,595,479	A	6/1986	Kimura	204/294
4,600,014	A	7/1986	Beraha	128/754
4,603,209	A	7/1986	Tsien	549/352
4,608,997	A	9/1986	Conway	128/763
4,615,340	A	10/1986	Cronenberg	128/635
4,616,649	A	10/1986	Burns	128/314
4,619,754	A	10/1986	Niki	204/290
4,622,974	A	11/1986	Coleman	128/634
4,624,253	A	11/1986	Burns	128/314
4,627,445	A	12/1986	Garcia	600/583
4,637,393	A	1/1987	Ray	128/305
4,637,403	A	1/1987	Garcia	600/583
4,643,189	A	2/1987	Mintz	128/314
4,648,408	A	3/1987	Hutcheson	128/770
4,648,714	A	3/1987	Benner	356/301
4,653,511	A	3/1987	Goch	128/763
4,653,513	A	3/1987	Dombrowski	600/578
4,655,225	A	4/1987	Dahne	600/316
4,661,768	A	4/1987	Carusillo	324/678
4,666,438	A	5/1987	Raulerson	604/272
4,676,244	A	6/1987	Enstrom	128/314
4,677,979	A	7/1987	Burns	128/314
4,678,277	A	7/1987	Delhaye	356/301
4,682,892	A	7/1987	Chawla	356/353
4,702,594	A	10/1987	Grant	356/35.5
4,711,245	A	12/1987	Higgins	128/635
4,712,460	A	12/1987	Allen	83/208
4,712,548	A	12/1987	Enstrom	128/314
4,714,462	A	12/1987	DiDomenico	604/67
4,715,374	A	12/1987	Maggio	128/314
4,731,330	A	3/1988	Hill	436/16
4,731,726	A	3/1988	Allen, III	600/300
4,734,360	A	3/1988	Phillips	435/25
4,735,203	A	4/1988	Ryder	128/314
4,737,458	A	4/1988	Batz	435/28
4,750,489	A	6/1988	Berkman	606/166
4,753,776	A	6/1988	Hillman	422/101
4,756,884	A	7/1988	Hillman	422/73
4,757,022	A	7/1988	Shults et al.	435/291
4,758,323	A	7/1988	Davis	204/403
4,774,192	A	9/1988	Terminiello	436/530
4,784,486	A	11/1988	Van Wagenen	356/301
4,787,398	A	11/1988	Garcia	600/583
4,790,979	A	12/1988	Teriniello	422/56
4,794,926	A	1/1989	Munsch et al.	606/183
4,797,283	A	1/1989	Allen	424/443
4,814,142	A	3/1989	Gleisner	422/56
4,814,661	A	3/1989	Ratzlaff	310/328

4,817,603	A	4/1989	Turner	606/182
4,818,493	A	4/1989	Coville	422/102
4,820,010	A	4/1989	Sciefres	385/43
4,820,399	A	4/1989	Senda	204/403
4,823,806	A	4/1989	Bajada	600/557
4,824,639	A	4/1989	Hildenbrand	422/56
RE32,922	E	5/1989	Levin	128/314
4,825,711	A	5/1989	Jensen	73/865.8
4,827,763	A	5/1989	Bourland	73/172
4,829,011	A	5/1989	Gibbons	436/512
4,830,959	A	5/1989	McNeil	435/53
4,836,904	A	6/1989	Armstron	204/294
4,840,893	A	6/1989	Hill	435/6
4,844,095	A	7/1989	Chiodo	128/314
4,845,392	A	7/1989	Mumbower	310/14
4,850,973	A	7/1989	Jordan	604/157
4,857,274	A	8/1989	Simon	422/72
4,868,129	A	9/1989	Gibbons	436/179
4,869,249	A	9/1989	Crossman	128/314
4,869,265	A	9/1989	McEwen	128/774
4,873,993	A	10/1989	Meserol	128/780
4,877,026	A	10/1989	de Laforcade	128/305
4,882,013	A	11/1989	Turner	204/1
4,883,055	A	11/1989	Merrick	128/633
4,883,068	A	11/1989	Dechow	128/760
4,886,499	A	12/1989	Cirelli	604/131
4,889,529	A	12/1989	Haindl	604/274
4,892,097	A	1/1990	Ranalletta	606/182
4,895,147	A	1/1990	Bodicky	606/182
4,895,156	A	1/1990	Schulze	600/342
4,897,173	A	1/1990	Nankai	204/403
4,900,424	A	2/1990	Birch	204/409
4,900,666	A	2/1990	Phillips	435/25
4,911,794	A	3/1990	Parce	204/1 T
4,920,977	A	5/1990	Haynes	128/770
4,924,879	A	5/1990	O'brien	600/583
4,935,346	A	6/1990	Phillips	435/14
4,938,218	A	7/1990	Goodman	128/633
4,940,468	A	7/1990	Petillo	606/170
4,944,304	A	7/1990	Nishina	128/667
4,945,045	A	7/1990	Forrest	435/25
4,946,795	A	8/1990	Gibbons	436/179
4,948,727	A	8/1990	Cass	435/18
4,948,961	A	8/1990	Hillman	250/252.1
4,952,373	A	8/1990	Sugarman	422/99
4,952,515	A	8/1990	Gleisner	436/169
4,953,552	A	9/1990	DeMarzo	128/635
4,953,976	A	9/1990	Adler-Golden	356/301
4,963,498	A	10/1990	Hillman	436/69
4,966,581	A	10/1990	Landau	604/72
4,966,646	A	10/1990	Zdeblick	156/633
4,966,671	A	10/1990	Nylander	204/153.14
4,975,581	A	12/1990	Robinson	250/339
4,976,724	A	12/1990	Nieto	606/182
4,977,910	A	12/1990	Miyahara	134/7
4,983,178	A	1/1991	Schnell	606/181
4,984,085	A	1/1991	Landowski	358/213
4,990,154	A	2/1991	Brown	606/182
4,995,402	A	2/1991	Smith	600/584
4,999,582	A	3/1991	Parks	324/438
5,001,054	A	3/1991	Wagner	435/14
5,001,873	A	3/1991	Rufin	451/39
5,004,923	A	4/1991	Hillman	250/341
5,010,772	A	4/1991	Bourland	73/862.04
5,010,774	A	4/1991	Kikuo	73/862.04
5,014,718	A	5/1991	Mitchen	128/771
5,019,974	A	5/1991	Beckers	364/413.02
5,026,388	A	6/1991	Ingalz	606/182
D318,331	S	7/1991	Phillips	D24/169
5,028,142	A	7/1991	Vladimir	366/273
5,029,583	A	7/1991	Meserol	600/316
5,035,704	A	7/1991	Lambert	606/182
5,039,617	A	8/1991	McDonald	436/69
5,043,143	A	8/1991	Shaw	422/65
5,046,496	A	9/1991	Betts	600/352
5,047,044	A	9/1991	Smith	606/182
5,049,373	A	9/1991	Tsien	549/352
5,049,487	A	9/1991	Phillips	435/4
5,054,487	A	10/1991	Clarke	128/633
5,054,499	A	10/1991	Swierczek	128/770
5,057,082	A	10/1991	Burchette, Jr.	604/164
5,057,277	A	10/1991	Mauze	422/56
5,059,394	A	10/1991	Phillips	422/68.1
5,059,789	A	10/1991	Salcudean	250/206.1
5,060,174	A	10/1991	Gross	702/139
5,062,898	A	11/1991	McDermott	134/7
5,070,874	A	12/1991	Barnes	128/633
5,070,886	A	12/1991	Mitchen	128/771
5,074,872	A	12/1991	Brown	606/182
5,077,017	A	12/1991	Gorin	422/100
5,077,199	A	12/1991	Basagni	435/14
5,080,865	A	1/1992	Leiner	422/68.1
5,086,229	A	2/1992	Rosenthal	250/341
5,089,112	A	2/1992	Skotheim	204/403
5,092,842	A	3/1992	Bechtold	604/135
5,094,943	A	3/1992	Siedel	435/25
5,096,669	A	3/1992	Lauks	204/403.02
5,097,810	A	3/1992	Fishman	600/556
5,100,427	A	3/1992	Crossman	606/182
5,100,428	A	3/1992	Mumford	606/182
5,104,380	A	4/1992	Holman	604/117
5,104,619	A	4/1992	Castro	422/56
5,104,813	A	4/1992	Besemer	436/179
5,107,764	A	4/1992	Gasparrini	101/425
5,108,564	A	4/1992	Szuminsky	204/153.12
5,108,889	A	4/1992	Smith	435/4
5,116,759	A	5/1992	Klainer	435/288
5,120,420	A	6/1992	Nankai	204/403
5,122,244	A	6/1992	Hoenes	204/153
5,126,034	A	6/1992	Carter	204/403
5,128,015	A	7/1992	Szuminsky	204/403
5,128,171	A	7/1992	Gleisner	427/2
5,132,801	A	7/1992	Yamano	358/213
5,133,730	A	7/1992	Biro	606/182
5,135,719	A	8/1992	Hillman	422/101
5,139,685	A	8/1992	Castro	210/767
5,140,161	A	8/1992	Hillman	250/341
5,141,868	A	8/1992	Shanks	435/288
5,144,139	A	9/1992	Hillman	250/341
5,145,565	A	9/1992	Kater	600/341
5,146,091	A	9/1992	Knudson	250/341.6
5,152,296	A	10/1992	Simons	128/670
5,152,775	A	10/1992	Ruppert	606/182
5,153,671	A	10/1992	Miles	356/301
5,156,611	A	10/1992	Haynes	606/181
5,162,525	A	11/1992	Masilamani	549/352
5,163,442	A	11/1992	Ono	128/760
5,164,598	A	11/1992	Hillman	250/341
5,167,619	A	12/1992	Wuchinich	604/22
5,170,364	A	12/1992	Gross	702/139
5,174,726	A	12/1992	Findlay	417/205
D332,490	S	1/1993	Brown	D24/146
5,178,142	A	1/1993	Harjunmaa	128/633
5,179,005	A	1/1993	Phillips	435/14
5,181,910	A	1/1993	Scanlon	604/67
5,181,914	A	1/1993	Zook	604/307
5,183,042	A	2/1993	Harjunmaa	128/633
5,185,256	A	2/1993	Nankai	435/174
5,187,100	A	2/1993	Matzinger	436/16
5,188,118	A	2/1993	Terwilliger	600/566
5,189,751	A	3/1993	Giuliani	15/22.1
5,192,415	A	3/1993	Yoshioka	204/403
5,194,391	A	3/1993	Mauze	436/166
5,196,025	A	3/1993	Ranalletta	606/182
5,201,324	A	4/1993	Swierczek	128/770
5,205,920	A	4/1993	Oyama	204/403
5,209,028	A	5/1993	McDermott	51/426
5,211,652	A	5/1993	Derbyshire	606/182
5,212,879	A	5/1993	Biro	29/437
5,215,587	A	6/1993	McConnellogue	118/699
5,216,597	A	6/1993	Beckers	364/413.02
5,217,476	A	6/1993	Wishinsky	606/167
5,217,480	A	6/1993	Haber	606/182
5,218,966	A	6/1993	Yamasawa	600/499
5,222,504	A	6/1993	Solomon	600/557
5,228,972	A	7/1993	Osaka	204/415
5,229,282	A	7/1993	Yoshioka	435/177
5,230,866	A	7/1993	Shartle	422/103

5,231,993 A 8/1993 Haber 128/770
5,241,969 A 9/1993 Carson 600/566
5,247,932 A 9/1993 Chung 128/633
5,249,583 A 10/1993 Mallaby 600/567
5,250,066 A 10/1993 Lambert 606/181
5,251,126 A 10/1993 Kahn 364/413.11
5,253,656 A 10/1993 Rincoe 128/782
5,256,998 A 10/1993 Becker 335/229
5,264,103 A 11/1993 Yoshioka 204/403
5,264,105 A 11/1993 Gregg 204/403
5,264,106 A 11/1993 McAleer 204/403
5,266,179 A 11/1993 Nankai 204/401
5,266,359 A 11/1993 Spielvogel 427/388.4
D342,673 S 12/1993 Cerola D24/147
5,267,974 A 12/1993 Lambert 604/195
5,272,087 A 12/1993 El Murr 435/291
5,277,181 A 1/1994 Mendelson 128/633
5,279,294 A 1/1994 Anderson 600/322
5,279,791 A 1/1994 Aldrich 422/58
5,282,822 A 2/1994 Macors 606/182
5,286,362 A 2/1994 Hoenes 204/403
5,286,364 A 2/1994 Yacynych 204/418
5,288,636 A 2/1994 Pollman 435/288
5,294,261 A 3/1994 McDermott 134/7
5,296,378 A 3/1994 Sakata 436/63
5,300,779 A 4/1994 Hillman 250/341
5,304,192 A 4/1994 Crouse 606/181
5,304,193 A 4/1994 Zhadanov 606/182
5,304,347 A 4/1994 Mann 422/67
5,304,468 A 4/1994 Phillips 435/14
5,306,623 A 4/1994 Kiser 435/14
5,307,263 A 4/1994 Brown 600/301
5,312,590 A 5/1994 Gunasingham 422/56
5,314,441 A 5/1994 Cusack 606/182
5,314,442 A 5/1994 Susumu 606/182
5,315,793 A 5/1994 Peterson 451/2
5,316,012 A 5/1994 Siegal 128/744
5,318,583 A 6/1994 Rabenau 606/182
5,318,584 A 6/1994 Lange 606/182
5,320,607 A 6/1994 Ishibashi 604/115
5,320,808 A 6/1994 Holen 422/64
5,324,302 A 6/1994 Crouse 606/181
5,324,303 A 6/1994 Strong 606/181
5,330,634 A 7/1994 Wong 205/777.5
5,332,479 A 7/1994 Uenoyama 204/153.12
5,341,206 A 8/1994 Pittaro 356/301
5,342,382 A 8/1994 Brinkerhoff 606/184
5,344,703 A 9/1994 Kovar 428/312.6
5,350,392 A 9/1994 Purcell 606/182
5,352,351 A 10/1994 White 204/406
5,354,287 A 10/1994 Wacks 604/232
5,354,447 A 10/1994 Uenoyama 204/403
5,356,420 A 10/1994 Czernecki 606/182
5,360,410 A 11/1994 Wacks 604/232
5,365,699 A 11/1994 Armstrong 451/7
5,366,469 A 11/1994 Steg 606/182
5,366,470 A 11/1994 Ramel 606/183
5,366,609 A 11/1994 White 204/403
5,368,047 A 11/1994 Suzuki 600/578
5,370,509 A 12/1994 Golding 417/423.1
5,371,687 A 12/1994 Holmes 364/514
5,372,135 A 12/1994 Mendelson 600/322
5,375,397 A 12/1994 Ferrand 54/66
5,378,628 A 1/1995 Gratzel 435/288
5,382,346 A 1/1995 Uenoyama 204/403
5,383,885 A 1/1995 Bland 606/182
5,389,534 A 2/1995 Gentzkow 435/180
5,390,450 A 2/1995 Goenka 451/39
5,393,903 A 2/1995 Graetzel 556/137
5,395,339 A 3/1995 Talonn 604/111
5,395,387 A 3/1995 Burns 606/181
5,397,334 A 3/1995 Schenk 606/182
5,401,376 A 3/1995 Foos 204/415
5,402,798 A 4/1995 Swierczek 128/770
5,405,283 A 4/1995 Goenka 451/39
5,405,510 A 4/1995 Betts 205/782
5,405,511 A 4/1995 White 204/153.1
5,407,545 A 4/1995 Hirose 204/153.12
5,407,554 A 4/1995 Saurer 204/403
5,407,818 A 4/1995 Gentezkow 435/180
5,409,583 A 4/1995 Yoshioka 204/153.12
5,409,664 A 4/1995 Allen 422/56
5,410,059 A 4/1995 Fraser 546/10
5,415,169 A 5/1995 Siczek 600/427
5,418,142 A 5/1995 Kiser 435/14
5,423,847 A 6/1995 Strong et al. 606/182
5,424,545 A 6/1995 Block 350/343
5,426,032 A 6/1995 Phillips 435/14
5,436,161 A 7/1995 Bergstrom 435/291
5,437,999 A 8/1995 Diebold 435/288
5,438,271 A 8/1995 White 324/444
5,443,701 A 8/1995 Willner 204/153
5,445,920 A 8/1995 Saito 430/311
D362,719 S 9/1995 Kaplan D24/147
5,453,360 A 9/1995 Yu 435/28
5,454,828 A 10/1995 Schraga 606/181
5,456,875 A 10/1995 Lambert 264/328.1
5,459,325 A 10/1995 Hueton 250/458.1
5,460,182 A 10/1995 Goodman 600/342
5,462,533 A 10/1995 Daugherty 604/164
5,464,418 A 11/1995 Schraga 606/182
5,465,722 A 11/1995 Fort 600/447
5,471,102 A 11/1995 Becker 310/50
5,472,427 A 12/1995 Rammler 604/164.01
5,474,084 A 12/1995 Cunniff 600/557
5,476,474 A 12/1995 Davis 606/182
5,480,387 A 1/1996 Gabriel 604/134
5,487,748 A 1/1996 Marshall 606/182
D367,109 S 2/1996 Ryner D24/224
5,490,505 A 2/1996 Diab 600/323
5,496,274 A 3/1996 Graves 604/86
5,496,453 A 3/1996 Uenoyama 205/777.5
5,498,542 A 3/1996 Corey 435/283.1
5,501,836 A 3/1996 Myerson 42/57
5,501,893 A 3/1996 Laermer 428/161
5,507,288 A 4/1996 Bocker 128/633
5,507,629 A 4/1996 Jarvik 417/423.3
5,508,171 A 4/1996 Walling 205/777.5
5,509,410 A 4/1996 Hill 128/637
5,510,266 A 4/1996 Bonner et al. 436/43
5,512,159 A 4/1996 Yoshioka 204/403
5,514,152 A 5/1996 Smith 606/182
5,515,170 A 5/1996 Matzinger 356/423
5,518,006 A 5/1996 Mawhirt 128/770
D371,198 S 6/1996 Savage D24/169
5,524,636 A 6/1996 Sarvazyan 128/774
5,525,511 A 6/1996 D'Costa 435/287.9
5,525,518 A 6/1996 Lundsgaard 436/68
5,526,120 A 6/1996 Jina 356/446
5,527,333 A 6/1996 Nikkels 606/182
5,527,334 A 6/1996 Kanner 606/182
5,529,074 A 6/1996 Greenfield 600/557
5,540,676 A 7/1996 Freiberg 606/3
5,540,709 A 7/1996 Ramel 606/183
5,543,326 A 8/1996 Heller 435/287.9
5,545,174 A 8/1996 Schenk 606/182
5,545,291 A 8/1996 Smith 438/107
5,547,702 A 8/1996 Gleisner 427/2.13
D373,419 S 9/1996 Muramatsu D24/165
5,554,153 A 9/1996 Costello 606/9
5,554,166 A 9/1996 Lange 606/182
5,558,834 A 9/1996 Chu 422/55
5,562,384 A 10/1996 Alvite 414/226.01
5,562,696 A 10/1996 Nobles 606/185
5,563,031 A 10/1996 Yu 435/4
5,563,042 A 10/1996 Phillips 435/14
5,569,286 A 10/1996 Peckham 606/181
5,569,287 A 10/1996 Tezuka 606/182
5,571,132 A 11/1996 Mawhirt 606/182
5,575,284 A 11/1996 Athan 600/323
5,575,403 A 11/1996 Charlton 221/31
5,575,895 A 11/1996 Ikeda 204/403
5,582,697 A 12/1996 Ikeda 204/403
5,584,846 A 12/1996 Mawhirt 606/181
5,591,139 A 1/1997 Lin 604/264
5,593,852 A 1/1997 Heller 435/14
5,599,501 A 2/1997 Carey 422/64
5,605,837 A 2/1997 Karimi 436/14

D378,612	S	3/1997	Clark	D24/169
5,608,006	A	3/1997	Myerson	525/54.1
5,609,749	A	3/1997	Yamauchi	205/777.5
5,611,809	A	3/1997	Marshall	606/181
5,611,810	A	3/1997	Arnold	606/185
5,613,978	A	3/1997	Harding	606/181
5,616,135	A	4/1997	Thorne	604/192
5,617,851	A	4/1997	Lipkovker	600/573
5,618,297	A	4/1997	Hart	606/185
5,620,279	A	4/1997	Genshaw	204/402
5,620,863	A	4/1997	Tomasco	435/14
5,624,458	A	4/1997	Lipscher	606/181
5,624,459	A	4/1997	Kortenbach	606/185
5,624,537	A	4/1997	Turner	204/403
D379,516	S	5/1997	Rutter	D24/146
5,628,764	A	5/1997	Schraga	606/182
5,628,765	A	5/1997	Susumu	606/182
5,628,890	A	5/1997	Carter	204/403
5,628,961	A	5/1997	Davis	422/63
5,630,828	A	5/1997	Mawhirt	606/187
5,630,986	A	5/1997	Charlton	422/64
5,632,410	A	5/1997	Moulton	221/79
5,640,954	A	6/1997	Pfeiffer	128/635
D381,591	S	7/1997	Rice	D10/81
5,643,306	A	7/1997	Schraga	606/182
5,643,308	A	7/1997	Markman	606/187
5,645,555	A	7/1997	Davis	606/182
5,647,851	A	7/1997	Pokras	604/131
5,650,062	A	7/1997	Ikeda	205/778
5,653,863	A	8/1997	Genshaw	205/777.5
5,657,760	A	8/1997	Ying et al.	128/660.03
5,658,444	A	8/1997	Black	204/415
5,660,791	A	8/1997	Brenneman	422/58
D383,550	S	9/1997	Larson	D24/225
5,662,127	A	9/1997	De Vaughn	128/765
5,662,672	A	9/1997	Pambianchi	606/181
5,666,966	A	9/1997	Horie	128/760
5,676,143	A	10/1997	Simonsen	128/633
5,678,306	A	10/1997	Bozeman	29/888.025
5,680,858	A	10/1997	Hansen et al.	128/635
5,680,872	A	10/1997	Sesekura	128/760
5,682,233	A	10/1997	Brinda	356/246
5,682,884	A	11/1997	Hill	128/637
5,683,562	A	11/1997	Schaffar	204/403
5,691,898	A	11/1997	Rosenberg	700/85
5,692,514	A	12/1997	Bowman	600/504
5,695,947	A	12/1997	Guo	435/11
5,700,695	A	12/1997	Yassinzadeh	436/180
5,705,045	A	1/1998	Park	204/403
5,707,384	A	1/1998	Kim	606/181
5,708,247	A	1/1998	McAleer	204/403
5,709,668	A	1/1998	Wacks	604/232
5,709,699	A	1/1998	Warner	606/181
5,710,011	A	1/1998	Forrow	435/25
5,714,123	A	2/1998	Sohrab	422/99
5,714,390	A	2/1998	Hallowitz	436/526
5,719,034	A	2/1998	Kiser	435/14
5,720,862	A	2/1998	Hamamoto	204/403
5,720,924	A	2/1998	Eikmeier	422/102
D392,391	S	3/1998	Douglas	D24/225
D392,740	S	3/1998	Yung	D24/169
5,723,284	A	3/1998	Ye	435/4
5,727,548	A	3/1998	Hill	128/637
5,729,905	A	3/1998	Mathiasmeier	33/3 R
5,730,753	A	3/1998	Susumu	606/181
5,733,085	A	3/1998	Shida	411/442
5,733,300	A	3/1998	Pambianchi	606/181
D393,716	S	4/1998	Brenneman	D24/147
D393,717	S	4/1998	Brenneman	D24/147
5,735,868	A	4/1998	Lee	606/189
5,736,103	A	4/1998	Pugh	422/68.1
5,738,244	A	4/1998	Charlton et al.	221/26
5,741,228	A	4/1998	Lambrecht	604/93
5,741,634	A	4/1998	Nozoe	435/4
RE35,803	E	5/1998	Lange	606/182
5,746,217	A	5/1998	Erickson	128/760
5,746,761	A	5/1998	Turchin	606/181
5,746,898	A	5/1998	Preidel	204/403
5,753,429	A	5/1998	Pugh	435/4
5,753,452	A	5/1998	Smith	435/14
5,755,228	A	5/1998	Wilson	600/459
5,755,733	A	5/1998	Susumu	606/182
5,758,643	A	6/1998	Wong	600/309
5,759,364	A	6/1998	Charlton	204/403
5,762,770	A	6/1998	Pritchard	204/403
5,770,086	A	6/1998	Indriksons	210/643
5,770,369	A	6/1998	Meade	435/6
5,772,586	A	6/1998	Heinonen	600/300
5,772,677	A	6/1998	Mawhirt	606/181
5,773,270	A	6/1998	D'Orazio	435/177
5,776,157	A	7/1998	Thorne	606/182
5,776,719	A	7/1998	Douglas	435/28
5,779,365	A	7/1998	Takaki	374/161
5,780,304	A	7/1998	Matzinger	436/169
5,782,770	A	7/1998	Mooradian	600/476
5,782,852	A	7/1998	Foggia	606/182
5,788,651	A	8/1998	Weilandt	600/567
5,788,652	A	8/1998	Rahn	600/577
5,789,255	A	8/1998	Yu	536/95
5,794,219	A	8/1998	Brown	705/37
5,795,725	A	8/1998	Buechler	435/7.1
5,795,774	A	8/1998	Matsumoto	435/287.9
5,797,940	A	8/1998	Mawhirt	606/167
5,797,942	A	8/1998	Schraga	606/182
5,798,030	A	8/1998	Raguse	204/403
5,798,031	A	8/1998	Charlton	204/403
5,800,781	A	9/1998	Gavin	422/73
5,801,057	A	9/1998	Smart	436/68
5,807,375	A	9/1998	Gross	604/890.1
5,810,199	A	9/1998	Charlton	221/31
D399,566	S	10/1998	Sohrab	D24/169
5,820,551	A	10/1998	Hill	600/347
5,822,715	A	10/1998	Worthington	702/19
5,823,973	A	10/1998	Racchini	600/573
5,824,491	A	10/1998	Priest	435/28
5,827,181	A	10/1998	Dias	600/322
5,828,943	A	10/1998	Brown	434/258
5,829,589	A	11/1998	Nguyen	206/366
5,830,219	A	11/1998	Bird et al.	606/130
5,832,448	A	11/1998	Brown	705/2
5,840,020	A	11/1998	Heinonen	600/309
5,840,171	A	11/1998	Birch	205/335
5,843,691	A	12/1998	Douglas	435/14
5,843,692	A	12/1998	Phillips	435/14
5,846,216	A	12/1998	Gonzales	604/2
5,846,486	A	12/1998	Pugh	422/56
5,846,490	A	12/1998	Yokota	422/66
5,849,174	A	12/1998	Sanghera	205/775
5,853,373	A	12/1998	Griffith	600/554
5,854,074	A	12/1998	Charlton	436/46
D403,975	S	1/1999	Douglas	D10/81
5,855,377	A	1/1999	Murphy	279/50
5,855,801	A	1/1999	Lin	216/2
5,856,174	A	1/1999	Lipshutz	435/286.5
5,856,195	A	1/1999	Charlton	436/50
5,857,967	A	1/1999	Frid	600/301
5,857,983	A	1/1999	Douglas	600/538
5,858,804	A	1/1999	Zanzucchi	506/9
5,860,922	A	1/1999	Gordon et al.	600/431
5,863,800	A	1/1999	Eikmeier	436/48
5,866,353	A	2/1999	Berneth	435/26
5,868,135	A	2/1999	Kaufman	128/630
5,868,772	A	2/1999	LeVaughn	606/181
5,869,972	A	2/1999	Birch	324/439
5,871,494	A	2/1999	Simons	606/181
5,872,713	A	2/1999	Douglas	702/85
5,873,887	A	2/1999	King	606/182
5,876,351	A	3/1999	Rohde	600/523
5,876,957	A	3/1999	Douglas	435/28
5,879,163	A	3/1999	Brown	434/236
5,879,310	A	3/1999	Sopp	600/578
5,879,311	A	3/1999	Duchon	600/583
5,879,373	A	3/1999	Roeper	606/344
5,880,829	A	3/1999	Kauhaniemi	356/246
5,882,494	A	3/1999	van Antwerp	204/403
5,885,211	A	3/1999	Eppstein	600/309
5,886,056	A	3/1999	Hershkowitz	518/703
5,887,133	A	3/1999	Brown	395/200.3

5,890,128	A	3/1999	Diaz	705/2
RE36,191	E	4/1999	Solomon	395/308
5,891,053	A	4/1999	Sesekura	600/583
5,893,848	A	4/1999	Negus	606/41
5,893,870	A	4/1999	Talen	606/201
5,897,493	A	4/1999	Brown	600/300
5,897,569	A	4/1999	Kellogg	606/169
5,899,855	A	5/1999	Brown	600/301
5,899,915	A	5/1999	Saadat	606/170
5,900,130	A	5/1999	Benvegnu	204/453
5,902,731	A	5/1999	Ouyang	435/26
5,906,921	A	5/1999	Ikeda	435/25
D411,619	S	6/1999	Duchon	D24/146
5,908,416	A	6/1999	Costello	606/9
5,911,937	A	6/1999	Hekal	264/255
5,912,134	A	6/1999	Shartle	435/7.24
5,913,310	A	6/1999	Brown	128/897
5,916,156	A	6/1999	Hildenbrand	600/347
5,916,229	A	6/1999	Evans	606/171
5,916,230	A	6/1999	Brenneman	606/172
5,918,603	A	7/1999	Brown	128/897
5,919,711	A	7/1999	Boyd	436/178
5,921,963	A	7/1999	Erez	604/192
5,922,188	A	7/1999	Ikeda	204/777.5
5,922,530	A	7/1999	Yu	435/4
5,922,591	A	7/1999	Anderson	435/287.2
RE36,268	E	8/1999	Szuminsky et al.	205/777.5
5,931,794	A	8/1999	Pitesky	600/556
5,933,136	A	8/1999	Brown	345/327
5,935,075	A	8/1999	Casscells et al.	600/474
5,938,635	A	8/1999	Kuhle	604/506
5,938,679	A	8/1999	Freeman	606/181
5,940,153	A	8/1999	Castaneda	349/58
5,942,102	A	8/1999	Hodges	205/775
5,942,189	A	8/1999	Wolfbeis	422/82.08
5,947,957	A	9/1999	Morris	606/13
5,951,300	A	9/1999	Brown	434/236
5,951,492	A	9/1999	Douglas	600/583
5,951,493	A	9/1999	Douglas et al.	600/583
5,951,582	A	9/1999	Thorne	606/182
5,951,836	A	9/1999	McAleer	204/403
5,954,738	A	9/1999	LeVaughn	606/181
5,956,501	A	9/1999	Brown	395/500.32
5,957,846	A	9/1999	Chiang	600/447
5,958,199	A	9/1999	Miyamoto	204/403
5,959,098	A	9/1999	Goldberg	536/25.3
5,960,403	A	9/1999	Brown	705/2
5,961,451	A	10/1999	Reber	600/322
5,964,718	A	10/1999	Duchon	600/583
5,965,380	A	10/1999	Heller	435/14
5,968,063	A	10/1999	Chu	606/185
5,968,760	A	10/1999	Phillips	435/14
5,968,836	A	10/1999	Matzinger	436/169
5,971,941	A	10/1999	Simons	606/573
5,972,199	A	10/1999	Heller	205/777.5
5,972,294	A	10/1999	Smith	422/58
5,972,715	A	10/1999	Celentano	436/164
5,974,124	A	10/1999	Schlueter	379/106.02
5,976,085	A	11/1999	Kimball	600/309
5,983,193	A	11/1999	Heinonen	705/2
5,985,116	A	11/1999	Ikeda	204/403
5,985,559	A	11/1999	Brown	435/6
5,986,754	A	11/1999	Harding	356/246
5,993,400	A	11/1999	Rincoe	600/595
5,993,434	A	11/1999	Dev	604/501
D417,504	S	12/1999	Love	D24/169
5,997,476	A	12/1999	Brown	600/300
5,997,561	A	12/1999	Boecker	606/182
5,997,817	A	12/1999	Crismore	422/58
5,997,818	A	12/1999	Hacker	422/681
6,001,067	A	12/1999	Shults	600/584
6,007,497	A	12/1999	Huitema	600/567
D418,602	S	1/2000	Prokop	D24/169
6,014,577	A	1/2000	Henning	600/345
6,015,392	A	1/2000	Douglas	600/583
6,018,289	A	1/2000	Sekura	340/309.4
6,020,110	A	2/2000	Williams	430/315
6,022,324	A	2/2000	Skinner	600/566
6,022,366	A	2/2000	Schraga	606/181
6,022,748	A	2/2000	Charych	436/527
6,023,629	A	2/2000	Tamada	600/347
6,023,686	A	2/2000	Brown	705/37
6,027,459	A	2/2000	Shain	600/573
6,030,399	A	2/2000	Ignotz	606/167
6,030,827	A	2/2000	Davis	435/287
6,030,967	A	2/2000	Marui	514/215
6,032,059	A	2/2000	Henning	600/345
6,032,119	A	2/2000	Brown	705/2
6,033,421	A	3/2000	Theiss	606/186
6,033,866	A	3/2000	Guo	435/14
6,036,924	A	3/2000	Simons	422/100
6,037,178	A	3/2000	Leiner	436/50
6,041,253	A	3/2000	Kost	604/20
6,045,567	A	4/2000	Taylor	606/181
6,046,055	A	4/2000	Wolfbeis	436/172
6,048,352	A	4/2000	Douglas	606/181
D424,696	S	5/2000	Ray	D24/169
6,056,701	A	5/2000	Duchon	600/583
6,059,815	A	5/2000	Lee	606/209
6,060,327	A	5/2000	Keen	436/518
6,061,128	A	5/2000	Zweig	356/243.4
6,063,039	A	5/2000	Cunningham	600/573
6,066,103	A	5/2000	Duchon	600/583
6,066,243	A	5/2000	Anderson	422/82.01
6,066,296	A	5/2000	Brady	422/63
6,067,463	A	5/2000	Jeng	600/336
6,068,615	A	5/2000	Brown	604/207
D426,638	S	6/2000	Ray	D24/169
6,070,761	A	6/2000	Bloom	222/81
6,071,249	A	6/2000	Cunningham	600/578
6,071,250	A	6/2000	Douglas	600/583
6,071,251	A	6/2000	Cunningham	600/584
6,071,294	A	6/2000	Simons	606/181
6,071,391	A	6/2000	Gotoh	204/403
6,074,360	A	6/2000	Haar et al.	604/57
6,077,408	A	6/2000	Miyamoto	204/403
6,080,106	A	6/2000	Lloyd	600/300
6,080,172	A	6/2000	Fujiwara	606/166
D428,150	S	7/2000	Ruf	D24/146
6,083,196	A	7/2000	Trautman	604/46
6,083,710	A	7/2000	Heller	435/14
6,084,660	A	7/2000	Shartle	356/39
6,085,576	A	7/2000	Sunshine	73/29.01
6,086,544	A	7/2000	Hibner	600/568
6,086,545	A	7/2000	Roe	600/570
6,086,562	A	7/2000	Jacobsen	604/156
6,090,078	A	7/2000	Erskine	604/198
6,091,975	A	7/2000	Daddona	600/345
6,093,146	A	7/2000	Filangeri	600/300
6,093,156	A	7/2000	Cunningham et al.	600/573
D428,993	S	8/2000	Lubs	D24/165
6,099,484	A	8/2000	Douglas	600/583
6,099,802	A	8/2000	Pugh	422/58
6,100,107	A	8/2000	Lei	438/50
6,101,478	A	8/2000	Brown	705/2
6,102,933	A	8/2000	Lee	606/209
6,103,033	A	8/2000	Say	156/73.1
6,103,509	A	8/2000	Sode	435/190
6,104,940	A	8/2000	Watanabe	600/345
6,106,751	A	8/2000	Talbot	264/81
6,107,083	A	8/2000	Collins	435/288
6,113,578	A	9/2000	Brown	604/207
6,117,630	A	9/2000	Reber	435/4
6,118,126	A	9/2000	Zanzucchi	250/458.1
6,119,033	A	9/2000	Spigelman	600/426
6,120,462	A	9/2000	Hibner	600/566
6,120,676	A	9/2000	Heller	205/777.5
6,121,009	A	9/2000	Heller	435/14
6,122,536	A	9/2000	Sun	600/341
6,126,804	A	10/2000	Andresen	204/601
6,126,899	A	10/2000	Woudenberg	422/50
6,129,823	A	10/2000	Hughes	204/403.01
6,132,449	A	10/2000	Lum	606/181
6,133,837	A	10/2000	Riley	340/573.1
6,134,461	A	10/2000	Say	600/345
6,136,013	A	10/2000	Marshall	606/167
6,139,562	A	10/2000	Mauze	606/171
6,143,164	A	11/2000	Heller	600/583

6,144,837 A 11/2000 Quy ..... 434/307 R
6,149,203 A 11/2000 Hanlon 283/72
6,151,586 A 11/2000 Brown 705/14
6,152,875 A 11/2000 Hakamata 600/319
6,152,942 A 11/2000 Brenneman 606/181
6,153,069 A 11/2000 Pottgen 204/403
RE36,991 E 12/2000 Yamamoto 204/403
6,155,267 A 12/2000 Nelson 128/899
6,155,992 A 12/2000 Henning et al. 600/583
6,156,051 A 12/2000 Schraga 606/181
6,157,442 A 12/2000 Raskas 356/39
6,159,147 A 12/2000 Lichter 600/300
6,159,424 A 12/2000 Kauhaniemi 422/63
6,161,095 A 12/2000 Brown 705/2
6,162,397 A 12/2000 Jurik 422/56
6,162,611 A 12/2000 Heller 435/14
6,167,362 A 12/2000 Brown 703/11
6,167,386 A 12/2000 Brown 705/37
6,168,563 B1 1/2001 Brown 600/301
6,168,957 B1 1/2001 Matzinger 436/518
6,171,325 B1 1/2001 Mauze et al. 606/171
6,172,743 B1 1/2001 Kley et al. 356/39
6,175,752 B1 1/2001 Say 600/345
6,176,847 B1 1/2001 Humphreys 604/246
6,176,865 B1 1/2001 Mauze 606/171
6,177,000 B1 1/2001 Peterson 205/777.5
6,177,931 B1 1/2001 Alexander 725/52
6,183,489 B1 2/2001 Douglas 606/181
6,186,145 B1 2/2001 Brown 128/897
6,190,612 B1 2/2001 Berger 422/82.07
6,191,852 B1 2/2001 Paffhausen 356/244
6,192,891 B1 2/2001 Gravel 128/920
6,193,673 B1 2/2001 Viola 600/568
6,193,873 B1 2/2001 Ohara 205/792
6,194,900 B1 2/2001 Freeman 324/321
6,197,040 B1 3/2001 LeVaughn 606/182
6,197,257 B1 3/2001 Raskas 422/82.05
6,200,773 B1 3/2001 Ouyang 435/26
6,203,504 B1 3/2001 Latterell 600/576
6,206,841 B1 3/2001 Cunningham et al. 600/584
6,210,133 B1 4/2001 Aboul-Hosn 417/423.1
6,210,272 B1 4/2001 Brown 463/1
6,210,369 B1 4/2001 Wilmot 604/157
6,210,420 B1 4/2001 Mauze 606/182
6,210,421 B1 4/2001 Bocker 606/182
6,212,417 B1 4/2001 Ikeda 204/403.14
6,214,626 B1 4/2001 Meller 436/165
6,214,804 B1 4/2001 Felgner 514/44
6,218,571 B1 4/2001 Zheng 562/61
6,219,574 B1 4/2001 Cormier 604/20
6,221,023 B1 4/2001 Matsuba 600/486
6,221,238 B1 4/2001 Grundig 205/777.5
6,225,078 B1 5/2001 Ikeda 435/25
6,228,100 B1 * 5/2001 Schraga 606/183
6,230,051 B1 5/2001 Cormier 604/20
6,230,501 B1 5/2001 Bailey 62/51.1
6,231,531 B1 5/2001 Lum 601/46
6,233,471 B1 5/2001 Berner 600/345
6,233,539 B1 5/2001 Brown 703/11
6,234,772 B1 5/2001 Wampler 417/423.12
6,240,393 B1 5/2001 Brown 705/1
D444,235 S 6/2001 Roberts D24/169
6,241,862 B1 6/2001 McAleer 204/403
6,242,207 B1 6/2001 Douglas 435/25
6,245,060 B1 6/2001 Loomis 606/9
6,245,215 B1 6/2001 Douglas 205/775
6,246,992 B1 6/2001 Brown 705/2
6,248,065 B1 6/2001 Brown 600/300
6,251,083 B1 6/2001 Yum 600/584
6,251,121 B1 6/2001 Saadat 606/180
6,251,260 B1 6/2001 Heller 205/777.5
6,251,344 B1 6/2001 Goldstein 422/123
D444,557 S 7/2001 Levaughn D24/146
6,254,831 B1 7/2001 Barnard 422/82.08
6,256,533 B1 7/2001 Vuzhakov 604/21
6,258,111 B1 7/2001 Ross 606/171
6,258,229 B1 7/2001 Winarta 204/403
6,258,254 B1 7/2001 Miyamoto 205/777.5
6,261,241 B1 7/2001 Burbank 600/564
6,261,245 B1 7/2001 Kawai 600/576
6,261,519 B1 7/2001 Harding 422/58
6,264,635 B1 7/2001 Wampler 604/151
6,268,161 B1 7/2001 Han 435/14
6,268,162 B1 7/2001 Phillips 435/14
6,269,314 B1 7/2001 Iitawaki 702/23
6,270,455 B1 8/2001 Brown 600/300
6,270,637 B1 8/2001 Crismore 204/403
6,272,359 B1 8/2001 Kivela 455/567
6,272,364 B1 8/2001 Kurnik 600/345
6,275,717 B1 8/2001 Gross 600/345
6,280,254 B1 8/2001 Wu 439/630
6,281,006 B1 8/2001 Heller 435/287.9
6,238,926 B1 9/2001 Cunningham 600/573
6,283,926 B1 9/2001 Cunningham 600/573
6,283,982 B1 9/2001 Levaughn 606/172
6,284,478 B1 9/2001 Heller 435/14
6,285,448 B1 9/2001 Kuenstner 356/39
6,285,454 B1 9/2001 Douglas 356/446
6,289,254 B1 9/2001 Shimizu 700/96
6,290,683 B1 9/2001 Erez 604/273
6,294,897 B1 9/2001 Champlin 320/153
6,295,506 B1 9/2001 Heinonen 702/104
6,299,578 B1 10/2001 Kurnik 600/309
6,299,596 B1 10/2001 Ding 604/96.01
6,299,757 B1 10/2001 Feldman 205/775
6,302,844 B1 10/2001 Walker 600/300
6,302,855 B1 10/2001 Lav 600/584
6,305,804 B1 10/2001 Rice 351/221
6,306,104 B1 10/2001 Cunningham 600/573
6,306,152 B1 10/2001 Verdonk 606/182
6,306,347 B1 10/2001 Mason 422/58
6,309,351 B1 10/2001 Kurnik 600/309
6,309,535 B1 10/2001 Williams 205/777.5
6,312,612 B1 11/2001 Sherman 216/2
6,315,738 B1 11/2001 Nishikawa 600/583
6,318,970 B1 11/2001 Backhouse 417/92
6,319,210 B1 11/2001 Douglas 600/583
6,322,574 B1 11/2001 Lloyd 606/181
6,322,808 B1 11/2001 Trautman 424/448
6,322,963 B1 11/2001 Bauer 435/4
6,329,161 B1 12/2001 Heller 435/14
6,330,426 B2 12/2001 Brown ..... 434/307 R
6,331,163 B1 12/2001 Kaplan 600/486
6,332,871 B1 12/2001 Douglas 600/583
6,334,363 B1 1/2002 Testud 73/862
6,334,778 B1 1/2002 Brown 434/258
6,334,856 B1 1/2002 Allen 604/191
6,335,203 B1 1/2002 Patel 436/169
6,335,856 B1 1/2002 Allen 604/191
6,336,900 B1 1/2002 Alleckson 600/485
6,338,790 B1 1/2002 Feldman 205/777.5
6,346,120 B1 2/2002 Yamazaki 623/3.13
6,349,229 B1 2/2002 Watanabe 600/345
6,350,273 B1 2/2002 Minagawa 606/186
6,350,451 B1 2/2002 Horn 424/184.1
6,352,514 B1 3/2002 Douglas 600/583
6,352,523 B1 3/2002 Brown 604/207
6,353,753 B1 3/2002 Flock 600/473
6,364,889 B1 4/2002 Kheiri et al. 606/181
6,364,890 B1 4/2002 Lum 606/181
6,368,273 B1 4/2002 Brown 600/300
6,375,469 B1 4/2002 Brown 434/236
6,375,627 B1 4/2002 Mauze 600/584
6,379,301 B1 4/2002 Worthington 600/309
6,379,317 B1 4/2002 Kintzig 600/573
6,379,324 B1 4/2002 Gartstein 604/22
6,379,969 B1 4/2002 Mauze 436/68
6,381,577 B1 4/2002 Brown 705/2
D456,910 S 5/2002 Clark D24/225
6,387,709 B1 5/2002 Mason 436/164
6,391,005 B1 5/2002 Lum 604/117
6,395,227 B1 5/2002 Kiser 422/56
6,398,522 B2 6/2002 Skill 417/410.3
6,398,562 B1 6/2002 Butler 439/91
6,399,394 B1 6/2002 Dahm 436/180
6,402,701 B1 6/2002 Kaplan 600/567
6,402,704 B1 6/2002 Mcmorrow 600/576
6,409,740 B1 6/2002 Kuhr 606/182

6,413,410 B1 7/2002 Hodges 205/775
6,413,411 B1 7/2002 Pottgen 205/777.5
6,415,821 B2 7/2002 Kamholz 137/827
6,420,128 B1 7/2002 Ouyang 435/14
6,421,633 B1 7/2002 Heinonen 703/11
6,423,014 B1 7/2002 Churchill 600/587
6,428,664 B1 8/2002 Bhullar 204/403.03
6,436,055 B1 8/2002 Roe 600/584
6,436,256 B1 8/2002 Williams 204/403.06
6,436,721 B1 8/2002 Kuo 436/514
6,440,645 B1 8/2002 Yon-Hin 430/322
6,444,115 B1 9/2002 Hodges 205/792
6,447,119 B1 9/2002 Stewart et al. 351/212
6,447,265 B1 9/2002 Antaki 417/354
6,451,040 B1 9/2002 Purcell 606/181
6,453,810 B1 9/2002 Rossmeisl 101/123
6,458,258 B2 10/2002 Taniike 204/403
6,461,496 B1 10/2002 Feldman 205/777.5
6,462,162 B2 10/2002 van Antwerp 528/77
6,464,649 B1 10/2002 Duchon 600/583
6,471,903 B2 10/2002 Sherman 264/328.1
6,472,220 B1 10/2002 Simons 436/63
6,475,360 B1 11/2002 Hodges 204/403.14
6,475,372 B1 11/2002 Ohara 205/777.5
6,475,436 B1 11/2002 Schabbach 422/64
6,475,750 B1 11/2002 Han et al. 435/14
6,477,394 B2 11/2002 Rice 600/318
6,477,424 B1 11/2002 Thompson 607/60
6,484,046 B1 11/2002 Say 600/345
6,485,439 B1 11/2002 Roe 600/578
6,485,461 B1 11/2002 Mason 604/132
6,485,923 B1 11/2002 Yani 435/14
6,488,827 B1 12/2002 Shartle 204/403
6,488,891 B2 12/2002 Mason 422/58
6,489,133 B2 12/2002 Phillips 435/14
6,491,709 B2 12/2002 Sharma 606/181
6,491,870 B2 12/2002 Patel 422/58
6,494,830 B1 12/2002 Wessel 600/300
6,497,845 B1 12/2002 Sacherer 422/104
6,501,404 B2 12/2002 Walker 341/143
6,501,976 B1 12/2002 Sohrab 600/347
6,503,210 B1 1/2003 Hirao 600/576
6,503,231 B1 1/2003 Prausnitz 604/272
6,503,290 B1 1/2003 Jarosinski 75/252
6,503,381 B1 1/2003 Gotoh 204/403.14
6,506,165 B1 1/2003 Sweeney 600/562
6,506,168 B1 1/2003 Fathallah 600/578
6,506,575 B1 1/2003 Knappe 435/25
6,508,795 B1 1/2003 Eppstein 604/113
6,512,986 B1 1/2003 Harmon 702/84
6,514,270 B1 2/2003 Schraga 606/182
6,514,460 B1 2/2003 Fendrock 422/55
6,519,241 B1 2/2003 Theimer 370/338
6,520,326 B2 2/2003 McIvor 206/305
6,521,110 B1 2/2003 Hodges 204/403.14
6,521,182 B1 2/2003 Shartle 422/58
6,527,521 B2 3/2003 Noda 417/355
6,527,716 B1 3/2003 Eppstein 600/309
6,527,778 B2 3/2003 Athanasiou 606/80
6,529,377 B1 3/2003 Nelson 361/699
6,530,892 B1 3/2003 Kelly 600/583
6,530,937 B1 3/2003 Schraga 606/182
6,531,322 B1 3/2003 Jurik 436/95
6,533,949 B1 3/2003 Yeshurun 216/11
6,537,207 B1 3/2003 Rice 600/121
6,537,242 B1 3/2003 Palmer 604/22
6,537,264 B1 3/2003 Cormier et al. 604/506
6,537,292 B1 3/2003 Lee 606/182
6,540,672 B1 4/2003 Simonsen 600/300
6,540,675 B2 4/2003 Aceti 600/309
6,540,762 B1 4/2003 Bertling 606/182
6,540,891 B1 4/2003 Stewart 204/403.14
6,541,266 B2 4/2003 Modzelewski 436/95
6,547,954 B2 4/2003 Ikeda 205/777.5
6,549,796 B2 4/2003 Sohrab 600/345
6,551,494 B1 4/2003 Heller 205/777.5
6,553,244 B2 4/2003 Lesho 600/347
6,554,381 B2 4/2003 Locher 347/7
6,555,061 B1 4/2003 Leong 422/58
D475,136 S 5/2003 Taniguchi D24/165
6,558,320 B1 5/2003 Causey 600/300
6,558,361 B1 5/2003 Yeshurun 604/272
6,558,402 B1 5/2003 Chelak 606/182
6,558,528 B1 5/2003 Matzinger 205/777.5
6,560,471 B1 5/2003 Heller 600/347
6,561,978 B1 5/2003 Conn 600/309
6,561,989 B2 5/2003 Whitson 600/573
6,562,210 B1 5/2003 Bhullar 204/403.3
6,565,509 B1 5/2003 Say 600/365
6,565,808 B2 5/2003 Hudak 422/58
6,569,157 B1 5/2003 Shain 606/12
6,571,651 B1 6/2003 Hodges 73/864.72
6,572,566 B2 6/2003 Effenhauser 600/584
6,572,822 B2 6/2003 Jurik 422/56
6,574,490 B2 6/2003 Abbink 600/316
6,575,905 B2 6/2003 Knobbe 600/365
6,576,101 B1 6/2003 Heller 204/403.14
6,576,117 B1 6/2003 Kazuo 205/777.5
6,576,416 B2 6/2003 Haviland 435/4
6,579,690 B1 6/2003 Bonnecaze et al. 435/14
6,582,573 B2 6/2003 Douglas 204/403.1
6,584,338 B1 6/2003 Van Muiswinkel 600/419
D477,670 S 7/2003 Jurik D24/225
6,586,199 B2 7/2003 Ouyang 435/26
6,587,705 B1 7/2003 Kim 600/347
6,589,260 B1 7/2003 Schmelzeisen-R 606/181
6,589,261 B1 7/2003 Abulhaj 606/181
6,591,124 B2 7/2003 Sherman et al. 600/345
6,591,125 B1 7/2003 Buse 600/347
6,592,744 B1 7/2003 Hodges 205/775
6,592,745 B1 7/2003 Feldman 205/777.5
6,595,919 B2 7/2003 Berner 600/365
6,599,407 B2 7/2003 Taniike 204/403.1
6,599,693 B1 7/2003 Webb 435/4
6,599,769 B2 7/2003 Kondo 438/28
6,601,534 B2 8/2003 Hebrank 119/6.8
6,602,205 B1 8/2003 Erickson 600/573
6,602,268 B2 8/2003 Kuhr 606/181
6,602,678 B2 8/2003 Kwon 435/14
6,604,050 B2 8/2003 Trippel 702/19
6,607,362 B2 8/2003 Lum 417/53
6,607,494 B1 8/2003 Fowler 600/570
6,607,658 B1 8/2003 Heller 205/777.5
6,612,111 B1 9/2003 Hodges 60/593
6,616,616 B2 9/2003 Fritz 600/583
6,616,819 B1 9/2003 Liamos 204/403.02
6,618,934 B1 9/2003 Feldman 29/830
6,620,112 B2 9/2003 Klitmose 600/583
6,620,310 B1 9/2003 Ohara 205/792
6,623,501 B2 9/2003 Heller 606/181
6,626,851 B2 9/2003 Hirao 600/576
6,632,349 B1 10/2003 Hodges 205/792
6,635,222 B2 10/2003 Kent 422/22
6,638,415 B1 10/2003 Hodges 205/775
6,638,772 B1 10/2003 Douglas 436/518
6,641,533 B2 11/2003 Causey 600/300
6,645,142 B2 11/2003 Braig 600/300
6,645,219 B2 11/2003 Roe 606/182
6,645,368 B1 11/2003 Beatty 205/792
6,649,416 B1 11/2003 Kauer 436/164
6,650,915 B2 11/2003 Routt 600/319
6,652,720 B1 11/2003 Mansouri 204/403.11
6,652,734 B1 11/2003 Hodges 205/777.5
6,652,814 B1 11/2003 House 422/104
D484,600 S 12/2003 Kaar D24/169
6,656,697 B1 12/2003 Ouyang 435/7.9
6,656,702 B1 12/2003 Yugawa 435/26
6,659,966 B2 12/2003 Essenpreis 600/583
6,660,018 B2 12/2003 Lum 606/181
6,662,439 B1 12/2003 Bhullar 29/825
6,669,669 B2 12/2003 Flaherty 604/132
6,671,527 B2 12/2003 Peterson 600/316
D484,980 S 1/2004 Hartwein D24/165
6,673,617 B2 1/2004 Patel 436/8
6,676,995 B2 1/2004 Dick 427/286
6,679,841 B2 1/2004 Bojan 600/309
6,679,852 B1 1/2004 Schmelzeisen-R 600/583
6,682,933 B2 1/2004 Patel 436/8

6,689,411 B2 2/2004 Dick 427/2.13
6,706,000 B2 3/2004 Perez 600/583
6,706,049 B2 3/2004 Moerman 606/181
6,706,159 B2 3/2004 Moerman 204/403.03
6,706,232 B2 3/2004 Hasegawa 264/403.09
6,709,692 B2 3/2004 Sudor 427/2.1
6,713,660 B1 3/2004 Roe 604/361
6,716,577 B1 4/2004 Yu 435/6
6,719,887 B2 4/2004 Hasegawa 204/403.09
6,719,923 B2 4/2004 Stiene 252/511
6,721,586 B2 4/2004 Kiser 600/345
6,723,046 B2 4/2004 Lichtenstein 600/300
6,723,111 B2 4/2004 Abulhaj 606/181
6,723,371 B2 4/2004 Chih-hui 472/2.13
6,723,500 B2 4/2004 Yu 435/4
6,726,818 B2 4/2004 Cui et al. 204/403.01
6,729,546 B2 5/2004 Roustaei 235/462.45
6,730,494 B1 5/2004 Toranto 435/28
6,731,966 B1 5/2004 Spigelman 600/407
6,733,493 B2 5/2004 Gruzdev 606/9
6,736,777 B2 5/2004 Kim 600/365
6,738,654 B2 5/2004 Sohrab 600/345
6,740,215 B1 5/2004 Yamamoto 204/403.14
6,743,211 B1 6/2004 PraUSnitz 604/239
6,743,597 B1 6/2004 Guo 435/14
6,743,635 B2 6/2004 Neel 436/95
6,746,872 B2 6/2004 Zheng 436/16
6,749,618 B2 6/2004 Levaughn 606/182
6,749,740 B2 6/2004 Liamos 205/792
6,749,792 B2 6/2004 Olson 264/328.1
6,749,887 B1 6/2004 Dick 427/2.13
6,751,491 B2 6/2004 Lew 600/345
6,752,817 B2 6/2004 Flora 606/181
6,753,187 B2 6/2004 Cizdziel 436/169
6,759,190 B2 7/2004 Lin 435/4
6,764,496 B2 7/2004 Schraga 606/182
6,764,581 B1 7/2004 Forrow 204/403
6,767,441 B1 7/2004 Cai 204/403.03
6,773,671 B1 8/2004 Lewis 422/58
6,776,888 B2 8/2004 Yamamoto 204/403.06
6,780,645 B2 8/2004 Hayter 436/8
6,780,647 B2 8/2004 Fujiwara 436/169
6,783,502 B2 8/2004 Orloff 600/583
6,783,537 B1 8/2004 Kuhr 606/182
6,784,274 B2 8/2004 van Antwerp 528/77
6,786,874 B2 9/2004 Grace 600/573
6,787,013 B2 9/2004 Chang 204/412
6,787,109 B2 9/2004 Haar 422/82.05
6,790,327 B2 9/2004 Ikeda 204/403.1
6,790,599 B1 9/2004 Madou 430/320
6,792,791 B2 9/2004 Sato 73/1.02
6,793,632 B2 9/2004 Sohrab 600/573
6,793,633 B2 9/2004 Douglas 600/583
6,793,802 B2 9/2004 Lee 205/777.5
6,797,150 B2 9/2004 Kermani 205/777.5
6,800,488 B2 10/2004 Khan 436/166
6,801,041 B2 10/2004 Karinka 324/444
6,801,804 B2 10/2004 Miller 604/20
6,802,199 B2 10/2004 Hilgers 72/370.1
6,802,811 B1 10/2004 Slepian 600/309
6,802,957 B2 10/2004 Jung 205/777.5
6,805,780 B1 10/2004 Ryu 204/403.01
6,808,499 B1 10/2004 Churchill 600/587
6,808,908 B2 10/2004 Yao 435/181
6,808,937 B2 10/2004 Ligler 436/518
6,809,807 B1 10/2004 Erickson 356/213
6,811,406 B2 11/2004 Grube 439/66
6,811,557 B2 11/2004 Schraga 606/182
6,811,659 B2 11/2004 Vachon 204/224
6,811,753 B2 11/2004 Hirao 422/101
6,811,792 B2 11/2004 Roser 424/423
6,812,031 B1 11/2004 Carlsson 436/52
6,814,843 B1 11/2004 Bhullar 204/403.01
6,814,844 B2 11/2004 Bhullar 204/403.1
6,814,845 B2 11/2004 Wilson 204/486
6,815,186 B2 11/2004 Clark 435/183
6,816,742 B2 11/2004 Kim 600/345
6,818,180 B2 11/2004 Douglas 422/58
6,821,483 B2 11/2004 Phillips 422/58
6,823,750 B2 11/2004 Hodges 73/864.72
6,825,047 B1 11/2004 Woudenberg 436/518
6,827,250 B2 12/2004 Uhland 228/110.1
6,827,829 B2 12/2004 Kawanaka 204/403.02
6,829,507 B1 12/2004 Lidman 607/19
6,830,551 B1 12/2004 Uchigaki 600/584
6,830,668 B2 12/2004 Musho 204/400
6,830,669 B2 12/2004 Miyazaki 204/409
6,830,934 B1 12/2004 Harding 436/166
6,833,540 B2 12/2004 MacKenzie 250/214
6,835,184 B1 12/2004 Sage 604/46
6,835,553 B2 12/2004 Han 435/14
6,835,570 B2 12/2004 Patel 436/8
6,837,858 B2 1/2005 Cunningham 600/573
6,837,976 B2 1/2005 Cai 204/403.14
6,837,988 B2 1/2005 Leong 205/792
6,840,912 B2 1/2005 Kloepfer 600/583
6,841,052 B2 1/2005 Musho 204/401
6,843,254 B2 1/2005 Tapper 128/898
6,843,902 B1 1/2005 Penner 205/76
6,847,451 B2 1/2005 Pugh 356/436
6,849,052 B2 2/2005 Uchigaki 600/584
6,849,168 B2 2/2005 Crumly 204/416
6,849,216 B2 2/2005 Rappin 264/134
6,849,456 B2 2/2005 Patel 436/8
6,850,790 B2 2/2005 Berner 600/347
6,852,119 B1 2/2005 Abulhaj 606/182
6,852,212 B2 2/2005 Maxwell 205/775
6,852,500 B1 2/2005 Hoss 435/14
6,853,854 B1 2/2005 Proniewicz 600/319
6,855,243 B2 2/2005 Khan 205/777.5
6,856,125 B2 2/2005 Kermani 324/71.1
6,856,928 B2 2/2005 Harmon 702/84
6,858,015 B2 2/2005 List 600/583
6,858,401 B2 2/2005 Phillips 435/14
6,859,738 B2 2/2005 Bush 702/25
6,862,466 B2 3/2005 Ackerman 600/347
6,862,534 B2 3/2005 Sterling 702/23
6,863,800 B2 3/2005 Karinka 205/777.5
6,863,801 B2 3/2005 Hodges 205/792
6,865,408 B1 3/2005 Abbink 600/310
6,866,641 B2 3/2005 Marshall 600/583
6,866,675 B2 3/2005 Perez 606/181
6,866,758 B2 3/2005 Bhullar 204/403.2
6,866,822 B1 3/2005 House 422/82.05
6,869,418 B2 3/2005 Marano-Ford 604/192
6,872,200 B2 3/2005 Mann 604/890.1
6,872,297 B2 3/2005 Mansouri 205/775
6,872,298 B2 3/2005 Kermani 205/777.5
6,872,299 B2 3/2005 Kermani 205/777.5
6,872,358 B2 3/2005 Hagen 422/61
6,875,208 B2 4/2005 Santini 604/890.1
6,875,223 B2 4/2005 Argauer 606/181
6,875,327 B1 4/2005 Miyazaki 204/403.14
6,875,613 B2 4/2005 Shartle 436/63
6,878,120 B2 4/2005 Roe 600/583
6,878,251 B2 4/2005 Hodges 204/403.14
6,878,255 B1 4/2005 Wang 204/452
6,878,262 B2 4/2005 Taniike 205/777.5
6,880,968 B1 4/2005 Haar 374/131
6,881,203 B2 4/2005 Delmore 604/272
6,881,322 B2 4/2005 Tokunaga 205/775
6,881,378 B1 4/2005 Zimmer 422/58
6,881,541 B2 4/2005 Petersen 435/6
6,881,550 B2 4/2005 Phillips 435/14
6,881,551 B2 4/2005 Heller 435/14
6,881,578 B2 4/2005 Otake 436/44
6,882,940 B2 4/2005 Potts 702/23
6,884,592 B2 4/2005 Matzinger 435/7.1
6,885,196 B2 4/2005 Taniike 324/444
6,885,883 B2 4/2005 Parris 600/347
6,887,202 B2 5/2005 Currie 600/309
6,887,239 B2 5/2005 Elstrom 606/41
6,887,253 B2 5/2005 Schraga 606/181
6,887,426 B2 5/2005 Phillips 422/56
6,887,709 B2 5/2005 Leong 436/8
6,889,069 B2 5/2005 Routt 600/319
6,890,319 B1 5/2005 Crocker 604/131
6,890,421 B2 5/2005 Ohara 205/777.5

6,890,484 B2 5/2005 Bautista 422/58
6,891,936 B2 5/2005 Kai 379/106.02
6,892,085 B2 5/2005 McIvor 600/347
6,893,396 B2 5/2005 Schulze 600/300
6,893,545 B2 5/2005 Gotoh 204/403.5
6,893,552 B1 5/2005 Wang 205/777.5
6,895,263 B2 5/2005 Shin 600/316
6,895,264 B2 5/2005 Rice 600/319
6,895,265 B2 5/2005 Silver 600/345
6,896,793 B2 5/2005 Erdosy 205/775
6,897,788 B2 5/2005 Khair 340/870.16
6,902,905 B2 6/2005 Burson 435/14
6,904,301 B2 6/2005 Raskas 600/310
6,905,733 B2 6/2005 Russell 427/393.5
6,908,008 B2 6/2005 Pugh 221/135
6,908,535 B2 6/2005 Rankin 204/406
6,908,591 B2 6/2005 MacPhee 422/22
6,908,593 B1 6/2005 Shartle 422/58
6,911,130 B2 6/2005 Brenneman 204/400
6,911,131 B2 6/2005 Miyazaki 204/403.14
6,911,621 B2 6/2005 Bhullar 219/121.69
6,911,937 B1 6/2005 Sparrow 342/188
6,913,210 B2 7/2005 Baasch 239/407
6,913,668 B2 7/2005 Matzinger 156/256
6,916,410 B2 7/2005 Katsuki 204/403
6,918,874 B1 7/2005 Hatch et al. 600/365
6,918,901 B1 7/2005 Theeuwes 604/500
6,918,918 B1 7/2005 Schraga 606/182
6,922,576 B2 7/2005 Raskas 600/316
6,922,578 B2 7/2005 Eppstein 600/347
6,923,764 B2 8/2005 Aceti 600/309
6,923,894 B2 8/2005 Huang 204/403.06
6,923,936 B2 8/2005 Swanson 422/22
6,924,093 B2 8/2005 Haviland 435/4
6,925,317 B1 8/2005 Samuels 600/344
6,925,393 B1 8/2005 Kalatz 702/27
6,929,631 B1 8/2005 Brugger 604/502
6,929,649 B2 8/2005 Pugh 606/182
6,929,650 B2 8/2005 Fukuzawa 606/182
6,931,327 B2 8/2005 Goode 702/22
6,931,328 B2 8/2005 Braig 702/23
6,939,310 B2 9/2005 Matzinger 600/573
6,939,312 B2 9/2005 Hodges 600/583
6,939,450 B2 9/2005 Karinka 204/409
6,939,685 B2 9/2005 Ouyang 435/26
6,940,591 B2 9/2005 Sopp 356/244
6,942,518 B2 9/2005 Liamos 439/495
6,942,769 B2 9/2005 Cheng 204/400
6,942,770 B2 9/2005 Cai 204/403.04
6,944,486 B2 9/2005 Braig 600/310
6,945,943 B2 9/2005 Pugh 600/584
6,946,067 B2 9/2005 Hodges 205/792
6,946,098 B2 9/2005 Miekka 422/22
6,946,299 B2 9/2005 Neel 436/95
6,949,111 B2 9/2005 Schraga 606/182
6,949,221 B2 9/2005 Kiser 422/56
6,951,631 B1 10/2005 Catt 422/56
6,951,728 B2 10/2005 Qian 435/14
6,952,603 B2 10/2005 Gerber 600/310
6,952,604 B2 10/2005 DeNuzzio 600/345
6,953,693 B2 10/2005 Neel 436/149
6,954,662 B2 10/2005 Freger 600/316
6,958,072 B2 10/2005 Schraga 606/182
6,958,129 B2 10/2005 Galen 422/57
6,958,809 B2 10/2005 Sterling 356/39
6,959,211 B2 10/2005 Rule 600/310
6,959,247 B2 10/2005 Neel 702/19
6,960,287 B2 11/2005 Charlton 205/775
6,960,289 B2 11/2005 Hodges 205/778
6,960,323 B2 11/2005 Guo 422/60
6,964,871 B2 11/2005 Bell 436/95
6,965,791 B1 11/2005 Hitchcock 600/345
6,966,880 B2 11/2005 Boecker 600/583
6,966,977 B2 11/2005 Hasegawa 204/403.07
6,967,105 B2 11/2005 Nomura 436/169
6,968,375 B1 11/2005 Brown 709/224
6,969,359 B2 11/2005 Duchon 600/583
6,969,450 B2 11/2005 Taniike 204/403.01
6,969,451 B2 11/2005 Shin 204/412
6,973,706 B2 12/2005 Say 29/595
6,975,893 B2 12/2005 Say 600/347
6,977,032 B2 12/2005 Hasegawa 204/403.05
6,977,722 B2 12/2005 Wohlstadter et al. 356/246
6,979,544 B2 12/2005 Keen 435/6
6,979,571 B2 12/2005 Modzelewski 436/164
6,982,027 B2 1/2006 Yagi 204/403.06
6,982,431 B2 1/2006 Modlin 250/573
6,983,176 B2 1/2006 Gardner 600/310
6,983,177 B2 1/2006 Rule 600/310
6,984,307 B2 1/2006 Zweig 205/777.5
6,986,777 B2 1/2006 Kim 606/182
6,986,869 B2 1/2006 Tuohy 422/56
6,988,996 B2 1/2006 Roe 600/584
6,989,243 B2 1/2006 Yani 435/14
6,989,891 B2 1/2006 Braig 356/39
6,990,365 B1 1/2006 Parker 600/328
6,990,366 B2 1/2006 Say 600/345
6,990,367 B2 1/2006 Kiser 600/345
6,990,849 B2 1/2006 Bohm 73/53.01
6,991,918 B2 1/2006 Keith 435/31
6,991,940 B2 1/2006 Carroll 436/514
6,994,825 B2 2/2006 Haviland 422/58
6,997,317 B2 2/2006 Catelli 206/438
6,997,343 B2 2/2006 May 221/232
6,997,344 B2 2/2006 Brown 221/258
6,997,936 B2 2/2006 Marshall 606/181
6,998,247 B2 2/2006 Monfre 435/14
6,998,248 B2 2/2006 Yani 435/14
6,999,810 B2 2/2006 Berner 600/345
7,001,343 B2 2/2006 Erickson 600/573
7,001,344 B2 2/2006 Freeman 600/583
7,003,337 B2 2/2006 Harjunmaa 600/316
7,003,340 B2 2/2006 Say 600/345
7,003,341 B2 2/2006 Say 600/345
7,004,928 B2 2/2006 Aceti 604/191
7,005,048 B1 2/2006 Watanabe 204/403.04
7,005,273 B2 2/2006 Heller 435/25
7,005,459 B2 2/2006 Hekal 523/102
7,005,857 B2 2/2006 Stiene 324/449
7,006,857 B2 2/2006 Braig 600/310
7,006,858 B2 2/2006 Silver 600/345
7,008,384 B2 3/2006 Tapper 600/573
7,010,432 B2 3/2006 Kermani 702/19
7,011,630 B2 3/2006 Desai 600/309
7,011,954 B2 3/2006 Ouyang 435/7.9
7,014,615 B2 3/2006 Erickson 600/573
7,015,262 B2 3/2006 Leong 523/205
7,016,713 B2 3/2006 Gardner 600/310
7,018,568 B2 3/2006 Tierney 252/511
7,018,848 B2 3/2006 Douglas 436/524
7,022,217 B2 4/2006 Hodges 205/777.5
7,022,218 B2 4/2006 Taniike 205/777.5
7,022,286 B2 4/2006 Lemke 422/67
7,024,236 B2 4/2006 Ford 600/345
7,024,248 B2 4/2006 Penner 607/60
7,024,399 B2 4/2006 Sumner 706/45
7,025,425 B2 4/2006 Kovatchev 300/365
7,025,774 B2 4/2006 Freeman 606/181
7,027,848 B2 4/2006 Robinson 600/310
7,029,444 B2 4/2006 Shin 600/365
7,033,322 B2 4/2006 Silver 600/486
7,033,371 B2 4/2006 Alden 606/181
7,039,560 B2 5/2006 Kawatahara 702/187
7,041,057 B1 5/2006 Faupel 600/365
7,041,063 B2 5/2006 Abreu 600/549
7,041,068 B2 5/2006 Freeman 600/583
7,041,210 B2 5/2006 Hodges 205/792
7,041,254 B2 5/2006 Haviland 422/58
7,041,468 B2 5/2006 Drucker 435/14
7,043,287 B1 5/2006 Khalil 600/310
7,043,821 B2 5/2006 Hodges 29/594
7,044,911 B2 5/2006 Drinan 600/300
7,045,046 B2 5/2006 Chambers 204/400
7,045,054 B1 5/2006 Buck 205/778
7,045,097 B2 5/2006 Kovacs 422/82.08
7,045,310 B2 5/2006 Buck 435/7.93
7,045,361 B2 5/2006 Heiss 436/172
7,047,070 B2 5/2006 Wilkinson 604/20

7,047,795	B2	5/2006	Sato	73/64.56
7,049,087	B2	5/2006	Jenny	435/13
7,049,130	B2	5/2006	Carroll	435/287.2
7,050,843	B2	5/2006	Shartle	600/345
7,051,495	B2	5/2006	Lang	53/475
7,052,268	B2	5/2006	Powell	425/542
7,052,591	B2	5/2006	Gao	204/490
7,052,652	B2	5/2006	Zanzucchi	422/82.05
7,052,864	B2	5/2006	Durkop	435/25
7,054,682	B2	5/2006	Young	604/20
7,054,759	B2	5/2006	Fukunaga	702/23
D522,656	S	6/2006	Orr	D24/169
D523,555	S	6/2006	Loerwald	D24/146
7,056,425	B2	6/2006	Hasegawa	204/403.04
7,056,495	B2	6/2006	Roser	424/45
7,058,437	B2	6/2006	Buse	600/347
7,059,352	B2	6/2006	Bohm	137/828
7,060,059	B2	6/2006	Keith	604/504
7,060,168	B2	6/2006	Taniike	204/403.04
7,060,192	B2	6/2006	Yuzhakov	216/11
7,061,593	B2	6/2006	Braig	356/39
7,063,234	B2	6/2006	Giraud	221/271
7,063,774	B2	6/2006	Bhullar	204/403.02
7,063,775	B2	6/2006	Yamaoka	204/403.06
7,063,776	B2	6/2006	Huang	204/403.14
7,066,884	B2	6/2006	Custer	600/309
7,066,885	B2	6/2006	Erickson	600/309
7,070,564	B2	7/2006	Matzinger	600/300
7,070,680	B2	7/2006	Bae	204/403.04
7,073,246	B2	7/2006	Bhullar	29/595
7,074,307	B2	7/2006	Simpson	204/403.04
7,074,308	B2	7/2006	Mao	204/403.14
7,077,328	B2	7/2006	Krishnaswamy	235/472.01
7,077,828	B2	7/2006	Kuhr	604/207
7,078,480	B2	7/2006	Nagel	530/322
7,079,252	B1	7/2006	Debreezeny	356/451
7,081,188	B1	7/2006	Cho	204/403.04
7,083,712	B2	8/2006	Morita	205/775
7,086,277	B2	8/2006	Tess	73/53.01
7,087,149	B1	8/2006	Muguruma	205/778
7,090,764	B2	8/2006	Iyengar	205/775
7,096,053	B2	8/2006	Loeb	600/317
7,096,124	B2	8/2006	Sterling	702/23
7,097,631	B2	8/2006	Trautman	604/46
7,098,038	B2	8/2006	Fukuoka	436/164
7,103,578	B2	9/2006	Beck	705/75
7,105,066	B2	9/2006	Schraga	606/182
7,107,253	B1	9/2006	Sumner	706/45
7,108,680	B2	9/2006	Rohr	604/151
7,108,778	B2	9/2006	Simpson	205/778
7,109,271	B2	9/2006	Liu	525/283
7,110,112	B2	9/2006	Uchida	356/364
7,110,803	B2	9/2006	Shults	600/347
7,112,265	B1	9/2006	McAleer	204/403.09
7,112,451	B2	9/2006	Takahashi	436/514
7,113,172	B2	9/2006	Hohl	345/168
7,115,362	B2	10/2006	Douglas	435/4
7,118,351	B2	10/2006	Effenhauser	417/208
7,118,667	B2	10/2006	Lee	205/777.5
7,118,668	B1	10/2006	Edelbrock	205/777.5
7,118,916	B2	10/2006	Matzinger	436/34
7,118,919	B2	10/2006	Yatscoff	436/56
7,120,483	B2	10/2006	Russell	600/345
7,122,102	B2	10/2006	Wogoman	204/400
7,122,110	B2	10/2006	Deng	205/777.5
7,122,111	B2	10/2006	Tokunaga	205/792
7,125,481	B2	10/2006	Musho	205/775
7,129,038	B2	10/2006	Gopalan	435/4
RE39,390	E	11/2006	Hasegawa	204/403.09
D531,725	S	11/2006	Loerwald	D24/146
7,131,342	B2	11/2006	Hodges	73/864.72
7,131,984	B2	11/2006	Sato	606/182
7,132,041	B2	11/2006	Deng	205/777.5
7,133,710	B2	11/2006	Acosta	600/316
7,134,550	B2	11/2006	Groth	206/366
7,134,999	B2	11/2006	Brauker	600/309
7,135,100	B1	11/2006	Lau	204/403.14
7,137,957	B2	11/2006	Erickson	600/573
7,138,041	B2	11/2006	Su	204/403.04
7,138,089	B2	11/2006	Aitken	422/82.01
7,141,034	B2	11/2006	Eppstein	604/22
7,141,058	B2	11/2006	Briggs	606/181
7,144,404	B2	12/2006	Whitson	606/181
7,144,485	B2	12/2006	Hsu	204/403.02
7,144,495	B2	12/2006	Teodorczyk	205/792
7,144,496	B2	12/2006	Meserol	205/792
7,144,709	B2	12/2006	Ouyang	435/7.9
7,147,825	B2	12/2006	Matsuda	422/58
7,150,755	B2	12/2006	Levaughn	606/181
7,150,975	B2	12/2006	Tamada	435/14
7,150,995	B2	12/2006	Xie	436/67
7,153,696	B2	12/2006	Fukuoka	436/164
7,155,371	B2	12/2006	Kawatahara	702/187
7,156,117	B2	1/2007	Bohm	137/14
7,156,810	B2	1/2007	Cho	600/365
7,157,723	B2	1/2007	Colvin	250/458.1
7,160,251	B2	1/2007	Neel	600/365
7,160,313	B2	1/2007	Galloway	606/167
7,160,678	B1	1/2007	Kayyem	435/6
7,162,289	B2	1/2007	Shah	600/345
7,163,616	B2	1/2007	Vreeke	205/777.5
7,166,074	B2	1/2007	Reghabi	600/365
7,166,208	B2	1/2007	Zweig	205/777.5
7,167,734	B2	1/2007	Khalil	600/310
7,167,735	B2	1/2007	Uchida	600/310
7,167,818	B2	1/2007	Brown	703/11
7,169,116	B2	1/2007	Day	600/583
7,169,117	B2	1/2007	Allen	600/584
7,169,289	B2	1/2007	Schulein	205/777.5
7,169,600	B2	1/2007	Hoss	435/287.1
7,172,728	B2	2/2007	Otake	422/58
7,174,799	B2	2/2007	Berner	600/347
7,175,641	B1	2/2007	Schraga	606/181
7,175,642	B2	2/2007	Briggs	606/181
7,179,233	B2	2/2007	Chang	600/584
7,182,910	B2	2/2007	Allen	422/50
7,183,068	B2	2/2007	Burson	435/14
7,183,102	B2	2/2007	Kasai	200/51.09
7,188,034	B2	3/2007	Staib	702/22
7,189,576	B2	3/2007	Fukuoka	436/170
7,190,988	B2	3/2007	Say	600/345
7,192,405	B2	3/2007	DeNuzzio	600/583
7,192,450	B2	3/2007	Brauker	623/23.76
7,195,704	B2	3/2007	Kermani	205/777.5
7,198,606	B2	4/2007	Boecker	600/583
7,199,594	B2	4/2007	Kermani	324/663
7,202,854	B2	4/2007	Hohl	345/168
7,206,620	B2	4/2007	Erickson	600/310
7,206,623	B2	4/2007	Blank	600/344
D542,681	S	5/2007	Young	D10/80
7,211,052	B2	5/2007	Roe	600/584
7,211,096	B2	5/2007	Kuhr	606/182
7,212,925	B2	5/2007	Genshaw	702/23
7,213,720	B2	5/2007	Giraud	220/839
7,215,982	B2	5/2007	Oshima	600/310
7,215,983	B2	5/2007	Cho	600/316
7,223,248	B2	5/2007	Erickson	600/584
7,225,008	B1	5/2007	Ward	600/345
D543,878	S	6/2007	Castillo	D10/81
D545,438	S	6/2007	Huang	D24/186
7,225,535	B2	6/2007	Feldman	29/831
7,226,414	B2	6/2007	Ballerstadt	600/365
7,226,461	B2	6/2007	Boecker	606/181
7,226,978	B2	6/2007	Tapsak	525/296
7,227,156	B2	6/2007	Colvin	250/458.1
7,228,159	B2	6/2007	Petersson	600/316
7,228,162	B2	6/2007	Ward	600/345
7,228,163	B2	6/2007	Ackerman	600/347
7,229,458	B2	6/2007	Freeman	606/181
7,232,451	B2	6/2007	Boecker	606/181
7,232,510	B2	6/2007	Miyazaki	204/403.1
7,233,816	B2	6/2007	Blank	600/310
7,235,056	B2	6/2007	Duchon	600/583
7,235,170	B2	6/2007	Watanabe	205/777.5
7,235,378	B2	6/2007	Yonehara	435/14
7,236,812	B1	6/2007	Ballerstadt	600/316
7,236,814	B2	6/2007	Shioi	600/344
D545,705	S	7/2007	Voege	D10/81

D546,216	S	7/2007	Bolognesi	D10/81
D546,218	S	7/2007	Grasso	D10/81
7,238,192	B2	7/2007	List	606/182
7,238,534	B1	7/2007	Zimmer	436/169
7,241,265	B2	7/2007	Cummings	600/300
7,244,264	B2	7/2007	Roe	606/181
7,244,265	B2	7/2007	Freeman	606/181
7,244,266	B2	7/2007	Garthe	606/181
7,247,138	B2	7/2007	Reghabi	600/365
7,247,144	B2	7/2007	Douglas	600/583
7,250,037	B2	7/2007	Shermer	604/134
7,250,056	B2	7/2007	Hamamoto	606/181
7,250,095	B2	7/2007	Black	204/403.14
7,250,105	B1	7/2007	Davies	205/777.5
7,251,514	B2	7/2007	Cho	600/316
7,251,515	B2	7/2007	Cho	600/316
7,251,516	B2	7/2007	Walker	600/316
7,251,517	B2	7/2007	Cho	600/316
7,251,518	B2	7/2007	Herrmann	600/322
7,251,573	B2	7/2007	Kondoh	600/310
7,252,804	B2	8/2007	Miyashita	422/104
7,254,426	B2	8/2007	Cho	600/316
7,254,427	B2	8/2007	Cho	600/316
7,254,428	B2	8/2007	Cho	600/316
7,254,429	B2	8/2007	Schurman	600/316
7,254,430	B2	8/2007	Cho	600/316
7,254,432	B2	8/2007	Fine	600/335
7,258,673	B2	8/2007	Racchini	600/583
7,258,693	B2	8/2007	Freeman	606/181
7,262,061	B2	8/2007	Petrich	436/169
7,264,139	B2	9/2007	Brickwood	221/270
7,264,627	B2	9/2007	Perez	606/181
7,266,400	B2	9/2007	Fine	600/316
7,267,665	B2	9/2007	Steil	604/131
7,267,750	B2	9/2007	Watanabe	204/403.04
7,270,247	B2	9/2007	Charlton	221/59
7,271,912	B2	9/2007	Sterling	356/436
7,273,484	B2	9/2007	Thoes	606/181
7,276,027	B2	10/2007	Haar	600/309
7,276,029	B2	10/2007	Goode	600/365
7,276,146	B2	10/2007	Wilsey	205/792
7,276,147	B2	10/2007	Wilsey	205/792
7,276,380	B2	10/2007	Fukuyama	436/164
7,277,740	B2	10/2007	Rohleder	600/316
7,278,983	B2	10/2007	Ireland	604/66
7,279,130	B2	10/2007	Brown	422/64
7,282,058	B2	10/2007	Levin	606/181
7,287,318	B2	10/2007	Bhullar	29/825
7,288,073	B2	10/2007	Effenhauser	600/584
7,288,102	B2	10/2007	Griffin	606/182
7,288,174	B2	10/2007	Cui	204/403.14
7,289,836	B2	10/2007	Colvin	600/316
7,291,117	B2	11/2007	Boecker	600/583
7,291,159	B2	11/2007	Schmelzeisen-R	606/181
7,291,256	B2	11/2007	Teodorczyk	205/777.5
7,291,497	B2	11/2007	Holmes	435/287.2
7,294,246	B2	11/2007	Gundel	204/403.14
7,295,867	B2	11/2007	Berner	600/345
7,297,122	B2	11/2007	Boecker	600/583
7,297,151	B2	11/2007	Boecker	606/181
7,297,152	B2	11/2007	Fukuzawa	606/181
7,297,241	B2	11/2007	Kontschieder	204/403.01
7,297,248	B2	11/2007	Bae	205/777.5
7,297,627	B2	11/2007	Shah	438/622
7,299,079	B2	11/2007	Rebec	600/316
7,299,080	B2	11/2007	Acosta	600/316
7,299,081	B2	11/2007	Mace	600/345
7,299,082	B2	11/2007	Feldman	600/347
7,300,402	B2	11/2007	Iliff	600/300
7,301,629	B2	11/2007	Bambot	356/337
7,303,573	B2	12/2007	D'Agostino	606/181
7,303,726	B2	12/2007	McAllister	422/68.1
7,303,922	B2	12/2007	Jeng	436/164
7,305,896	B2	12/2007	Howell	73/864.02
7,306,560	B2	12/2007	Iliff	600/300
7,308,164	B1	12/2007	Banks	385/12
7,308,292	B2	12/2007	Colvin	600/310
7,310,542	B2	12/2007	Jeon	600/344
7,310,543	B2	12/2007	Smart	600/345
7,310,544	B2	12/2007	Brister	600/345
7,311,718	B2	12/2007	Schraga	606/181
7,311,812	B2	12/2007	Forrow	204/403.06
7,312,042	B1	12/2007	Petyt	435/7.1
7,313,425	B2	12/2007	Finarov	600/310
7,314,453	B2	1/2008	Kuo	600/584
7,315,752	B2	1/2008	Kraemer	600/316
7,316,700	B2	1/2008	Alden	606/181
7,316,766	B2	1/2008	Chen	204/403.01
7,316,929	B2	1/2008	Purcell	436/8
7,317,938	B2	1/2008	Lorenz	600/316
7,317,939	B2	1/2008	Fine	600/322
7,320,412	B2	1/2008	Mann	340/870.07
7,322,942	B2	1/2008	Roe	600/583
7,322,996	B2	1/2008	Taylor	606/181
7,322,997	B2	1/2008	Shi	606/181
7,322,998	B2	1/2008	Kuhr	606/182
7,323,098	B2	1/2008	Miyashita	205/777.5
7,323,141	B2	1/2008	Kirchhevel	422/68.1
7,323,315	B2	1/2008	Marfurt	435/7.25
7,328,052	B2	2/2008	Samsoondar	600/310
7,331,931	B2	2/2008	Freeman	600/583
7,335,292	B2	2/2008	Hodges	205/775
7,335,294	B2	2/2008	Heller	205/792
7,337,918	B2	3/2008	Fowler	221/65
7,338,639	B2	3/2008	Burke	422/82.1
7,343,188	B2	3/2008	Sohrab	600/345
7,344,499	B1	3/2008	Prausnitz	600/309
7,344,500	B2	3/2008	Talbot	600/365
7,344,507	B2	3/2008	Briggs	600/583
7,344,626	B2	3/2008	Harding	204/403.01
7,347,925	B2	3/2008	Hsieh	205/777.5
7,347,926	B2	3/2008	Morita	205/792
7,347,973	B2	3/2008	Douglas	422/61
RE40,198	E	4/2008	Buck	205/777.5
7,351,213	B2	4/2008	Wong	600/584
7,351,323	B2	4/2008	Iketaki	205/777.5
7,351,375	B2	4/2008	Noda	422/82.01
7,351,770	B2	4/2008	Liu	525/283
7,357,808	B2	4/2008	Kennedy	606/181
7,357,851	B2	4/2008	Reid	204/403.04
7,361,182	B2	4/2008	Fukuda	606/181
7,361,307	B2	4/2008	Shartle	422/82.01
7,371,247	B2	5/2008	Boecker	606/181
7,372,277	B2	5/2008	Diamond	324/444
7,374,544	B2	5/2008	Freeman	600/583
7,374,546	B2	5/2008	Roe	600/583
7,378,007	B2	5/2008	Moerman	204/403.03
7,378,720	B2	5/2008	Azarnia	435/287.2
7,402,616	B2	7/2008	Rodgers	523/160
7,404,815	B2	7/2008	Kollias	604/501
7,410,468	B2	8/2008	Freeman	600/583
7,429,630	B2	9/2008	Liu	525/283
7,431,814	B2	10/2008	Hodges	204/403.02
7,431,820	B2	10/2008	Hodges	205/777.5
7,438,694	B2	10/2008	Boozer	600/583
D579,652	S	11/2008	Lim	D3/201
D579,653	S	11/2008	Lim	D3/201
7,462,265	B2	12/2008	Leach	204/403.14
7,465,380	B2	12/2008	Rodgers	204/403.14
7,468,125	B2	12/2008	Kraft	205/792
D585,314	S	1/2009	Schvetz	D10/78
7,473,264	B2	1/2009	Allen	606/181
7,474,390	B2	1/2009	Robinson	356/42
7,474,391	B2	1/2009	Baskeyfield	356/42
7,481,776	B2	1/2009	Boecker	600/583
7,481,818	B2	1/2009	Allen	606/181
D586,465	S	2/2009	Faulkner	D24/146
D586,466	S	2/2009	Smith	D24/186
D586,678	S	2/2009	Schvetz	D10/81
D586,916	S	2/2009	Faulkner	D24/146
7,485,128	B2	2/2009	Boecker	606/181
7,491,178	B2	2/2009	Boecker	600/583
7,498,132	B2	3/2009	Yu	435/6
7,501,052	B2	3/2009	Iyengar	205/777.5
7,501,093	B2	3/2009	Demelo	422/58
7,521,019	B2	4/2009	Polak	422/82.06
7,524,293	B2	4/2009	Freeman	600/583
7,537,571	B2	5/2009	Freeman	600/583

7,547,287 B2 6/2009 Boecker 600/583
7,548,772 B2 6/2009 Shartle 600/345
7,553,511 B2 6/2009 Hleong 427/2.28
7,563,232 B2 7/2009 Freeman 600/583
D598,126 S 8/2009 Alvarez-Icaza D24/225
7,572,356 B2 8/2009 Rodgers 204/403.05
7,575,558 B2 8/2009 Boecker 600/573
D600,349 S 9/2009 Bell D24/169
D600,812 S 9/2009 Lei D24/169
D600,813 S 9/2009 Bell D24/169
D601,255 S 9/2009 Schvetz D24/169
D601,258 S 9/2009 Bell D24/169
7,582,063 B2 9/2009 Wurster 600/584
7,582,099 B2 9/2009 Freeman 606/181
7,586,590 B2 9/2009 Baskeyfield 356/42
7,588,670 B2 9/2009 Rodgers 204/403.14
7,589,828 B2 9/2009 Robinson 356/42
7,592,151 B2 9/2009 Liu 435/14
7,593,097 B2 9/2009 Robinson 356/42
7,604,592 B2 10/2009 Freeman 600/309
7,604,722 B2 10/2009 Hodges 204/403.02
7,608,175 B2 10/2009 Hodges 204/403.02
7,618,522 B2 11/2009 Davies 204/403.14
7,648,468 B2 1/2010 Boecker 600/583
7,648,469 B2 1/2010 Boecker 600/583
7,653,492 B2 1/2010 Davies 702/22
7,654,127 B2 2/2010 Krulevitch 73/1.16
7,655,119 B2 2/2010 Davies 204/403.14
7,665,303 B2 2/2010 Bohm 60/643
7,666,287 B2 2/2010 Zhao 204/600
D611,151 S 3/2010 Lei D24/169
D611,372 S 3/2010 Salter D10/81
D611,489 S 3/2010 Bell D14/486
D611,853 S 3/2010 Salter D10/81
D612,274 S 3/2010 Heidemann D10/78
D612,275 S 3/2010 Salter D10/81
D612,279 S 3/2010 Heidemann D10/103
7,674,232 B2 3/2010 Boecker 600/583
7,682,318 B2 3/2010 Alden 600/583
7,713,214 B2 5/2010 Freeman et al. 600/583
2001/0011157 A1 8/2001 Latterell 600/576
2001/0016682 A1 8/2001 Berner 600/345
2001/0017269 A1 8/2001 Heller 205/777.5
2001/0027328 A1 10/2001 Lum 606/186
2001/0031931 A1 10/2001 Cunningham 600/573
2001/0037355 A1 11/2001 Britt 709/201
2001/0042004 A1 11/2001 Taub 705/11
2001/0045355 A1 11/2001 Gephart 204/400
2001/0054319 A1 12/2001 Heller 73/849
2002/0002326 A1 1/2002 Causey 600/300
2002/0002344 A1 1/2002 Douglas 600/583
2002/0004196 A1 1/2002 Whitson 600/573
2002/0016568 A1 2/2002 Lebel 604/131
2002/0016606 A1 2/2002 Moerman 606/181
2002/0016923 A1 2/2002 Knaus 713/200
2002/0019606 A1 2/2002 Lebel 604/66
2002/0019747 A1 2/2002 Ware 705/2
2002/0019748 A1 2/2002 Brown 705/2
2002/0025469 A1 2/2002 Heller 429/43
2002/0029058 A1 3/2002 Levaughn 606/181
2002/0040208 A1 4/2002 Flaherty 604/288.01
2002/0040230 A1 4/2002 Kuhr 606/181
2002/0042090 A1 4/2002 Heller 435/14
2002/0042594 A1 4/2002 Lum 604/117
2002/0044890 A1 4/2002 Black 422/56
2002/0052618 A1 5/2002 Haar 606/181
2002/0053523 A1 5/2002 Liamos 205/787
2002/0057993 A1 5/2002 Maisey 422/82.01
2002/0058902 A1 5/2002 Kollias et al. 604/20
2002/0076349 A1 6/2002 Aitken 422/58
2002/0078091 A1 6/2002 Vu 707/513
2002/0081559 A1 6/2002 Brown ..... 434/307 R
2002/0081588 A1 6/2002 Lumley-Woodyear 435/6
2002/0082543 A1 6/2002 Park 604/21
2002/0084196 A1 7/2002 Liamos 205/792
2002/0087056 A1 7/2002 Aceti
2002/0092612 A1 7/2002 Davies 156/292
2002/0099308 A1 7/2002 Bojan 600/573
2002/0103499 A1 8/2002 Perez 606/182
2002/0120216 A1 8/2002 Fritz 600/583
2002/0120261 A1 8/2002 Morris 606/41
2002/0123335 A1 9/2002 Luna 455/419
2002/0130042 A1 9/2002 Moerman et al. 204/403.01
2002/0133377 A1 9/2002 Brown 705/3
2002/0136667 A1 9/2002 Subramanian 422/100
2002/0136863 A1 9/2002 Subramanian 428/156
2002/0137998 A1 9/2002 Smart 600/347
2002/0138040 A1 9/2002 Flora 604/116
2002/0148739 A2 10/2002 Liamos 205/787
2002/0156355 A1 10/2002 Gough 600/345
2002/0160520 A1 10/2002 Orloff 436/72
2002/0161289 A1 10/2002 Hopkins 600/322
2002/0168290 A1 11/2002 Yuzhakov 422/56
2002/0169393 A1 11/2002 Cunningham 600/573
2002/0169394 A1 11/2002 Eppstein 600/573
2002/0176984 A1 11/2002 Smart 428/336
2002/0177761 A1 11/2002 Orloff 600/309
2002/0177763 A1 11/2002 Burns 600/345
2002/0188224 A1 12/2002 Roe 600/584
2003/0014010 A1 1/2003 Carpenter 604/117
2003/0018282 A1 1/2003 Effenhauser 600/583
2003/0018300 A1 1/2003 Duchon 604/164.01
2003/0028125 A1 2/2003 Yuzhakov
2003/0028126 A1 2/2003 List 600/583
2003/0032077 A1 2/2003 Itoh 435/14
2003/0038047 A1 2/2003 Sleva 206/370
2003/0050537 A1 3/2003 Wessel 600/300
2003/0050573 A1 3/2003 Kuhr 600/567
2003/0050656 A1 3/2003 Schraga 606/182
2003/0057391 A1 3/2003 Krulevitch 251/11
2003/0060730 A1 3/2003 Perez 600/576
2003/0069509 A1 4/2003 Matzinger et al. 600/504
2003/0069753 A1 4/2003 Brown 705/2
2003/0072647 A1 4/2003 Lum 415/1
2003/0073089 A1 4/2003 Mauze 435/6
2003/0073229 A1 4/2003 Greenstein 435/287.2
2003/0073931 A1 4/2003 Boecker 600/573
2003/0083685 A1 5/2003 Freeman 606/181
2003/0083686 A1 5/2003 Freeman 606/181
2003/0088160 A1 5/2003 Halleck 600/300
2003/0088191 A1 5/2003 Freeman et al. 600/583
2003/0089730 A1 5/2003 May 221/232
2003/0093010 A1 5/2003 Essenpreis 600/583
2003/0100040 A1 5/2003 Bonnecaze 435/14
2003/0106810 A1 6/2003 Douglas 205/777.5
2003/0109777 A1 6/2003 Kloepfer 600/367
2003/0109860 A1 6/2003 Black 606/10
2003/0111357 A1 6/2003 Black 205/775
2003/0113827 A1 6/2003 Burkoth 435/14
2003/0116447 A1 6/2003 Sturridge 205/777.5
2003/0120297 A1 6/2003 Beyerlein 606/185
2003/0135333 A1 7/2003 Aceti 702/31
2003/0136189 A1 7/2003 Lauman ..... 73/304 C
2003/0139653 A1 7/2003 Manser 600/300
2003/0143113 A2 7/2003 Yuzhakov 422/56
2003/0144608 A1 7/2003 Kojima 600/583
2003/0144609 A1 7/2003 Kennedy 600/583
2003/0146110 A1 8/2003 Karinka 205/777.5
2003/0149348 A1 8/2003 Raskas 600/310
2003/0149377 A1 8/2003 Erickson 600/573
2003/0153900 A1 8/2003 Aceti 604/890.1
2003/0159944 A1 8/2003 Pottgen 205/777.5
2003/0163351 A1 8/2003 Brown 705/2
2003/0178322 A1 9/2003 Iyengar 205/775
2003/0191376 A1 10/2003 Samuels 600/309
2003/0191415 A1 10/2003 Moerman 600/584
2003/0195435 A1 10/2003 Williams 600/583
2003/0195540 A1 10/2003 Moerman 606/181
2003/0199744 A1 10/2003 Buse 600/347
2003/0199789 A1 10/2003 Boecker 600/575
2003/0199790 A1 10/2003 Boecker 600/576
2003/0199791 A1 10/2003 Boecker 600/576
2003/0199891 A1 10/2003 Argauer 606/181
2003/0199893 A1 10/2003 Boecker 606/181
2003/0199894 A1 10/2003 Boecker 606/181
2003/0199895 A1 10/2003 Boecker 606/181
2003/0199896 A1 10/2003 Boecker 606/181
2003/0199897 A1 10/2003 Boecker 606/181

2003/0199898 A1 10/2003 Boecker 606/181
2003/0199899 A1 10/2003 Boecker 606/181
2003/0199900 A1 10/2003 Boecker 606/181
2003/0199901 A1 10/2003 Boecker 606/181
2003/0199902 A1 10/2003 Boecker 606/181
2003/0199903 A1 10/2003 Boecker 606/181
2003/0199904 A1 10/2003 Boecker 606/181
2003/0199905 A1 10/2003 Boecker 606/181
2003/0199906 A1 10/2003 Boecker 606/181
2003/0199907 A1 10/2003 Boecker 606/181
2003/0199908 A1 10/2003 Boecker 606/181
2003/0199909 A1 10/2003 Boecker 606/181
2003/0199910 A1 10/2003 Boecker 606/181
2003/0199911 A1 10/2003 Boecker 606/181
2003/0199912 A1 10/2003 Pugh 606/182
2003/0201194 A1 10/2003 Heller 205/777.5
2003/0203352 A1 10/2003 Haviland 435/4
2003/0206828 A1 11/2003 Bell 422/44
2003/0208140 A1 11/2003 Pugh 600/584
2003/0210811 A1 11/2003 Dubowsky 382/128
2003/0212344 A1 11/2003 Yuzhakov 600/583
2003/0212345 A1 11/2003 McAllister 600/584
2003/0212346 A1 11/2003 McAllister 600/584
2003/0212347 A1 11/2003 Sohrab 600/584
2003/0212379 A1 11/2003 Bylund 604/504
2003/0212423 A1 11/2003 Pugh 606/181
2003/0212424 A1 11/2003 Briggs 606/181
2003/0212579 A1 11/2003 Brown 705/2
2003/0216767 A1 11/2003 List 606/181
2003/0217918 A1 11/2003 Davies 204/403.14
2003/0220552 A1 11/2003 Reghabi 600/365
2003/0220663 A1 11/2003 Fletcher 606/182
2003/0223906 A1 12/2003 McAllister 422/58
2003/0225317 A1 12/2003 Schell 600/300
2003/0225429 A1 12/2003 Garthe 606/182
2003/0225430 A1 12/2003 Schraga 606/182
2003/0228637 A1 12/2003 Wang 435/7.9
2003/0229514 A2 12/2003 Brown 705/2
2003/0232370 A1 12/2003 Trifiro 435/6
2003/0233055 A1 12/2003 Erickson 600/573
2003/0233112 A1 12/2003 Alden et al. 606/181
2003/0233113 A1 12/2003 Alden et al. 606/182
2004/0006285 A1 1/2004 Douglas 600/583
2004/0007585 A1 1/2004 Griffith 221/232
2004/0009100 A1 1/2004 Simons 422/102
2004/0010279 A1 1/2004 Freeman 606/182
2004/0015064 A1 1/2004 Parsons 600/347
2004/0019250 A1 1/2004 Catelli 600/1
2004/0019259 A1 1/2004 Brown 600/300
2004/0023858 A1 2/2004 Forrow 204/403
2004/0026243 A1 2/2004 Davies 204/403.14
2004/0026244 A1 2/2004 Hodges 204/409
2004/0030353 A1 2/2004 Schmelzeisen 606/201
2004/0031682 A1 2/2004 Wilsey 204/403.1
2004/0034318 A1 2/2004 Fritz 604/19
2004/0038045 A1 2/2004 Smart 428/446
2004/0039303 A1 2/2004 Wurster 600/584
2004/0039342 A1 2/2004 Eppstein 604/200
2004/0039407 A1 2/2004 Schraga 606/181
2004/0039408 A1 2/2004 Abulhaj 606/181
2004/0049219 A1 3/2004 Briggs 606/181
2004/0049220 A1 3/2004 Boecker 606/181
2004/0050694 A1 3/2004 Yang 204/403.02
2004/0054267 A1 3/2004 Feldman 600/316
2004/0054898 A1 3/2004 Heller 205/777.5
2004/0059256 A1 3/2004 Perez 600/583
2004/0060818 A1 4/2004 Feldman 204/403.01
2004/0061841 A1 4/2004 Black 355/30
2004/0064068 A1 4/2004 DeNuzzio 600/583
2004/0069657 A1 4/2004 Hodges 205/787
2004/0087990 A1 5/2004 Boecker 606/181
2004/0092842 A1 5/2004 Boecker 600/575
2004/0092994 A1 5/2004 Briggs 606/181
2004/0092995 A1 5/2004 Boecker 606/181
2004/0096991 A1 5/2004 Zhang 436/518
2004/0098009 A1 5/2004 Boecker 606/181
2004/0098010 A1 5/2004 Davison 606/181
2004/0102803 A1 5/2004 Boecker 606/183
2004/0106855 A1 6/2004 Brown 600/301
2004/0106858 A1 6/2004 Say 600/345
2004/0106859 A1 6/2004 Say 600/345
2004/0106860 A1 6/2004 Say 600/345
2004/0106904 A1 6/2004 Gonnelli 604/173
2004/0106941 A1 6/2004 Roe 606/181
2004/0107116 A1 6/2004 Brown 705/2
2004/0115754 A1 6/2004 Chang 435/14
2004/0115831 A1 6/2004 Meathrel 436/514
2004/0116780 A1 6/2004 Brown 600/300
2004/0116829 A1 6/2004 Raney 600/573
2004/0117207 A1 6/2004 Brown 705/2
2004/0117208 A1 6/2004 Brown 705/2
2004/0117209 A1 6/2004 Brown 705/2
2004/0117210 A1 6/2004 Brown 705/2
2004/0122339 A1 6/2004 Roe
2004/0127818 A1 7/2004 Roe 600/583
2004/0127819 A1 7/2004 Roe 600/583
2004/0127928 A1 7/2004 Whitson 606/181
2004/0127929 A1 7/2004 Roe 606/181
2004/0132167 A1 7/2004 Rule 435/287.1
2004/0133125 A1 7/2004 Miyashita 600/573
2004/0133127 A1 7/2004 Roe 600/583
2004/0137640 A1 7/2004 Hirao 436/514
2004/0138541 A1 7/2004 Ward 600/345
2004/0138588 A1 7/2004 Saikley 600/583
2004/0138688 A1 7/2004 Giraud 606/181
2004/0146958 A1 7/2004 Bae 435/14
2004/0154932 A1 8/2004 Deng 205/777.5
2004/0157017 A1 8/2004 Mauze 428/35.7
2004/0157149 A1 8/2004 Hofmann 430/131
2004/0157319 A1 8/2004 Keen 435/287.2
2004/0157338 A1 8/2004 Burke 436/147
2004/0157339 A1 8/2004 Burke 436/149
2004/0158137 A1 8/2004 Eppstein 600/347
2004/0158271 A1 8/2004 Hamamoto 606/181
2004/0161737 A1 8/2004 Yang 435/5
2004/0162473 A1 8/2004 Sohrab 600/345
2004/0162474 A1 8/2004 Kiser 600/345
2004/0162506 A1 8/2004 Duchon 600/583
2004/0162573 A1 8/2004 Kheiri 606/182
2004/0167383 A1 8/2004 Kim 600/365
2004/0171057 A1 9/2004 Yang 435/6
2004/0171968 A1 9/2004 Katsuki 600/583
2004/0172000 A1 9/2004 Roe 604/361
2004/0173472 A1 9/2004 Jung 205/777.5
2004/0173488 A1 9/2004 Griffin 206/363
2004/0176705 A1 9/2004 Stevens 600/584
2004/0176732 A1 9/2004 Frazier 604/345
2004/0178066 A1 9/2004 Miyazaki 204/403.01
2004/0178067 A1 9/2004 Miyazaki 204/403.1
2004/0178216 A1 9/2004 Brickwood 221/268
2004/0180379 A1 9/2004 van Duyne 435/7.1
2004/0182703 A1 9/2004 Bell 204/403.11
2004/0185568 A1 9/2004 Matsumoto 436/8
2004/0186359 A1 9/2004 Beaudoin 600/310
2004/0186394 A1 9/2004 Roe 600/598
2004/0186500 A1 9/2004 Koike 606/181
2004/0193201 A1 9/2004 Kim 606/181
2004/0193377 A1 9/2004 Brown 702/19
2004/0194302 A1 10/2004 Bhullar 29/847
2004/0197231 A1 10/2004 Katsuki 422/68.1
2004/0197821 A1 10/2004 Bauer 437/7.1
2004/0199062 A1 10/2004 Petersson 600/316
2004/0199409 A1 10/2004 Brown 705/3
2004/0200720 A1 10/2004 Musho 204/403.01
2004/0200721 A1 10/2004 Bhullar 204/403.01
2004/0202576 A1 10/2004 Aceti 422/82.05
2004/0204662 A1 10/2004 Perez 600/583
2004/0206625 A1 10/2004 Bhullar 204/403.1
2004/0206636 A1 10/2004 Hodges 205/792
2004/0206658 A1 10/2004 Hammerstedt 206/524.1
2004/0209307 A1 10/2004 Valkirs 435/7.1
2004/0209350 A1 10/2004 Sakata 435/287.1
2004/0209354 A1 10/2004 Mathies 435/287.2
2004/0210279 A1 10/2004 Gruzdev 607/89
2004/0211666 A1 10/2004 Pamidi 204/403.01
2004/0214253 A1 10/2004 Paek 435/7.92
2004/0215224 A1 10/2004 Sakata 606/181
2004/0215225 A1 10/2004 Nakayama 606/182

2004/0216516 A1 11/2004 Sato 73/64.56
2004/0217019 A1 11/2004 Cai 205/792
2004/0219500 A1 11/2004 Brown ..... 434/307 R
2004/0219535 A1 11/2004 Bell 435/6
2004/0220456 A1 11/2004 Eppstein 600/309
2004/0220495 A1 11/2004 Cahir 600/562
2004/0220564 A1 11/2004 Ho 606/47
2004/0220603 A1 11/2004 Rutynowski 606/181
2004/0222092 A1 11/2004 Musho 204/401
2004/0224369 A1 11/2004 Cai 435/7.7
2004/0225230 A1 11/2004 Liamos 600/583
2004/0225311 A1 11/2004 Levaughn 606/181
2004/0225312 A1 11/2004 Orloff 606/182
2004/0230216 A1 11/2004 Levaughn 606/181
2004/0231983 A1 11/2004 Shen 204/403.01
2004/0231984 A1 11/2004 Lauks 204/416
2004/0232009 A1 11/2004 Okuda 205/789
2004/0236250 A1 11/2004 Hodges 600/583
2004/0236251 A1 11/2004 Roe 600/583
2004/0236268 A1 11/2004 Mitragotri 604/20
2004/0236362 A1 11/2004 Shraga 606/181
2004/0238357 A1 12/2004 Bhullar 204/400
2004/0238358 A1 12/2004 Forrow 204/403.01
2004/0238359 A1 12/2004 Ikeda 204/403.1
2004/0241746 A1 12/2004 Adlassnig 435/7.1
2004/0242977 A1 12/2004 Dosmann 600/315
2004/0243164 A1 12/2004 D'Agostino 606/181
2004/0243165 A1 12/2004 Koike 606/181
2004/0245101 A1 12/2004 Willner 204/403
2004/0248282 A1 12/2004 Sobha 435/287.2
2004/0248312 A1 12/2004 Vreeke 436/95
2004/0249254 A1 12/2004 Racchini 600/347
2004/0249310 A1 12/2004 Shartle 600/583
2004/0249311 A1 12/2004 Haar 600/584
2004/0249405 A1 12/2004 Watanabe 606/181
2004/0249406 A1 12/2004 Griffin 606/182
2004/0251131 A1 12/2004 Ueno 204/403
2004/0253634 A1 12/2004 Wang 435/7.1
2004/0254434 A1 12/2004 Goodnow 600/365
2004/0254599 A1 12/2004 Lipoma 606/181
2004/0256228 A1 12/2004 Huang 204/434
2004/0256248 A1 12/2004 Burke 205/792
2004/0256685 A1 12/2004 Chou 257/414
2004/0258564 A1 12/2004 Charlton 422/58
2004/0260204 A1 12/2004 Boecker 600/584
2004/0260324 A1 12/2004 Fukuzawa 606/181
2004/0260325 A1 12/2004 Kuhr 606/181
2004/0260326 A1 12/2004 Lipoma 606/182
2004/0260511 A1 12/2004 Burke 702/182
2004/0267105 A1 12/2004 Monfre 600/344
2004/0267160 A9 12/2004 Perez 600/583
2004/0267229 A1 12/2004 Moerman 604/500
2004/0267299 A1 12/2004 Kuriger 606/181
2004/0267300 A1 12/2004 Mace 606/182
2005/0000806 A1 1/2005 Hsieh 203/403.1
2005/0000807 A1 1/2005 Wang 204/403.81
2005/0000808 A1 1/2005 Cui 203/403.14
2005/0003470 A1 1/2005 Nelson 435/14
2005/0004437 A1 1/2005 Kaufmann 600/300
2005/0004494 A1 1/2005 Perez 600/583
2005/0008537 A1 1/2005 Mosolu 422/56
2005/0008851 A1 1/2005 Ezoe 428/336
2005/0009191 A1 1/2005 Swenson 436/43
2005/0010090 A1 1/2005 Acosta 600/316
2005/0010093 A1 1/2005 Ford 600/345
2005/0010134 A1 1/2005 Douglas 600/573
2005/0010137 A1 1/2005 Hodges 600/583
2005/0010198 A1 1/2005 Marchitto 606/9
2005/0011759 A1 1/2005 Moerman 204/403.03
2005/0013731 A1 1/2005 Burke 422/56
2005/0014997 A1 1/2005 Ruchti 600/310
2005/0015020 A1 1/2005 Levaughn 600/583
2005/0016844 A1 1/2005 Burke 204/403.1
2005/0019212 A1 1/2005 Bhullar 422/56
2005/0019219 A1 1/2005 Oshiman 422/82.12
2005/0019805 A1 1/2005 Groll 435/6
2005/0019945 A1 1/2005 Groll 436/169
2005/0019953 A1 1/2005 Groll 436/514
2005/0021066 A1 1/2005 Kuhr 606/181
2005/0027181 A1 2/2005 Goode, Jr. 600/365
2005/0027211 A1 2/2005 Kuhr 600/583
2005/0027562 A1 2/2005 Brown 705/2
2005/0033340 A1 2/2005 Lipoma 606/181
2005/0033341 A1 2/2005 Vreeke 606/181
2005/0034983 A1 2/2005 Chambers 204/403.01
2005/0036020 A1 2/2005 Li 347/100
2005/0036146 A1 2/2005 Braig 356/246
2005/0036906 A1 2/2005 Katsuji 422/58
2005/0036909 A1 2/2005 Erickson 422/61
2005/0037482 A1 2/2005 Braig 435/287
2005/0038329 A1 2/2005 Morris 600/319
2005/0038330 A1 2/2005 Jansen 600/345
2005/0038463 A1 2/2005 Davar 606/181
2005/0038464 A1 2/2005 Shraga 606/182
2005/0038465 A1 2/2005 Shraga 606/182
2005/0038674 A1 2/2005 Braig 705/2
2005/0042766 A1 2/2005 Ohman 436/174
2005/0043894 A1 2/2005 Fernandez 702/19
2005/0043965 A1 2/2005 Heller 705/2
2005/0045476 A1 3/2005 Neel 204/403.2
2005/0049472 A1 3/2005 Manda 600/345
2005/0049473 A1 3/2005 Desai 600/347
2005/0050859 A1 3/2005 Coppeta 53/471
2005/0054082 A1 3/2005 Pachl 435/287.2
2005/0054908 A1 3/2005 Blank 600/316
2005/0059872 A1 3/2005 Shartle 600/347
2005/0059895 A1 3/2005 Brown 600/481
2005/0060194 A1 3/2005 Brown 705/2
2005/0061668 A1 3/2005 Brenneman 204/403.01
2005/0064528 A1 3/2005 Kwon 435/14
2005/0067280 A1 3/2005 Reid 204/403.14
2005/0067737 A1 3/2005 Rappin 264/272.19
2005/0070771 A1 3/2005 Rule 600/316
2005/0070819 A1 3/2005 Poux 600/576
2005/0070945 A1 3/2005 Schraga 606/182
2005/0072670 A1 4/2005 Hasegawa 204/403.01
2005/0077176 A1 4/2005 Hodges 204/403.01
2005/0077584 A1 4/2005 Uhland 257/414
2005/0079542 A1 4/2005 Cullen 435/7.1
2005/0080652 A1 4/2005 Brown 705/2
2005/0085839 A1 4/2005 Allen 606/181
2005/0085840 A1 4/2005 Yi 606/182
2005/0086083 A1 4/2005 Brown 705/2
2005/0090754 A1 4/2005 Wolf 600/509
2005/0090850 A1 4/2005 Toes 606/182
2005/0096520 A1 5/2005 Maekawa 600/365
2005/0096565 A1 5/2005 Chang 600/584
2005/0096586 A1 5/2005 Trautman 604/46
2005/0096587 A1 5/2005 Santini 604/66
2005/0096686 A1 5/2005 Allen 606/181
2005/0098431 A1 5/2005 Hodges 204/403.01
2005/0098432 A1 5/2005 Gundel 204/403.2
2005/0098433 A1 5/2005 Gundel 204/403.2
2005/0098434 A1 5/2005 Gundel 204/403.02
2005/0100880 A1 5/2005 Chang 435/4
2005/0101841 A9 5/2005 Kaylor 600/300
2005/0101979 A1 5/2005 Alden 606/181
2005/0101980 A1 5/2005 Alden 606/181
2005/0101981 A1 5/2005 Alden 606/181
2005/0103624 A1 5/2005 Bhullar 204/403.01
2005/0106713 A1 5/2005 Phan 435/287.2
2005/0109637 A1 5/2005 Iyengar 205/775
2005/0112712 A1 5/2005 Ouyang 435/14
2005/0112782 A1 5/2005 Buechler 436/518
2005/0113658 A1 5/2005 Jacobson 600/342
2005/0113717 A1 5/2005 Matzinger 600/573
2005/0114062 A1 5/2005 Davies 702/104
2005/0114154 A1 5/2005 Wolkowicz 705/1
2005/0114444 A1 5/2005 Brown 709/203
2005/0118056 A1 6/2005 Swanson 423/23
2005/0118062 A1 6/2005 Otake 422/68.1
2005/0119681 A1 6/2005 Marshall 606/181
2005/0123443 A1 6/2005 Fujiwara 422/58
2005/0123680 A1 6/2005 Kang 427/248.1
2005/0124869 A1 6/2005 Hefti 600/316
2005/0125017 A1 6/2005 Kudrna 606/181
2005/0125018 A1 6/2005 Galloway 606/181
2005/0125019 A1 6/2005 Kudrna 606/182

2005/0126929 A1 6/2005 Mansouri 205/778
2005/0130248 A1 6/2005 Willner 435/14
2005/0130249 A1 6/2005 Parris 435/14
2005/0130292 A1 6/2005 Ahn 435/287.1
2005/0131286 A1 6/2005 Parker 600/328
2005/0131441 A1 6/2005 Iio 606/182
2005/0133368 A1 6/2005 Davies 204/403.01
2005/0136471 A1 6/2005 Bhullar 435/6
2005/0136501 A1 6/2005 Kuriger 435/14
2005/0136529 A1 6/2005 Yang 435/287
2005/0136550 A1 6/2005 Yang 436/514
2005/0137531 A1 6/2005 Gonnelli 604/173
2005/0137536 A1 6/2005 Gonnelli 604/264
2005/0140659 A1 6/2005 Hohl 345/169
2005/0143675 A1 6/2005 Neel 600/583
2005/0143713 A1 6/2005 Delmore 604/506
2005/0143771 A1 6/2005 Stout 606/181
2005/0145490 A1 7/2005 Shinno 204/403
2005/0145491 A1 7/2005 Amano 204/403
2005/0145520 A1 7/2005 Ilo 206/365
2005/0149088 A1 7/2005 Fukuda 606/181
2005/0149089 A1 7/2005 Trissel 606/181
2005/0149090 A1 7/2005 Susumu 606/181
2005/0150762 A1 7/2005 Butters 204/403
2005/0150763 A1 7/2005 Butters 204/403
2005/0154277 A1 7/2005 Tang 600/407
2005/0154374 A1 7/2005 Hunter 604/890
2005/0154410 A1 7/2005 Conway 606/181
2005/0154616 A1 7/2005 Iliff 705/3
2005/0158850 A1 7/2005 Kubo 435/287.2
2005/0159656 A1 7/2005 Hockersmith 600/315
2005/0159768 A1 7/2005 Boehm 606/182
2005/0164322 A1 7/2005 Heller 435/14
2005/0164329 A1 7/2005 Wallace-Davis 435/25
2005/0165285 A1 7/2005 Iliff 600/300
2005/0165393 A1 7/2005 Eppstein 606/41
2005/0165622 A1 7/2005 Neel 705/2
2005/0169810 A1 8/2005 Hagen 422/102
2005/0169961 A1 8/2005 Hunter 424/423
2005/0170448 A1 8/2005 Burson 435/14
2005/0171567 A1 8/2005 DeHart 606/181
2005/0172021 A1 8/2005 Brown 709/224
2005/0172022 A1 8/2005 Brown 709/224
2005/0173245 A1 8/2005 Feldman 204/403.01
2005/0173246 A1 8/2005 Hodges 204/403.11
2005/0175509 A1 8/2005 Nakaminami 422/82.03
2005/0176084 A1 8/2005 Burkoth 435/14
2005/0176133 A1 8/2005 Miyashita 435/287.1
2005/0176153 A1 8/2005 O'hara 436/70
2005/0177071 A1 8/2005 Nakayama 600/583
2005/0177201 A1 8/2005 Freeman 607/46
2005/0177398 A1 8/2005 Watanabe 705/3
2005/0178218 A1 8/2005 Montagu 73/864.34
2005/0181010 A1 8/2005 Hunter 424/423
2005/0181497 A1 8/2005 Salto 435/287.1
2005/0182307 A1 8/2005 Currie 600/300
2005/0187439 A1 8/2005 Blank 600/310
2005/0187444 A1 8/2005 Hubner 600/322
2005/0192488 A1 9/2005 Bryenton 600/301
2005/0196821 A1 9/2005 Monfre 435/14
2005/0197666 A1 9/2005 Raney 606/181
2005/0201897 A1 9/2005 Zimmer 422/82.05
2005/0202567 A1 9/2005 Zanzucchi 436/95
2005/0203358 A1 9/2005 Monfre 600/331
2005/0203364 A1 9/2005 Monfre 600/365
2005/0204939 A1 9/2005 Krejci 101/129
2005/0205136 A1 9/2005 Freeman 137/554
2005/0205422 A1 9/2005 Moser 204/403.06
2005/0205816 A1 9/2005 Hayenga 251/61.1
2005/0209515 A1 9/2005 Hockersmith 600/316
2005/0209564 A1 9/2005 Bonner 604/173
2005/0209625 A1 9/2005 Chan 606/181
2005/0211571 A1 9/2005 Schulein 205/777.5
2005/0211572 A1 9/2005 Buck 205/778
2005/0214881 A1 9/2005 Azarnia 435/7.92
2005/0214892 A1 9/2005 Kovatchev 435/25
2005/0215871 A1 9/2005 Feldman 600/309
2005/0215872 A1 9/2005 Berner 600/347
2005/0215923 A1 9/2005 Wiegel 600/573
2005/0215925 A1 9/2005 Chan 600/583
2005/0216046 A1 9/2005 Yeoh 606/181
2005/0218024 A1 10/2005 Lang 206/438
2005/0221276 A1 10/2005 Rozakis 435/4
2005/0221470 A1 10/2005 Matsumoto 435/287.1
2005/0222599 A1 10/2005 Czernecki 606/182
2005/0227372 A1 10/2005 Khan 436/514
2005/0228242 A1 10/2005 Kawamura 600/300
2005/0228883 A1 10/2005 Brown 709/224
2005/0230252 A1 10/2005 Tsai 204/450
2005/0230253 A1 10/2005 Marquant 204/451
2005/0232813 A1 10/2005 Karmali 422/58
2005/0232815 A1 10/2005 Ruhl 422/66
2005/0234368 A1 10/2005 Wong 600/583
2005/0234486 A1 10/2005 Allen 606/181
2005/0234487 A1 10/2005 Shi 600/181
2005/0234488 A1 10/2005 Allen 606/181
2005/0234489 A1 10/2005 Allen 606/181
2005/0234490 A1 10/2005 Allen 606/181
2005/0234491 A1 10/2005 Allen 606/181
2005/0234492 A1 10/2005 Tsai 606/181
2005/0234494 A1 10/2005 Conway 606/181
2005/0234495 A1 10/2005 Schraga 606/181
2005/0235060 A1 10/2005 Brown 709/224
2005/0239154 A1 10/2005 Feldman 435/14
2005/0239156 A1 10/2005 Drucker 435/14
2005/0239194 A1 10/2005 Takahashi 435/287.2
2005/0240090 A1 10/2005 Ruchti 600/316
2005/0240119 A1 10/2005 Draudt 600/583
2005/0240207 A1 10/2005 Marshall 606/181
2005/0240778 A1 10/2005 Saito 713/186
2005/0245798 A1 11/2005 Yamaguchi 600/345
2005/0245843 A1 11/2005 Day 600/583
2005/0245844 A1 11/2005 Mace 600/583
2005/0245845 A1 11/2005 Roe 600/583
2005/0245846 A1 11/2005 Day 600/583
2005/0245954 A1 11/2005 Roe 606/181
2005/0245955 A1 11/2005 Schraga 606/181
2005/0256534 A1 11/2005 Alden 606/182
2005/0258035 A1 11/2005 Harding 204/403.01
2005/0258036 A1 11/2005 Harding 204/403.01
2005/0258050 A1 11/2005 Harding 205/775
2005/0265094 A1 12/2005 Harding 365/203
2005/0276133 A1 12/2005 Harding 365/203
2005/0278945 A1 12/2005 Feldman 29/830
2005/0279631 A1 12/2005 Celentano 204/403.01
2005/0279647 A1 12/2005 Beaty 205/792
2005/0283094 A1 12/2005 Thym 600/583
2005/0284110 A1 12/2005 Lang 53/473
2005/0284757 A1 12/2005 Allen 204/400
2005/0287620 A1 12/2005 Heller 435/14
2005/0288637 A1 12/2005 Kuhr 604/204
2005/0288698 A1 12/2005 Matsumoto 606/181
2005/0288699 A1 12/2005 Schraga 606/181
2006/0000549 A1 1/2006 Lang 156/320
2006/0003398 A1 1/2006 Heller 435/14
2006/0004270 A1 1/2006 Bedard 600/316
2006/0004271 A1 1/2006 Peyser 600/362
2006/0004272 A1 1/2006 Shah 600/365
2006/0006574 A1 1/2006 Lang 264/165
2006/0008389 A1 1/2006 Sacherer 422/102
2006/0015129 A1 1/2006 Shahrokni 606/181
2006/0016698 A1 1/2006 Lee 205/777.5
2006/0020228 A1 1/2006 Fowler 600/583
2006/0024774 A1 2/2006 Zocchi 435/14
2006/0025662 A1 2/2006 Buse 600/347
2006/0029979 A1 2/2006 Bai 435/7.1
2006/0029991 A1 2/2006 Hagino 435/14
2006/0030028 A1 2/2006 Nakaminami 435/287.2
2006/0030050 A1 2/2006 Milne 436/67
2006/0030761 A1 2/2006 Raskas 600/316
2006/0030788 A1 2/2006 Wong 600/583
2006/0034728 A1 2/2006 Kloepfer 422/68.1
2006/0037859 A1 2/2006 Hodges 204/400
2006/0040333 A1 2/2006 Zocchi 435/14
2006/0047220 A1 3/2006 Sakata 600/583
2006/0047294 A1 3/2006 Mori 606/181
2006/0052723 A1 3/2006 Roe 600/583
2006/0052724 A1 3/2006 Roe 600/583

2006/0052809 A1 3/2006 Karbowniczek 606/181
2006/0052810 A1 3/2006 Freeman 606/181
2006/0058827 A1 3/2006 Sakata 606/181
2006/0058828 A1 3/2006 Shi 606/181
2006/0062852 A1 3/2006 Holmes 424/484
2006/0063988 A1 3/2006 Schurman 600/316
2006/0064035 A1 3/2006 Wang 600/583
2006/0079739 A1 4/2006 Chen Wang 600/300
2006/0079810 A1 4/2006 Patel 600/583
2006/0079811 A1 4/2006 Roe 600/583
2006/0079920 A1 4/2006 Schraga 606/181
2006/0081469 A1 4/2006 Lee 204/403.02
2006/0085020 A1 4/2006 Freeman 606/181
2006/0085137 A1 4/2006 Bartkowiak 702/19
2006/0086624 A1 4/2006 Tapsak 205/775
2006/0088945 A1 4/2006 Douglas 436/518
2006/0089566 A1 4/2006 DeHart 600/573
2006/0091006 A1 5/2006 Wang 204/403.02
2006/0094944 A1 5/2006 Chuang 600/347
2006/0094947 A1 5/2006 Kovatchev 600/365
2006/0094985 A1 5/2006 Aceti 600/575
2006/0094986 A1 5/2006 Neel 600/583
2006/0095061 A1 5/2006 Trautman 606/185
2006/0096859 A1 5/2006 King 204/403.14
2006/0099107 A1 5/2006 Yamamoto 422/57
2006/0099703 A1 5/2006 Choi 435/287.1
2006/0100542 A9 5/2006 Wong 600/583
2006/0100543 A1 5/2006 Raney 600/583
2006/0100654 A1 5/2006 Fukuda 606/181
2006/0100655 A1 5/2006 Leong 606/181
2006/0100656 A1 5/2006 Olson 606/181
2006/0106373 A1 5/2006 Cahir 606/9
2006/0108236 A1 5/2006 Kasielke 205/792
2006/0113187 A1 6/2006 Deng 204/403.01
2006/0115857 A1 6/2006 Keen 435/7.1
2006/0116562 A1 6/2006 Acosta 600/316
2006/0116704 A1 6/2006 Ashby 606/167
2006/0116705 A1 6/2006 Schraga 606/181
2006/0119362 A1 6/2006 Kermani 324/324
2006/0121547 A1 6/2006 McIntire 435/14
2006/0121625 A1 6/2006 Clemens 436/514
2006/0121759 A1 6/2006 Kasai 439/188
2006/0122099 A1 6/2006 Aoki 514/3
2006/0122536 A1 6/2006 Haar 600/581
2006/0129065 A1 6/2006 Matsumoto 600/583
2006/0129172 A1 6/2006 Crossman 606/181
2006/0129173 A1 6/2006 Wilkinson 606/181
2006/0134713 A1 6/2006 Rylatt 435/7.92
2006/0140457 A1 6/2006 Simshauser 382/124
2006/0144704 A1 7/2006 Ghesquiere 204/403.01
2006/0151323 A1 7/2006 Cho 204/403.04
2006/0151342 A1 7/2006 Yaguchi 206/306
2006/0155215 A1 7/2006 Cha 600/583
2006/0155316 A1 7/2006 Perez 606/181
2006/0155317 A1 7/2006 List 606/181
2006/0156796 A1 7/2006 Burke 73/61.44
2006/0157362 A1 7/2006 Schraga 206/363
2006/0160100 A1 7/2006 Gao 435/6
2006/0161078 A1 7/2006 Schraga 600/583
2006/0161194 A1 7/2006 Freeman 606/185
2006/0163061 A1 7/2006 Hodges 204/401
2006/0166302 A1 7/2006 Clarke 435/25
2006/0167382 A1 7/2006 Deshmukh 600/583
2006/0169599 A1 8/2006 Feldman 205/792
2006/0173254 A1 8/2006 Acosta 600/316
2006/0173255 A1 8/2006 Acosta 600/316
2006/0173379 A1 8/2006 Rasch-Menges 600/583
2006/0173380 A1 8/2006 Hoenes 600/583
2006/0173478 A1 8/2006 Schraga 606/181
2006/0175216 A1 8/2006 Freeman 206/363
2006/0178573 A1 8/2006 Kermani 600/347
2006/0178599 A1 8/2006 Faupel 600/578
2006/0178600 A1 8/2006 Kennedy 600/584
2006/0178686 A1 8/2006 Schraga 606/181
2006/0178687 A1 8/2006 Freeman 606/181
2006/0178688 A1 8/2006 Freeman 606/181
2006/0178689 A1 8/2006 Freeman 606/181
2006/0178690 A1 8/2006 Freeman 606/181
2006/0183871 A1 8/2006 Ward 525/464
2006/0183983 A1 8/2006 Acosta 600/316
2006/0184065 A1 8/2006 Deshmukh 600/583
2006/0184101 A1 8/2006 Srinivasan 604/68
2006/0188395 A1 8/2006 Taniike 422/57
2006/0189895 A1 8/2006 Neel 600/584
2006/0191787 A1 8/2006 Wang 204/400
2006/0195023 A1 8/2006 Acosta 600/316
2006/0195047 A1 8/2006 Freeman 600/583
2006/0195128 A1 8/2006 Alden 606/181
2006/0195129 A1 8/2006 Freeman 606/181
2006/0195130 A1 8/2006 Freeman 606/181
2006/0195131 A1 8/2006 Freeman 606/181
2006/0195132 A1 8/2006 Freeman 606/181
2006/0195133 A1 8/2006 Freeman 606/181
2006/0196031 A1 9/2006 Hoenes 29/432
2006/0196795 A1 9/2006 Windus-Smith 206/438
2006/0200044 A1 9/2006 Freeman 600/583
2006/0200045 A1 9/2006 Roe 600/583
2006/0200046 A1 9/2006 Windus-Smith 600/583
2006/0200181 A1 9/2006 Fukuzawa 606/181
2006/0200981 A1 9/2006 Bhullar 29/847
2006/0200982 A1 9/2006 Bhullar 29/847
2006/0201804 A1 9/2006 Chambers 204/400
2006/0204399 A1 9/2006 Freeman 422/58
2006/0205029 A1 9/2006 Heller 435/25
2006/0205060 A1 9/2006 Kim 435/287.2
2006/0206135 A1 9/2006 Uehata 606/181
2006/0211127 A1 9/2006 Iwaki 436/169
2006/0211927 A1 9/2006 Acosta 600/316
2006/0211931 A1 9/2006 Blank 600/344
2006/0219551 A1 10/2006 Edelbrock 204/403.14
2006/0222567 A1 10/2006 Kloepfer 422/68.1
2006/0224171 A1 10/2006 Sakata 606/181
2006/0224172 A1 10/2006 LeVaughn 606/181
2006/0229532 A1 10/2006 Wong 600/583
2006/0229533 A1 10/2006 Hoenes 600/584
2006/0229651 A1 10/2006 Marshall 606/181
2006/0231396 A1 10/2006 Yamaoka 204/403.14
2006/0231418 A1 10/2006 Harding 205/775
2006/0231421 A1 10/2006 Diamond 205/777.5
2006/0231423 A1 10/2006 Harding 205/792
2006/0231425 A1 10/2006 Harding 205/792
2006/0231442 A1 10/2006 Windus-Smith 206/438
2006/0232278 A1 10/2006 Diamond 324/444
2006/0232528 A1 10/2006 Harding 345/87
2006/0233666 A1 10/2006 Vu 422/68.1
2006/0234263 A1 10/2006 Light 435/6
2006/0234369 A1 10/2006 Sih 435/287.1
2006/0235284 A1 10/2006 Lee 600/345
2006/0235454 A1 10/2006 LeVaughn 606/181
2006/0241517 A1 10/2006 Fowler 600/583
2006/0241666 A1 10/2006 Briggs 606/181
2006/0241667 A1 10/2006 Freeman 606/181
2006/0241668 A1 10/2006 Schraga 606/181
2006/0241669 A1 10/2006 Stout 606/182
2006/0247154 A1 11/2006 Palmieri 514/8
2006/0247554 A1 11/2006 Roe 600/583
2006/0247555 A1 11/2006 Harttig 600/584
2006/0247670 A1 11/2006 LeVaughn 606/181
2006/0247671 A1 11/2006 Levaughn 606/182
2006/0254932 A1 11/2006 Hodges 205/775
2006/0259057 A1 11/2006 Kim 606/181
2006/0259058 A1 11/2006 Schiff 606/181
2006/0259060 A1 11/2006 Whitson 606/182
2006/0264718 A1 11/2006 Ruchti 600/310
2006/0264996 A1 11/2006 Levaughn 606/181
2006/0264997 A1 11/2006 Colonna 606/181
2006/0266644 A1 11/2006 Pugh 204/400
2006/0266765 A1 11/2006 Pugh 222/1
2006/0271083 A1 11/2006 Boecker 606/181
2006/0271084 A1 11/2006 Schraga 606/182
2006/0276724 A1 12/2006 Freeman 600/583
2006/0277048 A1 12/2006 Kintzig 704/275
2006/0278545 A1 12/2006 Henning 206/363
2006/0279431 A1 12/2006 Bakarania 340/870.02
2006/0281187 A1 12/2006 Emery 436/169
2006/0282109 A1 12/2006 Jansen 606/181
2006/0286620 A1 12/2006 Werner 435/14
2006/0287664 A1 12/2006 Grage 606/181

2006/0293577 A1 12/2006 Morrison 600/365
2007/0004989 A1 1/2007 Dhillon 600/583
2007/0004990 A1 1/2007 Kistner 600/583
2007/0007183 A1 1/2007 Schulat 209/573
2007/0009381 A1 1/2007 Schulat 422/58
2007/0010839 A1 1/2007 Galloway 606/167
2007/0010841 A1 1/2007 Teo 606/181
2007/0015978 A1 1/2007 Kanayama 600/310
2007/0016079 A1 1/2007 Freeman 600/476
2007/0016103 A1 1/2007 Calasso 600/583
2007/0016104 A1 1/2007 Jansen 600/583
2007/0016239 A1 1/2007 Sato 606/181
2007/0017805 A1 1/2007 Hodges 204/400
2007/0027370 A1 2/2007 Brauker 600/309
2007/0027427 A1 2/2007 Trautman 604/46
2007/0032812 A1 2/2007 Loerwald 606/181
2007/0032813 A1 2/2007 Flynn 606/181
2007/0038149 A1 2/2007 Calasso 600/583
2007/0038235 A1 2/2007 Freeman 606/181
2007/0043305 A1 2/2007 Boecker 600/583
2007/0043386 A1 2/2007 Freeman 606/181
2007/0049901 A1 3/2007 Wu 604/506
2007/0049959 A1 3/2007 Feaster 606/181
2007/0055174 A1 3/2007 Freeman 600/583
2007/0055297 A1 3/2007 Fukuzawa 606/181
2007/0055298 A1 3/2007 Uehata 606/181
2007/0060842 A1 3/2007 Alvarez-Icaza 600/583
2007/0060843 A1 3/2007 Alvarez-Icaza 600/583
2007/0060844 A1 3/2007 Alvarez-Icaza 600/583
2007/0060845 A1 3/2007 Perez 600/583
2007/0061393 A1 3/2007 Chen 205/777.5
2007/0062250 A1 3/2007 Krulevitch 73/1.16
2007/0062251 A1 3/2007 Anex 73/1.36
2007/0062315 A1 3/2007 Hodges 73/864.72
2007/0064516 A1 3/2007 Briggs 365/230.05
2007/0066939 A1 3/2007 Krulevitch 604/152
2007/0066940 A1 3/2007 Karunaratne 604/152
2007/0068807 A1 3/2007 Feldman 204/403.01
2007/0073188 A1 3/2007 Freeman 600/583
2007/0073189 A1 3/2007 Freeman 600/583
2007/0074977 A1 4/2007 Guo 205/792
2007/0078358 A1 4/2007 Escutia 600/573
2007/0078360 A1 4/2007 Matsumoto 600/583
2007/0078474 A1 4/2007 Kim 606/181
2007/0080093 A1 4/2007 Boozer 206/569
2007/0083130 A1 4/2007 Thomson 600/583
2007/0083131 A1 4/2007 Escutia 600/583
2007/0083222 A1 4/2007 Schraga 606/181
2007/0083335 A1 4/2007 Moerman 702/19
2007/0084749 A1 4/2007 Demelo 206/569
2007/0088377 A1 4/2007 LeVaughn 606/181
2007/0092923 A1 4/2007 Chang 435/14
2007/0093728 A1 4/2007 Douglas 600/583
2007/0093752 A1 4/2007 Zhao 604/131
2007/0093753 A1 4/2007 Krulevitch 604/131
2007/0093863 A1 4/2007 Pugh 606/181
2007/0093864 A1 4/2007 Pugh 606/181
2007/0095178 A1 5/2007 Schraga 83/13
2007/0100255 A1 5/2007 Boecker 600/583
2007/0100256 A1 5/2007 Sansom 600/583
2007/0100364 A1 5/2007 Sansom 606/181
2007/0102312 A1 5/2007 Cha 206/363
2007/0106178 A1 5/2007 Roe 600/583
2007/0108048 A1 5/2007 Wang 204/403.01
2007/0112281 A1 5/2007 Olson 600/583
2007/0112367 A1 5/2007 Olson 606/181
2007/0119710 A1 5/2007 Goldberger 204/403.01
2007/0123801 A1 5/2007 Goldberger 600/583
2007/0123802 A1 5/2007 Freeman 600/583
2007/0129618 A1 6/2007 Goldberger 600/345
2007/0129650 A1 6/2007 Freeman 600/583
2007/0131565 A1 6/2007 Fujiwara 205/777.5
2007/0135828 A1 6/2007 Rutynowski 606/181
2007/0142747 A1 6/2007 Boecker 600/583
2007/0142748 A1 6/2007 Freeman 600/583
2007/0142776 A9 6/2007 Kovelman 604/136
2007/0142854 A1 6/2007 Schraga 606/181
2007/0144235 A1 6/2007 Werner 73/1.82
2007/0149875 A1 6/2007 Ouyang 600/347
2007/0149897 A1 6/2007 Ghesquiere 600/583
2007/0161960 A1 7/2007 Chen 604/187
2007/0162064 A1 7/2007 Starnes 606/181
2007/0162065 A1 7/2007 Li 606/182
2007/0167869 A1 7/2007 Roe 600/583
2007/0167870 A1 7/2007 Freeman 600/583
2007/0167871 A1 7/2007 Freeman 600/583
2007/0167872 A1 7/2007 Freeman 600/583
2007/0167873 A1 7/2007 Freeman 600/583
2007/0167874 A1 7/2007 Freeman 600/583
2007/0167875 A1 7/2007 Freeman 600/583
2007/0173739 A1 7/2007 Chan 600/583
2007/0173740 A1 7/2007 Chan 600/583
2007/0173741 A1 7/2007 Deshmukh et al.
2007/0173742 A1 7/2007 Deshmukh 600/583
2007/0173743 A1 7/2007 Freeman 600/583
2007/0173874 A1 7/2007 Uschold 606/181
2007/0173875 A1 7/2007 Uschold 606/181
2007/0173876 A1 7/2007 Aylett 606/181
2007/0176120 A1 8/2007 Schwind 250/492.1
2007/0179356 A1 8/2007 Wessel 600/300
2007/0179404 A1 8/2007 Escutia 600/583
2007/0179405 A1 8/2007 Emery 600/583
2007/0179406 A1 8/2007 DeNuzzio 600/583
2007/0182051 A1 8/2007 Harttig 264/138
2007/0185412 A1 8/2007 Boecker 600/583
2007/0185515 A1 8/2007 Stout 606/181
2007/0185516 A1 8/2007 Schosnig 606/181
2007/0191702 A1 8/2007 Yodfat 600/365
2007/0191737 A1 8/2007 Freeman 600/583
2007/0191738 A1 8/2007 Raney 600/583
2007/0191739 A1 8/2007 Roe 600/583
2007/0193019 A1 8/2007 Feldman 29/592.1
2007/0193882 A1 8/2007 Dai 204/403.02
2007/0196240 A1 8/2007 Boozer 422/102
2007/0196242 A1 8/2007 Boozer 422/102
2007/0203514 A1 8/2007 Flaherty 606/181
2007/0203903 A1 8/2007 Attaran Rezaei 707/5
2007/0205103 A1 9/2007 Hodges 204/403.01
2007/0207498 A1 9/2007 Palmieri 435/7.1
2007/0213601 A1 9/2007 Freeman 600/300
2007/0213637 A1 9/2007 Boozer 600/583
2007/0213682 A1 9/2007 Haar 604/500
2007/0213756 A1 9/2007 Freeman 606/181
2007/0218543 A1 9/2007 Flaherty 435/287.1
2007/0219346 A1 9/2007 Trifiro 530/308
2007/0219432 A1 9/2007 Thompson 600/300
2007/0219436 A1 9/2007 Takase 600/310
2007/0219462 A1 9/2007 Briggs 600/583
2007/0219463 A1 9/2007 Briggs 600/583
2007/0219572 A1 9/2007 Deck 606/181
2007/0219573 A1 9/2007 Freeman 606/183
2007/0219574 A1 9/2007 Freeman 606/185
2007/0225741 A1 9/2007 Ikeda 606/182
2007/0225742 A1 9/2007 Abe 606/182
2007/0227907 A1 10/2007 Shah 205/777.5
2007/0227911 A1 10/2007 Wang 205/792
2007/0227912 A1 10/2007 Chatelier 205/792
2007/0229085 A1 10/2007 Kawai 324/450
2007/0232872 A1 10/2007 Prough 600/316
2007/0232956 A1 10/2007 Harman 600/573
2007/0233013 A1 10/2007 Schoenberg 604/192
2007/0233166 A1 10/2007 Stout 606/182
2007/0233167 A1 10/2007 Weiss 606/182
2007/0233395 A1 10/2007 Neel 702/19
2007/0235329 A1 10/2007 Harding 204/403.01
2007/0235347 A1 10/2007 Chatelier 205/792
2007/0239068 A1 10/2007 Rasch-Menges 600/573
2007/0239188 A1 10/2007 Boozer 606/181
2007/0239189 A1 10/2007 Freeman 606/181
2007/0239190 A1 10/2007 Alden 606/181
2007/0240984 A1 10/2007 Popovich 204/403.01
2007/0240986 A1 10/2007 Reymond 204/412
2007/0244380 A1 10/2007 Say 600/347
2007/0244412 A1 10/2007 Lav 600/584
2007/0244498 A1 10/2007 Steg 606/181
2007/0244499 A1 10/2007 Briggs 606/182
2007/0249921 A1 10/2007 Groll 600/347
2007/0249962 A1 10/2007 Alden 600/583

2007/0249963 A1 10/2007 Alden 600/583
2007/0250099 A1 10/2007 Flora 606/181
2007/0251836 A1 11/2007 Hsu 205/792
2007/0254359 A1 11/2007 Rezania 435/325
2007/0255141 A1 11/2007 Esenaliev 600/475
2007/0255178 A1 11/2007 Alvarez-Icaza 600/583
2007/0255179 A1 11/2007 Alvarez-Icaza 600/583
2007/0255180 A1 11/2007 Alvarez-Icaza 600/583
2007/0255181 A1 11/2007 Alvarez-Icaza 600/583
2007/0255300 A1 11/2007 Vanhiel 606/181
2007/0255301 A1 11/2007 Freeman 606/181
2007/0255302 A1 11/2007 Koeppel 606/182
2007/0260271 A1 11/2007 Freeman 606/181
2007/0260272 A1 11/2007 Weiss 606/181
2007/0264721 A1 11/2007 Buck 436/150
2007/0265511 A1 11/2007 Renouf 600/319
2007/0265532 A1 11/2007 Maynard 600/477
2007/0265654 A1 11/2007 Iio 606/185
2007/0273901 A1 11/2007 Baskeyfield 358/1.9
2007/0273903 A1 11/2007 Baskeyfield 358/1.9
2007/0273904 A1 11/2007 Robinson 358/1.9
2007/0273928 A1 11/2007 Robinson 358/1.9
2007/0276197 A1 11/2007 Harmon 600/300
2007/0276211 A1 11/2007 Mir 600/345
2007/0276290 A1 11/2007 Boecker 600/583
2007/0276425 A1 11/2007 Kim 606/186
2007/0276621 A1 11/2007 Davies 702/104
2007/0278097 A1 12/2007 Bhullar 204/403.01
2007/0282186 A1 12/2007 Gilmore 600/365
2007/0282362 A1 12/2007 Berg 606/181
2007/0288047 A1 12/2007 Thoes 606/182
2007/0293743 A1 12/2007 Monfre 600/316
2007/0293744 A1 12/2007 Monfre 600/316
2007/0293790 A1 12/2007 Bainczyk 600/583
2007/0293882 A1 12/2007 Harttig 606/181
2007/0293883 A1 12/2007 Horie 606/181
2007/0295616 A1 12/2007 Harding 205/777.5
2008/0004651 A1 1/2008 Nicholls 606/182
2008/0007141 A1 1/2008 Deck 310/328
2008/0009767 A1 1/2008 Effenhauser 600/583
2008/0009768 A1 1/2008 Sohrab 600/583
2008/0009892 A1 1/2008 Freeman 606/181
2008/0009893 A1 1/2008 LeVaughn 606/181
2008/0015425 A1 1/2008 Douglas 600/347
2008/0015623 A1 1/2008 Deck 606/181
2008/0017522 A1 1/2008 Heller 205/777.5
2008/0019870 A1 1/2008 Newman 422/68.1
2008/0021291 A1 1/2008 Zocchi 600/300
2008/0021293 A1 1/2008 Schurman 600/316
2008/0021295 A1 1/2008 Wang 600/347
2008/0021296 A1 1/2008 Creaven 600/365
2008/0021346 A1 1/2008 Haar 600/583
2008/0021490 A1 1/2008 Briggs 606/181
2008/0021491 A1 1/2008 Freeman 606/181
2008/0021492 A1 1/2008 Freeman 606/181
2008/0021493 A1 1/2008 Levaughn 606/181
2008/0021494 A1 1/2008 Schmelzeisen-R 606/181
2008/0027385 A1 1/2008 Freeman 604/117
2008/0031778 A1 2/2008 Kramer 422/68.1
2008/0033268 A1 2/2008 Stafford 600/345
2008/0033318 A1 2/2008 Mace 600/583
2008/0033319 A1 2/2008 Kloepfer 600/583
2008/0033468 A1 2/2008 Lathrop 606/181
2008/0033469 A1 2/2008 Winheim 606/181
2008/0034834 A1 2/2008 Schell 73/1.02
2008/0034835 A1 2/2008 Schell 73/1.02
2008/0039885 A1 2/2008 Purcell 606/182
2008/0039886 A1 2/2008 Shi 606/182
2008/0039887 A1 2/2008 Conway 606/182
2008/0040919 A1 2/2008 Griss 29/777
2008/0045825 A1 2/2008 Melker 600/365
2008/0045992 A1 2/2008 Schraga 606/182
2008/0047764 A1 2/2008 Lee et al.
2008/0053201 A1 3/2008 Roesicke 73/61.41
2008/0057484 A1 3/2008 Miyata 434/739
2008/0058624 A1 3/2008 Smart 600/345
2008/0058626 A1 3/2008 Miyata 600/365
2008/0058631 A1 3/2008 Draudt 600/385
2008/0058847 A1 3/2008 Abe 606/181
2008/0058848 A1 3/2008 Griffin 606/182
2008/0058849 A1 3/2008 Conway 606/183
2008/0060424 A1 3/2008 Babic 73/61.41
2008/0064986 A1 3/2008 Kraemer 600/583
2008/0064987 A1 3/2008 Escutia 600/583
2008/0065130 A1 3/2008 Patel 606/181
2008/0065131 A1 3/2008 List 606/181
2008/0065132 A1 3/2008 Trissel 606/182
2008/0065133 A1 3/2008 Kennedy 606/182
2008/0065134 A1 3/2008 Conway 606/182
2008/0073224 A1 3/2008 Diamond 205/775
2008/0077048 A1 3/2008 Escutia 600/583
2008/0077167 A1 3/2008 Flynn 606/172
2008/0077168 A1 3/2008 Nicholls 606/182
2008/0081969 A1 4/2008 Feldman 600/322
2008/0081976 A1 4/2008 Hodges 600/345
2008/0082023 A1 4/2008 Deck 600/583
2008/0082116 A1 4/2008 Lathrop 606/181
2008/0082117 A1 4/2008 Ruf 606/182
2008/0086042 A1 4/2008 Brister 600/347
2008/0086044 A1 4/2008 Brister 600/365
2008/0086273 A1 4/2008 Shults 702/19
2008/0093227 A1 4/2008 Diamond 205/775
2008/0093228 A1 4/2008 Diamond 205/782
2008/0093230 A1 4/2008 Diamond 205/792
2008/0094804 A1 4/2008 Reynolds 361/727
2008/0097171 A1 4/2008 Smart 600/309
2008/0097241 A1 4/2008 Maltezos 600/576
2008/0097503 A1 4/2008 Creaven 606/182
2008/0098802 A1 5/2008 Burke 73/61.61
2008/0103396 A1 5/2008 Johnson 600/477
2008/0103415 A1 5/2008 Roe 600/583
2008/0103517 A1 5/2008 Takemoto 606/182
2008/0105024 A1 5/2008 Creaven 73/1.02
2008/0105568 A1 5/2008 Wu 205/780.5
2008/0108130 A1 5/2008 Nakaminami 435/287.1
2008/0108942 A1 5/2008 Brister 604/118
2008/0109024 A1 5/2008 Berkovitch 606/181
2008/0109025 A1 5/2008 Yang 606/182
2008/0109259 A1 5/2008 Thompson 705/3
2008/0114227 A1 5/2008 Haar 600/347
2008/0114228 A1 5/2008 McCluskey 600/365
2008/0118400 A1 5/2008 Neel 422/68.1
2008/0119703 A1 5/2008 Brister 600/347
2008/0119704 A1 5/2008 Brister 600/347
2008/0119706 A1 5/2008 Brister 600/365
2008/0119761 A1 5/2008 Boecker 600/583
2008/0119883 A1 5/2008 Conway 606/181
2008/0119884 A1 5/2008 Flora 606/182
2008/0121533 A1 5/2008 Hodges 205/775
2008/0125800 A1 5/2008 List 606/181
2008/0125801 A1 5/2008 List 606/181
2008/0134806 A1 6/2008 Capriccio 73/863.21
2008/0134810 A1 6/2008 Neel 73/866
2008/0135559 A1 6/2008 Byrd 220/506
2008/0140105 A1 6/2008 Zhong 606/182
2008/0144022 A1 6/2008 Schulat 356/213
2008/0146899 A1 6/2008 Ruchti 600/316
2008/0146966 A1 6/2008 LeVaughn 600/583
2008/0147108 A1 6/2008 Kennedy 606/182
2008/0149268 A1 6/2008 Zhao 156/299
2008/0149599 A1 6/2008 Bohm 216/94
2008/0152507 A1 6/2008 Bohm 417/44.1
2008/0154187 A1 6/2008 Krulevitch 604/48
2008/0154513 A1 6/2008 Kovatchev 702/19
2008/0159913 A1 7/2008 Jung 422/57
2008/0161664 A1 7/2008 Mastrototaro 600/347
2008/0161724 A1 7/2008 Roe 600/583
2008/0161725 A1 7/2008 Wong 600/583
2008/0166269 A1 7/2008 Jansen 422/63
2008/0167578 A1 7/2008 Bryer 600/583
2008/0167673 A1 7/2008 Zhong 606/181
2008/0188771 A1 8/2008 Boecker 600/583
2008/0194987 A1 8/2008 Boecker 600/583
2008/0194989 A1 8/2008 Briggs 600/583
2008/0208026 A1 8/2008 Noujaim 600/365
2008/0208079 A1 8/2008 Hein 600/583
2008/0210574 A1 9/2008 Boecker 205/777.5
2008/0214909 A1 9/2008 Fuerst 600/309

2008/0214917	A1	9/2008	Boecker	600/347
2008/0214919	A1	9/2008	Harmon	600/365
2008/0214956	A1	9/2008	Briggs	600/575
2008/0228212	A1	9/2008	List	606/182
2008/0249435	A1	10/2008	Haar	600/583
2008/0249554	A1	10/2008	Freeman	606/181
2008/0255598	A1	10/2008	LeVaughn et al.	606/183
2008/0262387	A1	10/2008	List	600/583
2008/0262388	A1	10/2008	List	600/583
2008/0267822	A1	10/2008	List	422/68.1
2008/0269723	A1	10/2008	Mastrototaro	604/890.1
2008/0269791	A1	10/2008	Hoenes	606/181
2008/0275365	A1	11/2008	Guthrie	600/584
2008/0275384	A1	11/2008	Mastrototaro	604/66
2008/0277291	A1	11/2008	Heller	205/777.5
2008/0277292	A1	11/2008	Heller	205/777.5
2008/0277293	A1	11/2008	Heller	205/777.5
2008/0277294	A1	11/2008	Heller	205/777.5
2008/0286149	A1	11/2008	Roe	422/58
2008/0294068	A1	11/2008	Briggs	600/583
2008/0300614	A1	12/2008	Freeman	606/181
2008/0318193	A1	12/2008	Alvarez-Icaza	434/262
2008/0319284	A1	12/2008	Alvarez-Icaza	600/309
2008/0319291	A1	12/2008	Freeman	600/347
2009/0005664	A1	1/2009	Freeman	600/347
2009/0020438	A1	1/2009	Hodges	205/782
2009/0024009	A1	1/2009	Freeman	600/309
2009/0026075	A1	1/2009	Harding	204/403.14
2009/0026091	A1	1/2009	Harding	205/777.5
2009/0027040	A1	1/2009	Kermani	324/123
2009/0029479	A1	1/2009	Docherty	436/149
2009/0030441	A1	1/2009	Hoerauf	600/583
2009/0043177	A1	2/2009	Milledge	600/309
2009/0043183	A1	2/2009	Kermani	600/365
2009/0048536	A1	2/2009	Freeman	600/583
2009/0054813	A1	2/2009	Freeman	600/584
2009/0057146	A1	3/2009	Teodoreczyk	204/403.01
2009/0069716	A1	3/2009	Freeman	600/583
2009/0084687	A1	4/2009	Chatelier	205/792
2009/0105572	A1	4/2009	Malecha	600/365
2009/0105573	A1	4/2009	Malecha	600/365
2009/0112123	A1	4/2009	Freeman	600/583
2009/0112155	A1	4/2009	Zhao	604/67
2009/0112180	A1	4/2009	Krulevitch	604/506
2009/0112185	A1	4/2009	Krulevitch	604/523
2009/0124932	A1	5/2009	Freeman	606/181
2009/0131829	A1	5/2009	Freeman	600/583
2009/0131830	A1	5/2009	Freeman	600/583
2009/0131964	A1	5/2009	Freeman	606/181
2009/0131965	A1	5/2009	Freeman	606/181
2009/0137930	A1	5/2009	Freeman .	600/583
2009/0138032	A1	5/2009	Freeman	606/181
2009/0139300	A1	6/2009	Pugh	73/1.36
2009/0184004	A1	7/2009	Chatelier	205/777.5
2009/0187351	A1	7/2009	Orr	702/19
2009/0192410	A1	7/2009	Freeman	600/583
2009/0192411	A1	7/2009	Freeman	600/583
2009/0196580	A1	8/2009	Freeman	386/124
2009/0204025	A1	8/2009	Marsot	600/573
2009/0216100	A1	8/2009	Ebner	600/347
2009/0237262	A1	9/2009	Smith	340/634
2009/0240127	A1	9/2009	Pinaki	600/365
2009/0247838	A1	10/2009	Cummings	600/309
2009/0247982	A1	10/2009	Krulevitch	604/500
2009/0259146	A1	10/2009	Freeman	600/583
2009/0280551	A1	11/2009	Cardosi	435/190
2009/0281457	A1	11/2009	Faulkner	600/583
2009/0281458	A1	11/2009	Faulkner	600/583
2009/0281459	A1	11/2009	Faulkner	600/583
2009/0301899	A1	12/2009	Hodges	205/777.5
2009/0302872	A1	12/2009	Haggett	324/715
2009/0302873	A1	12/2009	Haggett	324/724
2009/0322630	A1	12/2009	Friman	343/720
2009/0325307	A1	12/2009	Haggett	436/150
2010/0016700	A1	1/2010	Sieh	600/365
2010/0018878	A1	1/2010	Davies	205/782
2010/0030110	A1	2/2010	Choi	600/583
2010/0041084	A1	2/2010	Stephens	435/14

FOREIGN PATENT DOCUMENTS

DE	4212315	A1	10/1993
DE	4320347		12/1994
DE	4344452		6/1995
DE	4420232		12/1995
DE	29800611	U	7/1998
DE	19819407		11/1999
DE	20009475		10/2000
DE	29824204		10/2000
DE	10032042		1/2002
DE	10057832		2/2002
DE	10057832	C1	2/2002
DE	10142232		3/2003
DE	10208575	C1	8/2003
DE	10245721		12/2003
DE	10361560	A1	7/2005
EP	0112498	A2	7/1984
EP	137975	A2	4/1985
EP	0160768		11/1985
EP	0199484	A2	10/1986
EP	0254246		1/1988
EP	0289 269		11/1988
EP	0317847	A1	5/1989
EP	0320109		6/1989
EP	0 364 208	A1	4/1990
EP	0364208	A1	4/1990
EP	0170375		5/1990
EP	0136362		12/1990
EP	0449525		10/1991
EP	0453283		10/1991
EP	0263948		2/1992
EP	0449147	A2	8/1992
EP	0530994		3/1993
EP	0374355		6/1993
EP	0351891		9/1993
EP	0593096		4/1994
EP	0630609	A2	12/1994
EP	0415388		5/1995
EP	0654659		5/1995
EP	0505494		7/1995
EP	0662367	A1	7/1995
EP	0359831		8/1995
EP	0471986		10/1995
EP	0368474		12/1995
EP	0461601		12/1995
EP	0429076		1/1996
EP	0552223		7/1996
EP	0735363		10/1996
EP	0505504		3/1997
EP	0777123		6/1997
EP	0406304		8/1997
EP	0537761		8/1997
EP	0795601		9/1997
EP	0562370		11/1997
EP	0415393		12/1997
EP	0823239		2/1998
EP	0560336		5/1998
EP	0878 708		11/1998
EP	0 898 936	A2	3/1999
EP	0505475		3/1999
EP	0898936	A2	3/1999
EP	0901018		3/1999
EP	0470649		6/1999
EP	0 951 939		10/1999
EP	0 951 939	A2	10/1999
EP	0951939	A2	10/1999
EP	0847447		11/1999
EP	0964059		12/1999
EP	0964060		12/1999
EP	0969097		1/2000
EP	0985376	A1	3/2000
EP	0 985 376		5/2000
EP	1021950		7/2000
EP	0894869		2/2001
EP	1074832		2/2001
EP	1093854		4/2001
EP	1 101 443		5/2001
EP	1101443	A2	5/2001
EP	1114995		7/2001

EP	0736607		8/2001
EP	0874984		11/2001
EP	1157660		11/2001
EP	0730037		12/2001
EP	0636879		1/2002
EP	01174083		1/2002
EP	0851224		3/2002
EP	0759553		5/2002
EP	0856586		5/2002
EP	0817809		7/2002
EP	0872728		7/2002
EP	0795748		8/2002
EP	0685737		9/2002
EP	0958495		11/2002
EP	0937249		12/2002
EP	1337182		8/2003
EP	0880692		1/2004
EP	01374770		1/2004
EP	1404232		4/2004
EP	1404233		4/2004
EP	1246688		5/2004
EP	1502614		2/2005
EP	1643908		4/2006
EP	1790288		5/2007
EP	1790288	A1	5/2007
EP	1921992		5/2008
EP	2039294		3/2009
EP	2039294	A1	3/2009
FR	2 555 432	A	5/1985
FR	2555432		5/1985
FR	2622457		11/1987
GB	1558111		12/1979
GB	2168815		6/1986
GB	233936	A	6/1999
GB	2331936		6/1999
GB	2335860		10/1999
GB	2335860	A	10/1999
GB	2335990		10/1999
GB	2335990	A	10/1999
JP	HEI 4 194660		7/1992
JP	1996010208		12/1992
JP	9-276235		10/1997
JP	1014906		1/1998
JP	2000-116768		4/2000
WO	WO 80/01389		7/1980
WO	WO 85/04089		9/1985
WO	WO 86/07632		12/1985
WO	WO86/05966		10/1986
WO	WO 91/09139		6/1991
WO	WO92/03099		3/1992
WO	WO92/06971		4/1992
WO	WO92/07263		4/1992
WO	WO92/07468		5/1992
WO	WO93/00044		1/1993
WO	WO 93/02720		2/1993
WO	WO 93/06979		4/1993
WO	WO93/09723		5/1993
WO	WO 93/12726		7/1993
WO	WO 93/25898		12/1993
WO	WO 94/27140		11/1994
WO	WO 94/29703		12/1994
WO	WO 94/29704		12/1994
WO	WO 94/29731		12/1994
WO	WO 95/00662		1/1995
WO	WO 95/06240		3/1995
WO	WO 95/10223		4/1995
WO	WO95/12583		5/1995
WO	WO 95/22597		8/1995
WO	WO96/14799		5/1996
WO	WO 96/30431		10/1996
WO	WO96/37148		11/1996
WO	WO 97/02359		1/1997
WO	WO 97/02487		1/1997
WO	WO 97/11883		4/1997
WO	WO 97/11883	A1	4/1997
WO	WO 97/18464		5/1997
WO	WO97/28741		8/1997
WO	WO 97/30344		8/1997
WO	WO 97/42882		11/1997
WO	WO 97/42888		11/1997
WO	WO 97/45720		12/1997
WO	WO 98/03431		1/1998
WO	WO98/14436		4/1998
WO	WO 98/19159		5/1998
WO	WO98/19609		5/1998
WO	WO 98/20332		5/1998
WO	WO 98/20348		5/1998
WO	WO98/20867		5/1998
WO	WO 98/24366		6/1998
WO	WO 98 24373		6/1998
WO	WO 98/24373		6/1998
WO	WO 98/35225		8/1998
WO	WO98/45276		10/1998
WO	WO 99/03584		1/1999
WO	WO 99/05966		2/1999
WO	WO99/07295		2/1999
WO	WO 99/07431		2/1999
WO	WO 99/07431	A1	2/1999
WO	WO 99/62576		3/1999
WO	WO 99/17854		4/1999
WO	WO 99/18532		4/1999
WO	WO 99/19507		4/1999
WO	WO 99/19717		4/1999
WO	WO 99/27483		6/1999
WO	WO 99/27852		6/1999
WO	WO 99/13100		12/1999
WO	WO 99/64580		12/1999
WO	WO 00/06024		2/2000
WO	WO 00/09184		2/2000
WO	WO 00/11578		3/2000
WO	WO 00/15103		3/2000
WO	WO 00/17799		3/2000
WO	WO 00/17800		3/2000
WO	WO 00/18293		4/2000
WO	WO 00/19346		4/2000
WO	WO 00/20626		4/2000
WO	WO 00/29577		5/2000
WO	WO 00/30186		5/2000
WO	WO 00/32097		6/2000
WO	WO 00/32098		6/2000
WO	WO 00/33236		6/2000
WO	WO 00/39914		7/2000
WO	WO 00/42422		7/2000
WO	WO 00/44084		7/2000
WO	WO 00/46854		8/2000
WO	WO 00/50771		8/2000
WO	WO 00/55915		9/2000
WO	WO 00/60340		10/2000
WO	WO 00/64022		10/2000
WO	WO 00/67245		11/2000
WO	WO 00/67268		11/2000
WO	WO 00/72452		11/2000
WO	WO 01/00090		1/2001
WO	WO 01/15807		3/2001
WO	WO 01/15807	A1	3/2001
WO	WO 01/16578	A1	3/2001
WO	WO 01/75433		3/2001
WO	WO 01/23885		4/2001
WO	WO 01/25775		4/2001
WO	WO 01/26813		4/2001
WO	WO 01/29037		4/2001
WO	WO 01/33216		5/2001
WO	WO 01/34029		5/2001
WO	WO 01/36955		5/2001
WO	WO 01/37174		5/2001
WO	WO 01/45014	A1	6/2001
WO	WO 01/40788		7/2001
WO	WO 01/57510		8/2001
WO	WO 01/63271		8/2001
WO	WO 01/64105		9/2001
WO	WO 01/66010		9/2001
WO	WO 01/69505		9/2001
WO	WO 01/72220	A	10/2001
WO	WO 01/72220	A1	10/2001
WO	WO 01/72225		10/2001
WO	WO 01/73124		10/2001
WO	WO 01/73395		10/2001
WO	WO 01/89691		11/2001

WO	WO 01/95806		12/2001
WO	WO 02/00101		1/2002
WO	WO 02/02796		1/2002
WO	WO 02/08750		1/2002
WO	WO 02/08753		1/2002
WO	WO 02/08950		1/2002
WO	WO 02/18940		3/2002
WO	WO 02/21317		3/2002
WO	WO 02/25551		3/2002
WO	WO 02/32559		4/2002
WO	WO 02/41227		5/2002
WO	WO 02/41779		5/2002
WO	WO 02/44948		6/2002
WO	WO 02/49507		6/2002
WO	WO /0249507		6/2002
WO	WO 02/056769		7/2002
WO	WO 02/059734		8/2002
WO	WO 02/069791		9/2002
WO	WO 02/077638		10/2002
WO	WO 02/100251		12/2002
WO	WO 02/100252		12/2002
WO	WO 02/100253		12/2002
WO	WO 02/100254		12/2002
WO	WO 02/100460		12/2002
WO	WO 02/100461		12/2002
WO	WO 02/101343		12/2002
WO	WO 02/101359		12/2002
WO	WO 03/000321		1/2003
WO	WO 03/023389		3/2003
WO	WO 03/042691		5/2003
WO	WO 03039369	A	5/2003
WO	WO 03/045557		6/2003
WO	WO 03/046542		6/2003
WO	WO 03/049609		6/2003
WO	WO 03/050534		6/2003
WO	WO 03/066128		8/2003
WO	WO 03/070099		8/2003
WO	WO 03/071940		9/2003
WO	WO 03/082091		10/2003
WO	WO 03/082091	A2	10/2003
WO	WO 03/088824		10/2003
WO	WO 03/088834		10/2003
WO	WO 03/088835		10/2003
WO	WO 03/088851	A1	10/2003
WO	WO /03088834		10/2003
WO	WO 03/094752		11/2003
WO	WO 03/101297		12/2003
WO	WO 2004/008130		1/2004
WO	WO 2004/022133		3/2004
WO	WO 2004/026130		4/2004
WO	WO 2004/040285	A2	5/2004
WO	WO 2004/040287	A1	5/2004
WO	WO 2004/040948		5/2004
WO	WO 2004/041082		5/2004
WO	WO 2004/045375		6/2004
WO	WO 2004/054455		7/2004
WO	WO 2004/060174		7/2004
WO	WO 2004/060446		7/2004
WO	WO 2004/091693		10/2004
WO	WO 2004/098405		11/2004
WO	WO 2004/003147		12/2004
WO	WO 2004/107964		12/2004
WO	WO 2004/107975		12/2004
WO	WO 2004/112602		12/2004
WO	WO 2004/112612		12/2004
WO	WO 2004/112612	A1	12/2004
WO	WO 2005/001418		1/2005
WO	WO 2005/006939		1/2005
WO	WO 2005/011774		2/2005
WO	WO 2005/013824		2/2005
WO	WO 2005/016125		2/2005
WO	WO 2005/018425		3/2005
WO	WO 2005/018430		3/2005
WO	WO 2005/018454		3/2005
WO	WO 2005/018709		3/2005
WO	WO 2005/018710		3/2005
WO	WO 2005/018711		3/2005
WO	WO 2005/022143		3/2005
WO	WO 2005/023088		3/2005
WO	WO 2005/033659		4/2005
WO	WO 2005/034720		4/2005
WO	WO 2005/034721		4/2005
WO	WO 2005/034741		4/2005
WO	WO 2005/034778		4/2005
WO	WO 2005/035017		4/2005
WO	WO 2005/035018		4/2005
WO	WO 2005/037095		4/2005
WO	WO 2005/046477		5/2005
WO	WO 2005/065399		7/2005
WO	WO 2005/065414		7/2005
WO	WO 2005/065415		7/2005
WO	WO 20065545	A2	7/2005
WO	WO 2005/072604		8/2005
WO	WO 2005/084546	A2	9/2005
WO	WO 2005/084557		9/2005
WO	WO 2005/104948		11/2005
WO	WO 2005/104948	A1	11/2005
WO	WO 2005/114185		12/2005
WO	WO 2005/116622		12/2005
WO	WO 2005/119234		12/2005
WO	WO 2005/120197		12/2005
WO	WO 2005/120199		12/2005
WO	WO 2005/120365		12/2005
WO	WO 2005/120365	A1	12/2005
WO	WO 2005/121759		12/2005
WO	WO 2006/001797		1/2006
WO	WO 2006/001973		1/2006
WO	WO 2006/011062		2/2006
WO	WO 2006/013045		2/2006
WO	WO 2006/015615		2/2006
WO	WO 2006/027702	A2	3/2006
WO	WO 2006/031920		3/2006
WO	WO 2006/032391		3/2006
WO	WO 2006/072004		7/2006
WO	WO 2006/105146		10/2006
WO	WO 2006/116441		11/2006
WO	WO 2007/025635		3/2007
WO	WO 2007/044834		4/2007
WO	WO 2007/054335		5/2007
WO	WO 2007/070719		6/2007
WO	WO 2007/084367		7/2007
WO	WO 2007/106470		9/2007
WO	WO 2007/119900		10/2007
WO	WO 2008/112268		9/2008
WO	WO 2008/112279		9/2008

* cited by examiner

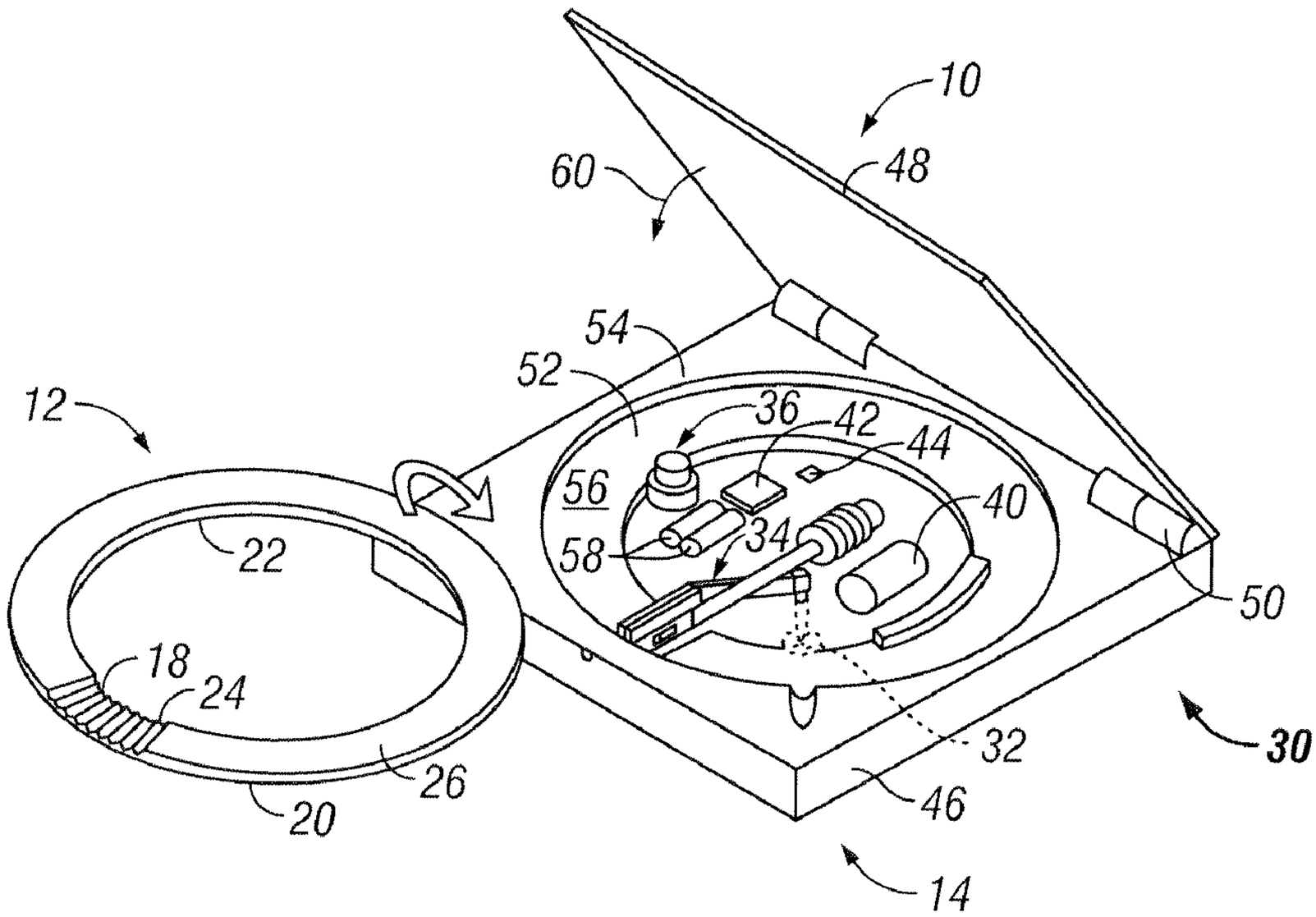

FIG. 1

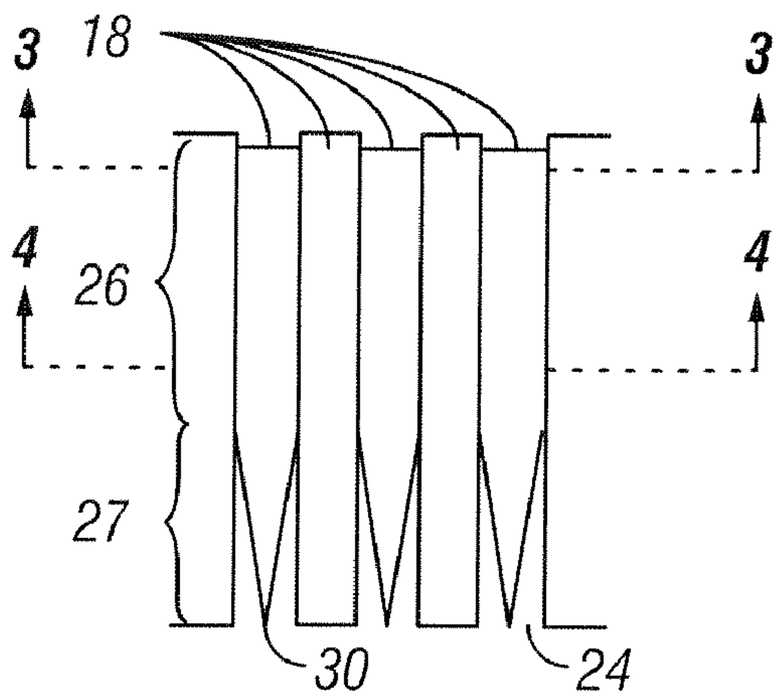

FIG. 2

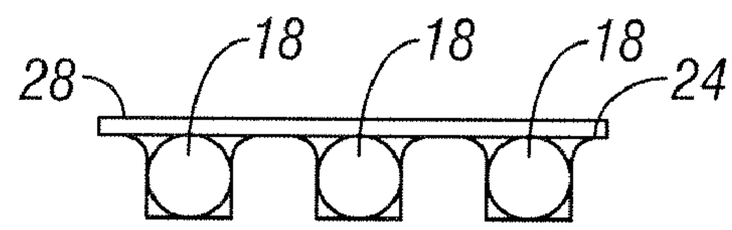

FIG. 3

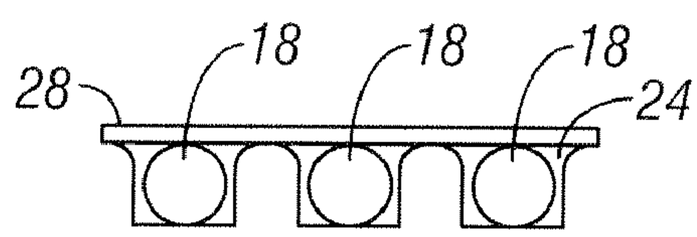

FIG. 4

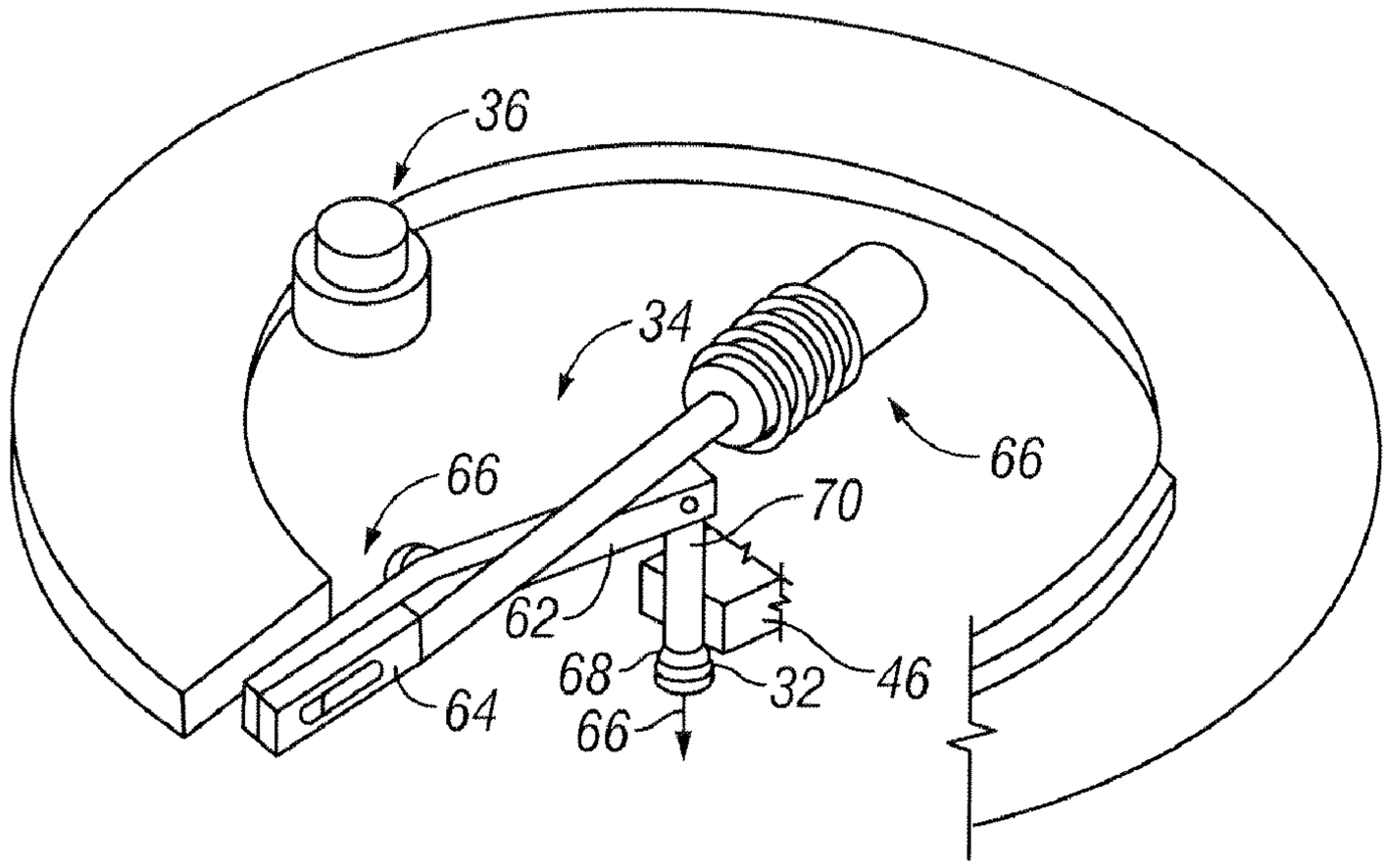

FIG. 5

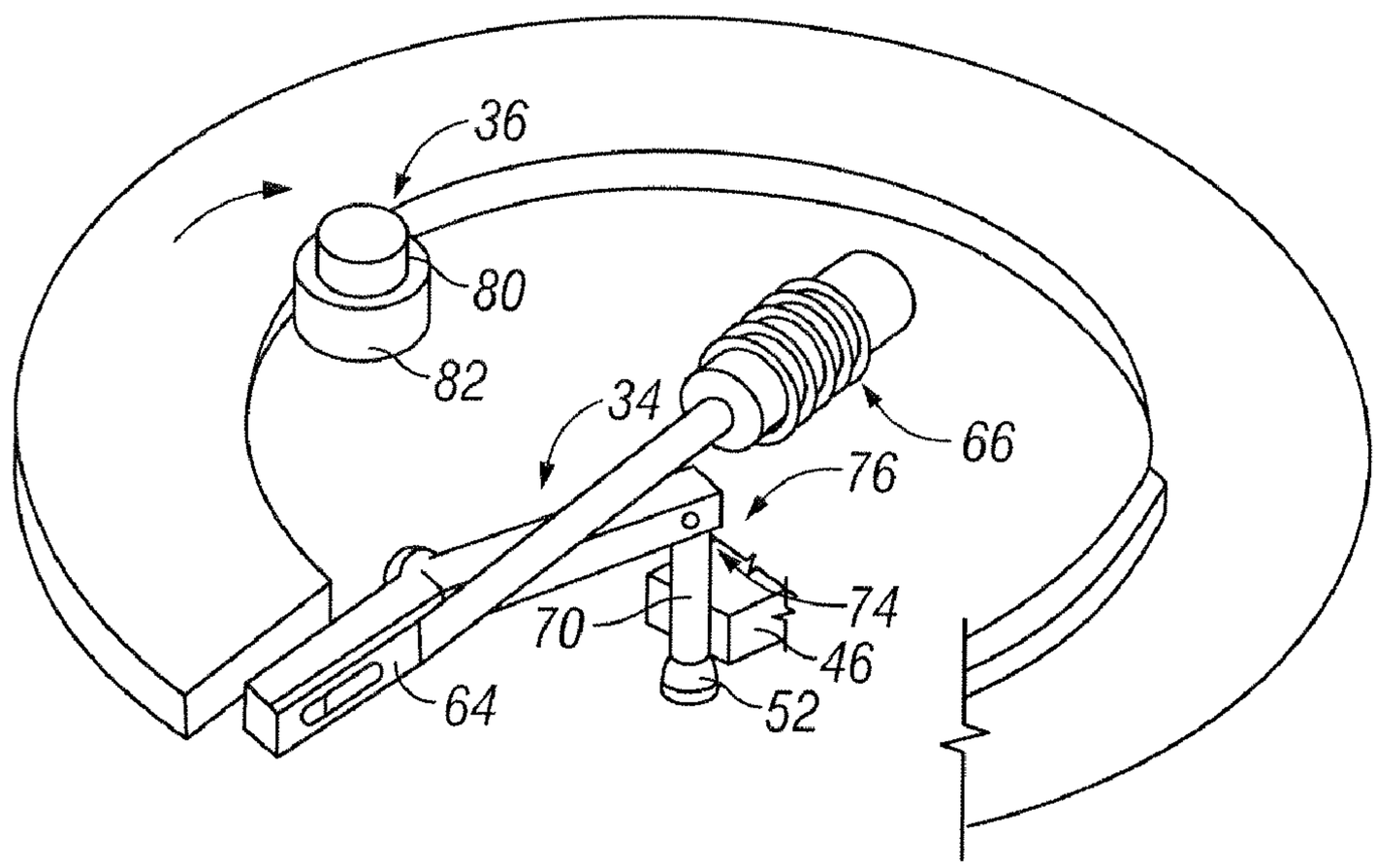

FIG. 6A

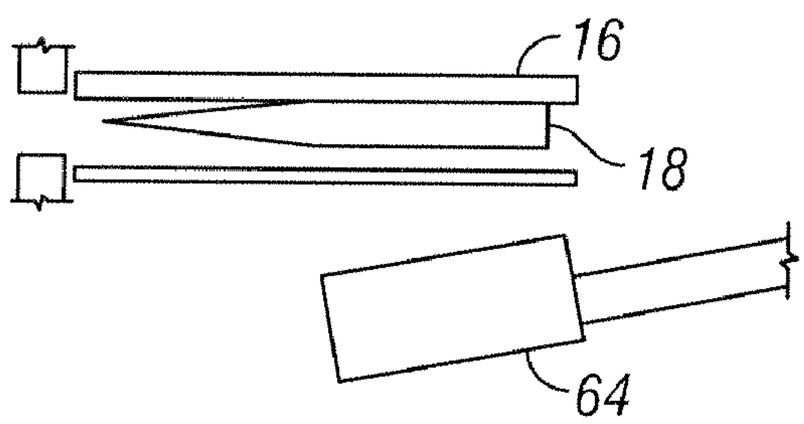

FIG. 6B

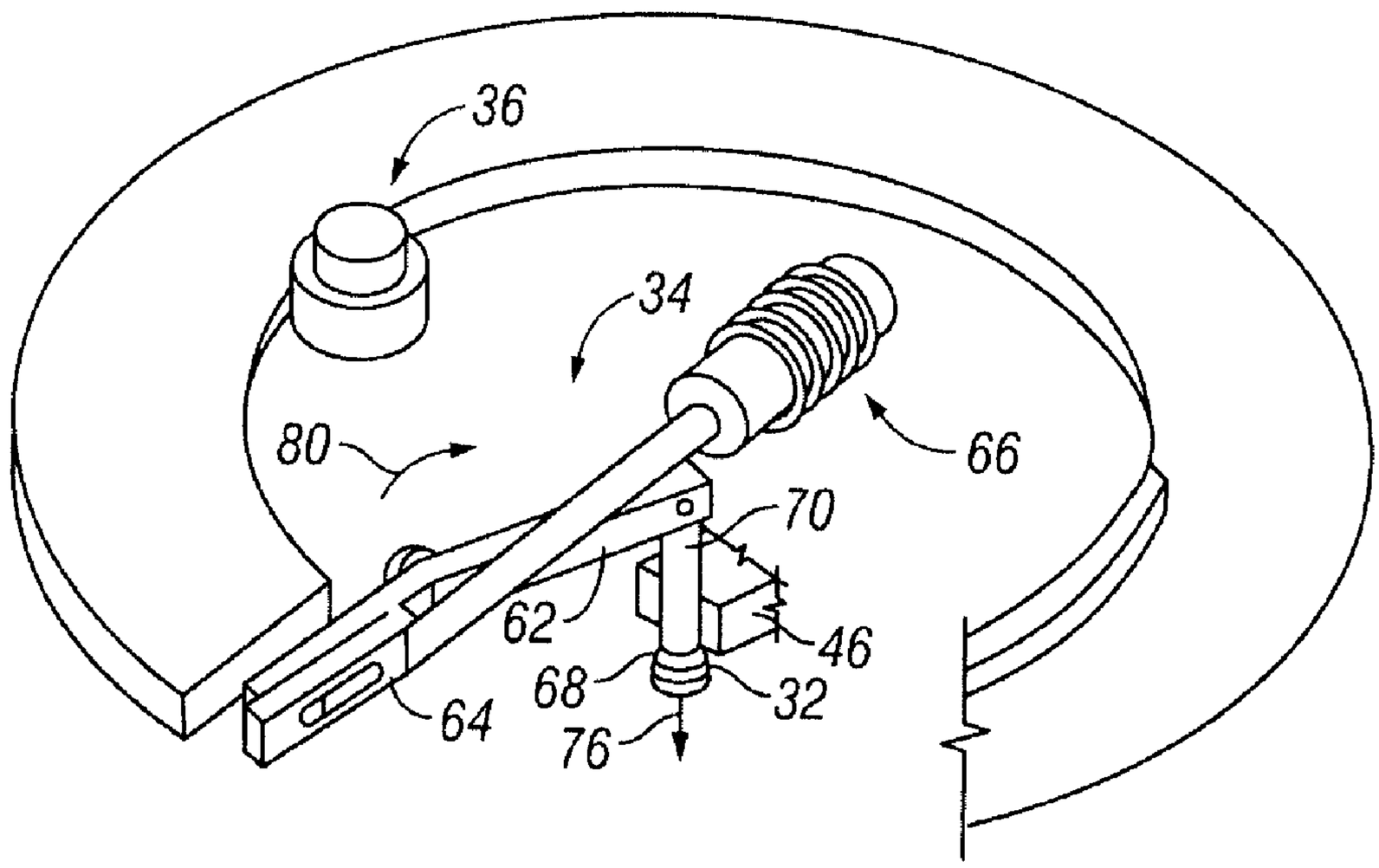

FIG. 7A

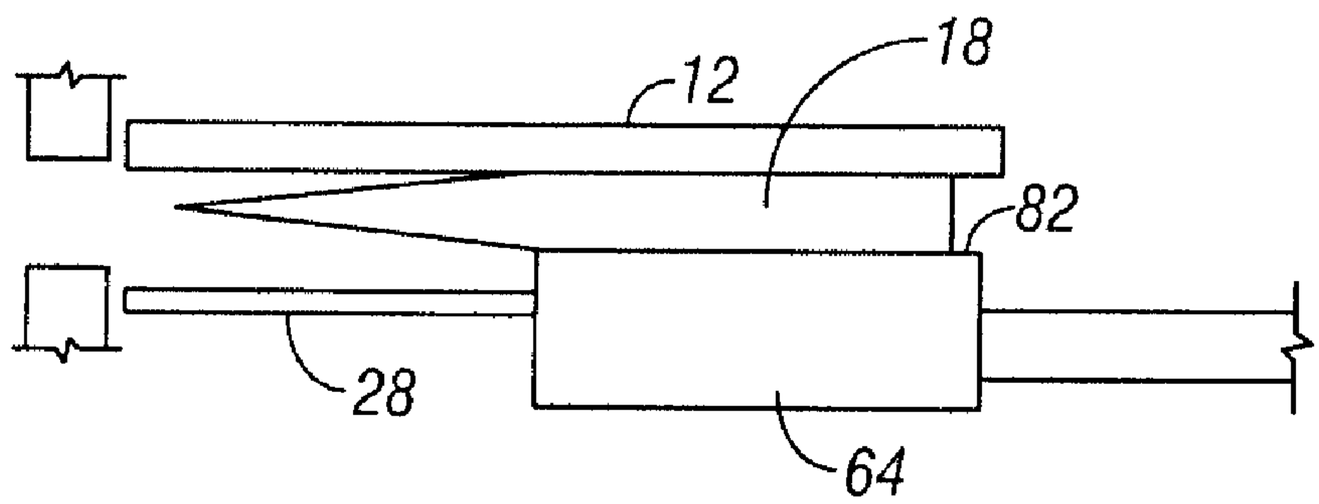

FIG. 7B

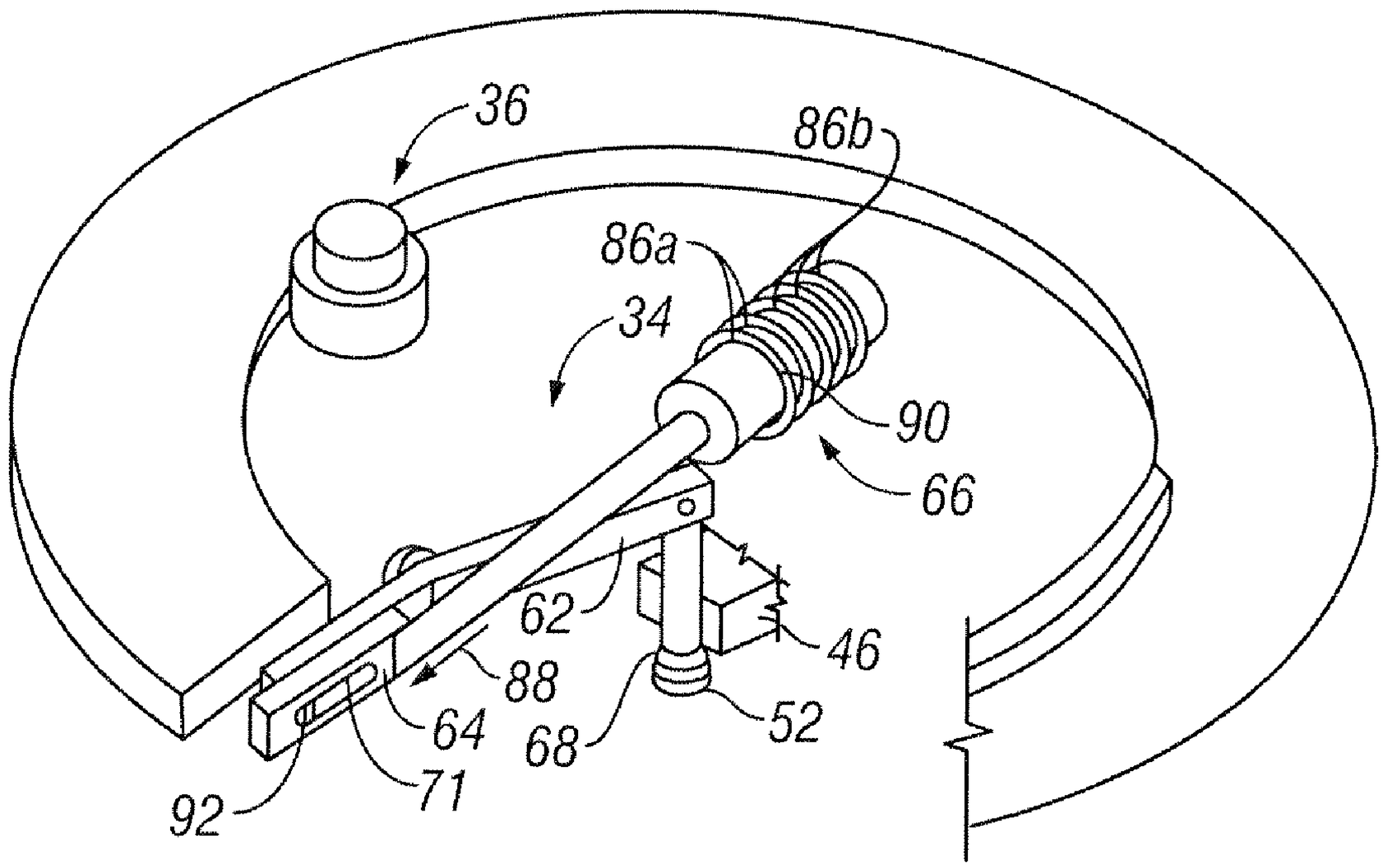
36
86b
86a
34
90
66
62
46
88
64
68
52
92
71

FIG. 8A

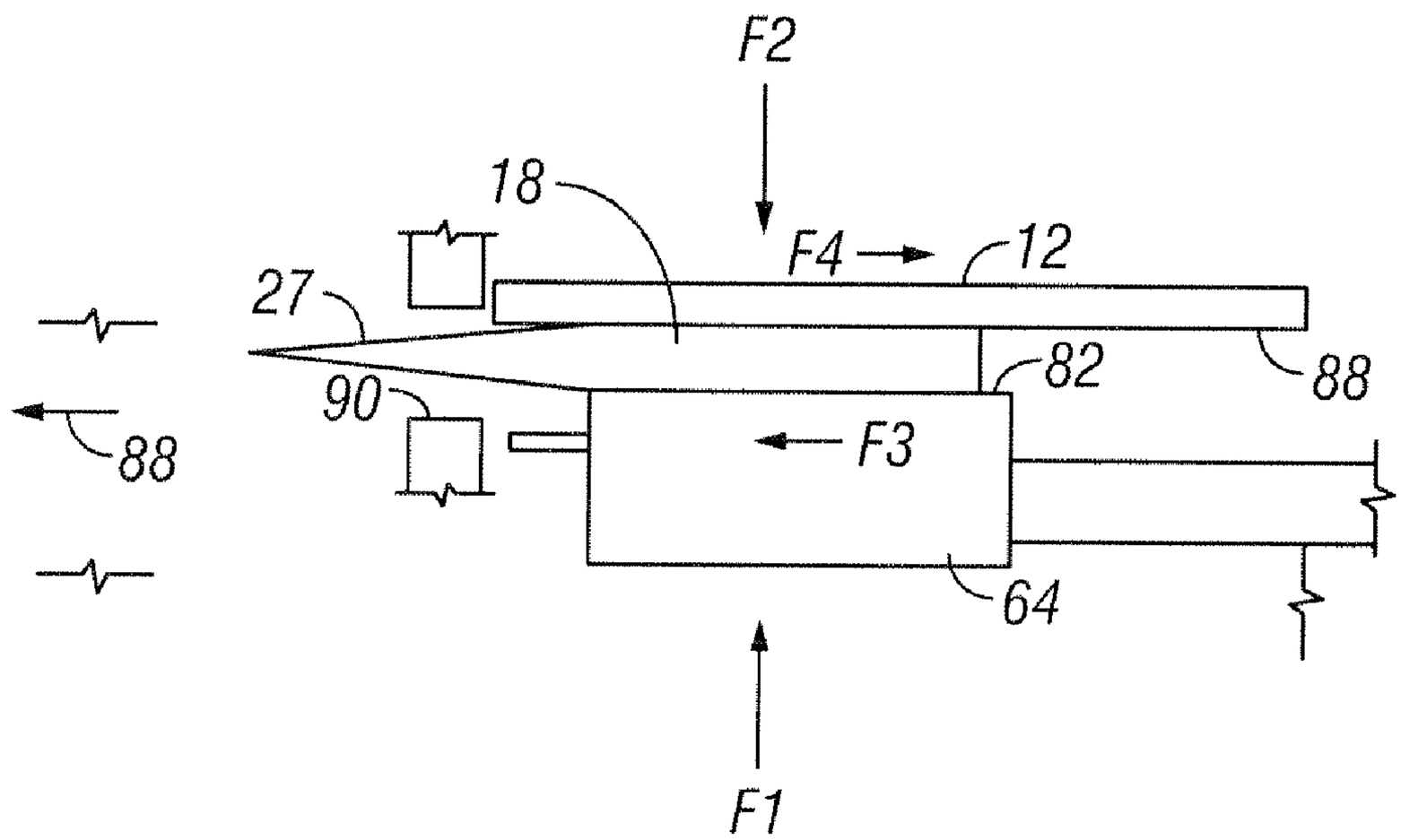
F2
18
F4
12
27
82
88
90
88
F3
64
F1

FIG. 8B

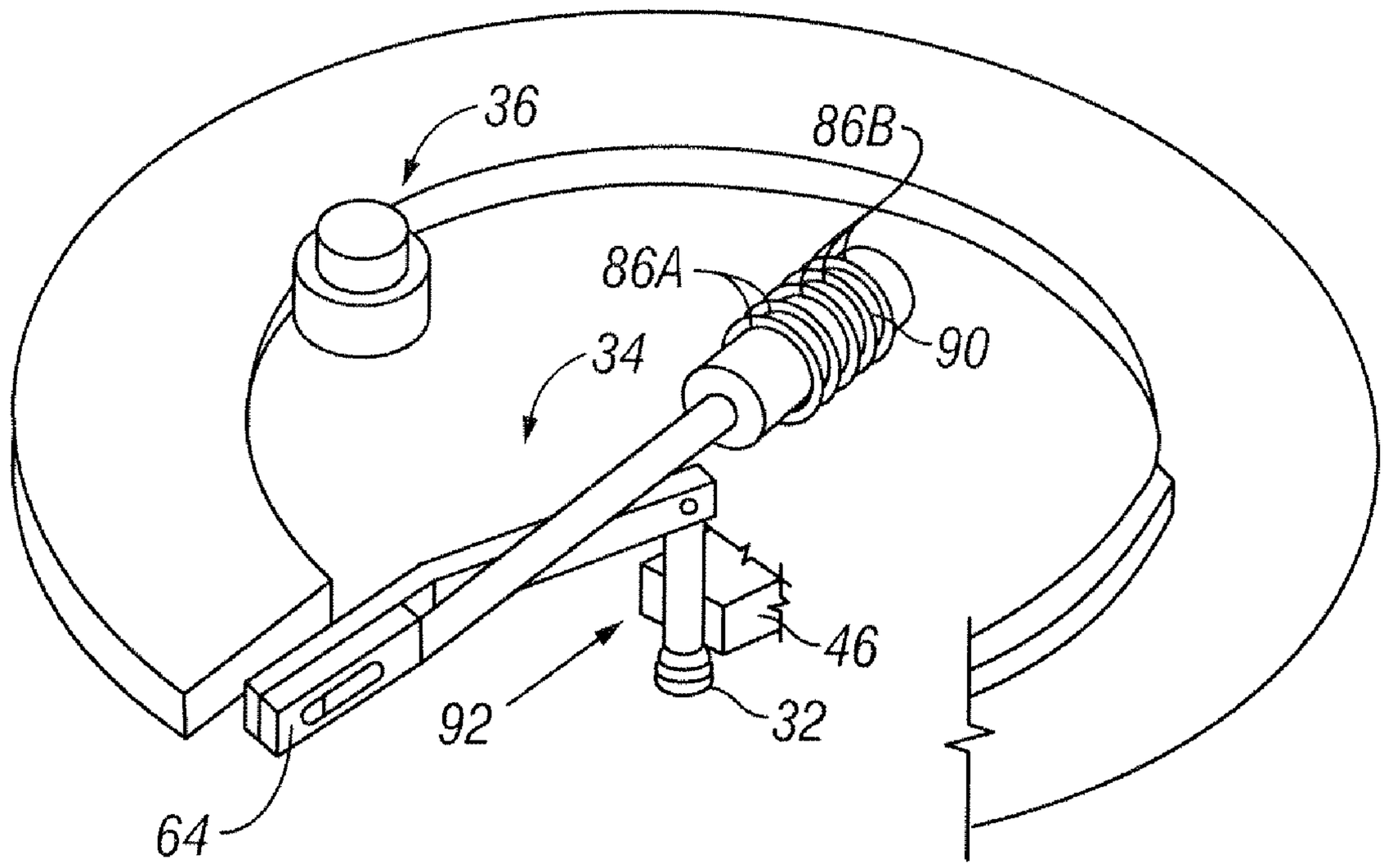

FIG. 9A

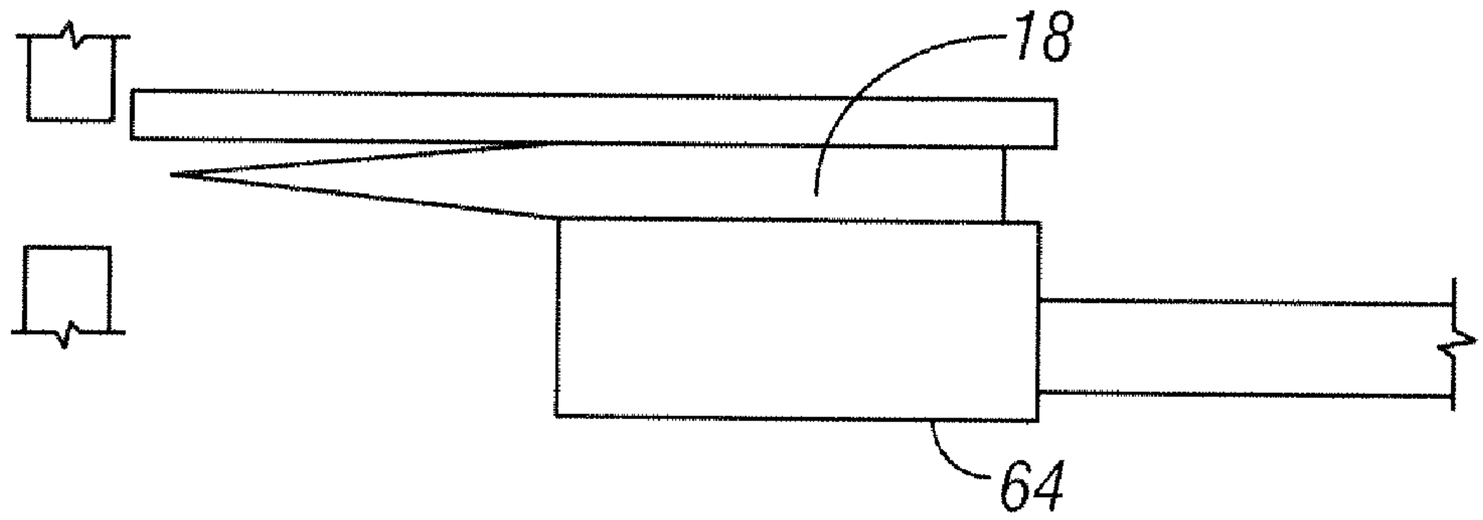

FIG. 9B

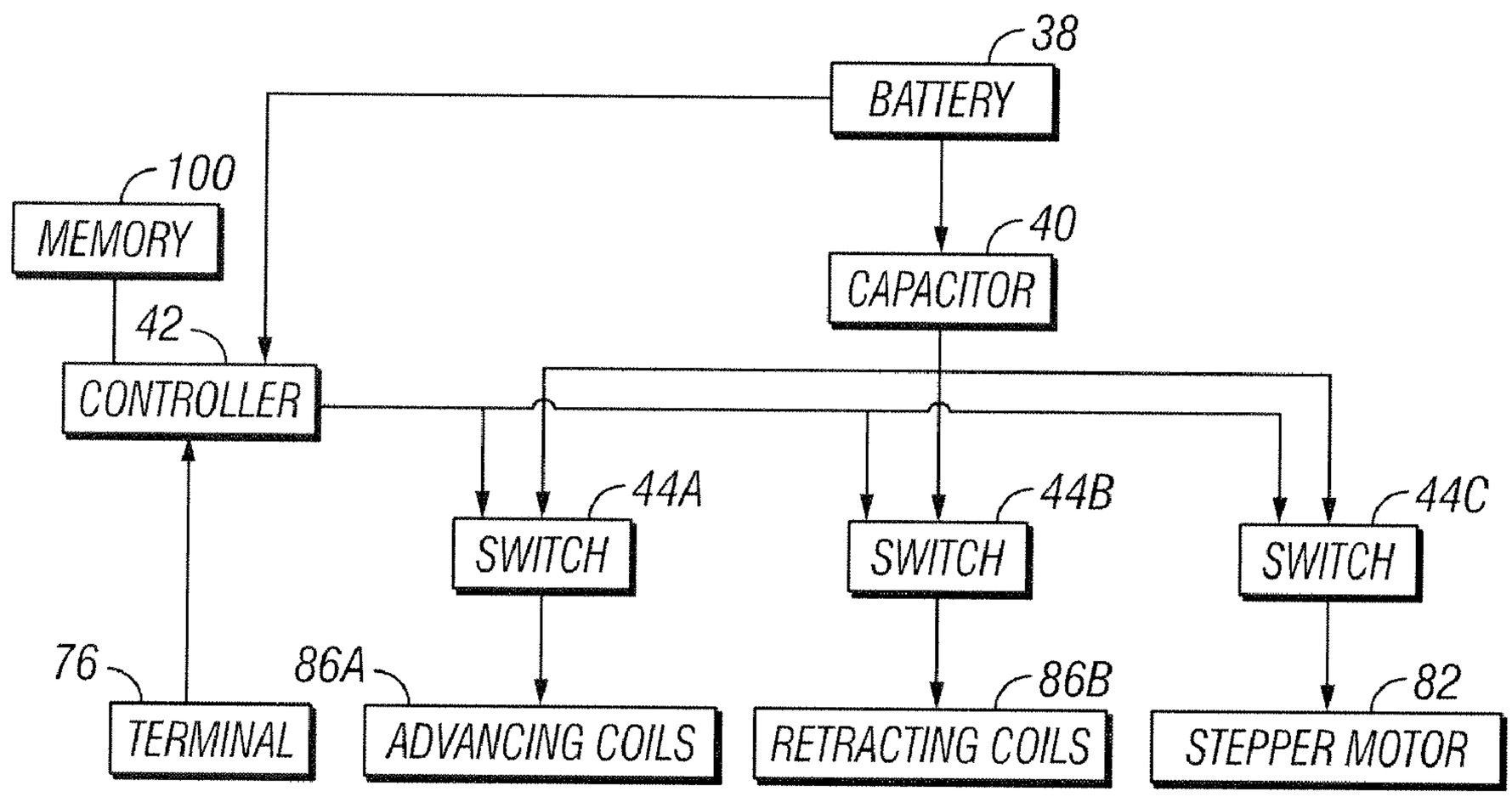
38
BATTERY
100
MEMORY
40
CAPACITOR
42
CONTROLLER
44A
SWITCH
44B
SWITCH
44C
SWITCH
76
TERMINAL
86A
ADVANCING COILS
86B
RETRACTING COILS
82
STEPPER MOTOR

FIG. 10

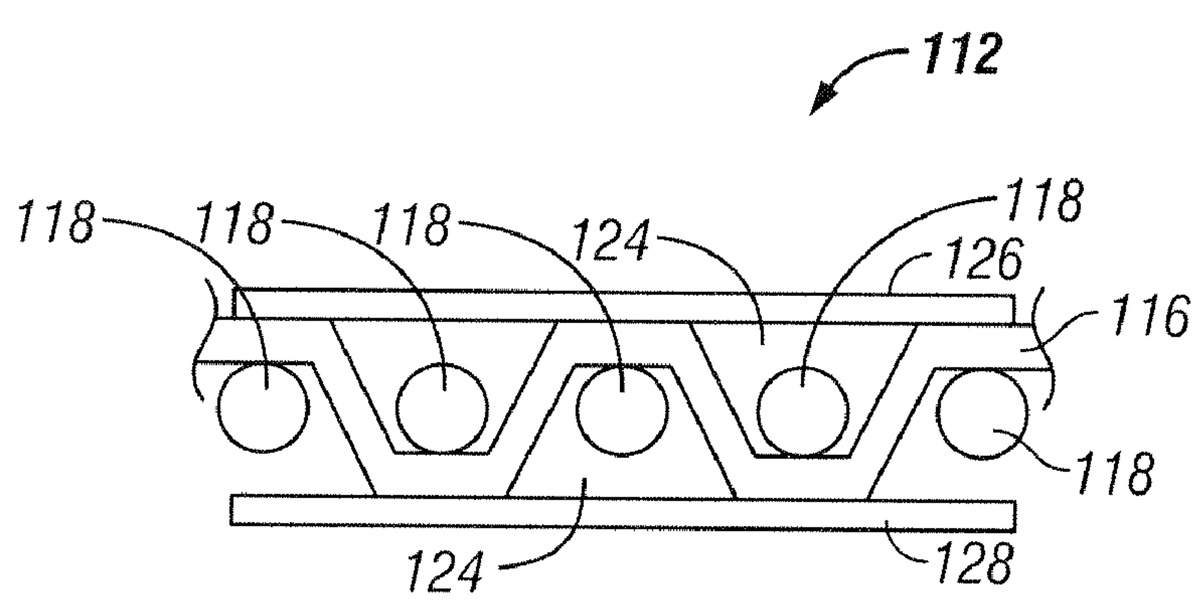
112
118
118
118
124
118
126
116
118
124
128

FIG. 11

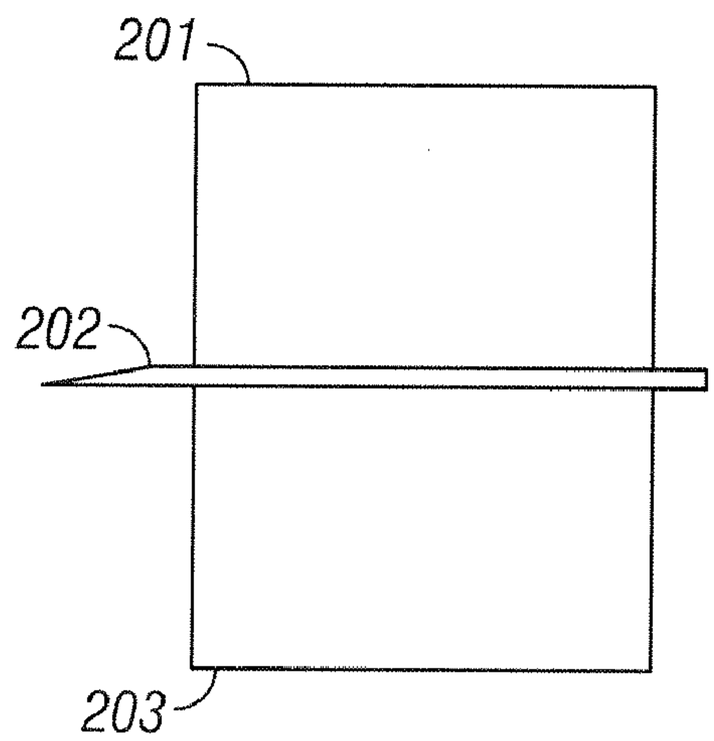

FIG. 12

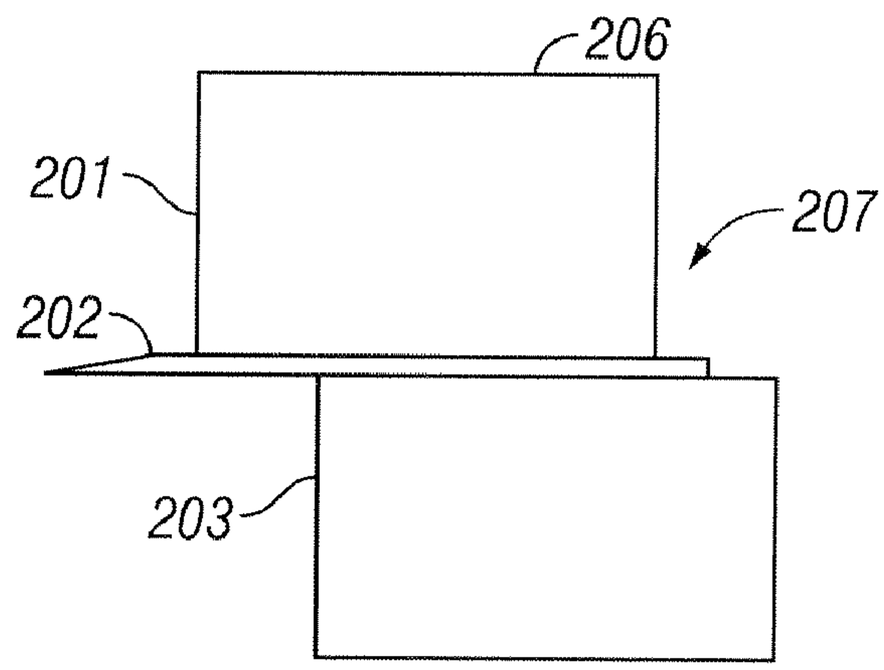

FIG. 13

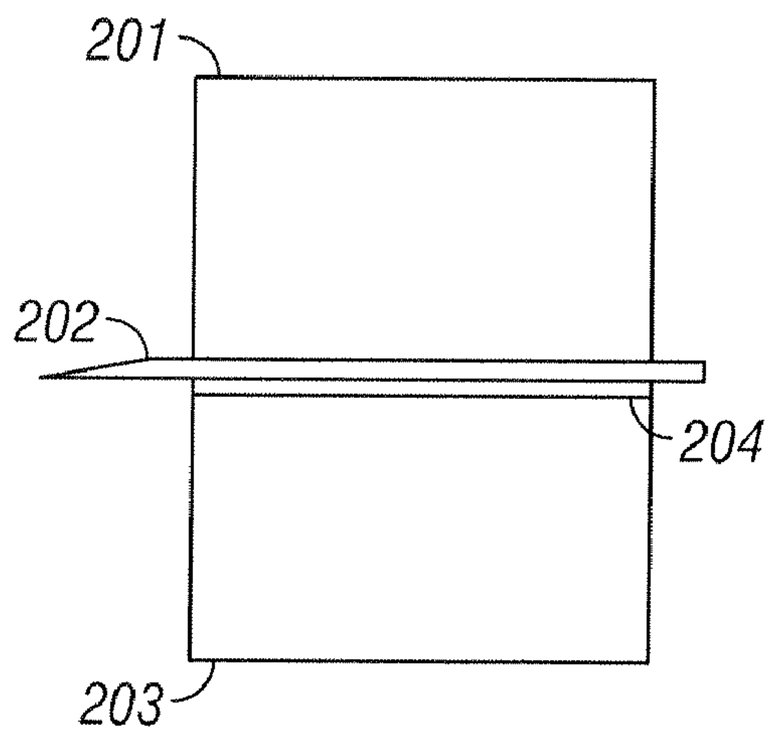

FIG. 14

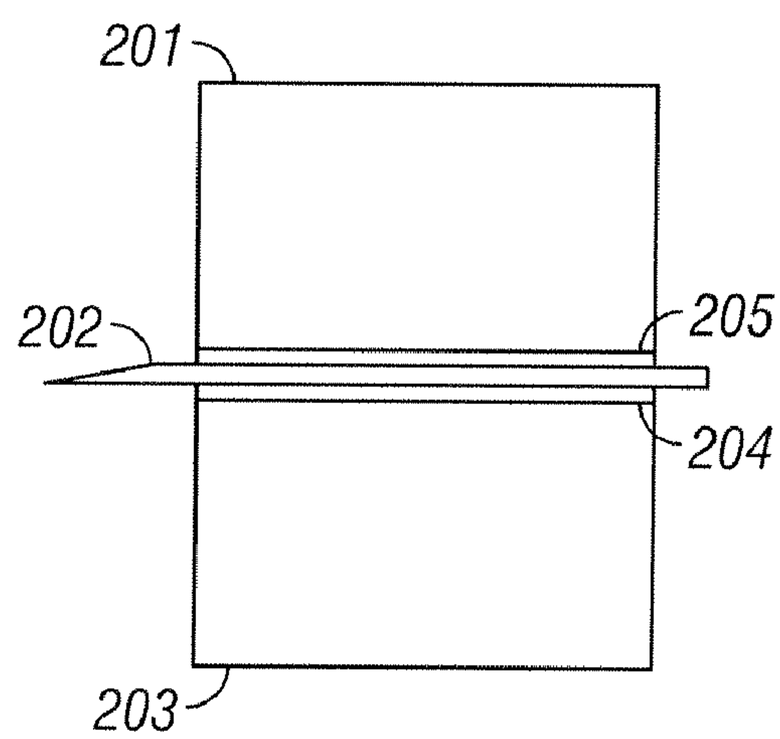

FIG. 15

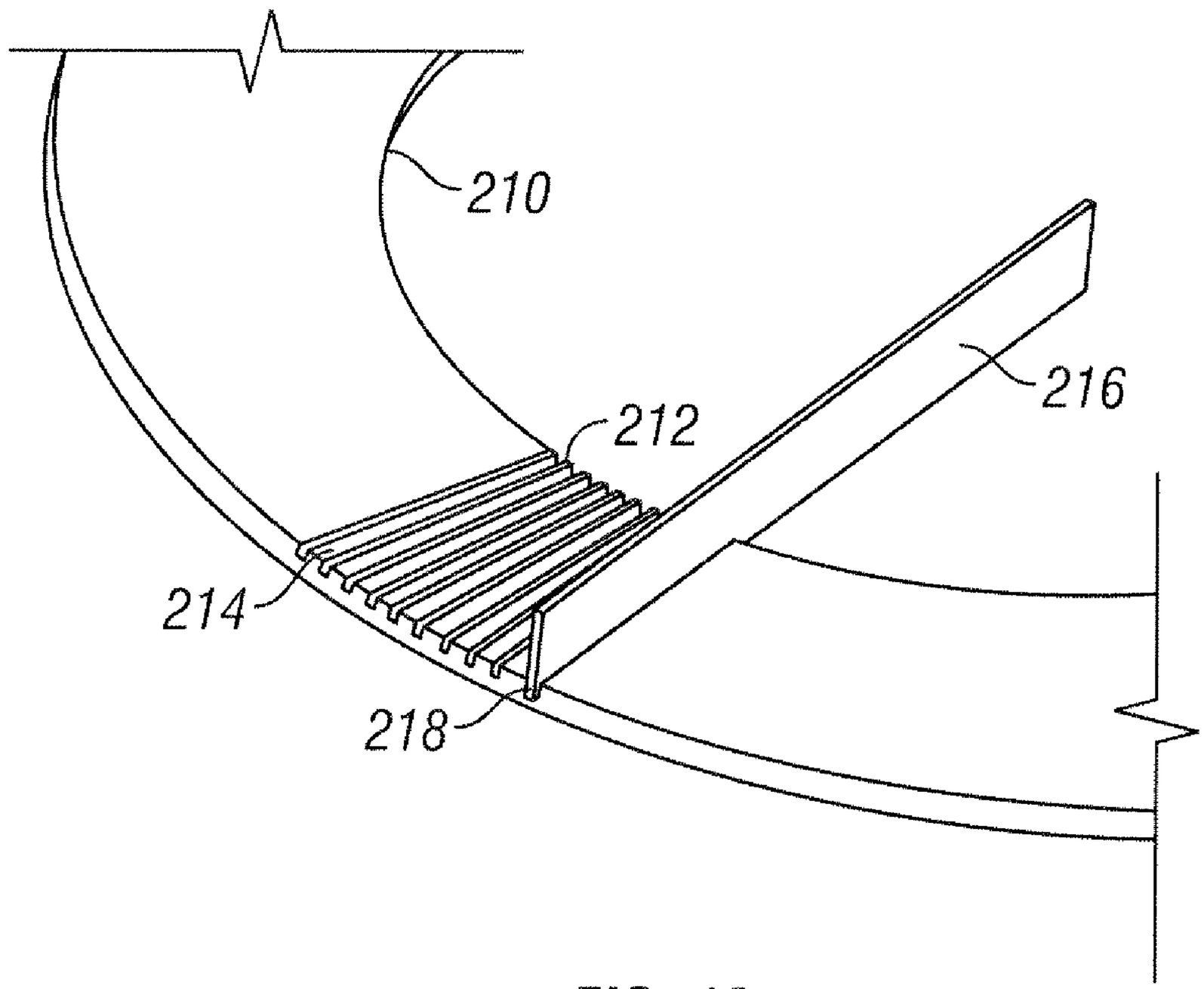

FIG. 16

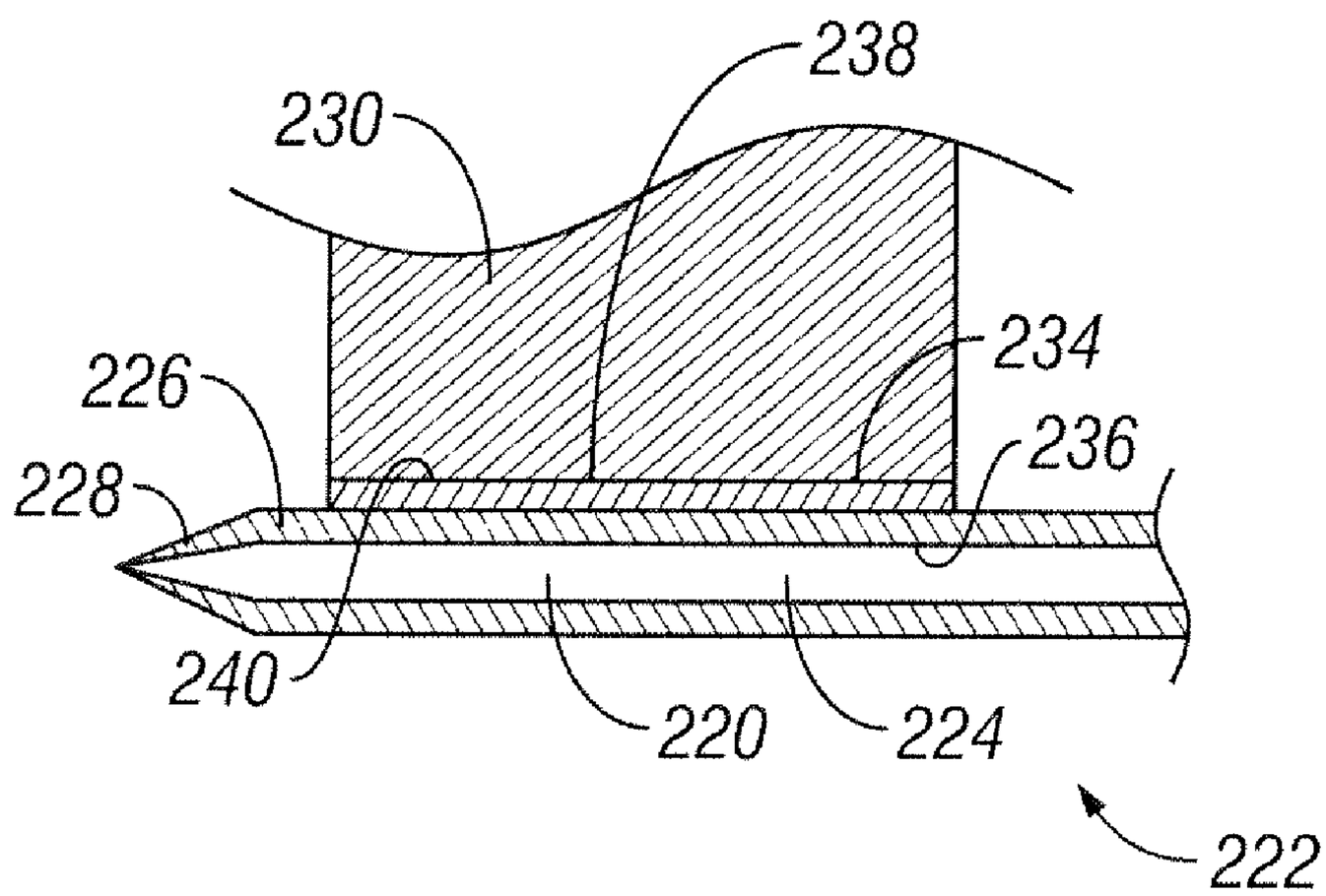

FIG. 17

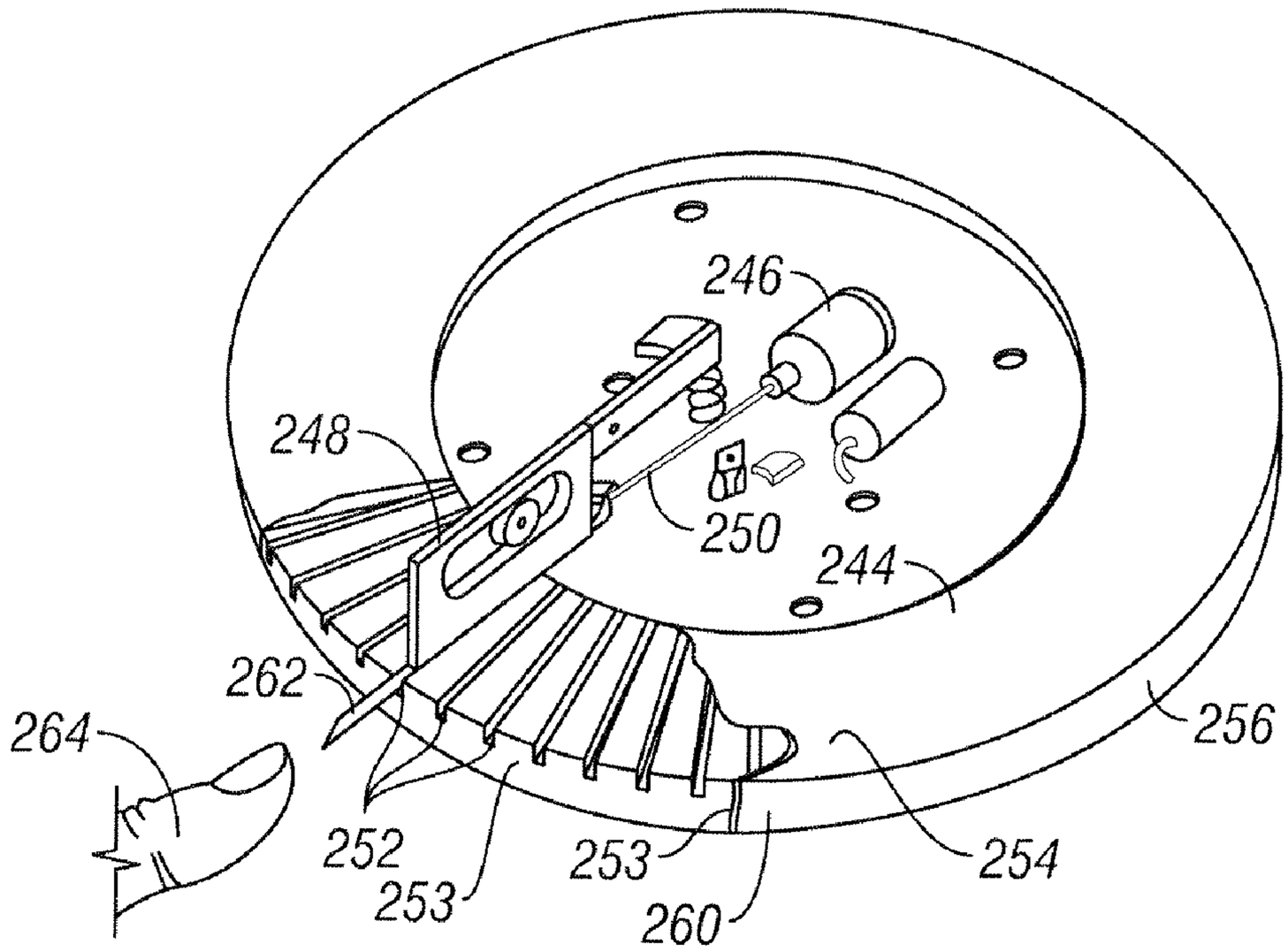

FIG. 18

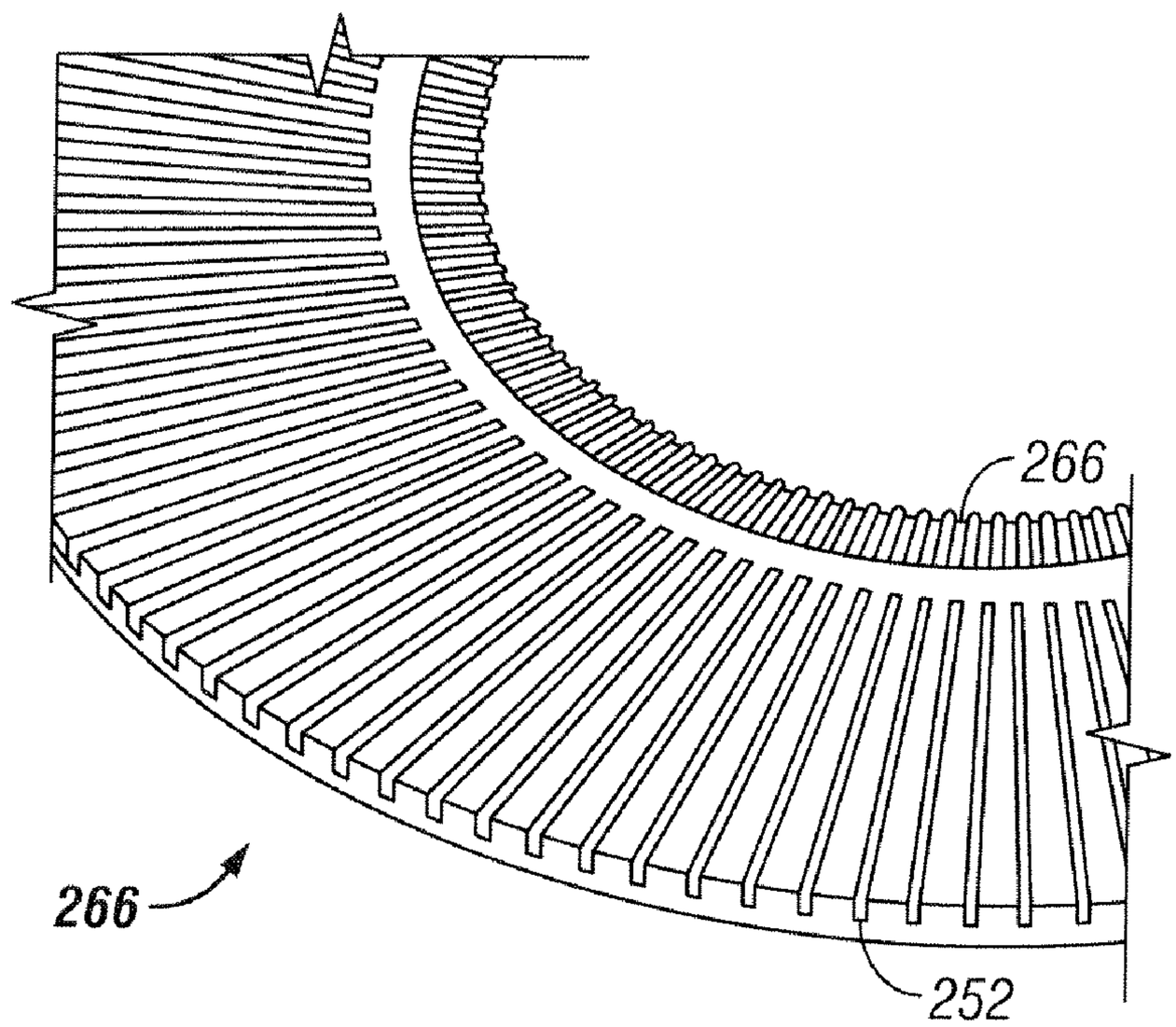

FIG. 19

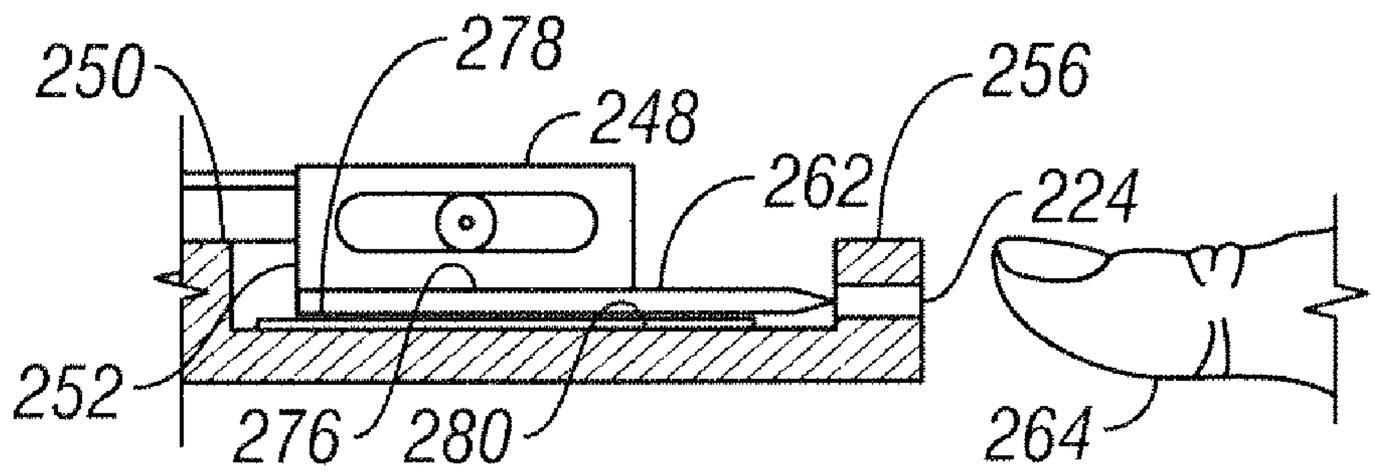

FIG. 20

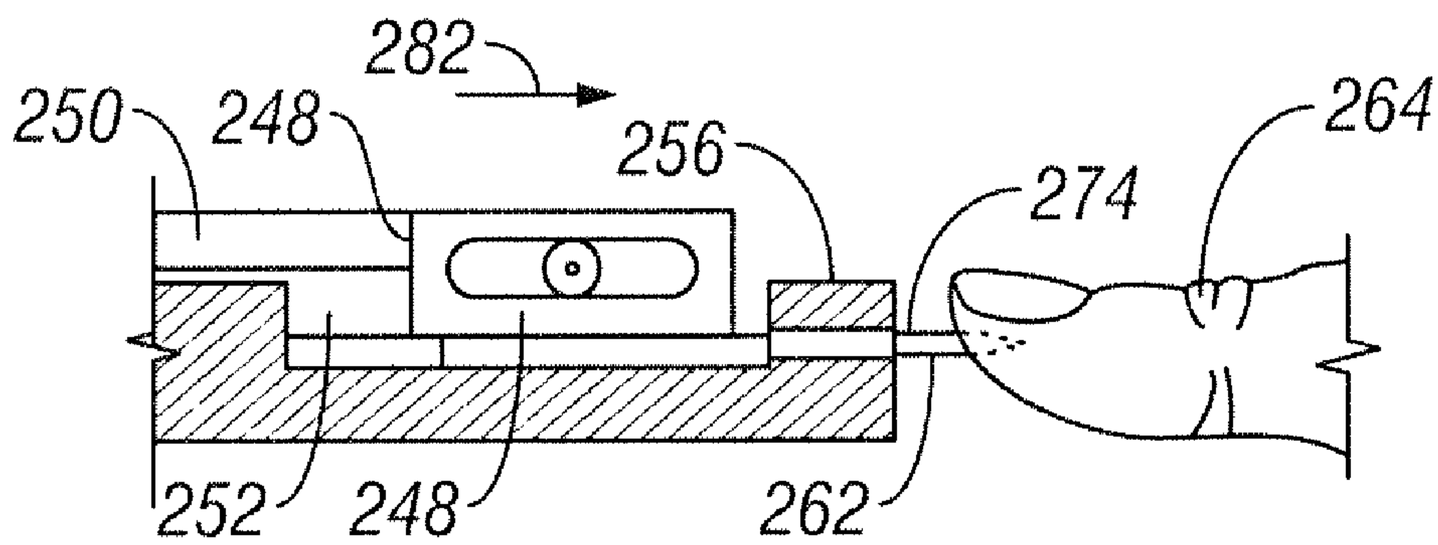

FIG. 21

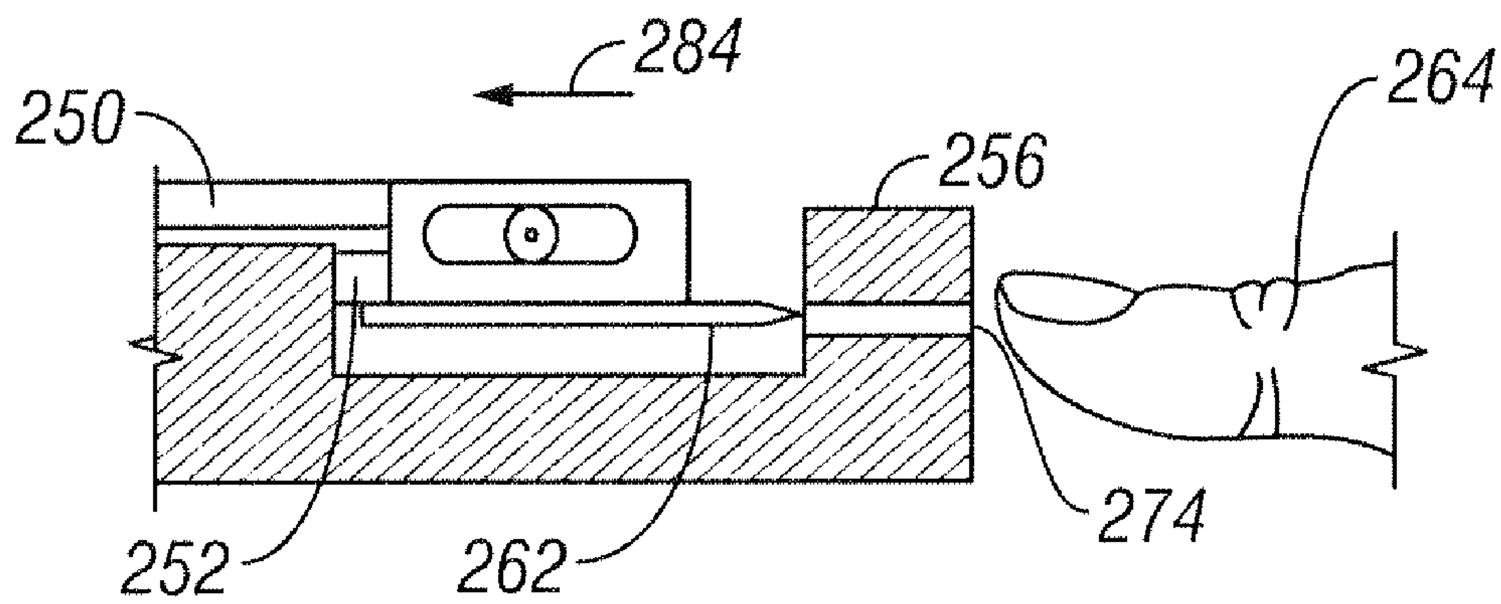

FIG. 22

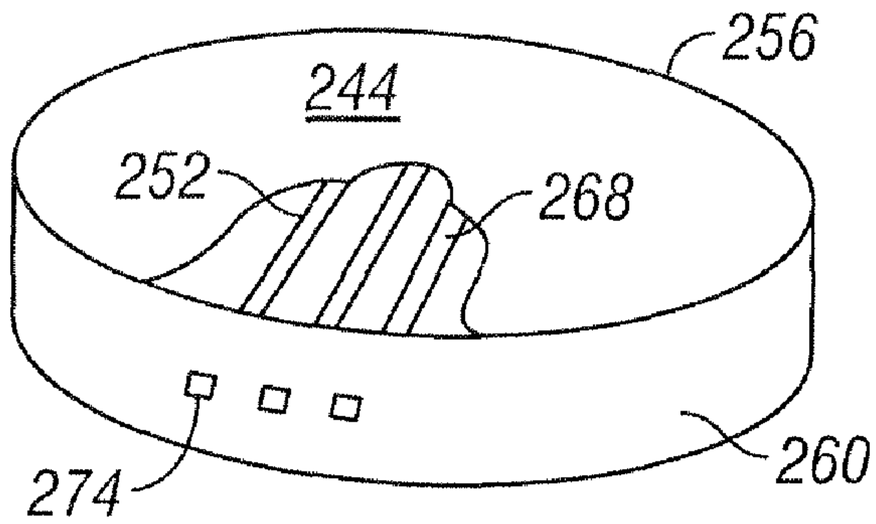

FIG. 23

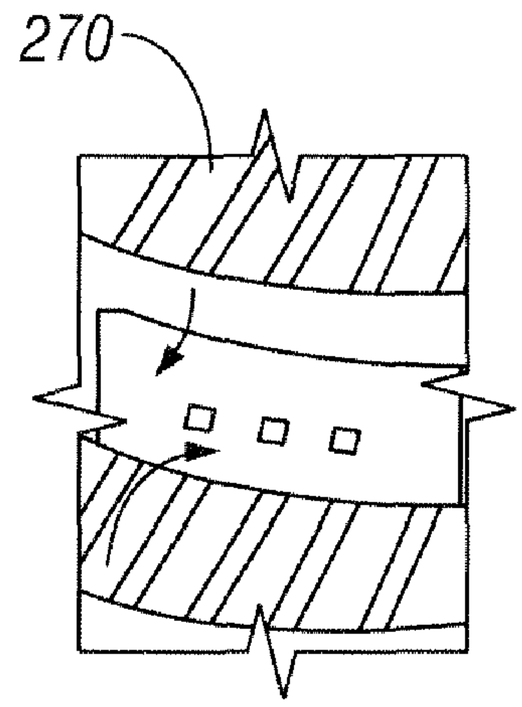

FIG. 24

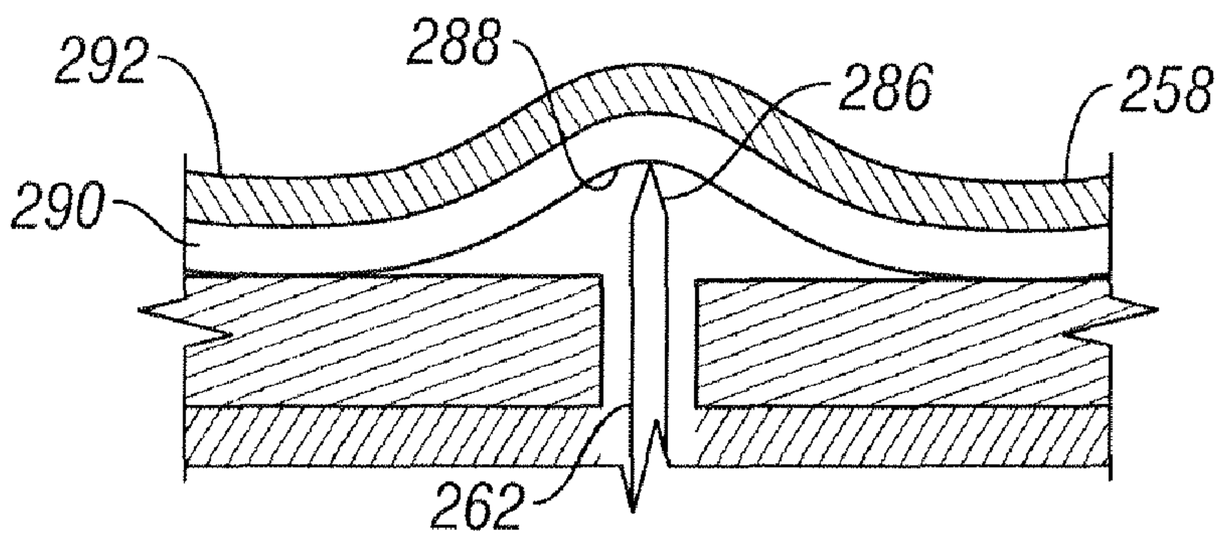

FIG. 25

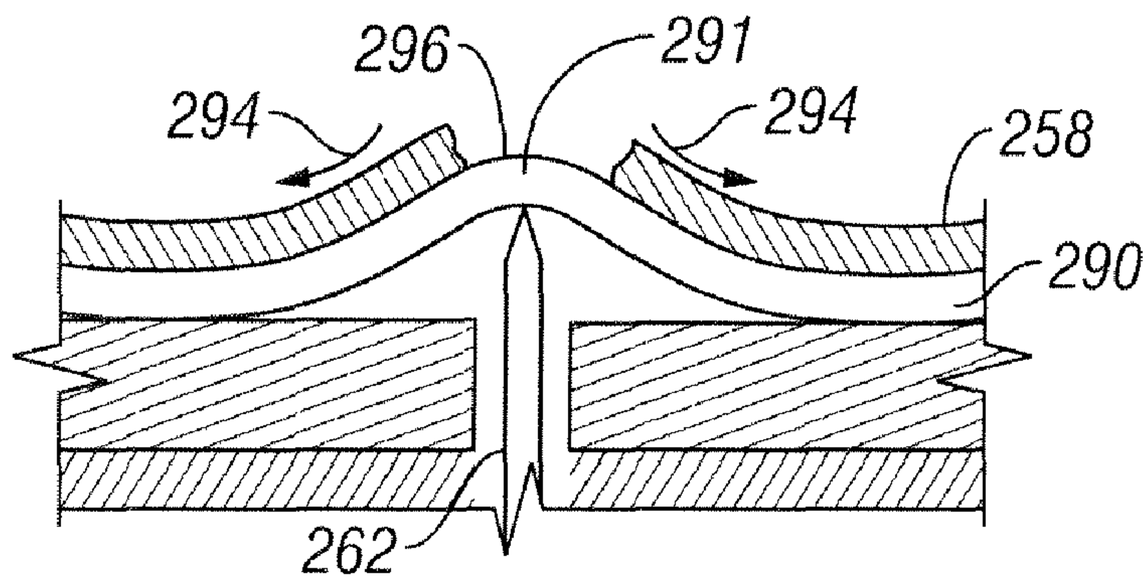

FIG. 26

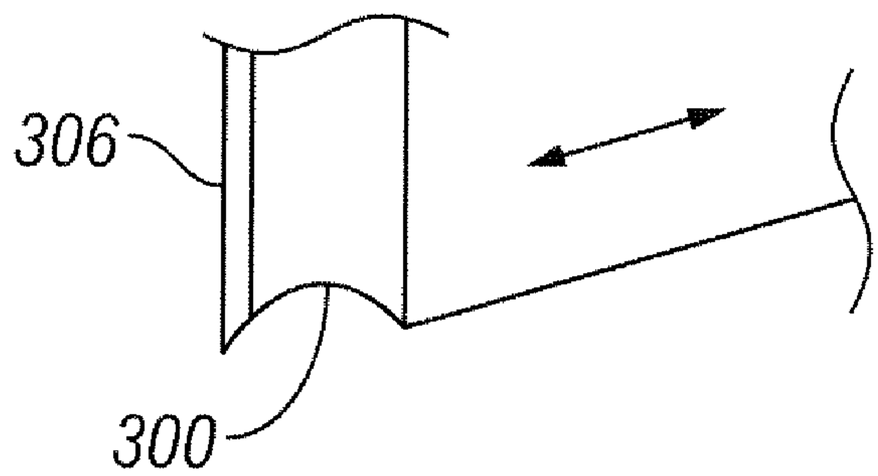

FIG. 27

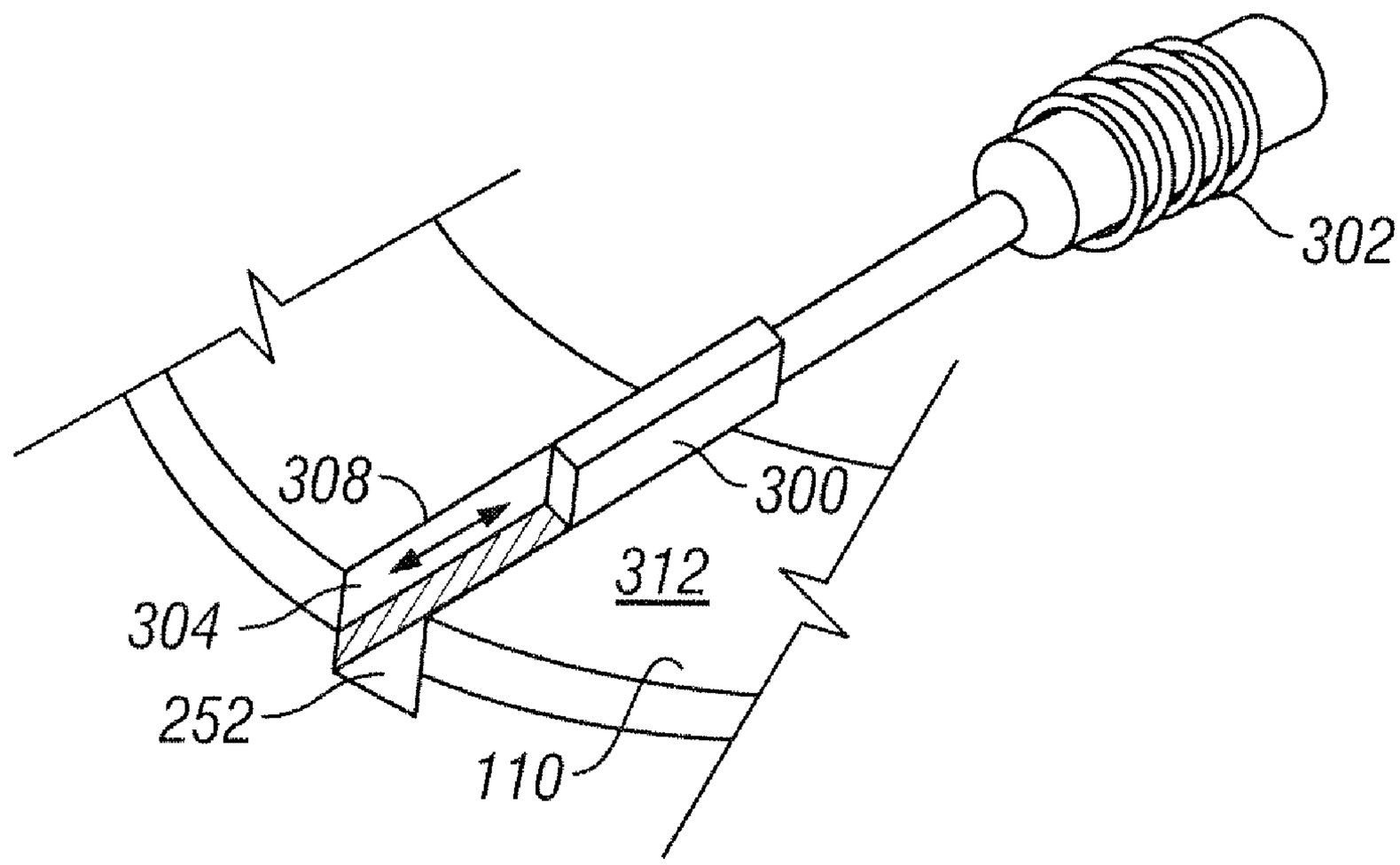

FIG.28

FIG. 29

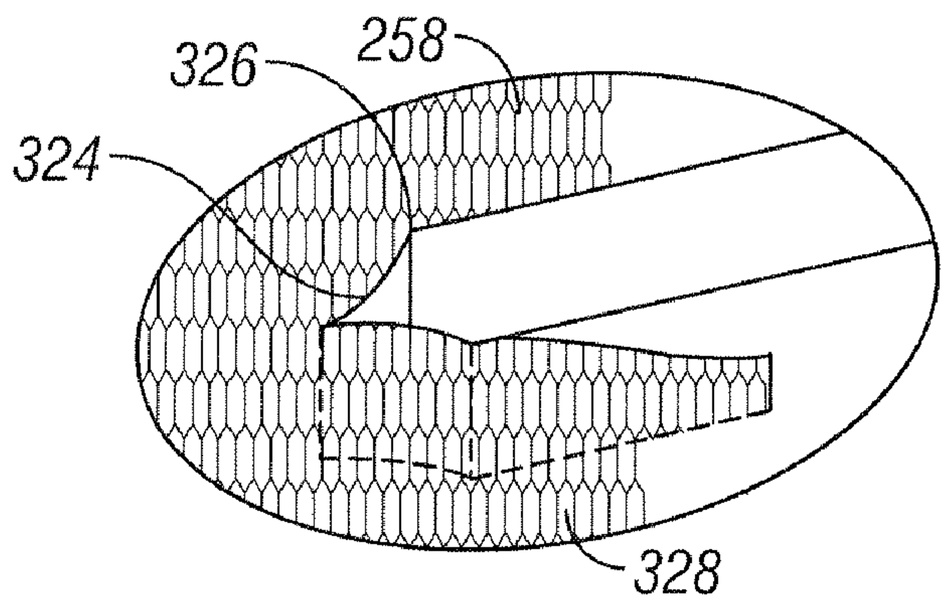

FIG. 30

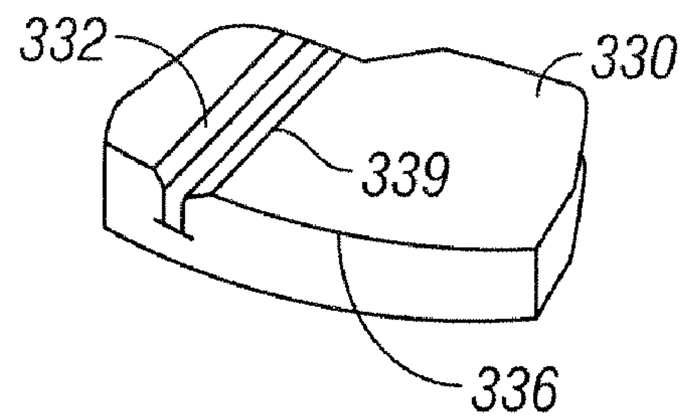

FIG. 31

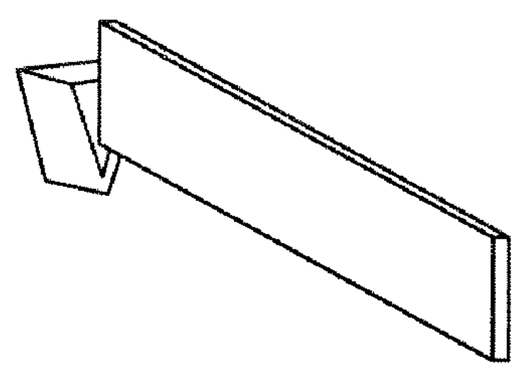

FIG. 32

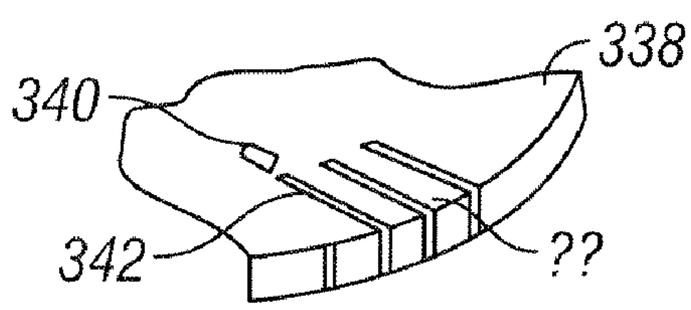

FIG. 33

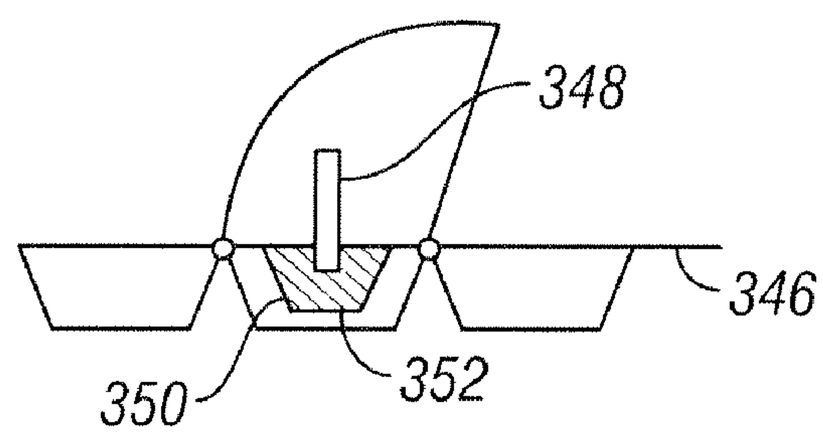

FIG. 34

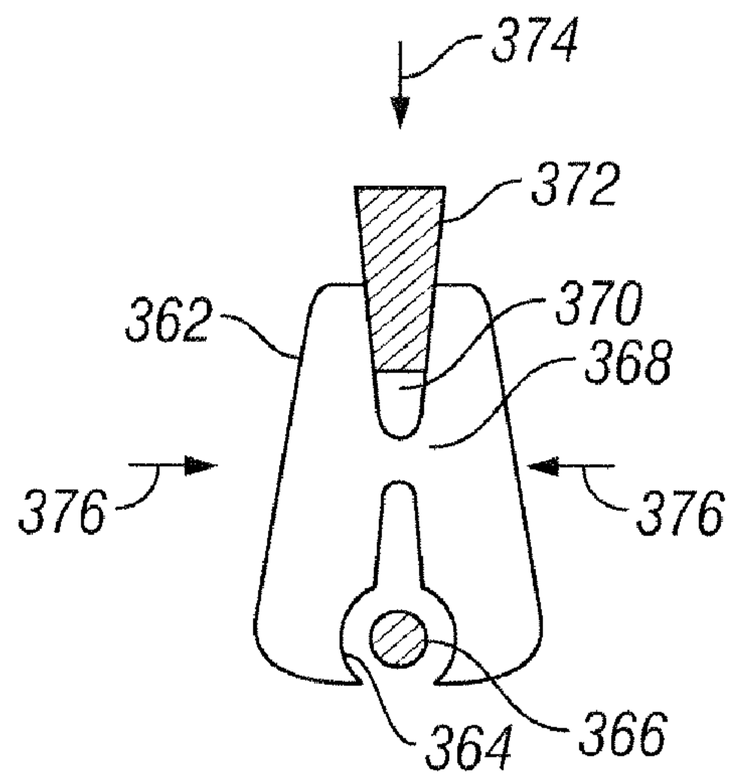

FIG. 35

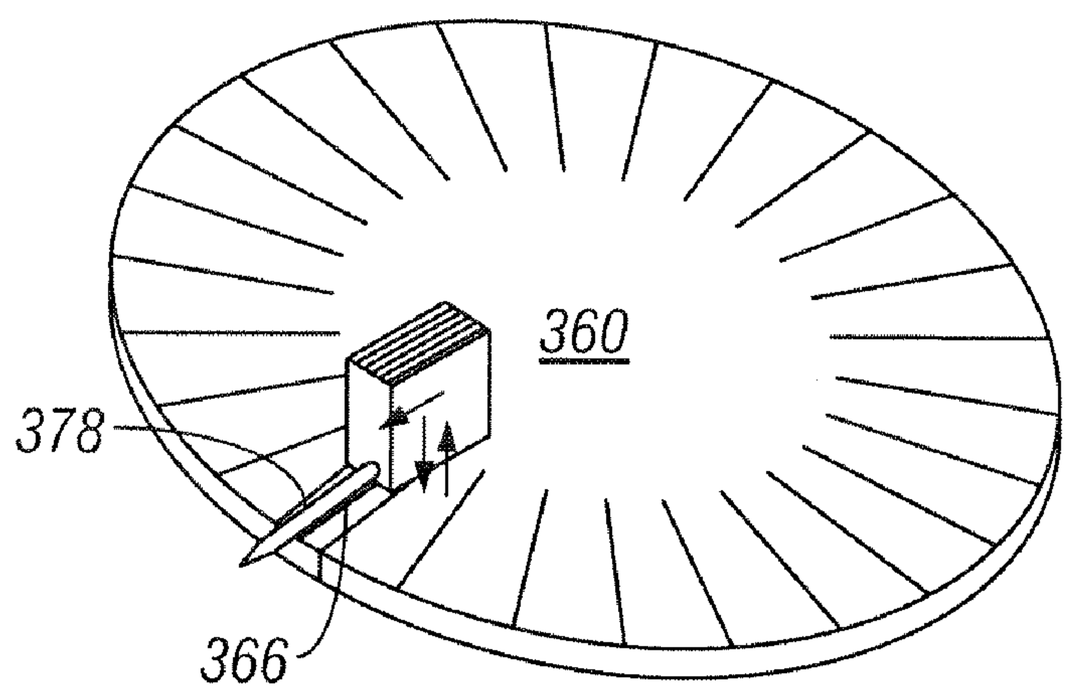

FIG. 36

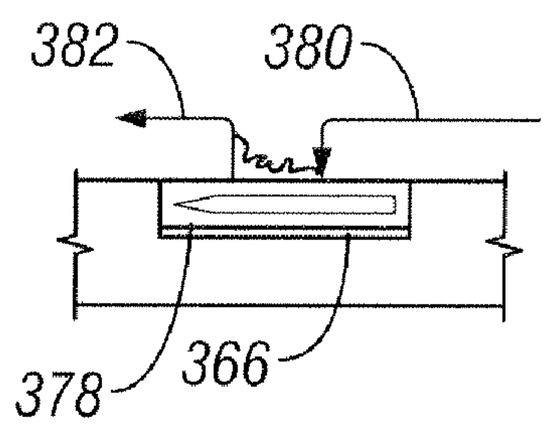

FIG. 37

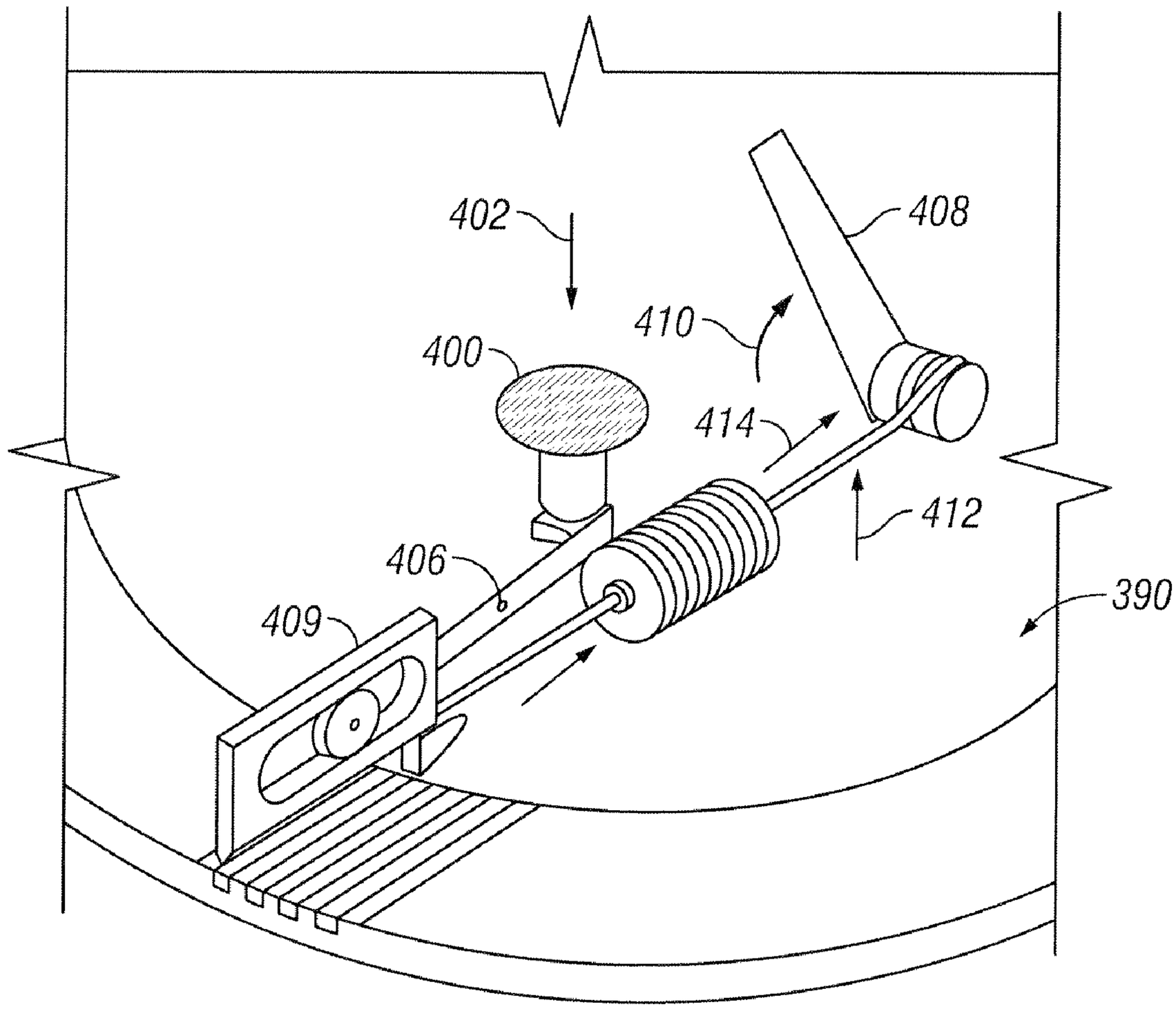

FIG. 38

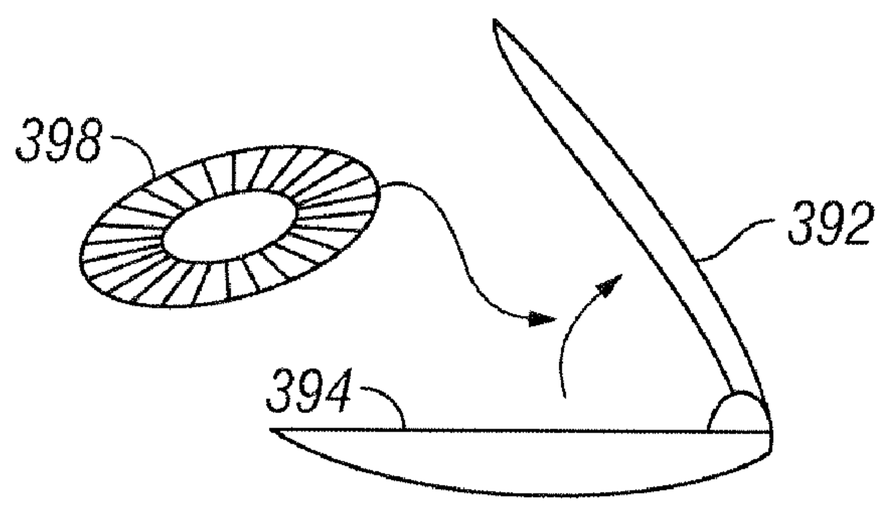

FIG. 39

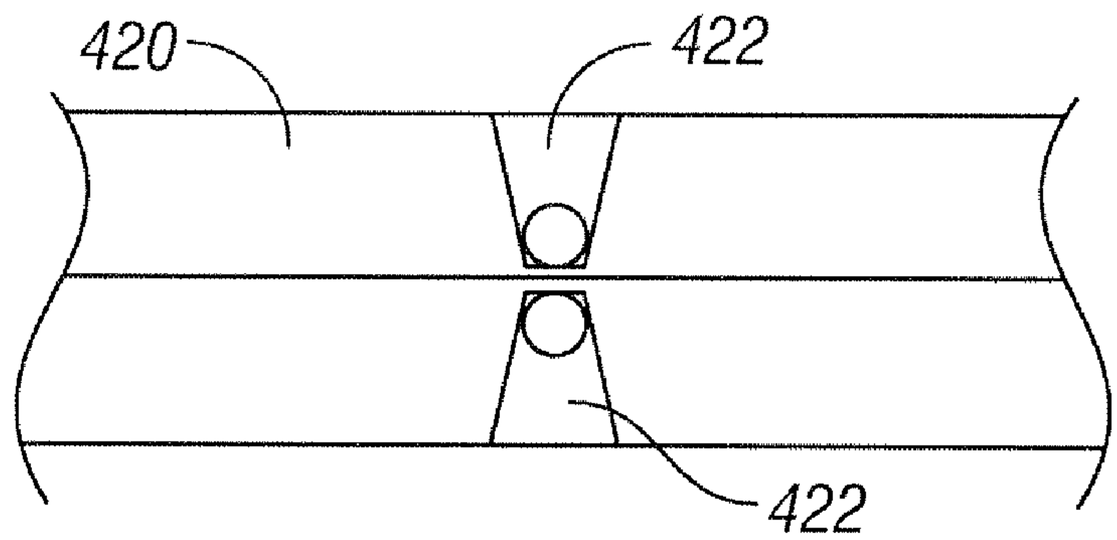

FIG. 40

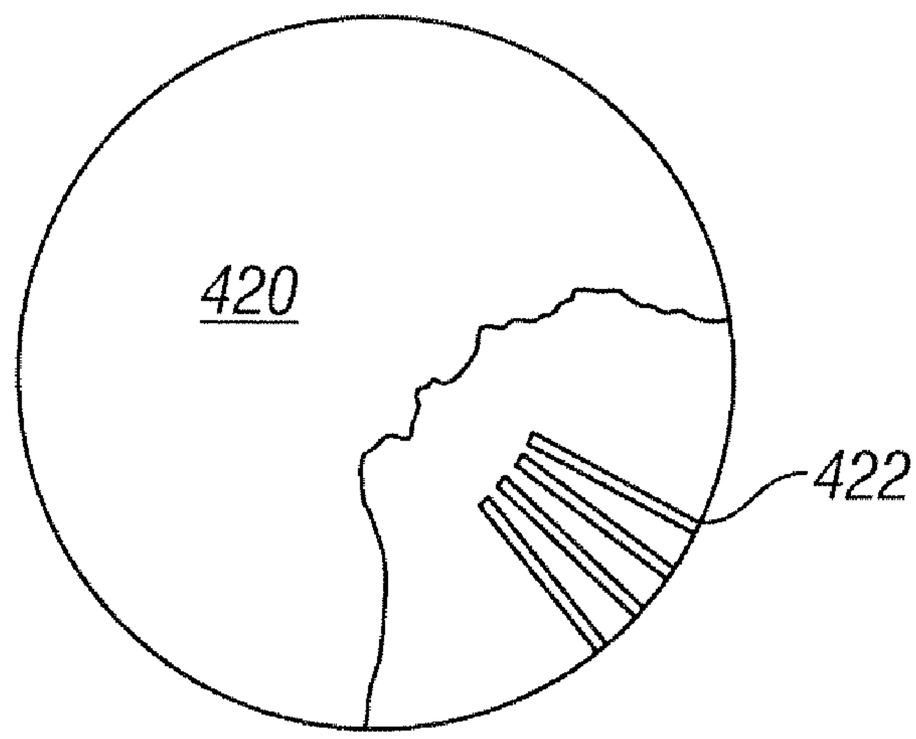

FIG. 41

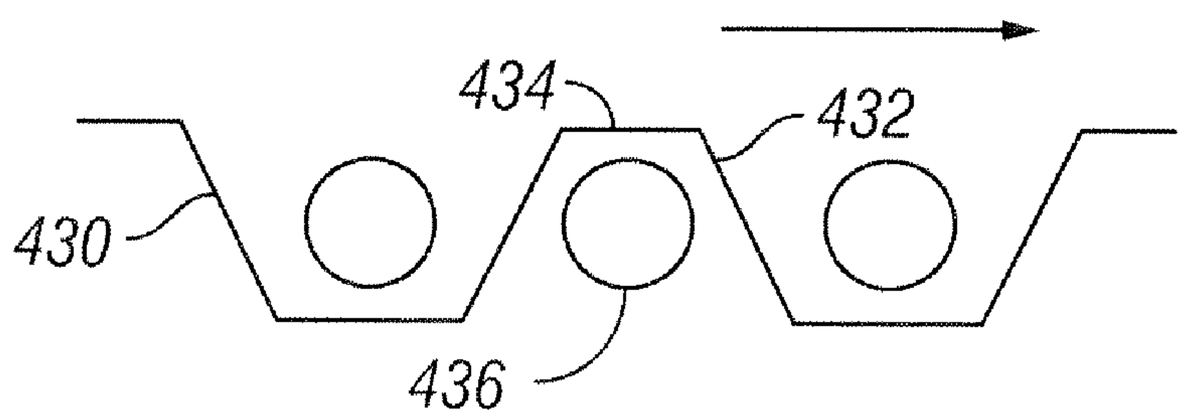

FIG. 42

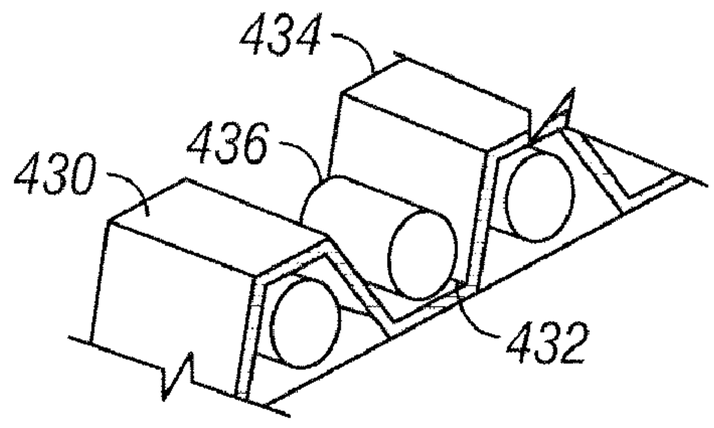

FIG. 43

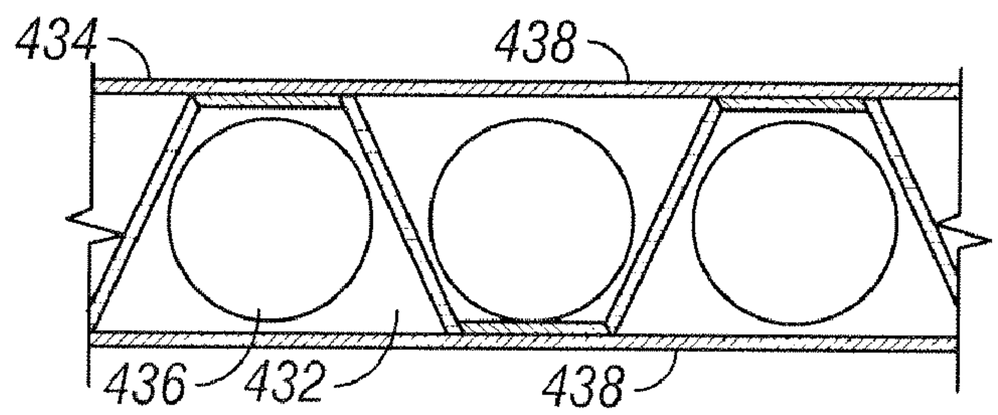

FIG. 44

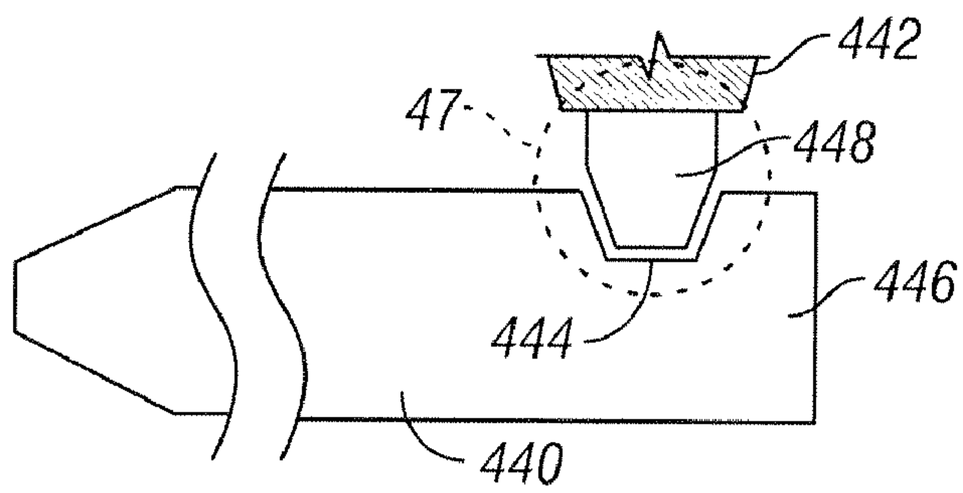

FIG. 45

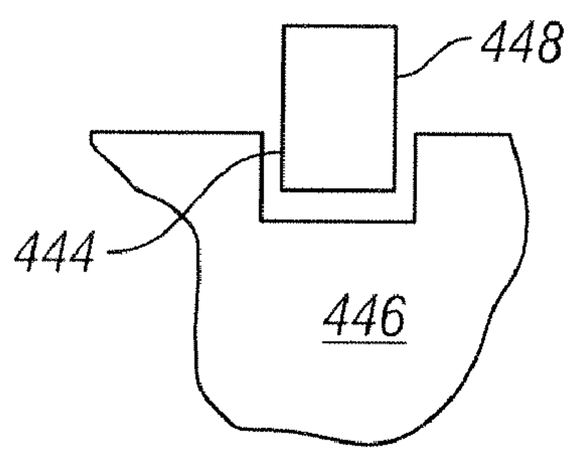

FIG. 46

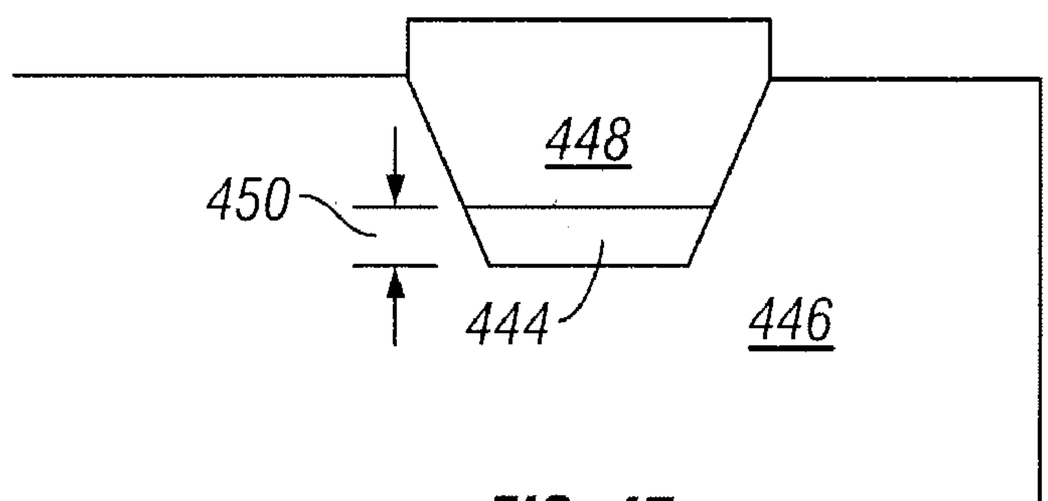

FIG. 47

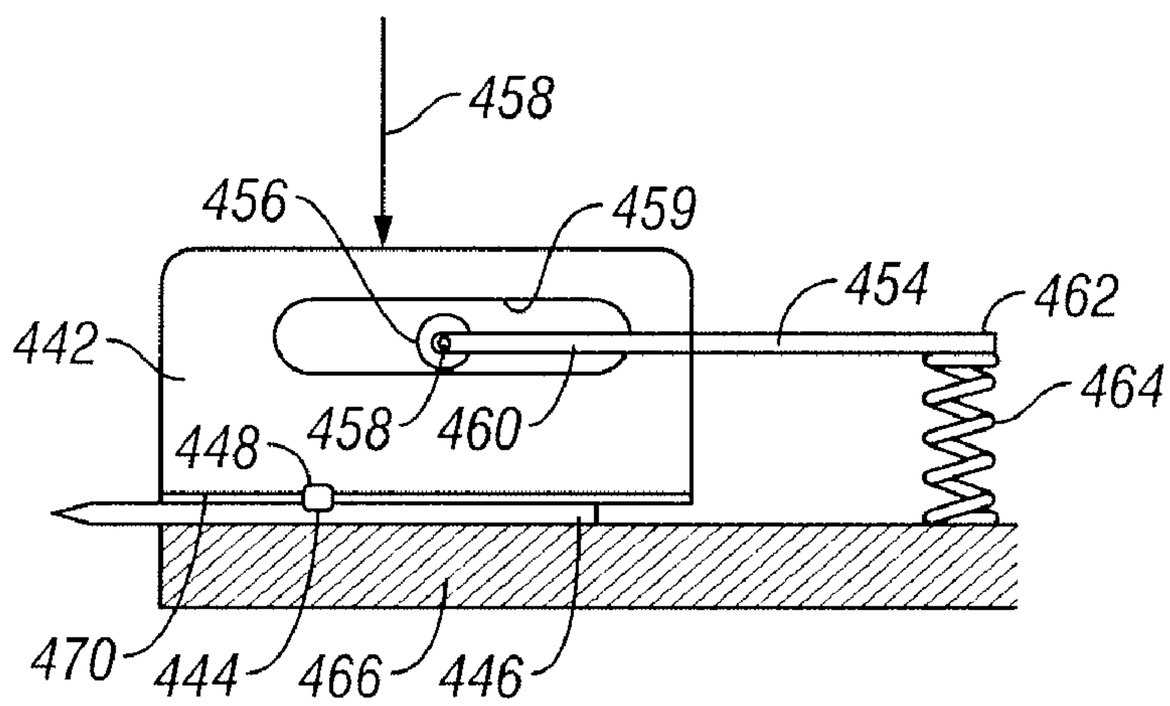

FIG. 48

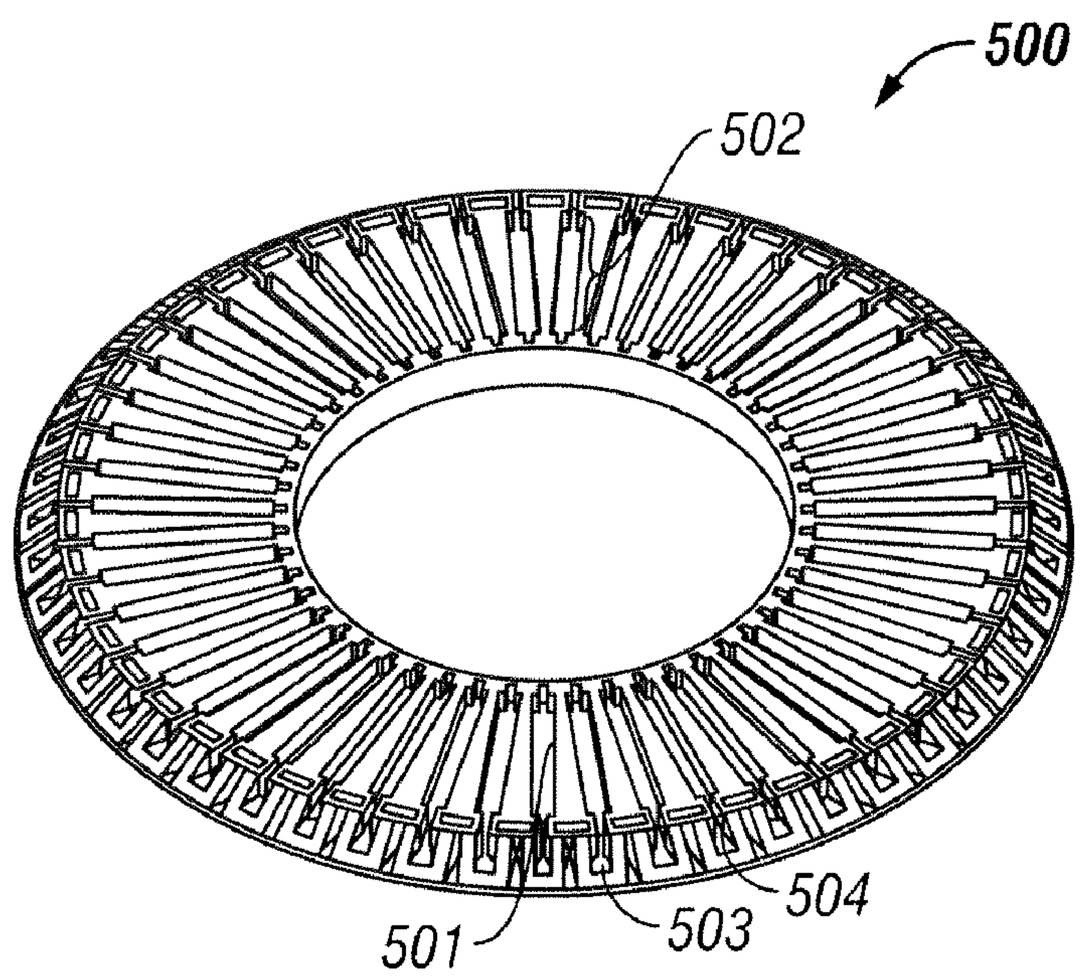

FIG. 49

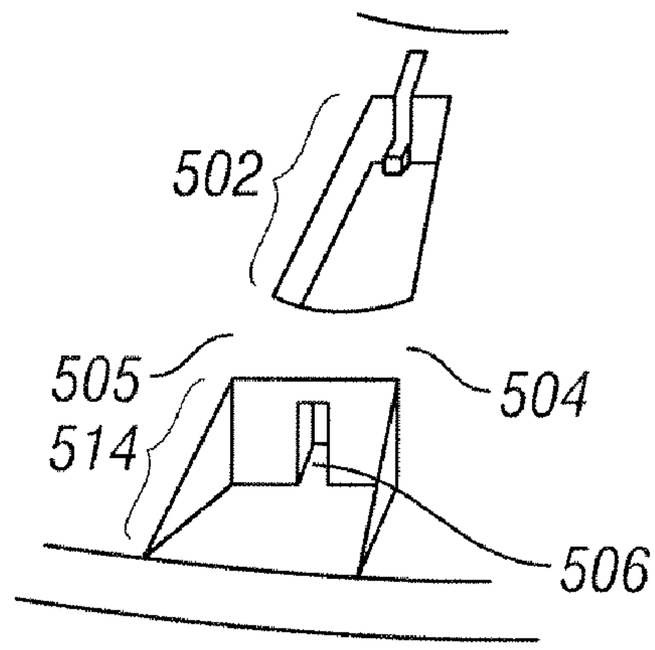

FIG. 50

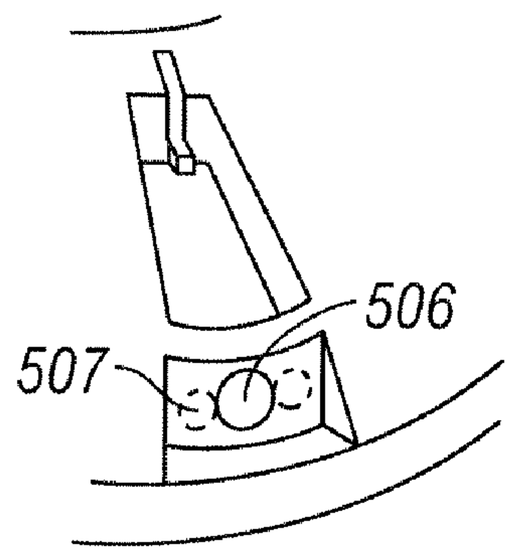

FIG. 51

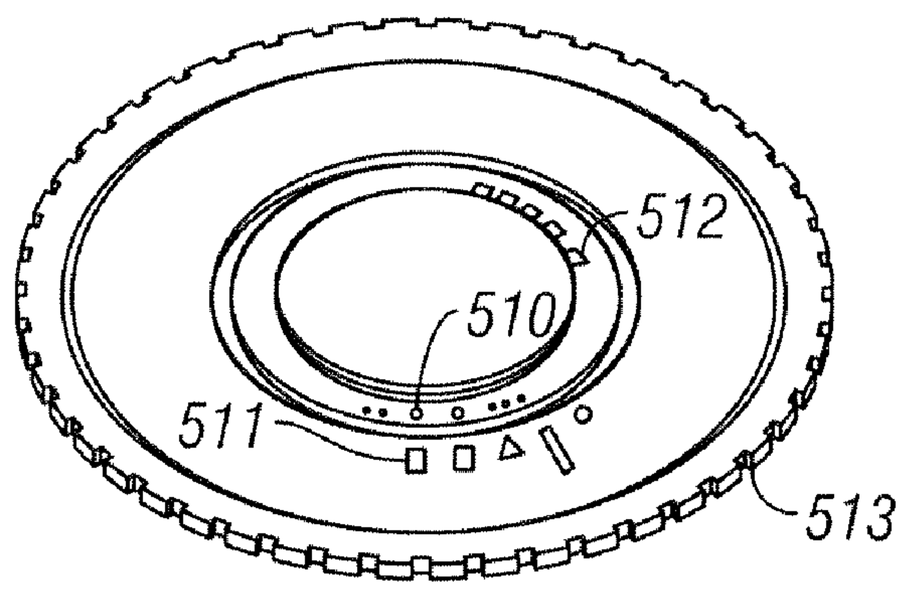

FIG. 52

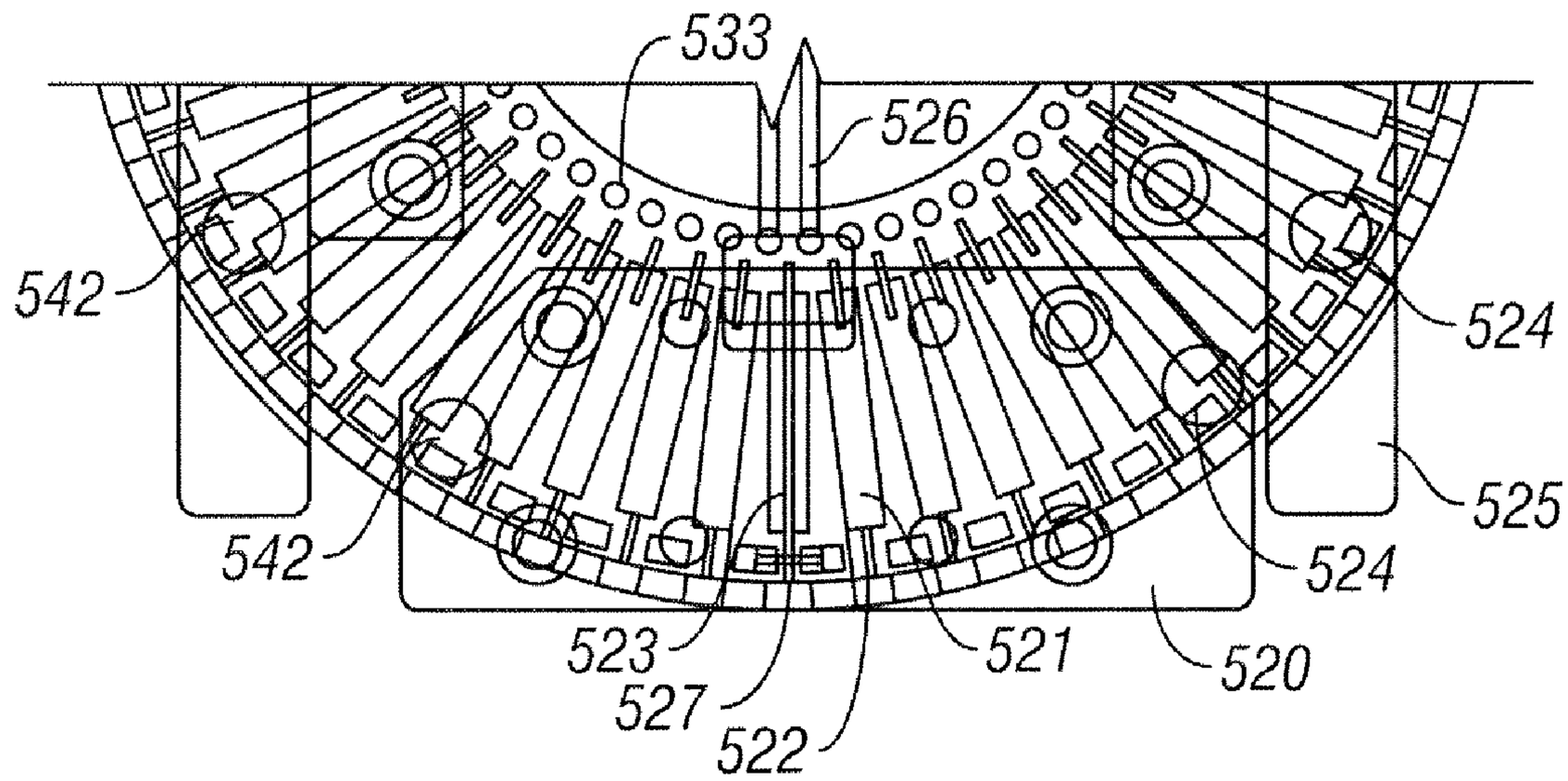

FIG. 53A

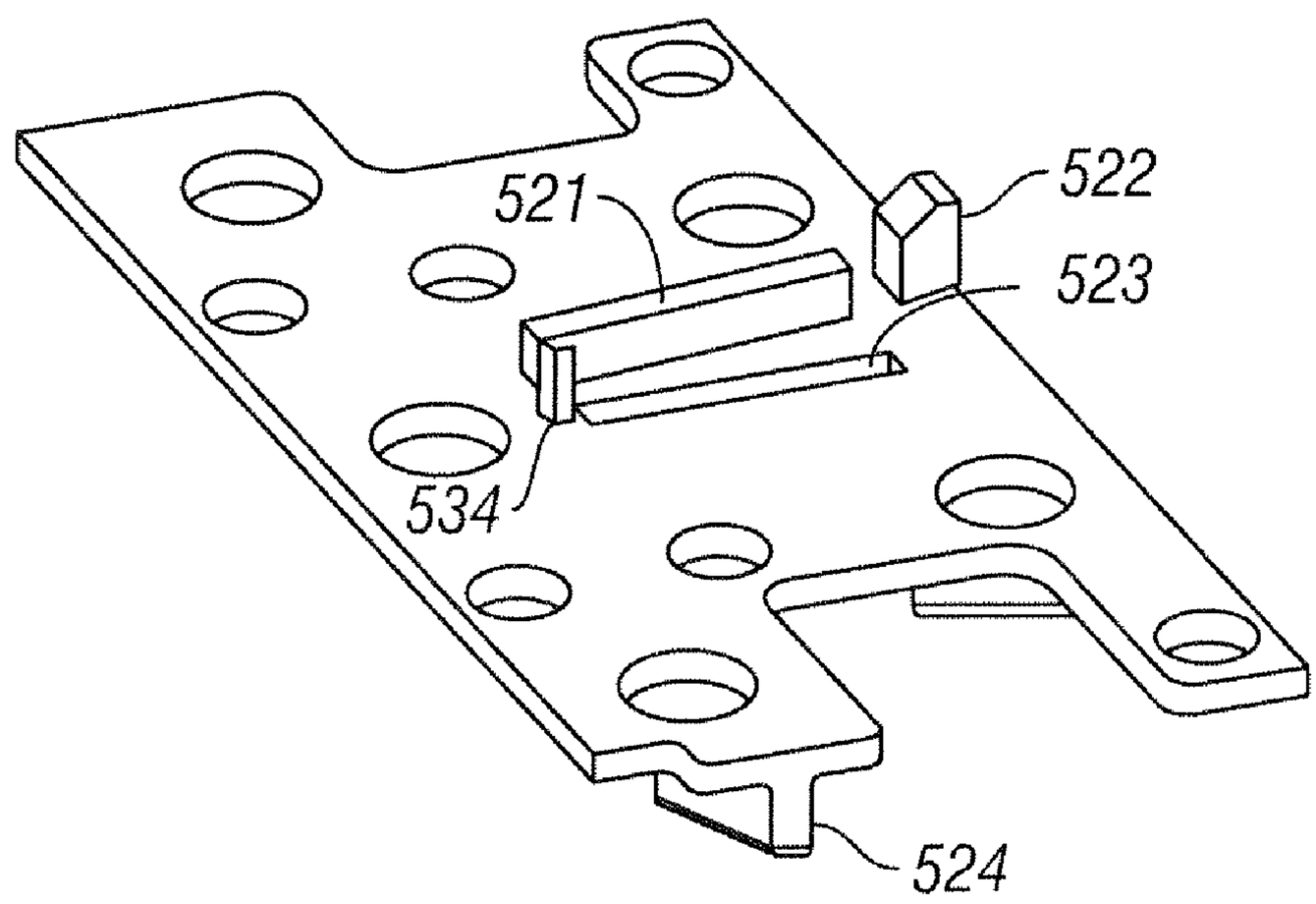

FIG. 53B

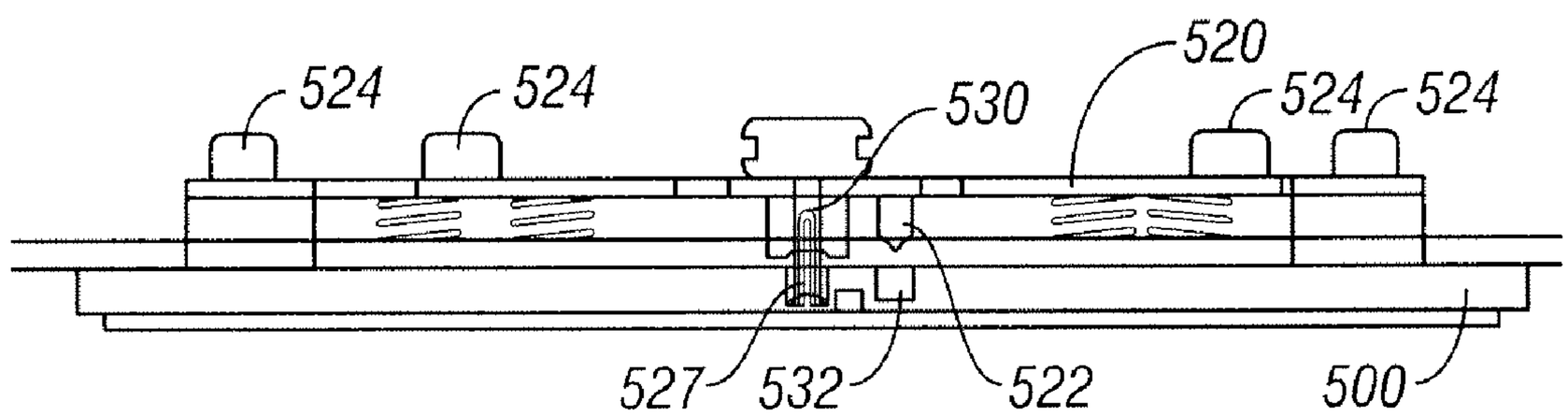

FIG. 54A

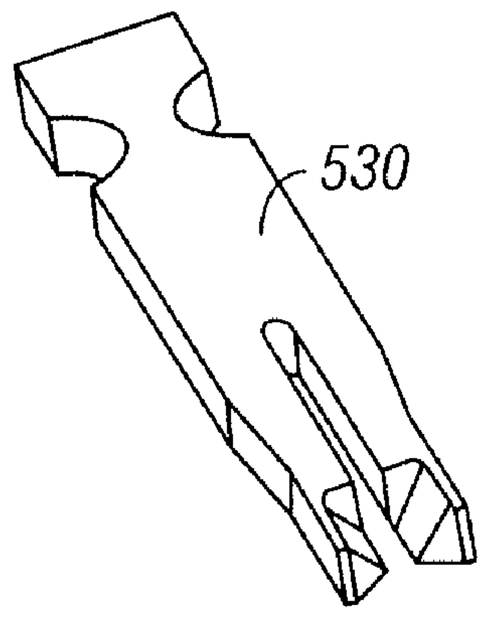

FIG. 54B

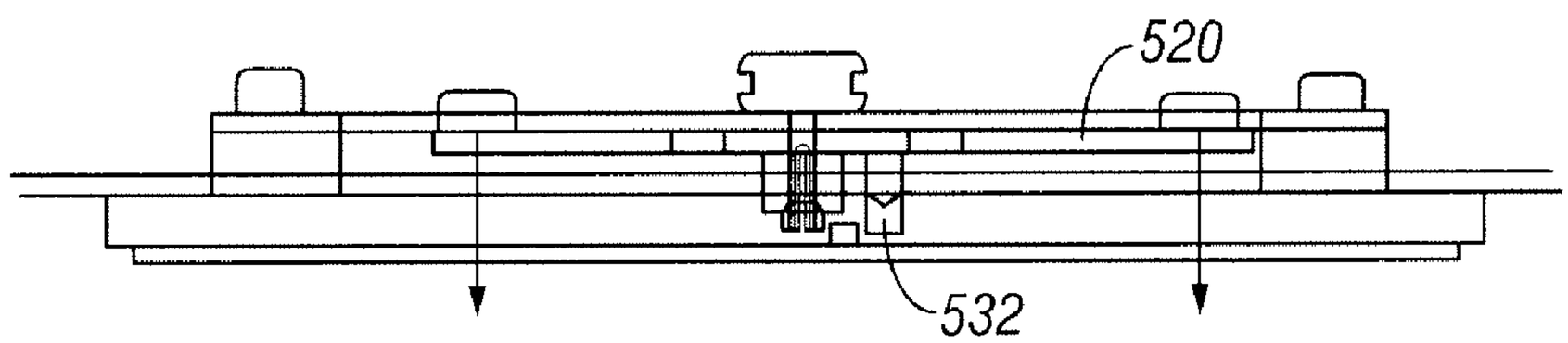

FIG. 54C

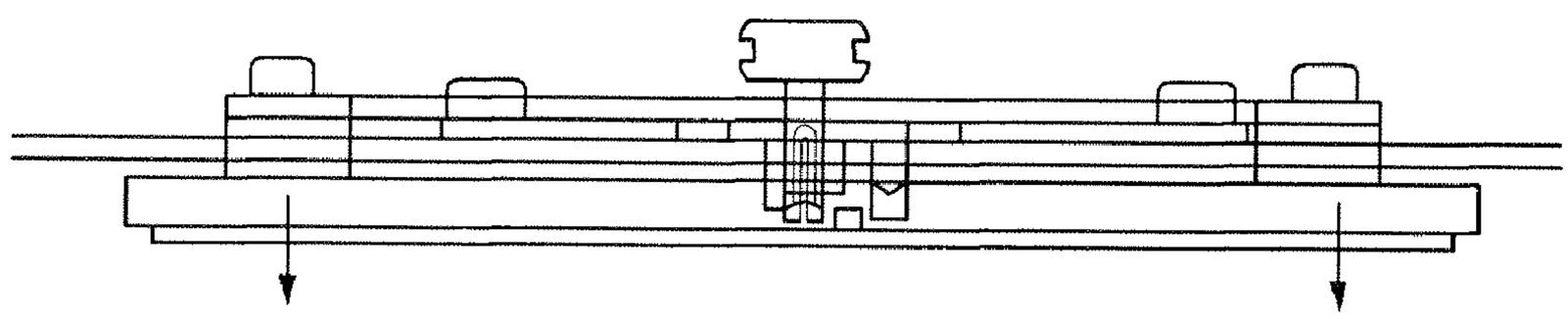

FIG. 54D

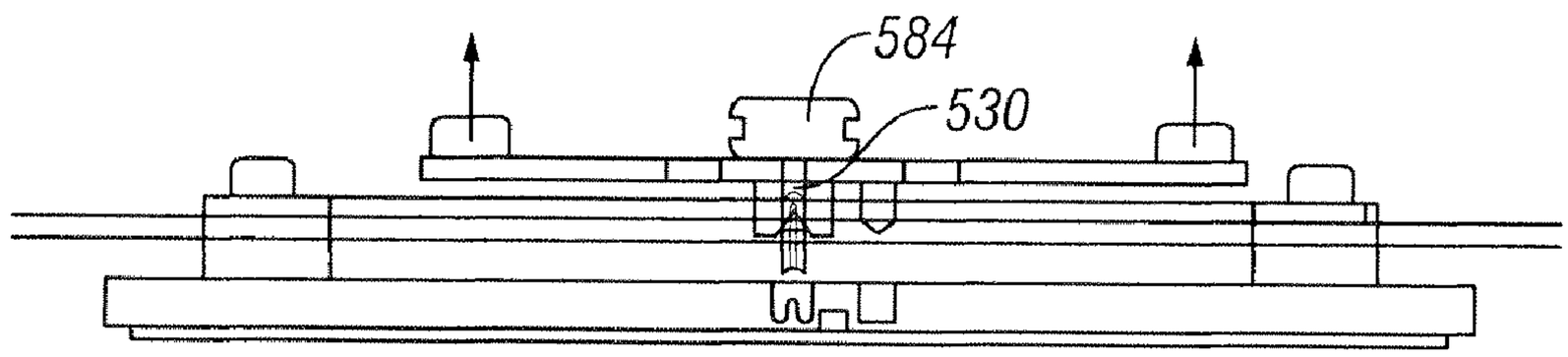

FIG. 54E

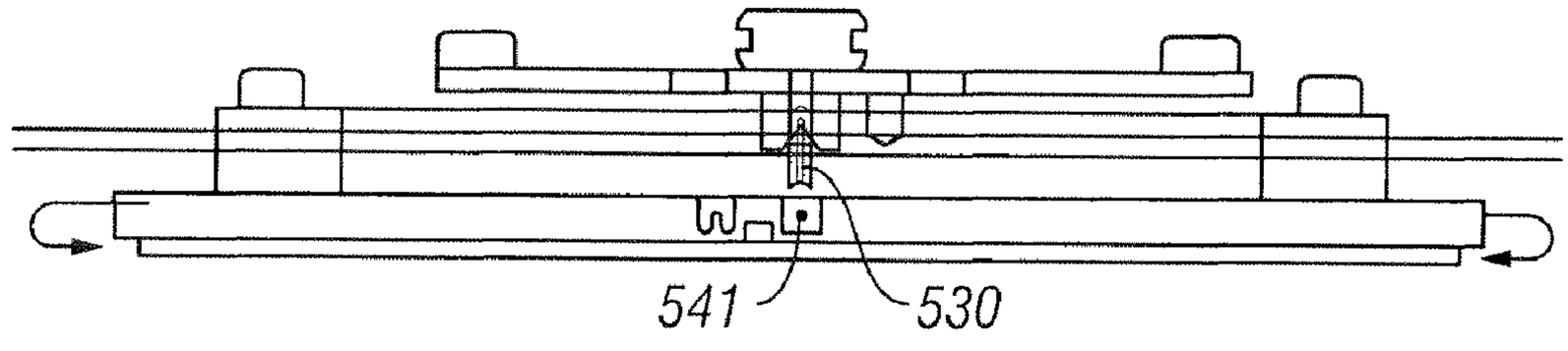

FIG. 54F

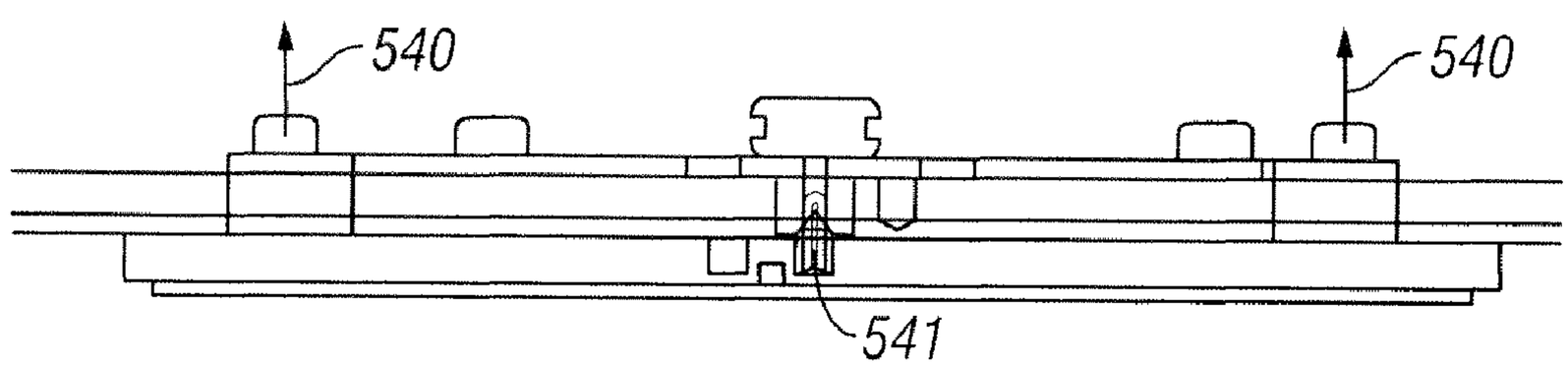

FIG. 54G

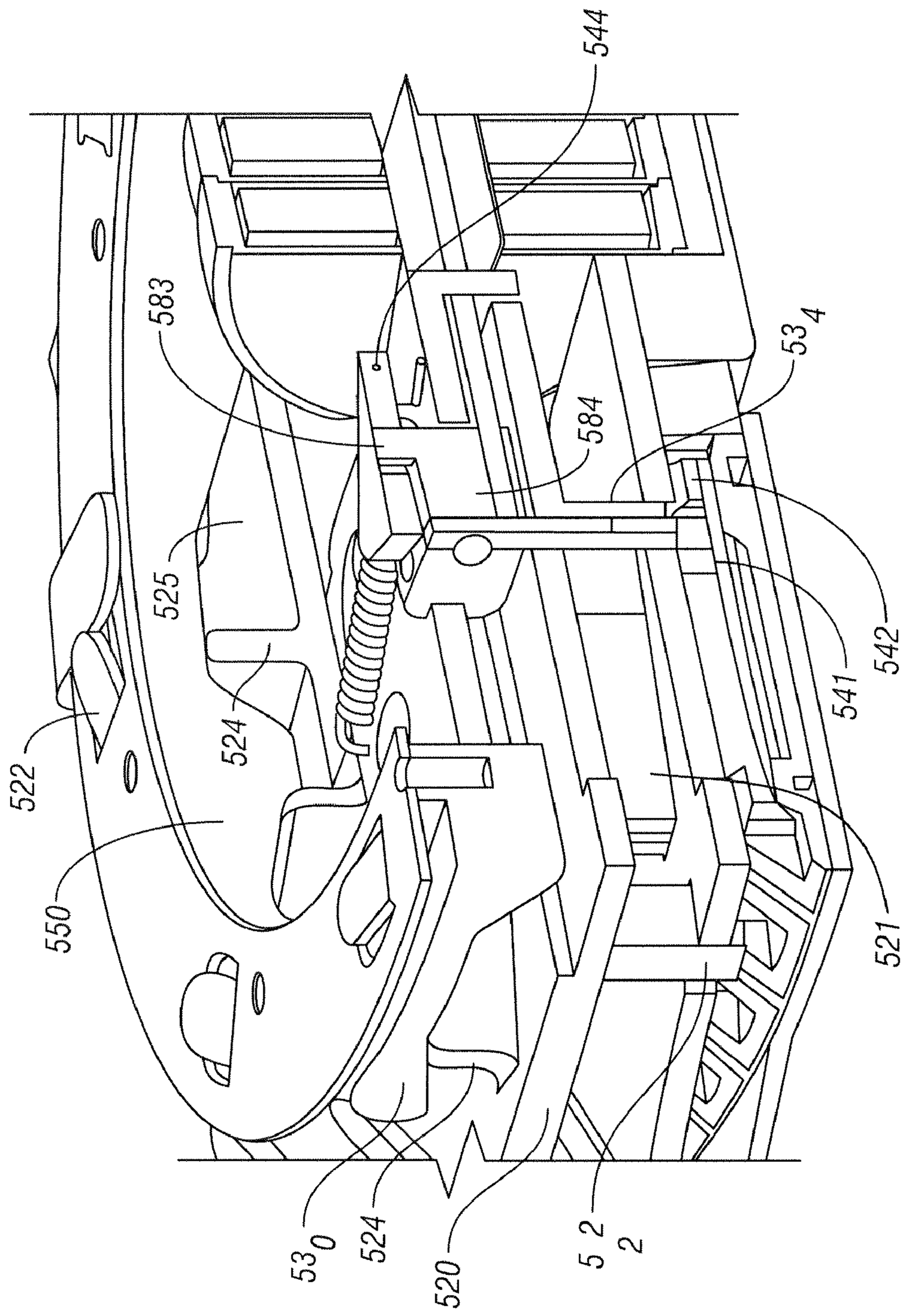

FIG. 55A

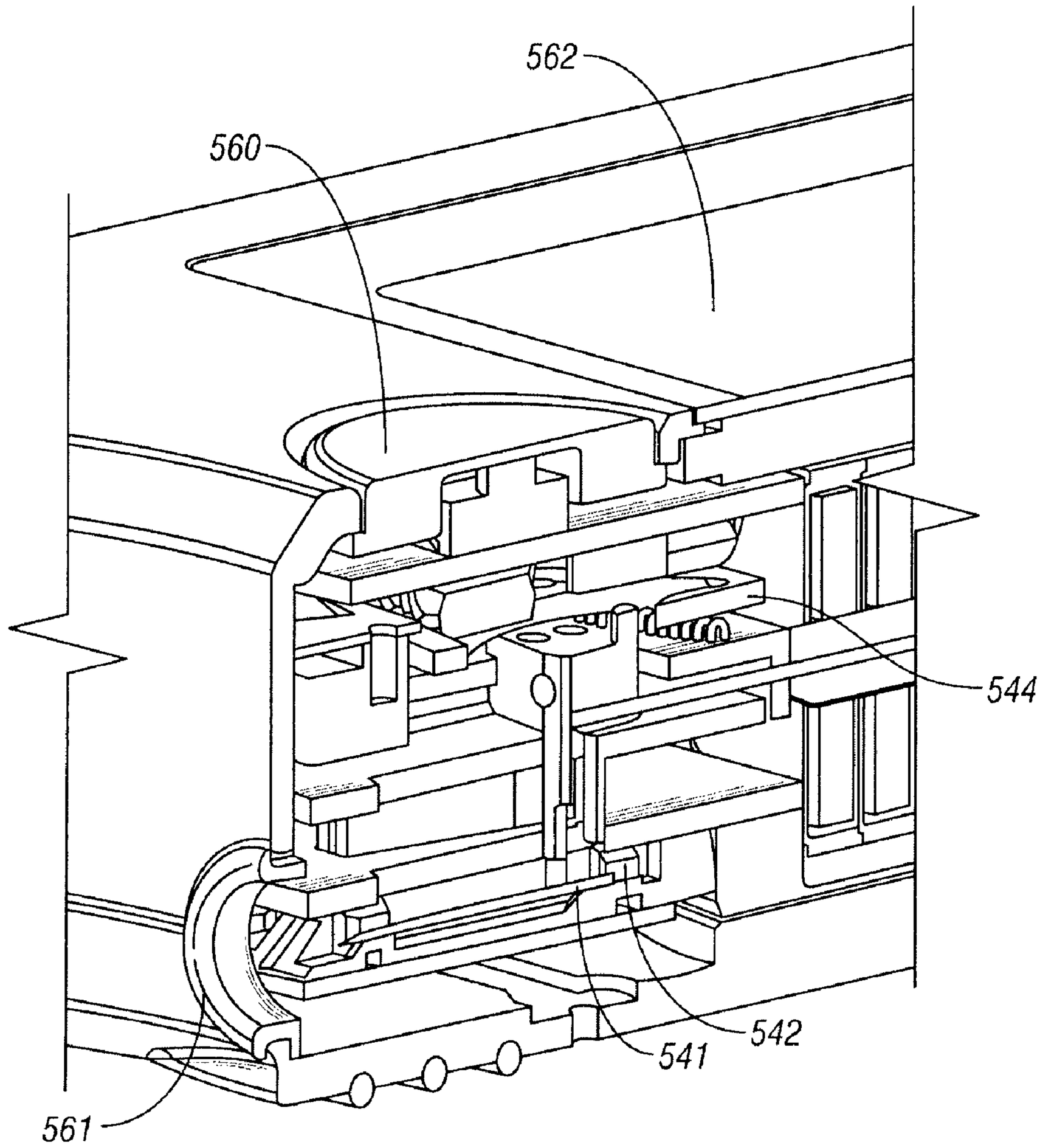

FIG. 55B

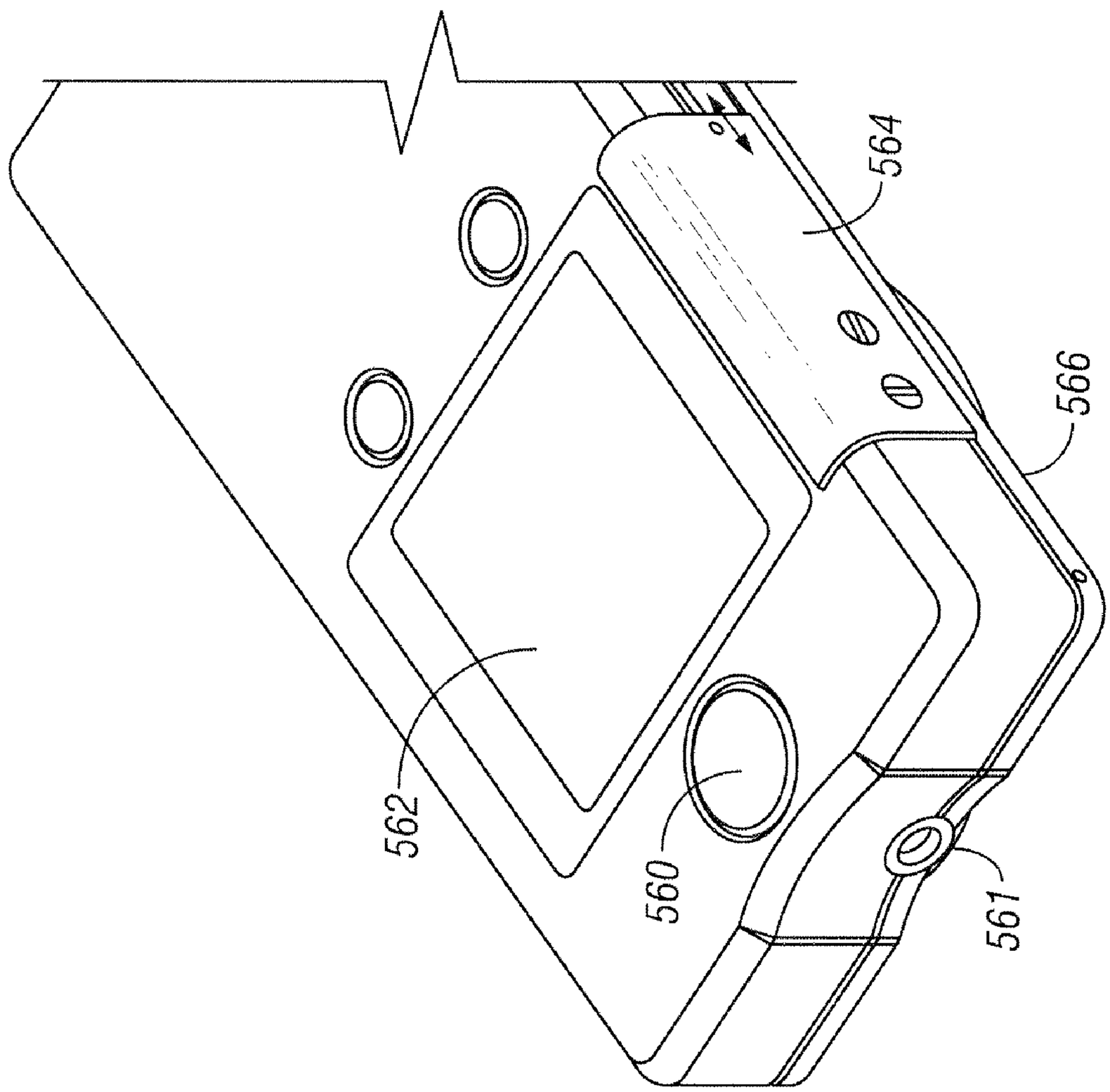

FIG. 56A

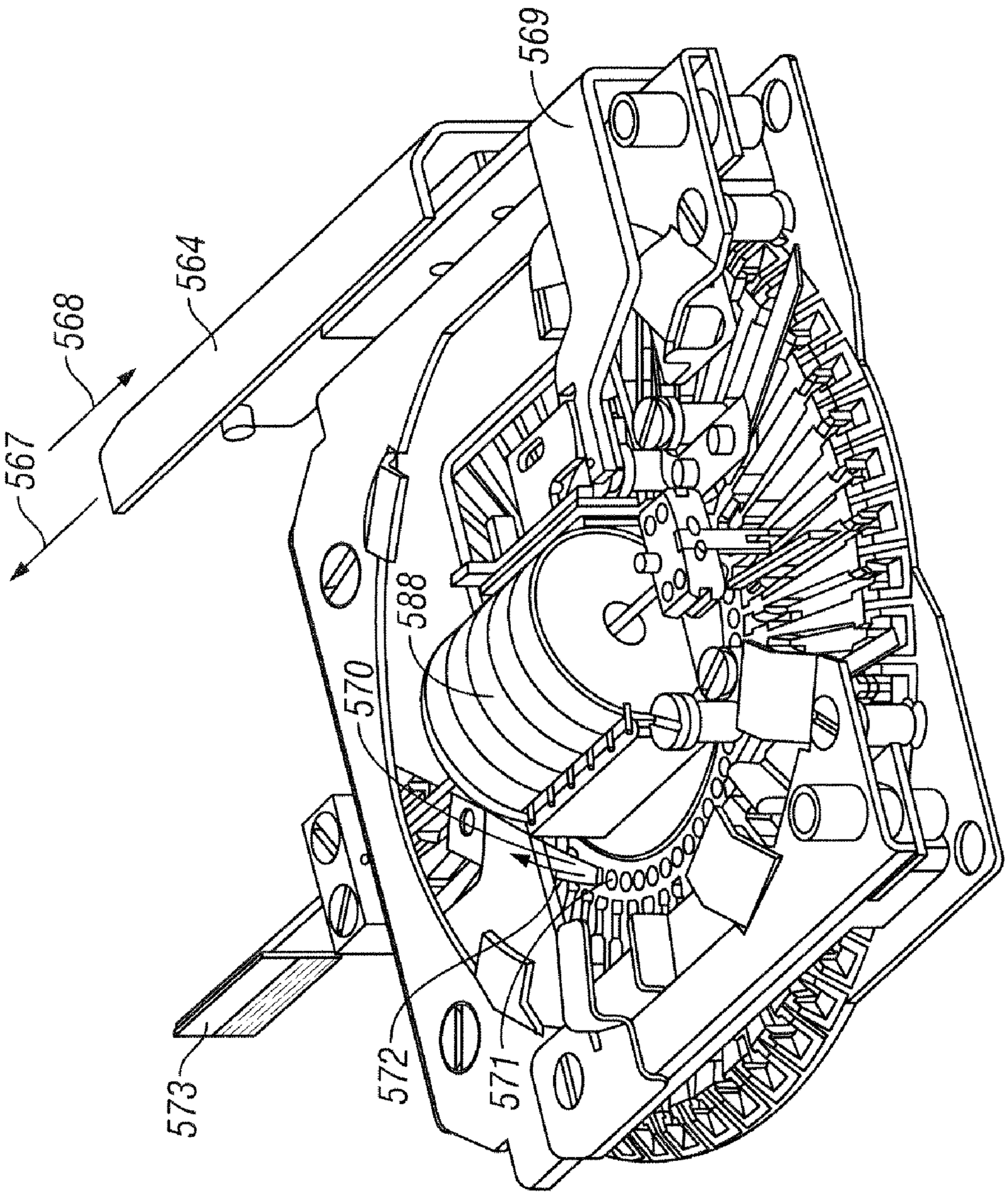

FIG. 56B

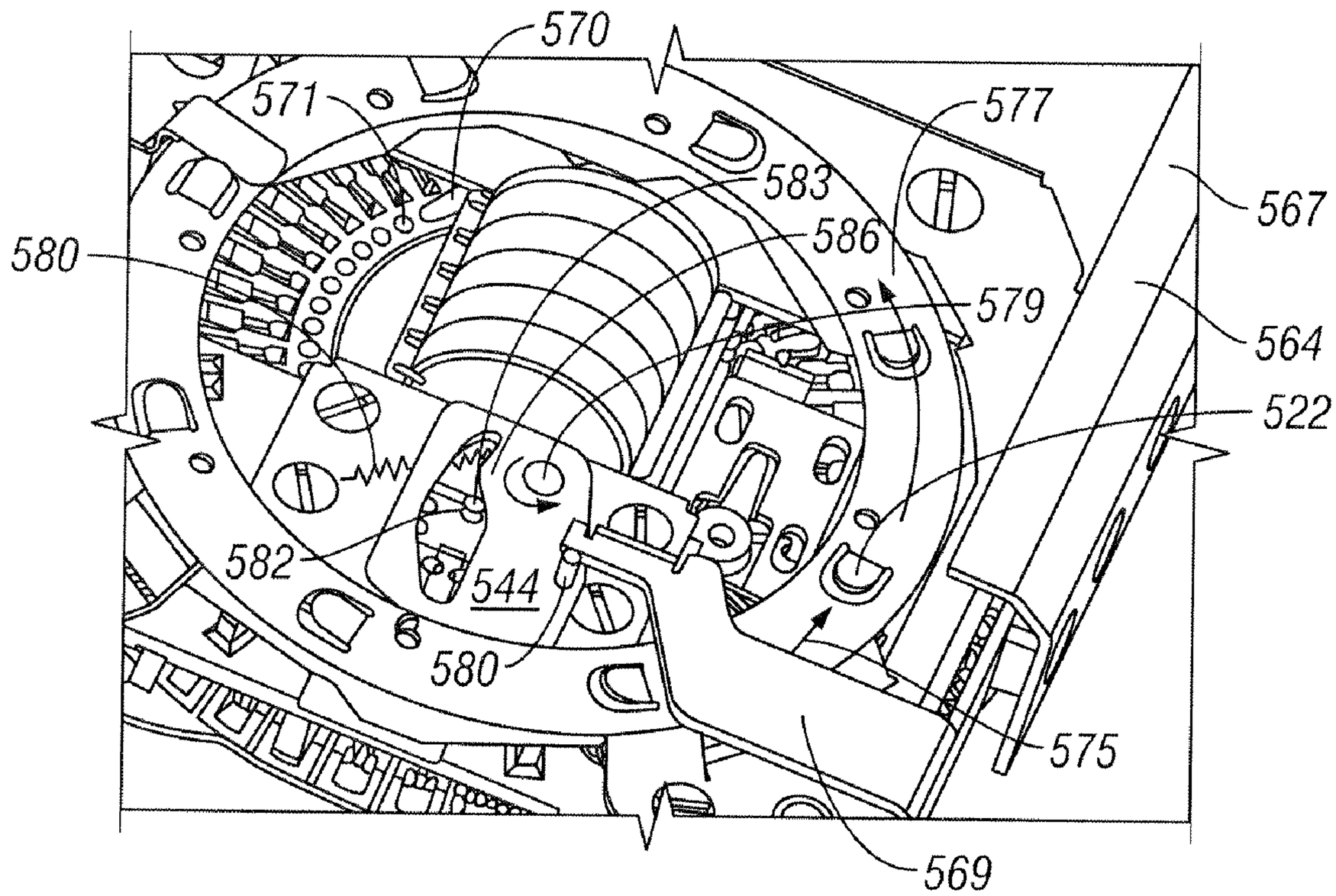

FIG. 56C

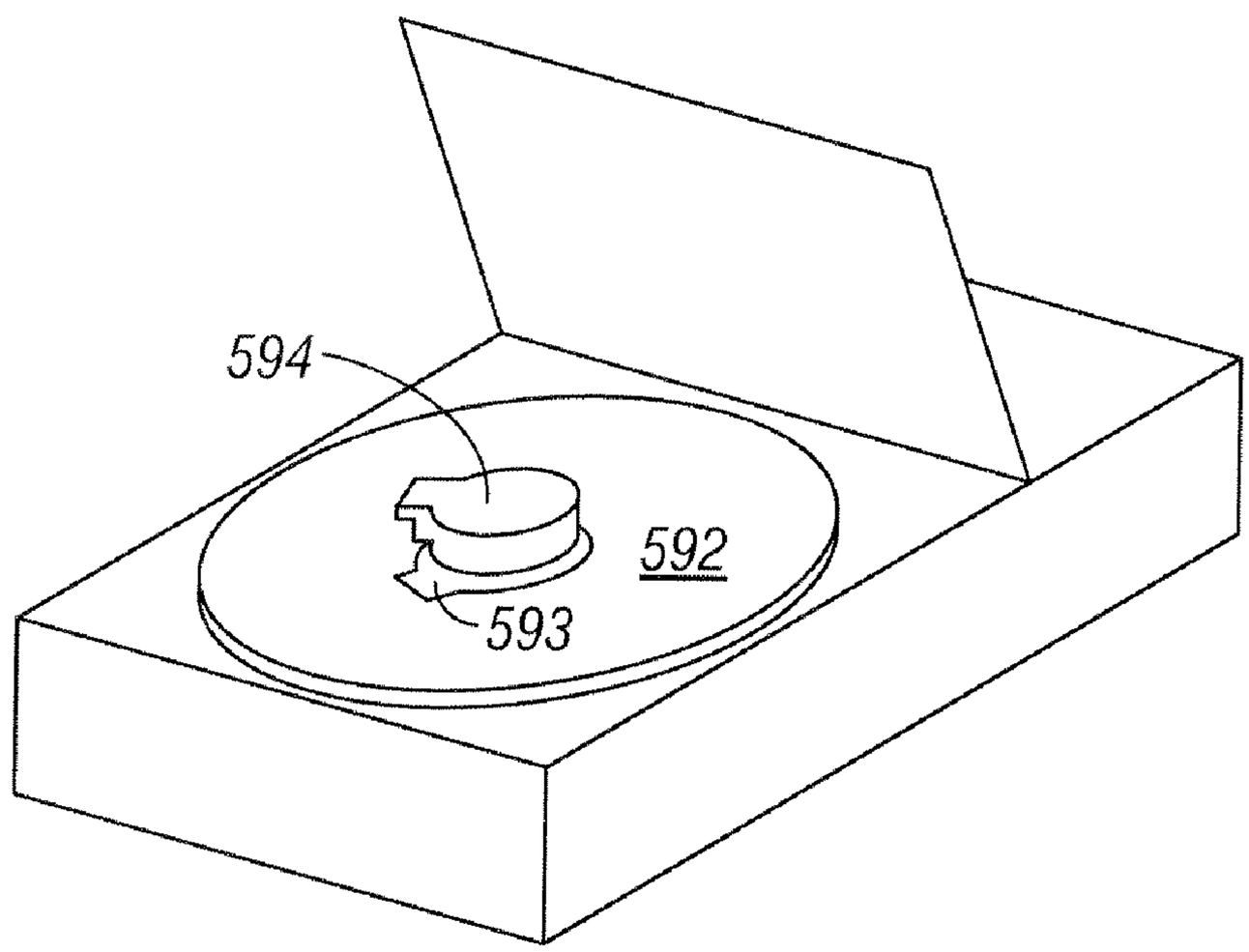

FIG. 56D

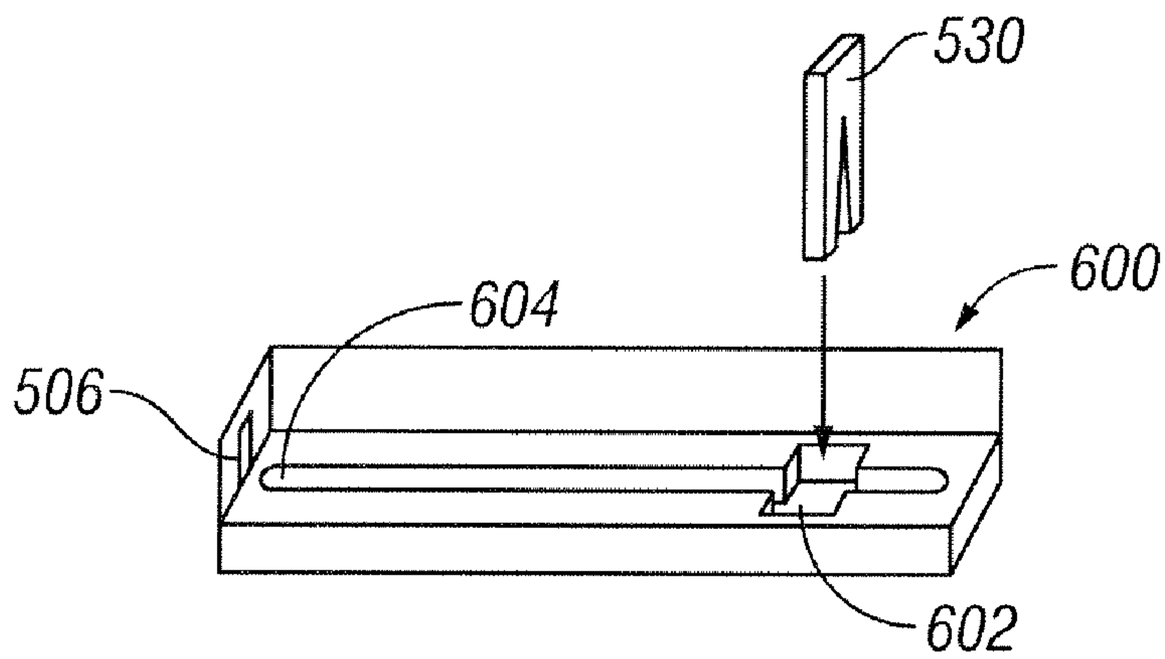

FIG. 57

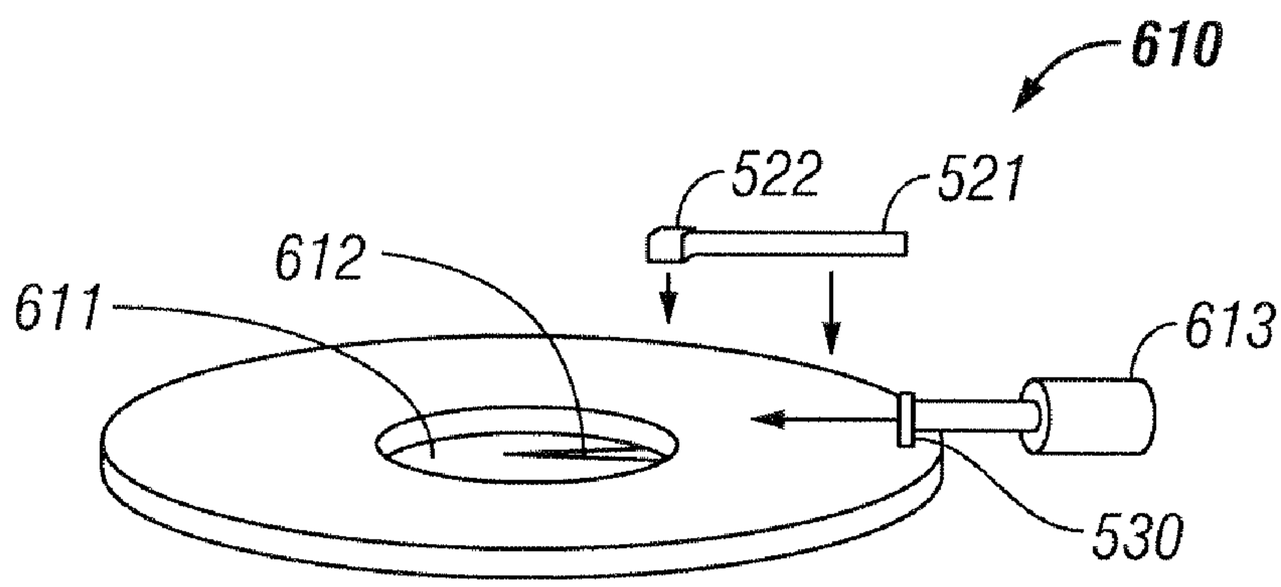

FIG. 58

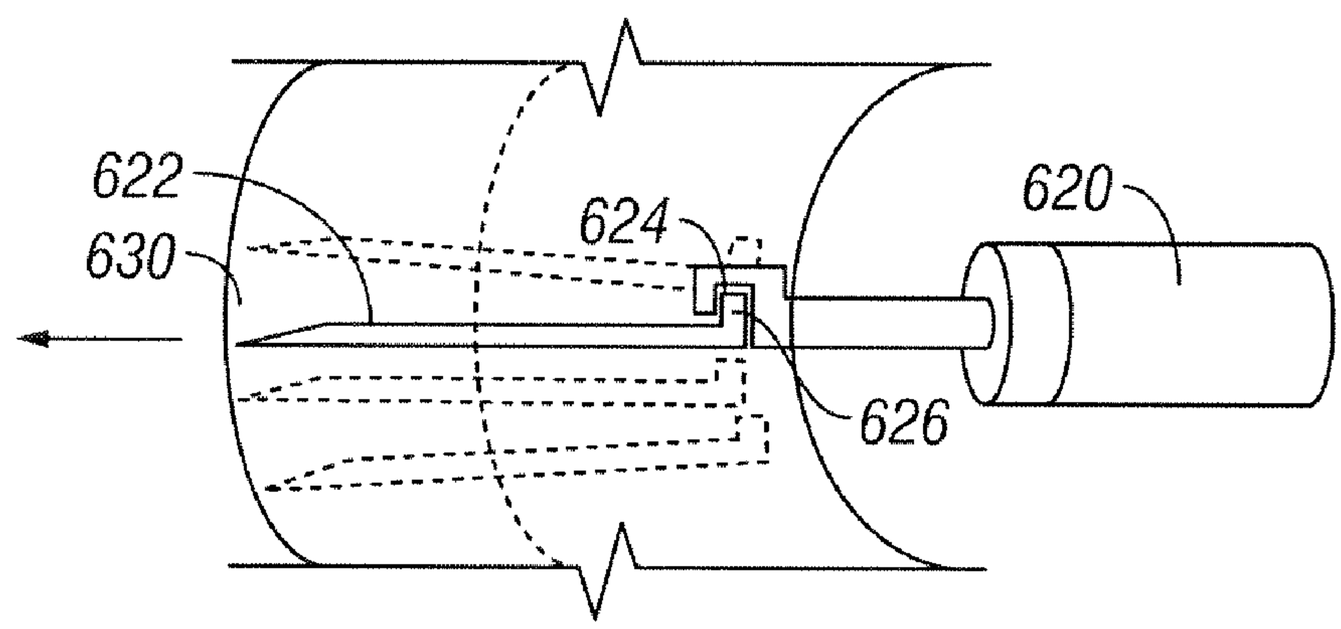

FIG. 59

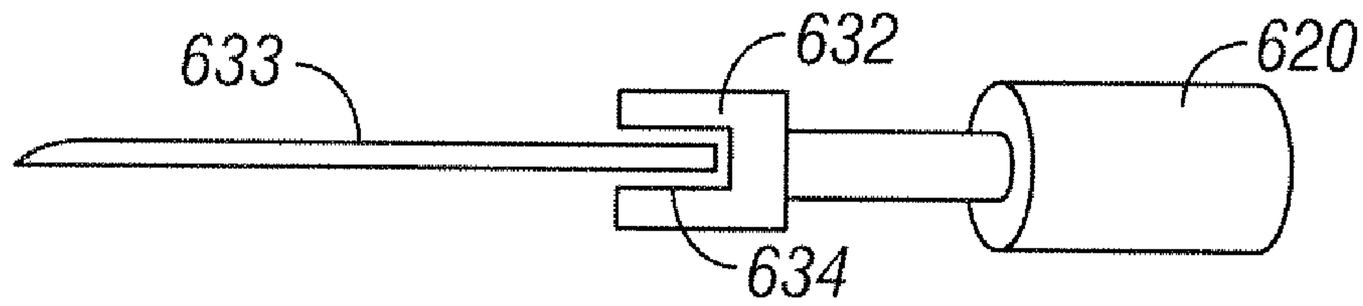

FIG. 60A

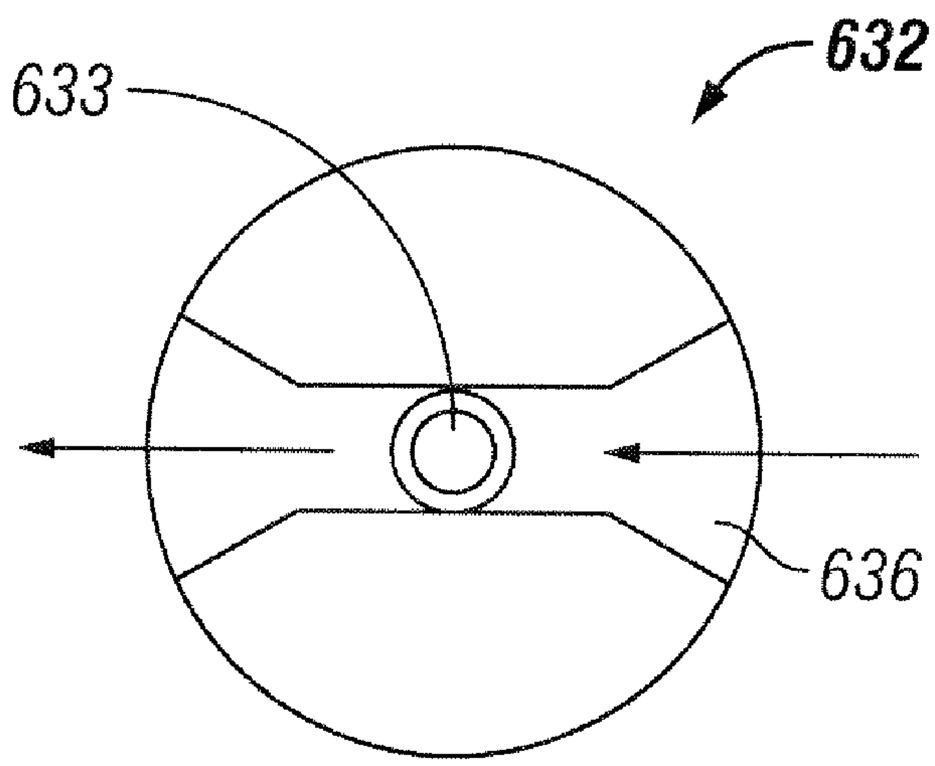

FIG. 60B

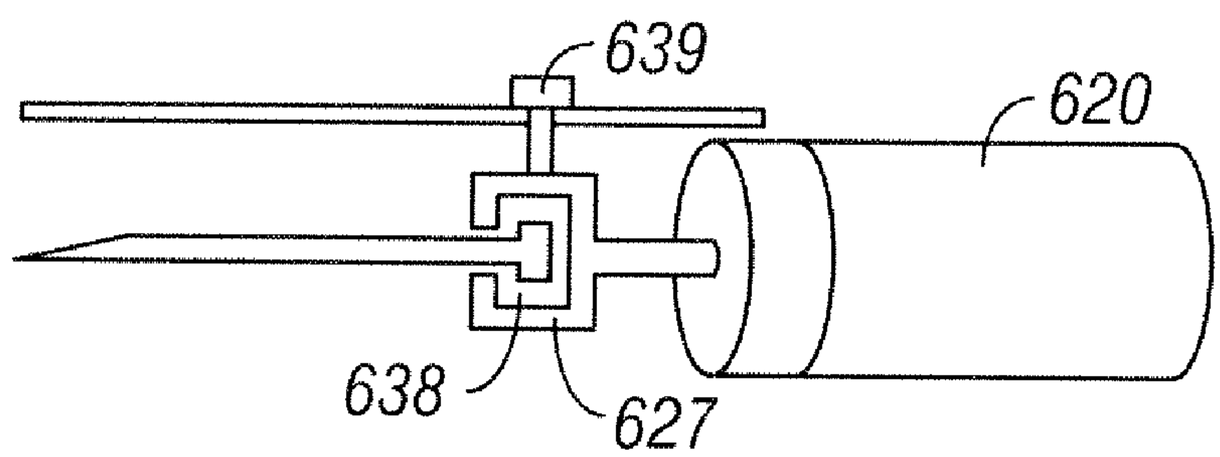

FIG. 60C

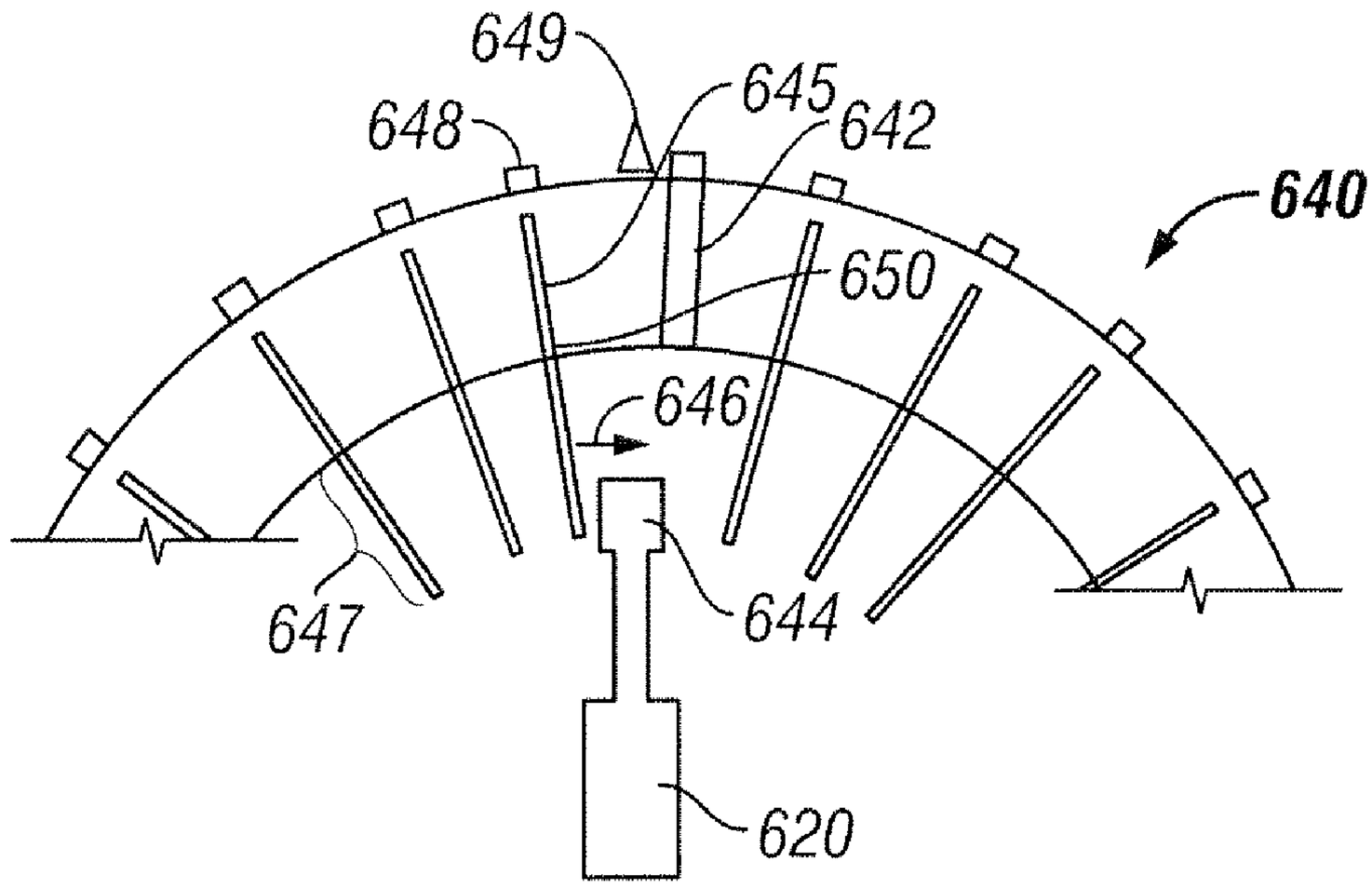
649
645
642
648
640
650
646
647
644
620

FIG. 61

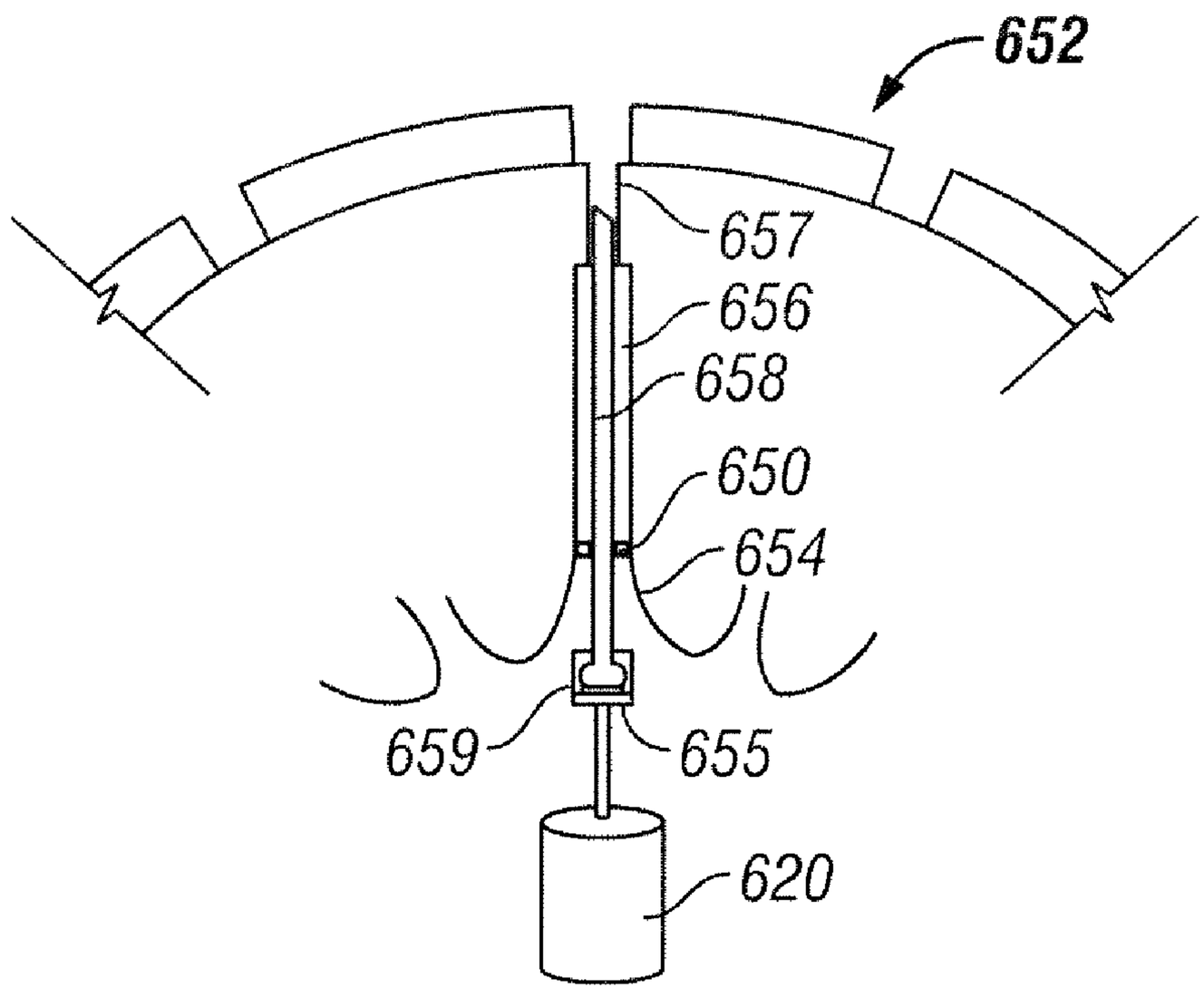
652
657
656
658
650
654
659
655
620

FIG. 62

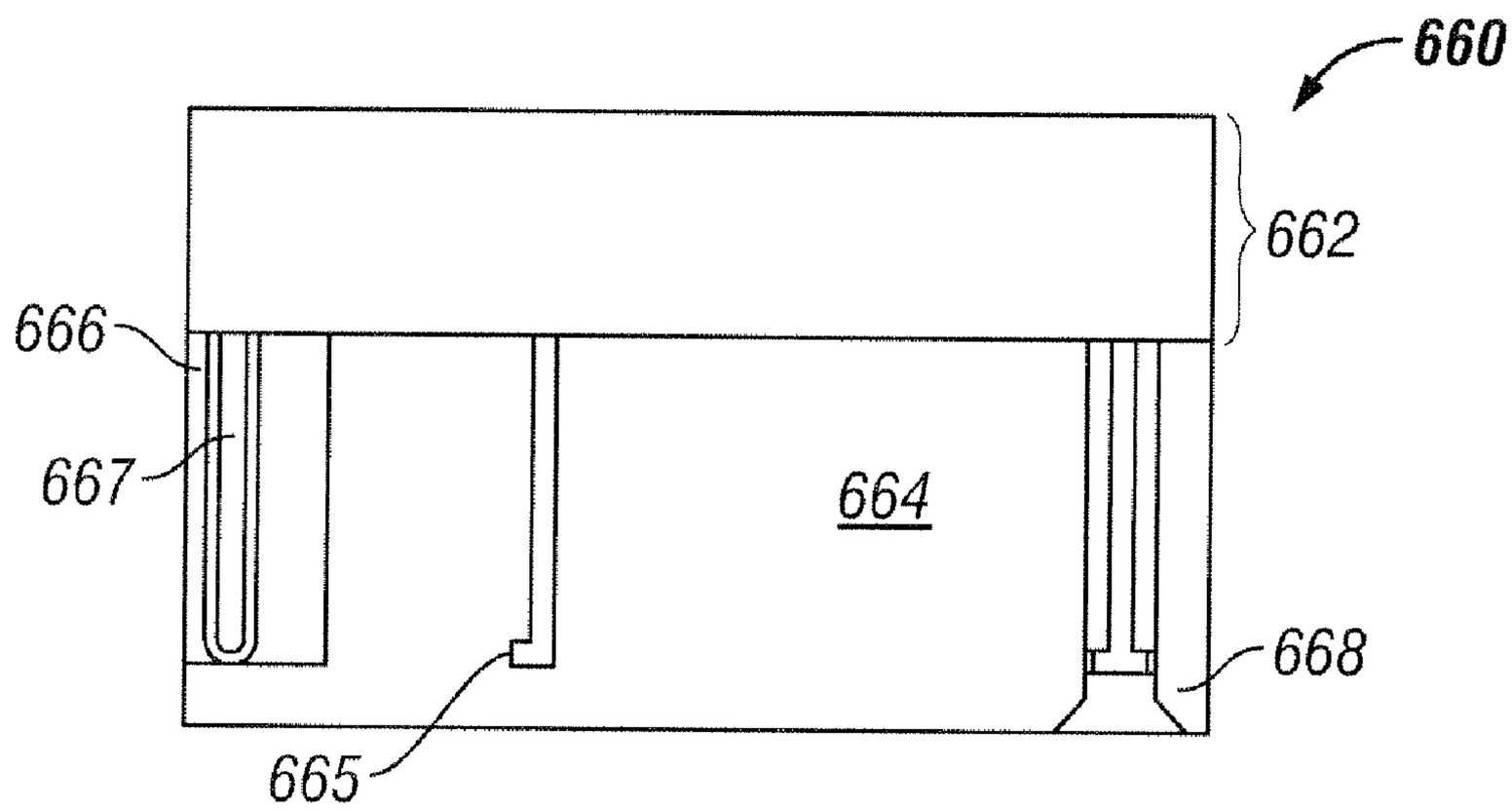

FIG. 63

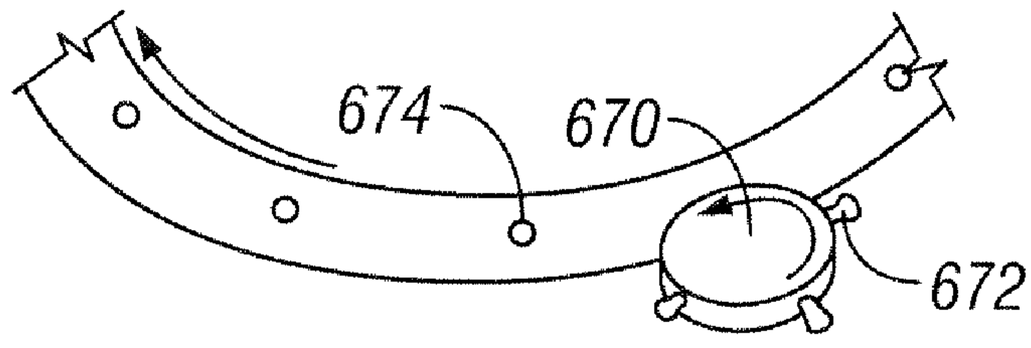

FIG. 64A

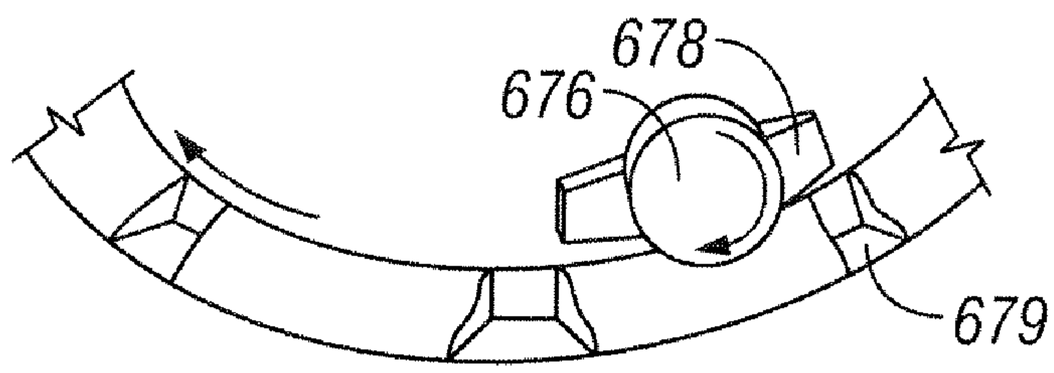

FIG. 64B

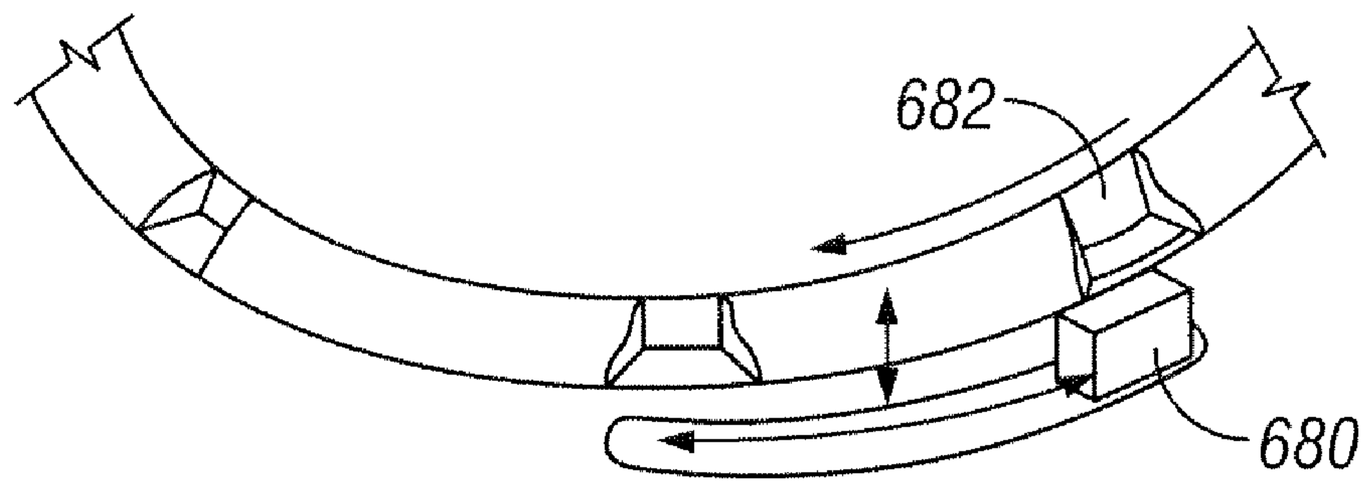

FIG. 64C

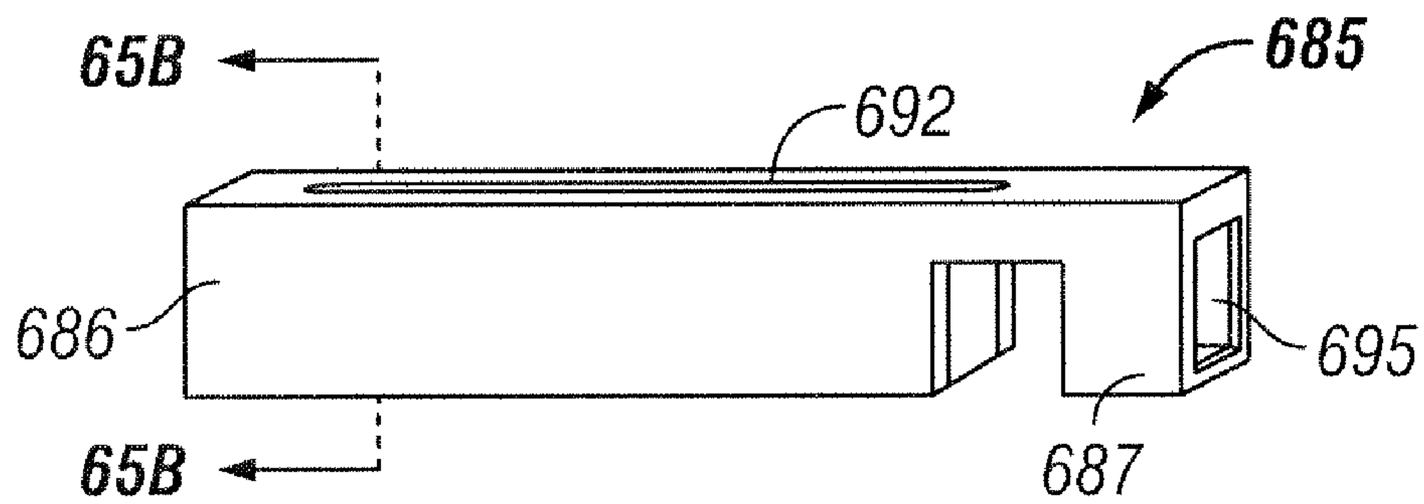

FIG. 65A

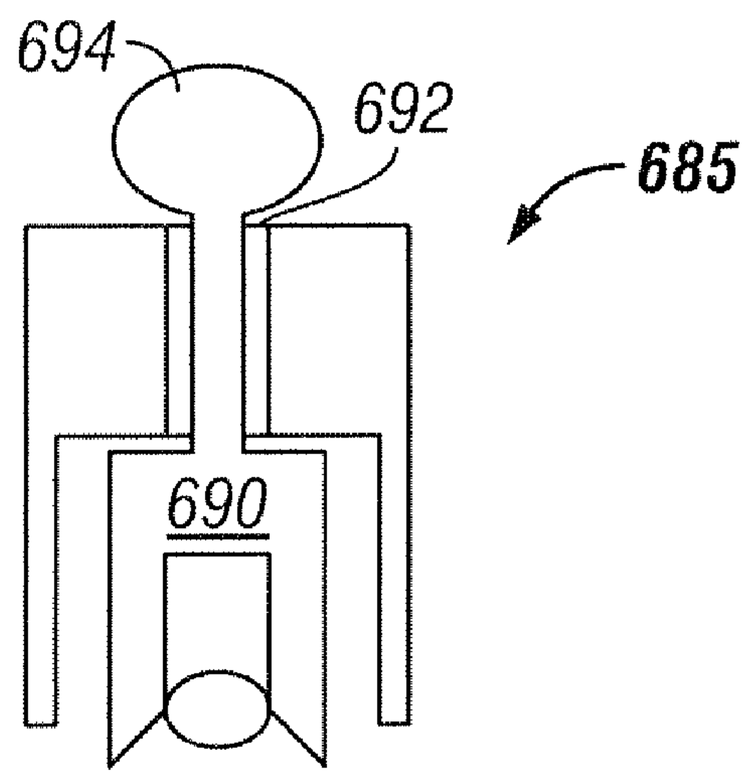

FIG. 65B

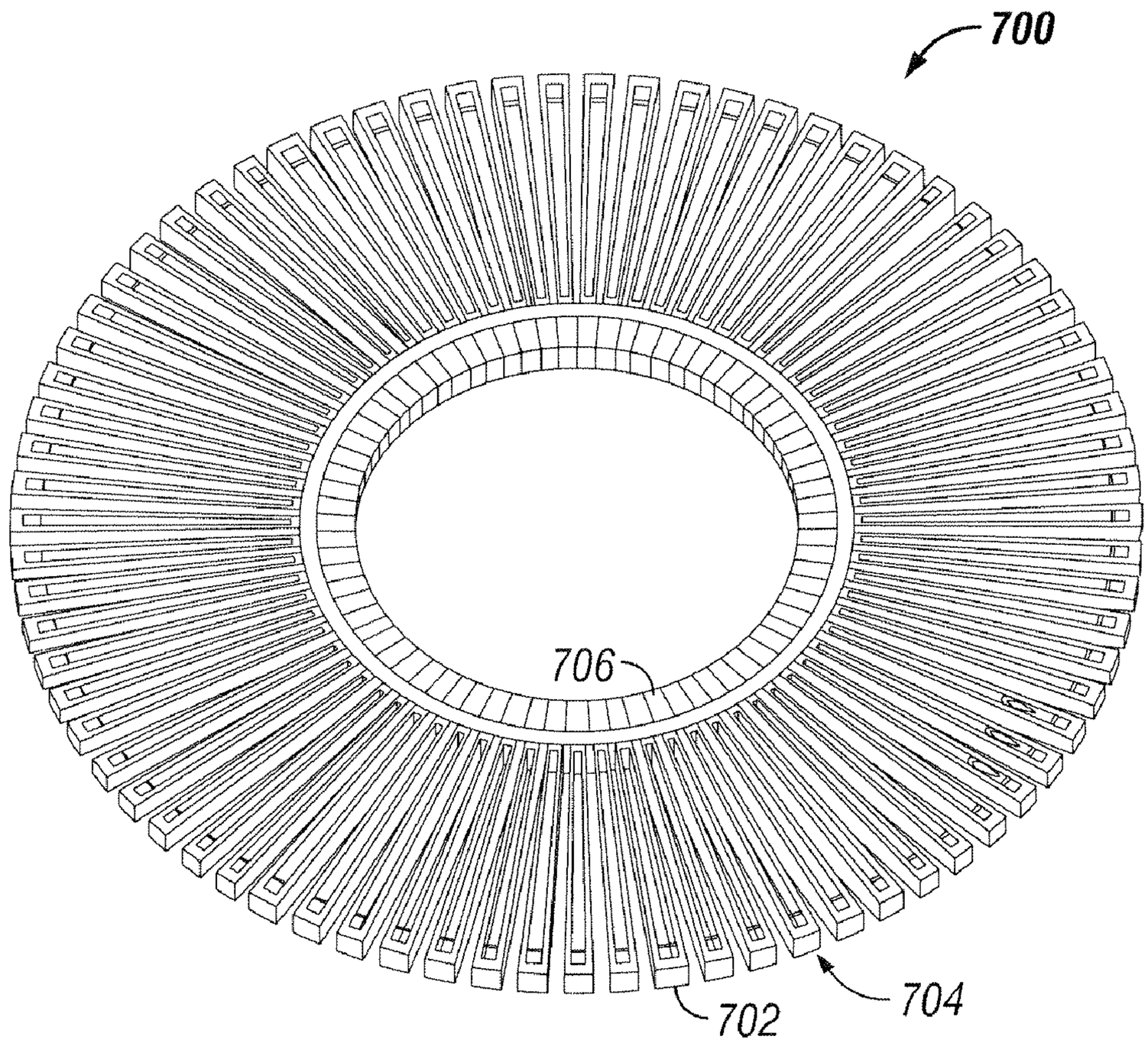

FIG. 66

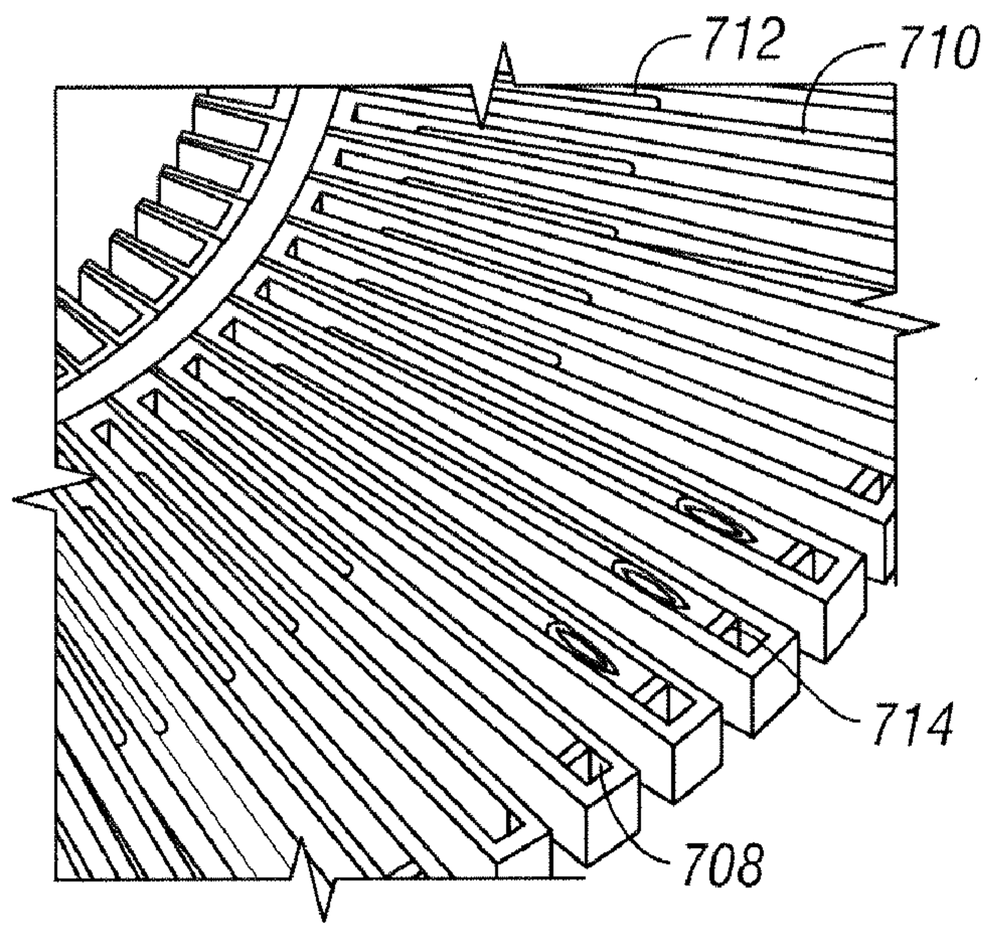

FIG. 67

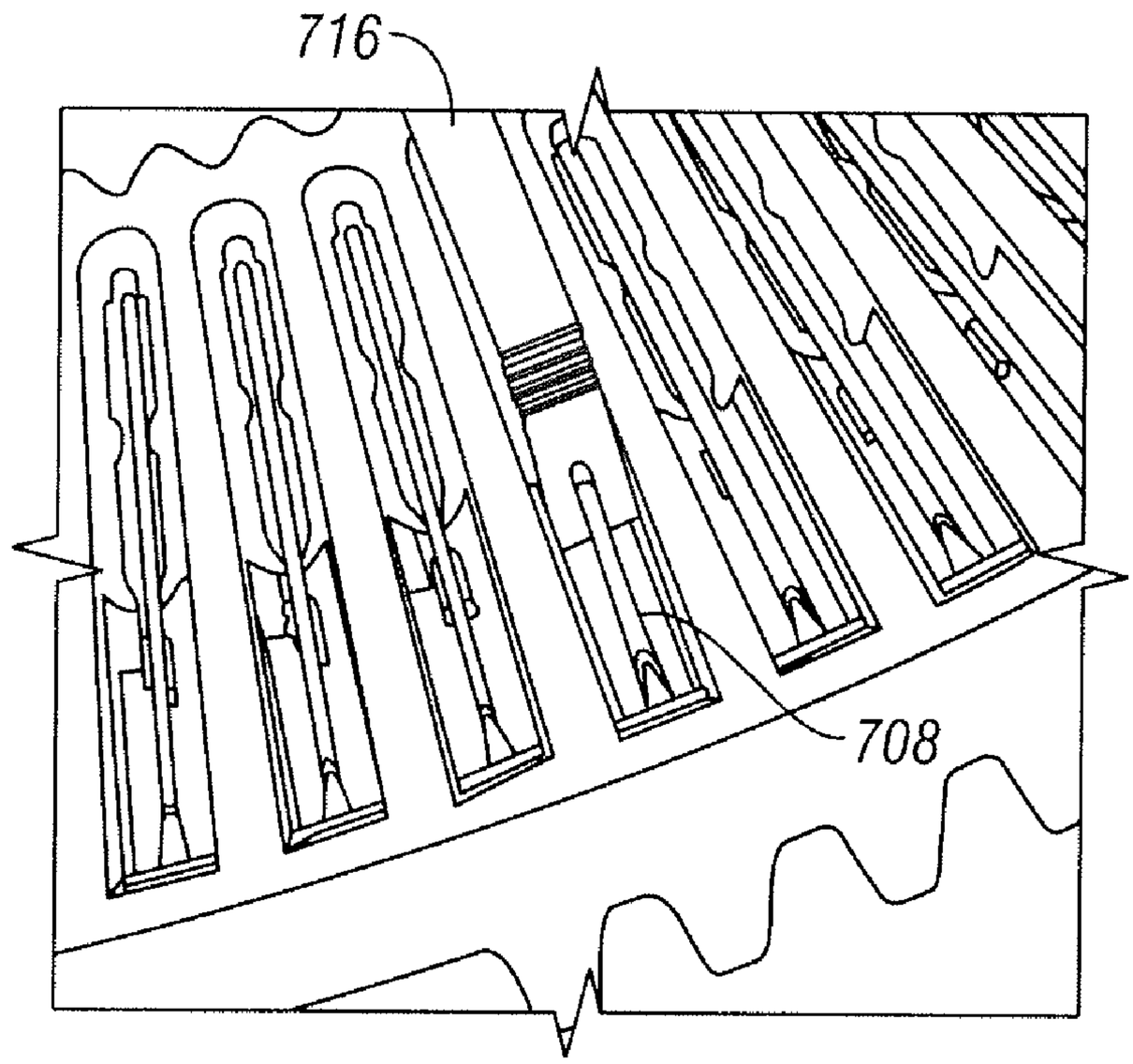

FIG. 68

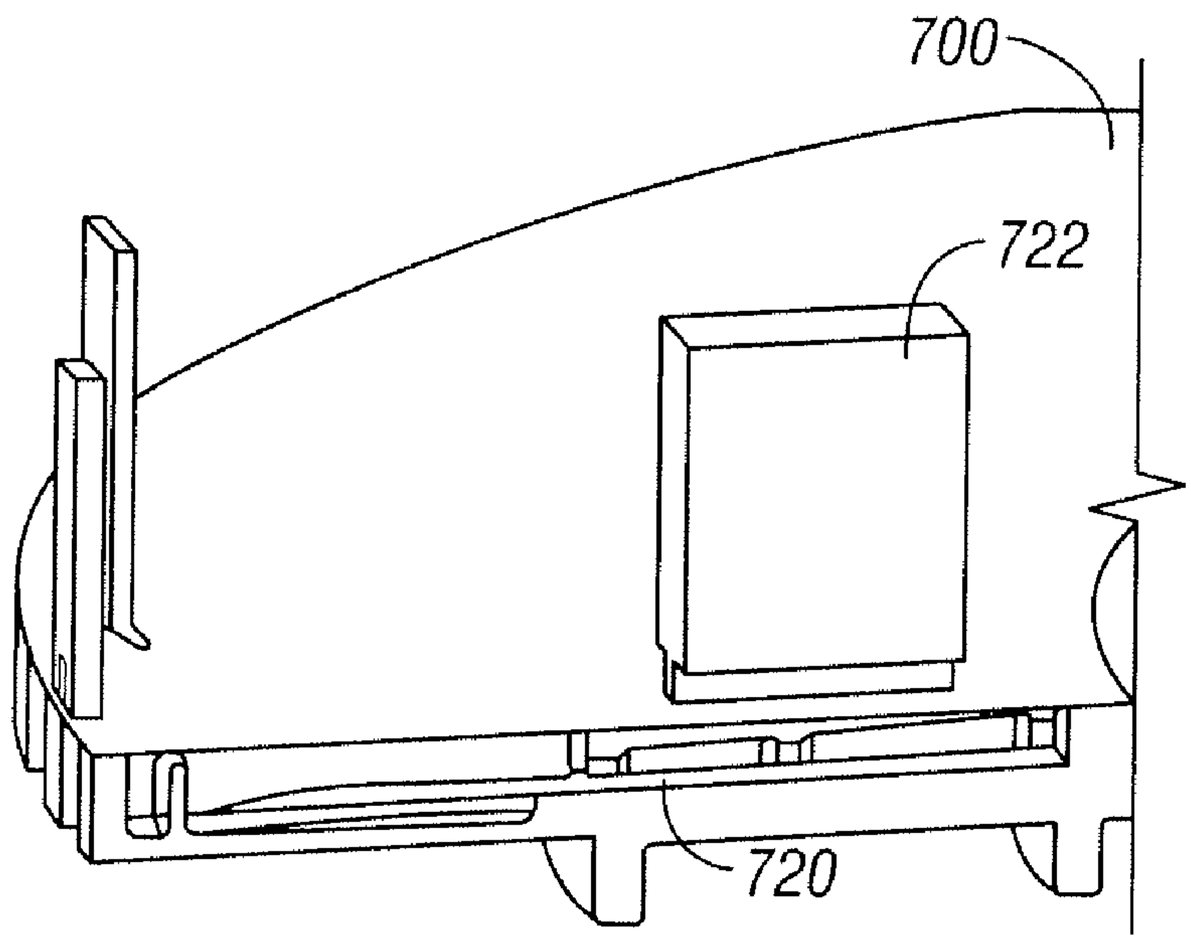

FIG. 69A

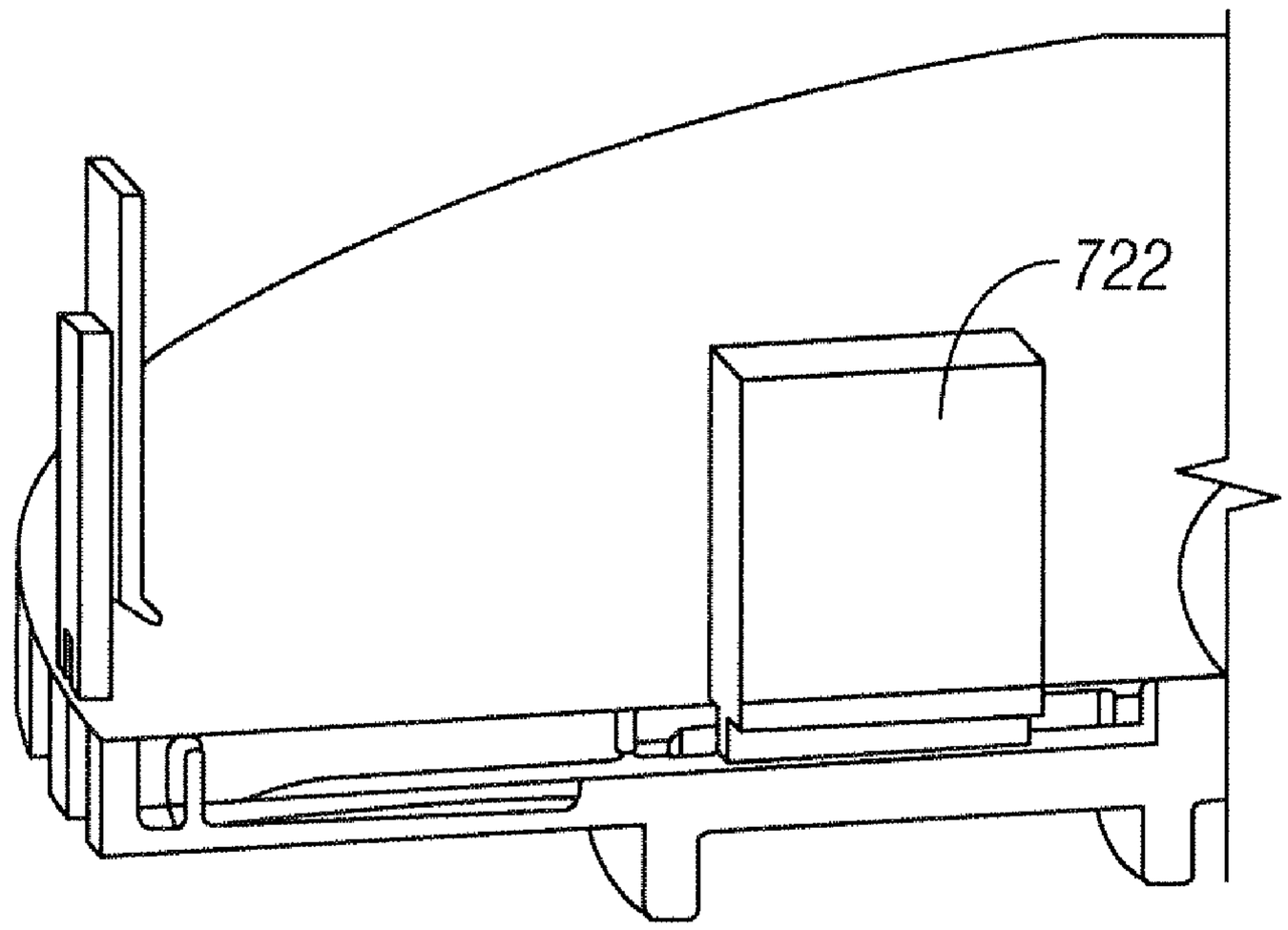

FIG. 69B

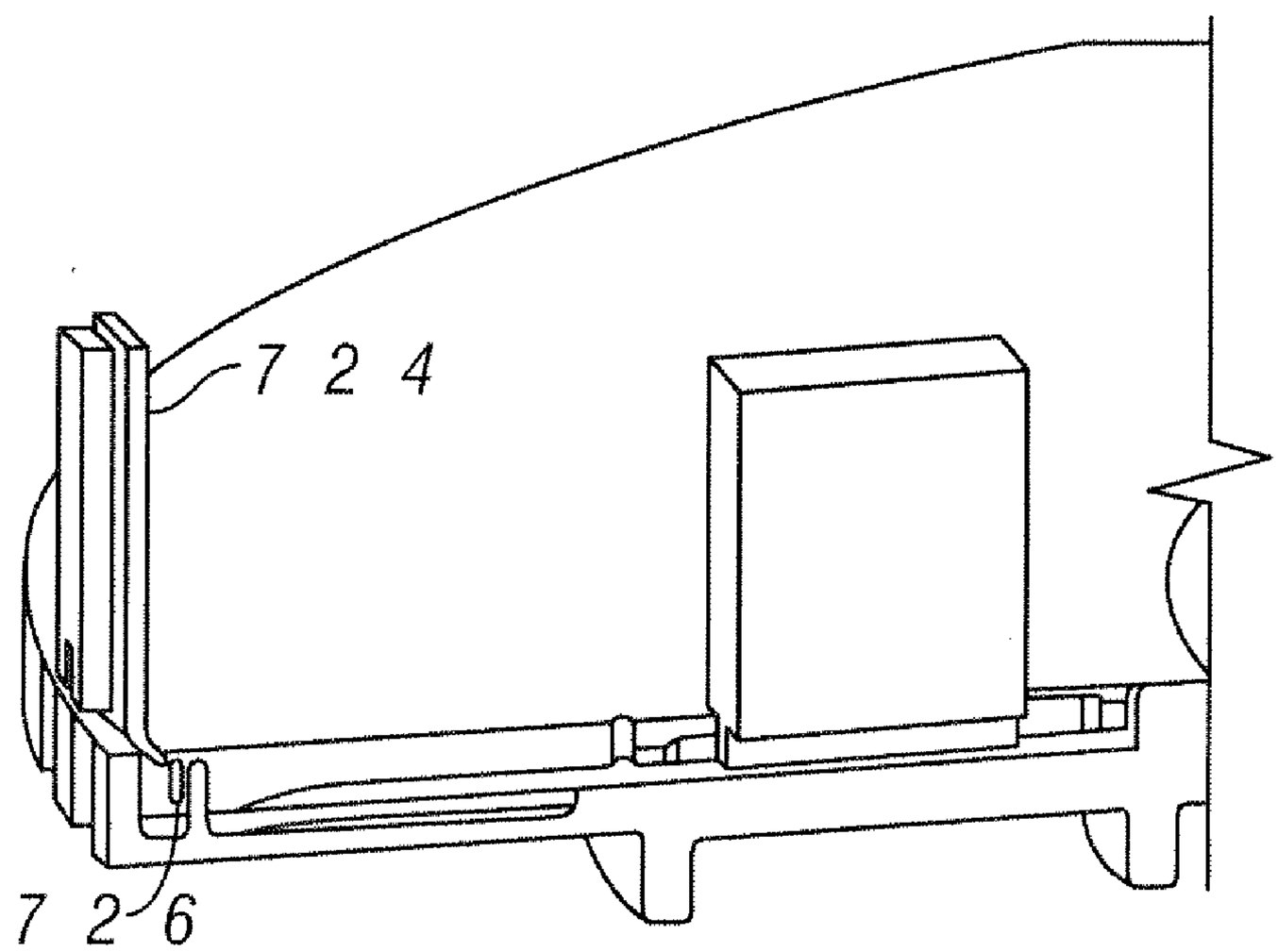

FIG. 69C

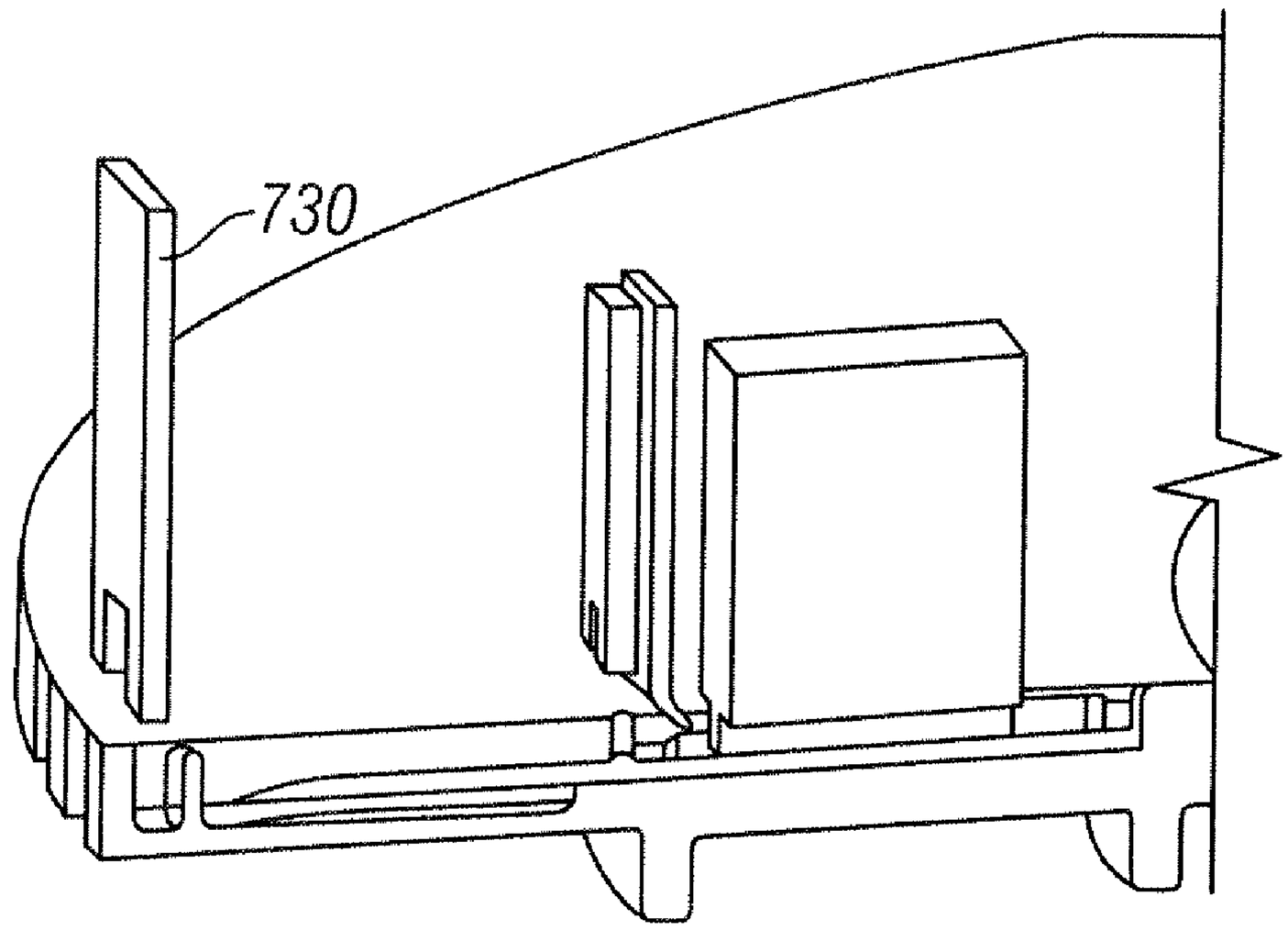

FIG. 69D

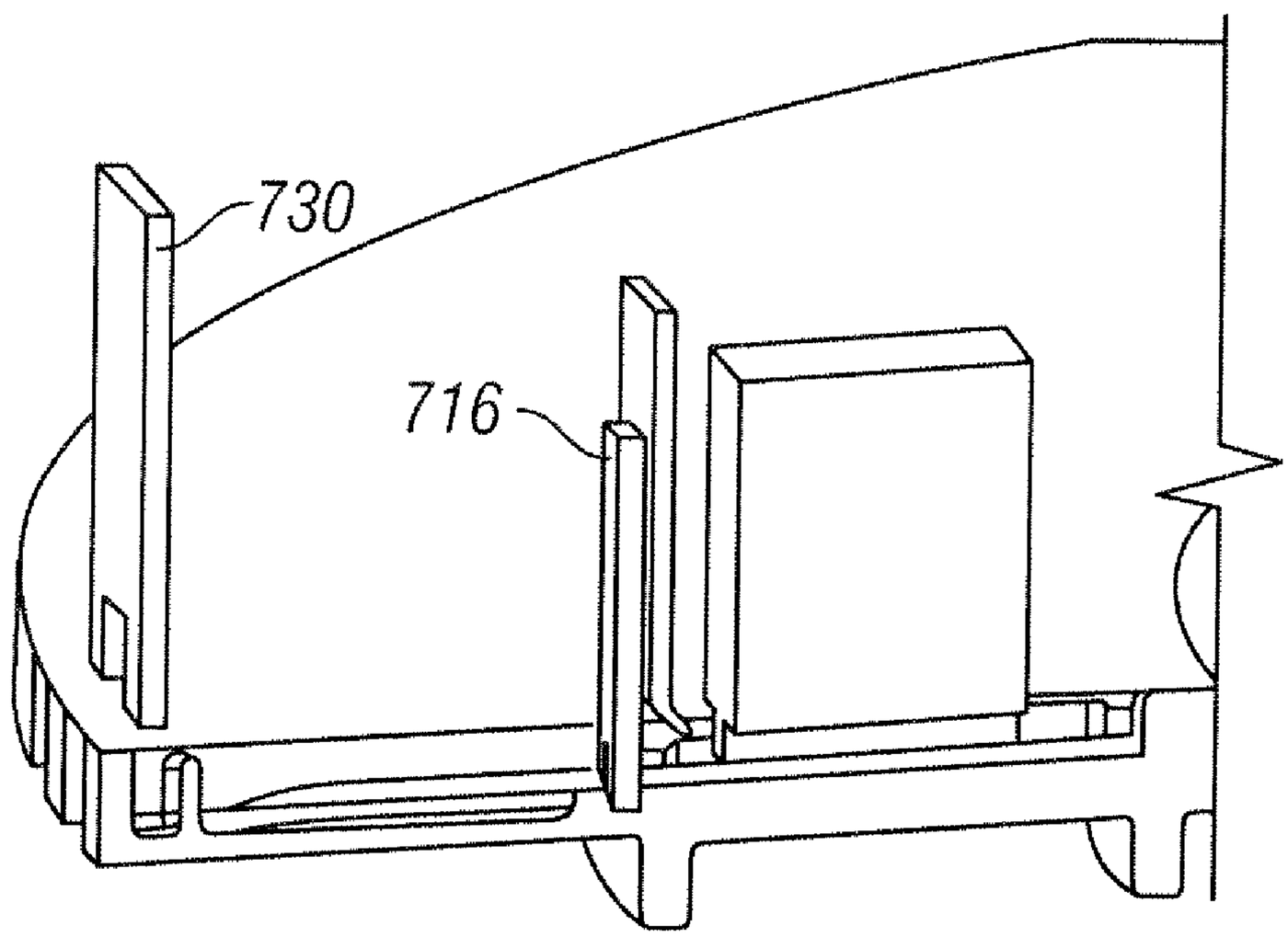

FIG. 69E

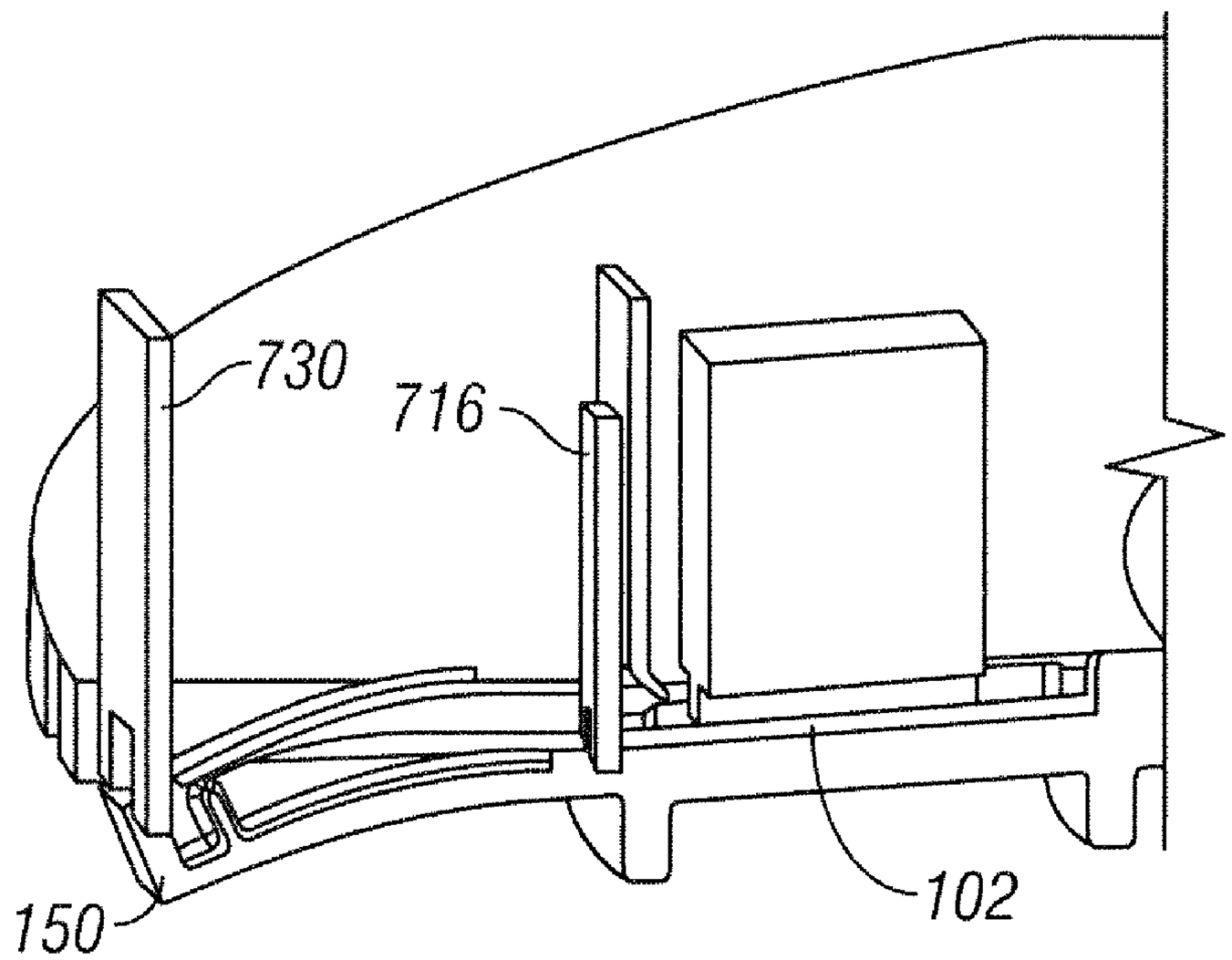

FIG. 69F

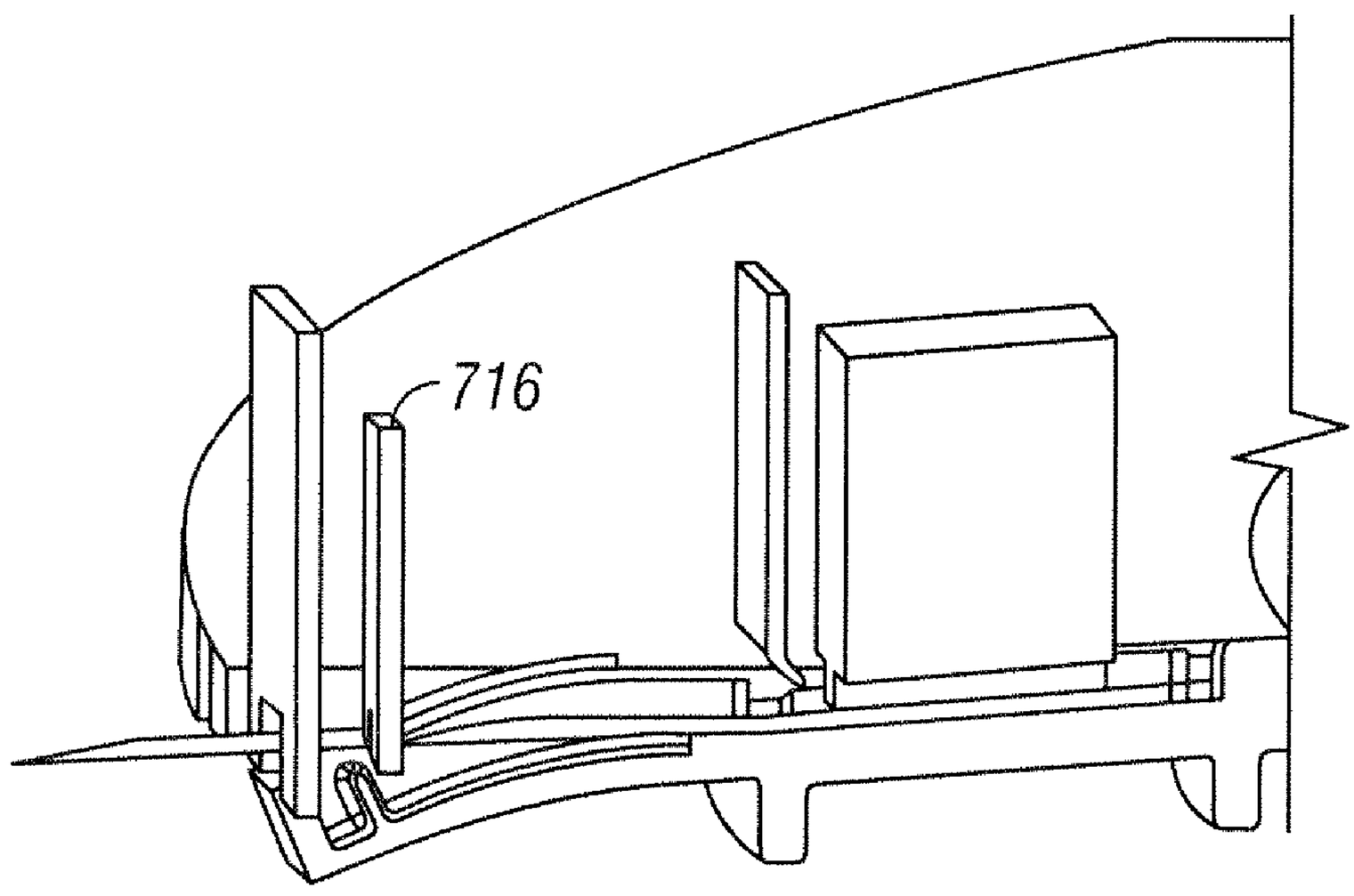

FIG. 69G

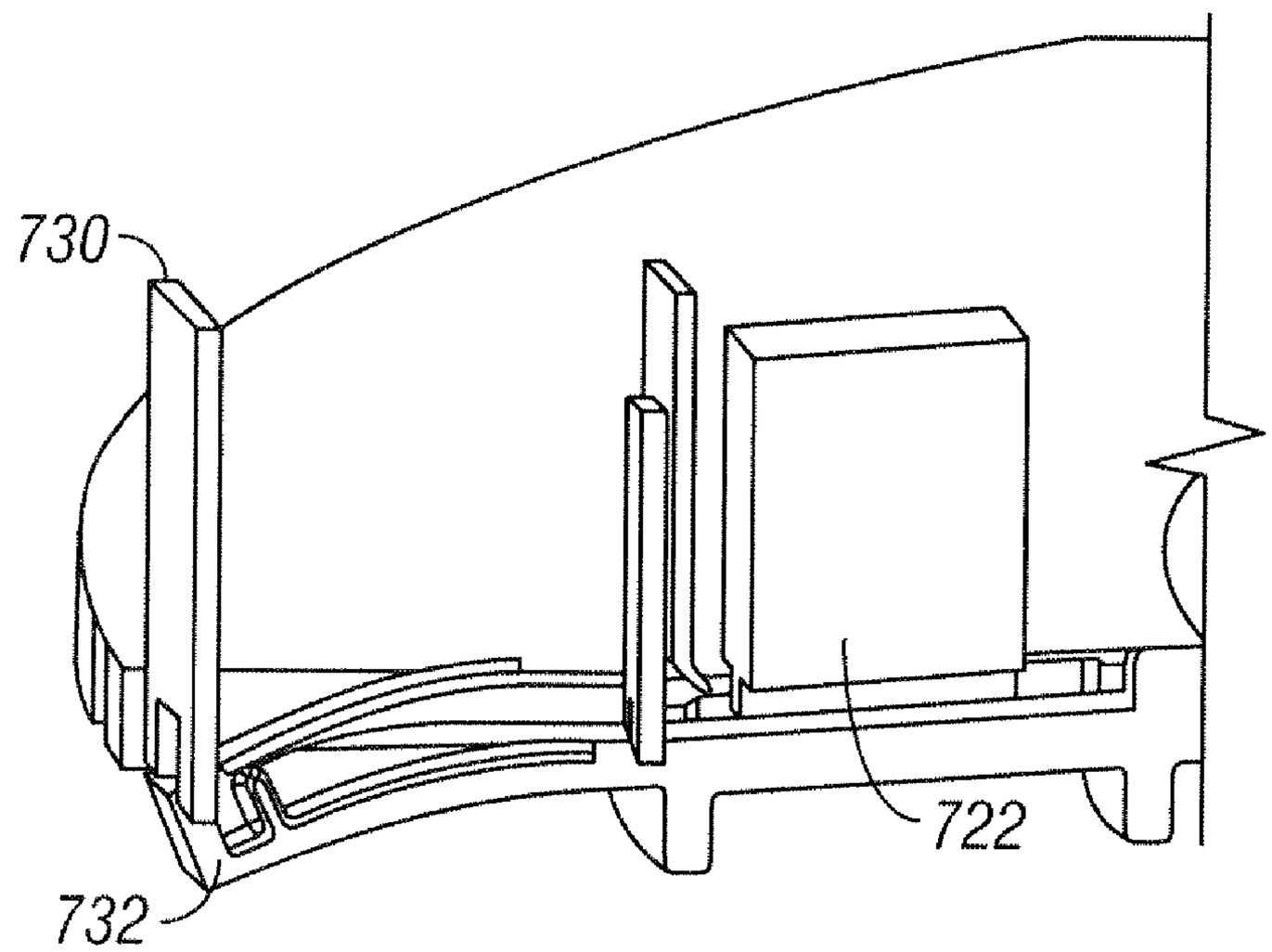

FIG. 69H

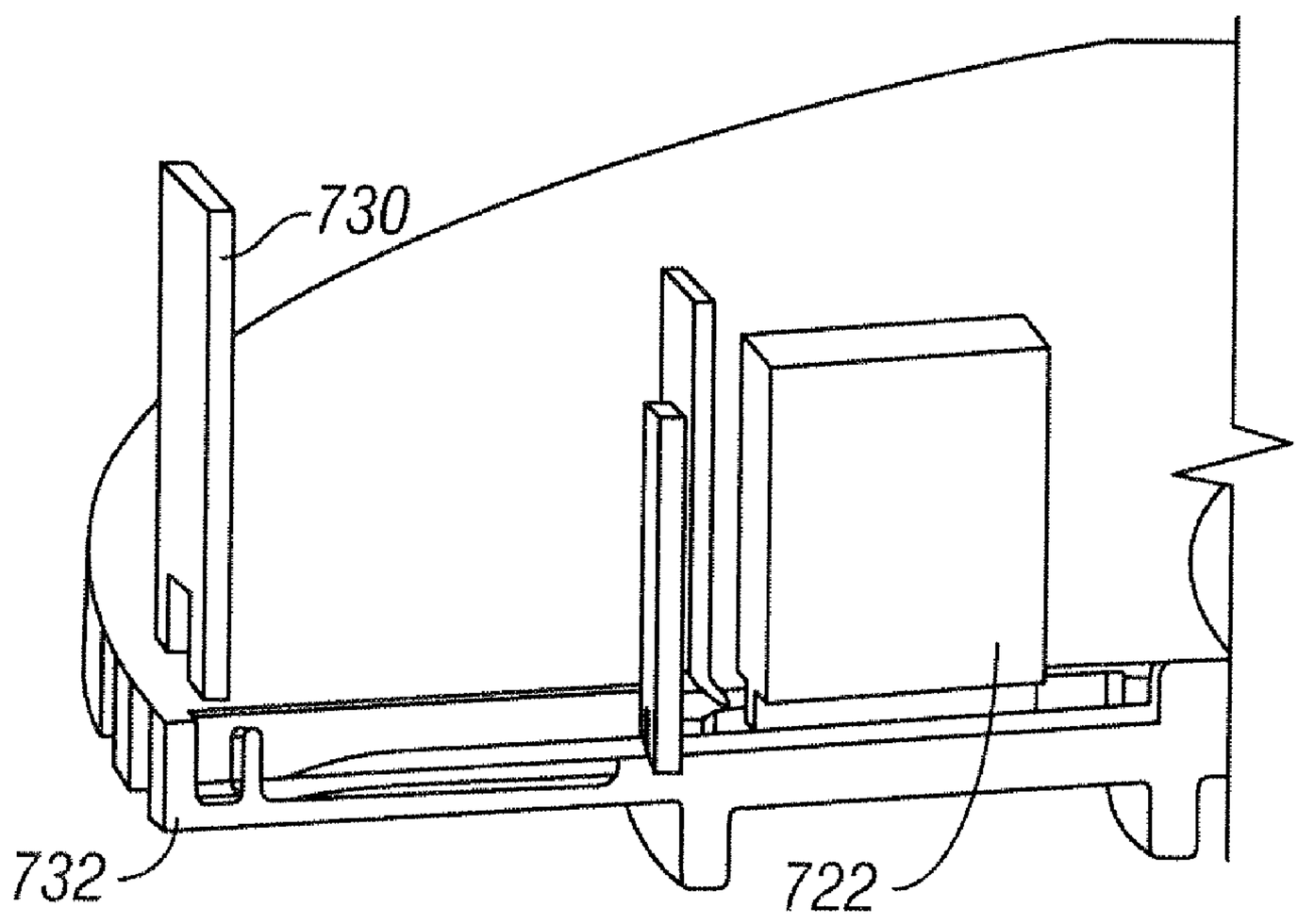

FIG. 69I

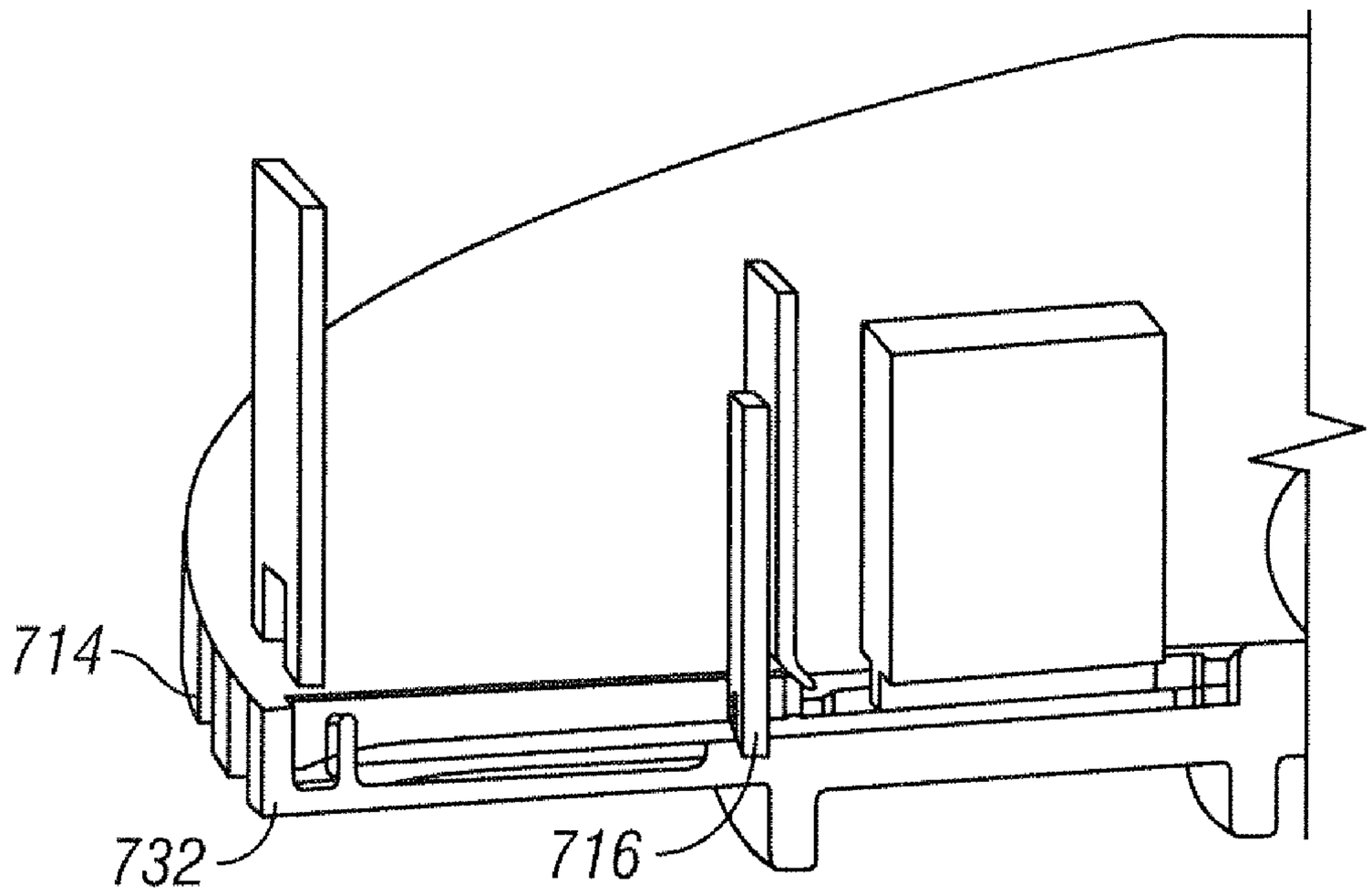

FIG. 69J

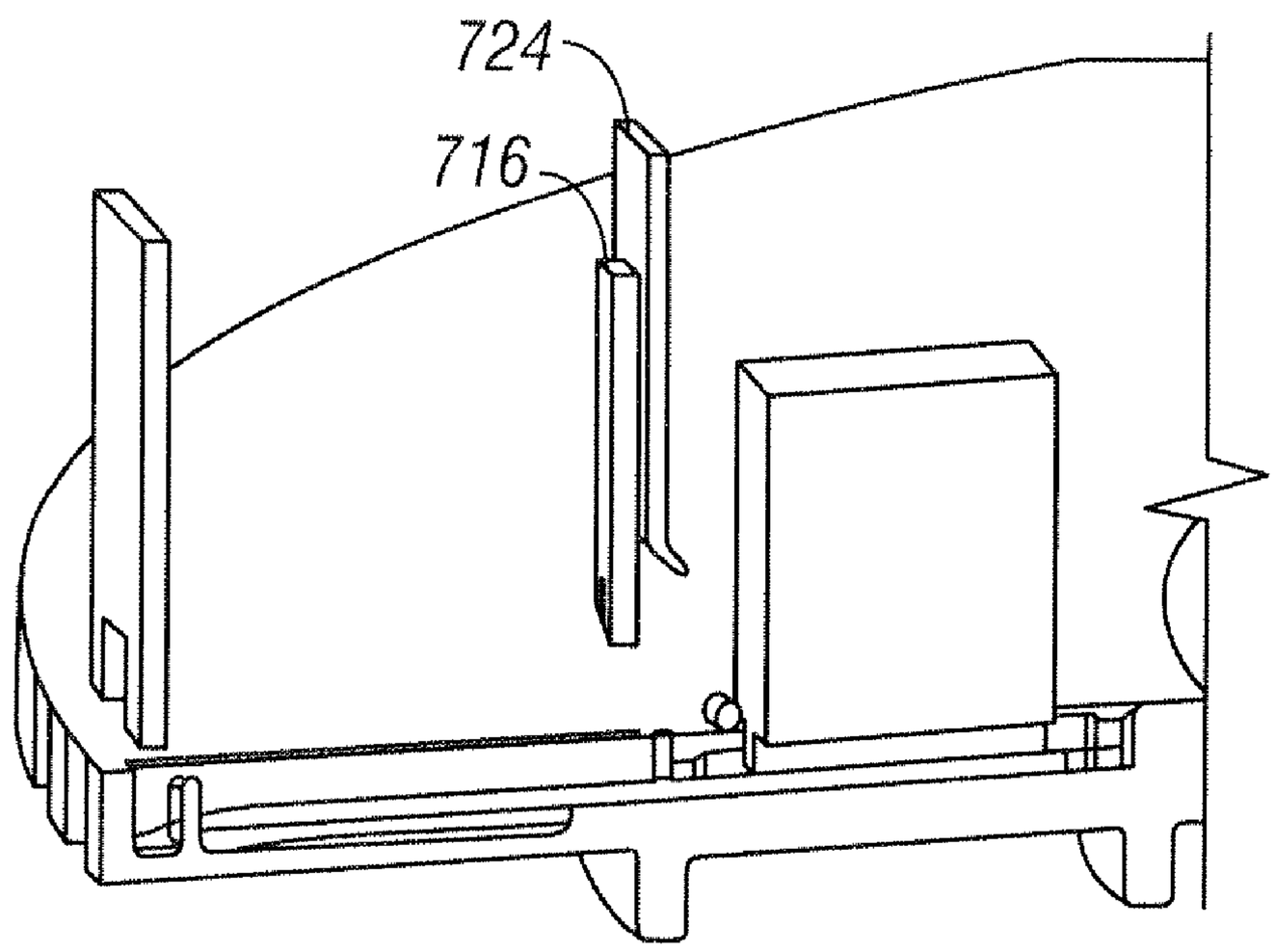

FIG. 69K

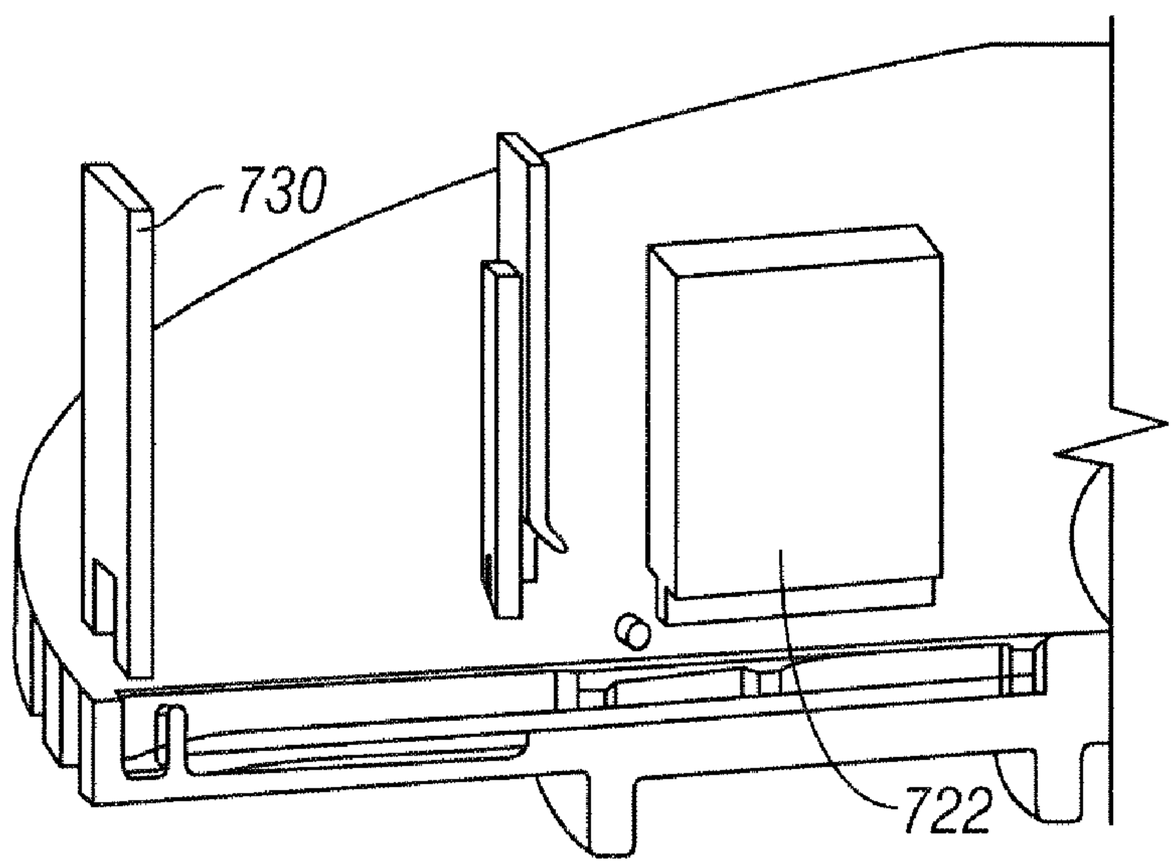

FIG. 69L

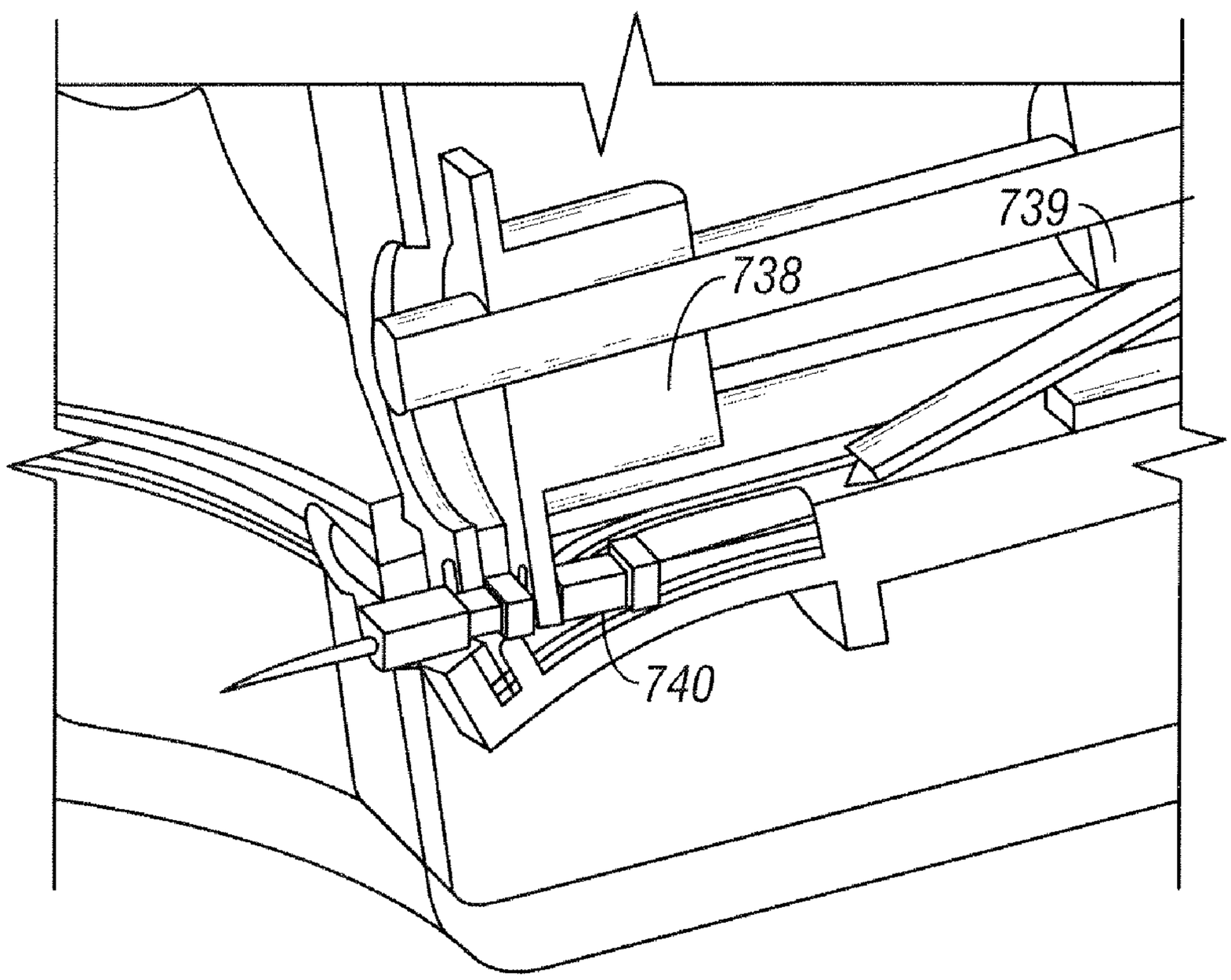

FIG. 70

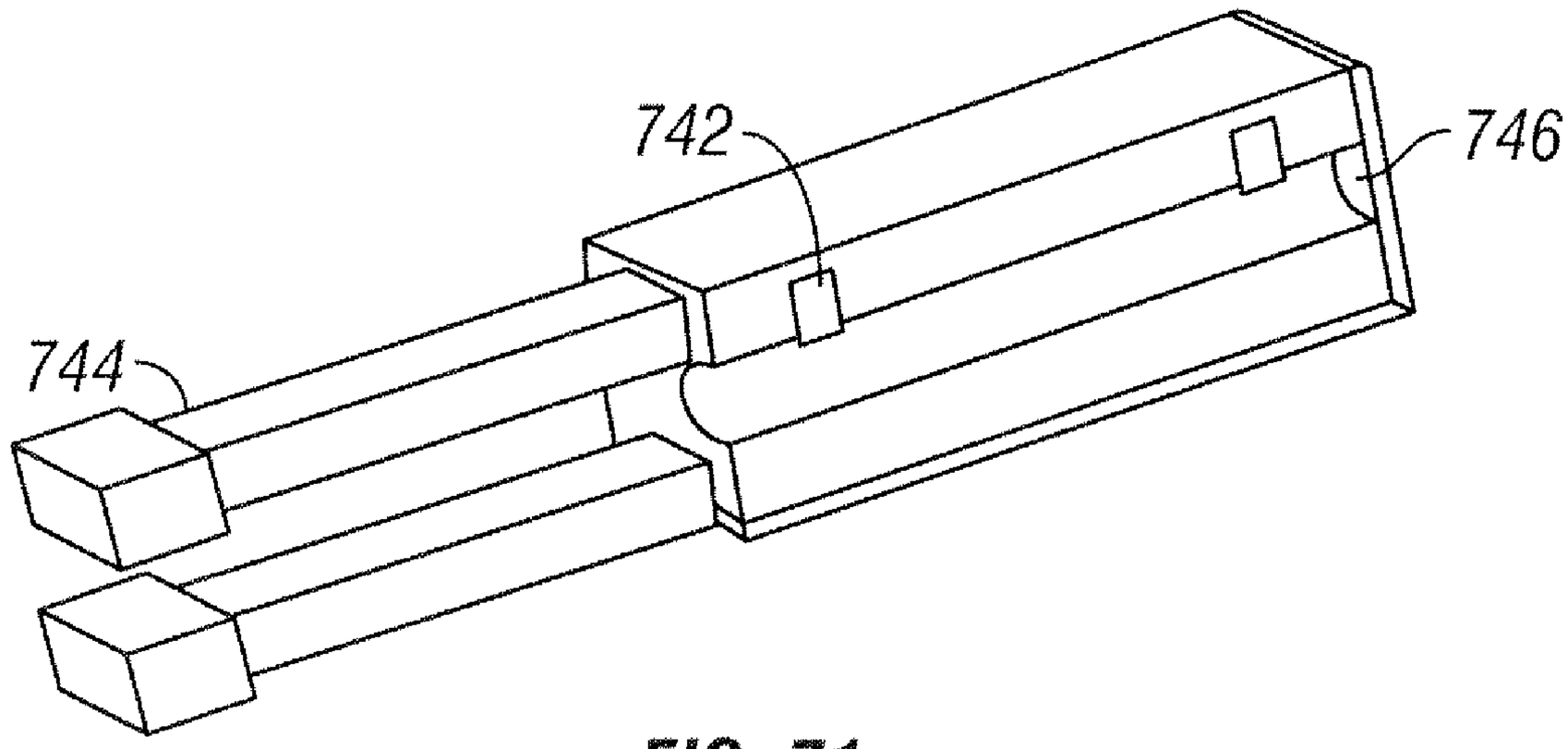

FIG. 71

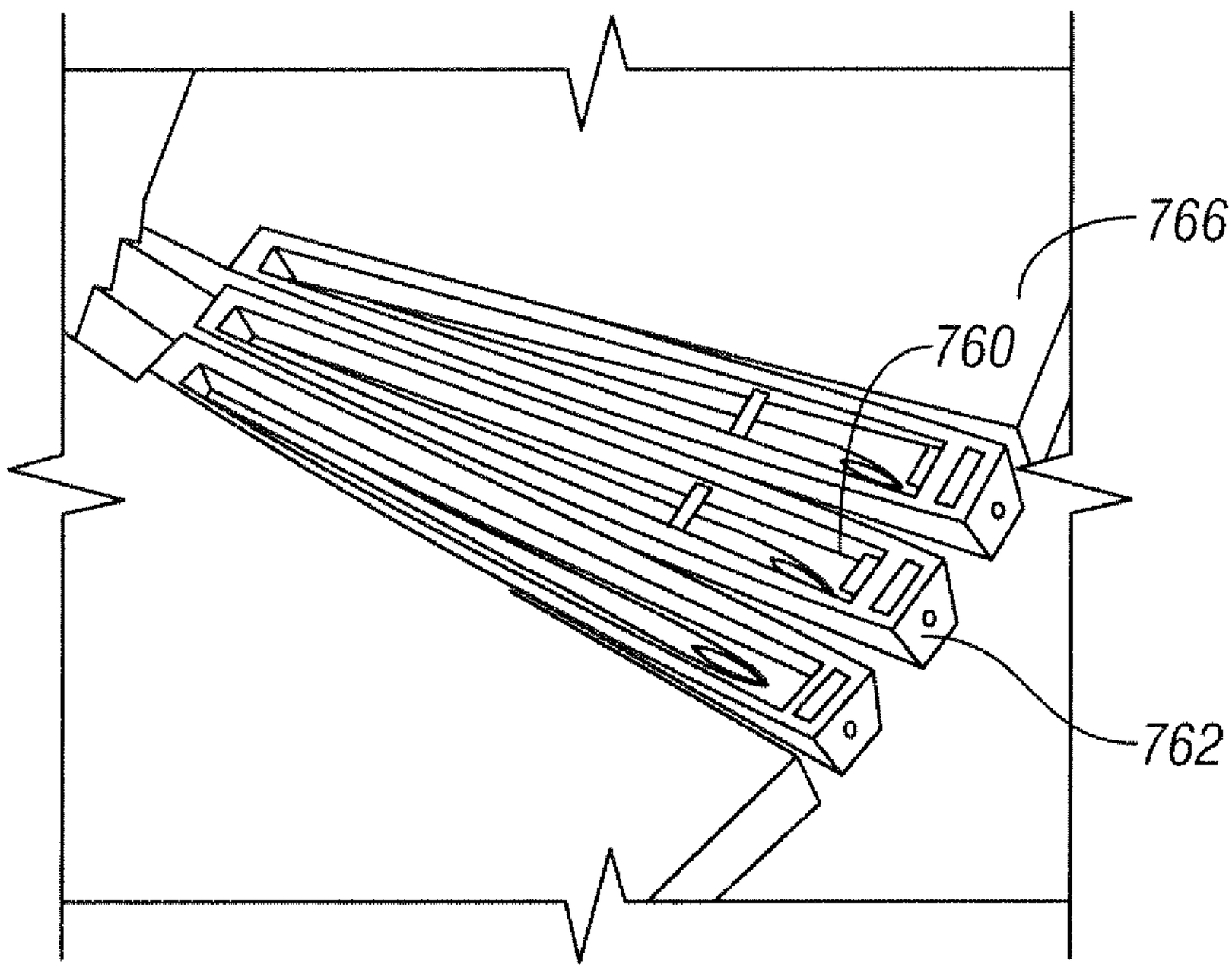

FIG. 72

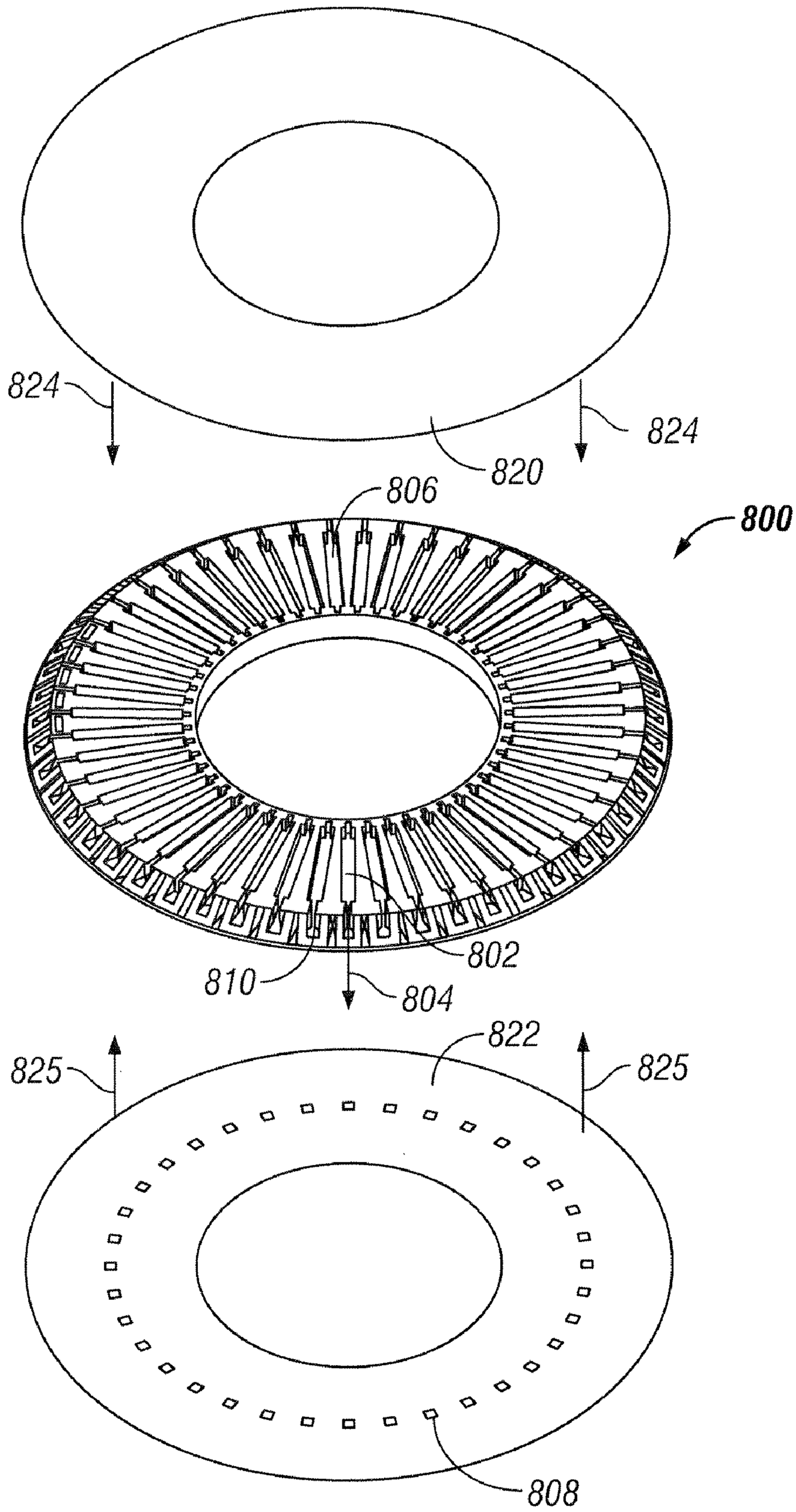

FIG. 73

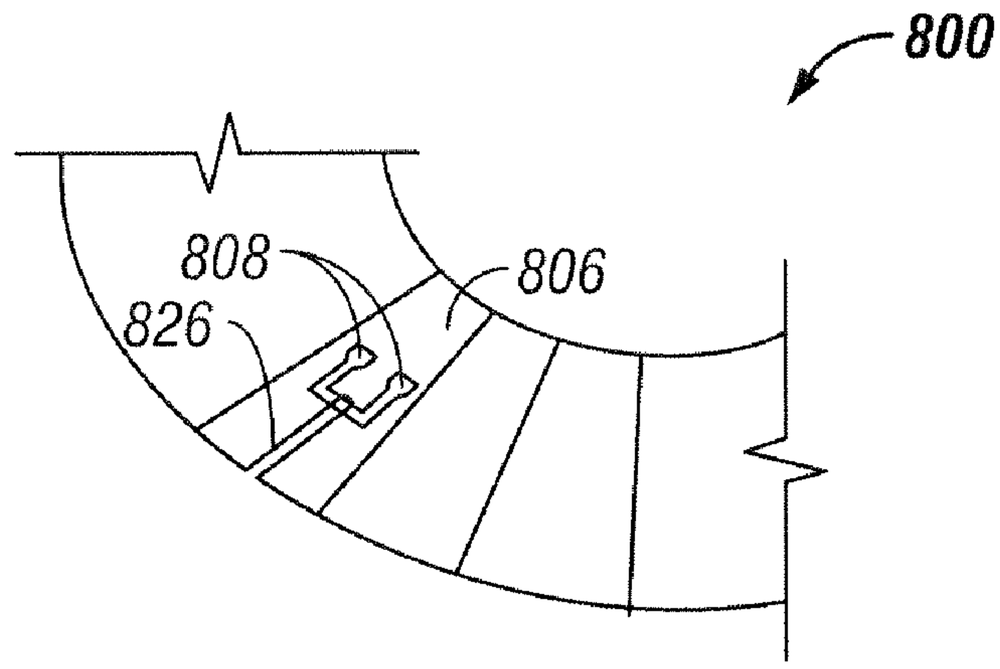

FIG. 74

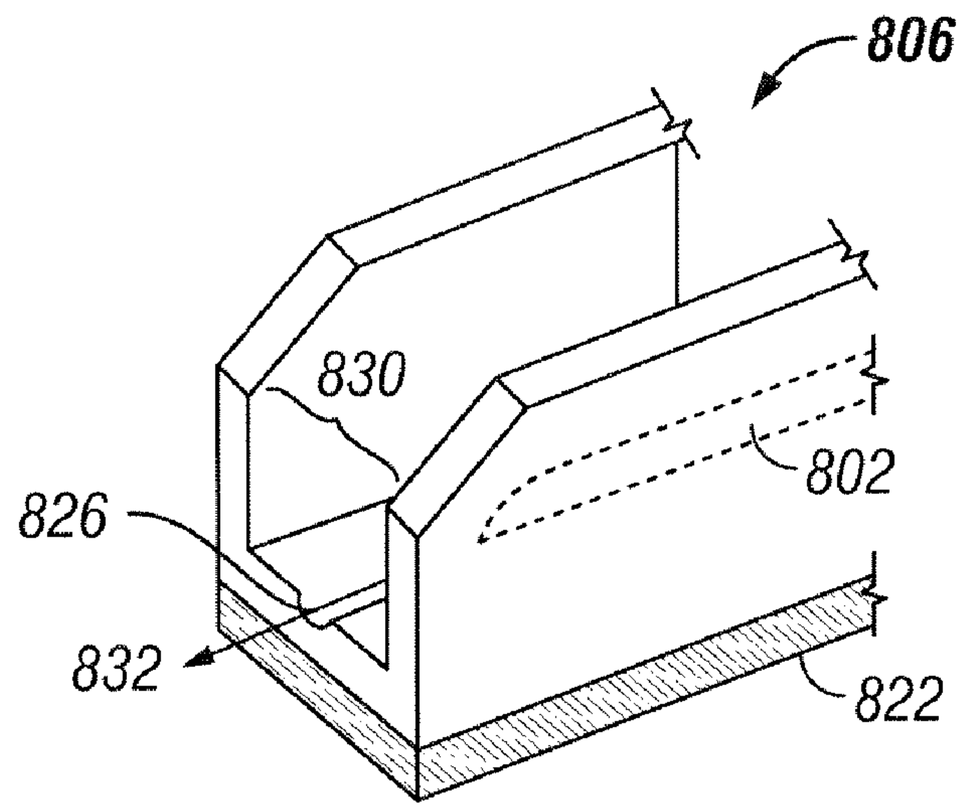

FIG. 75

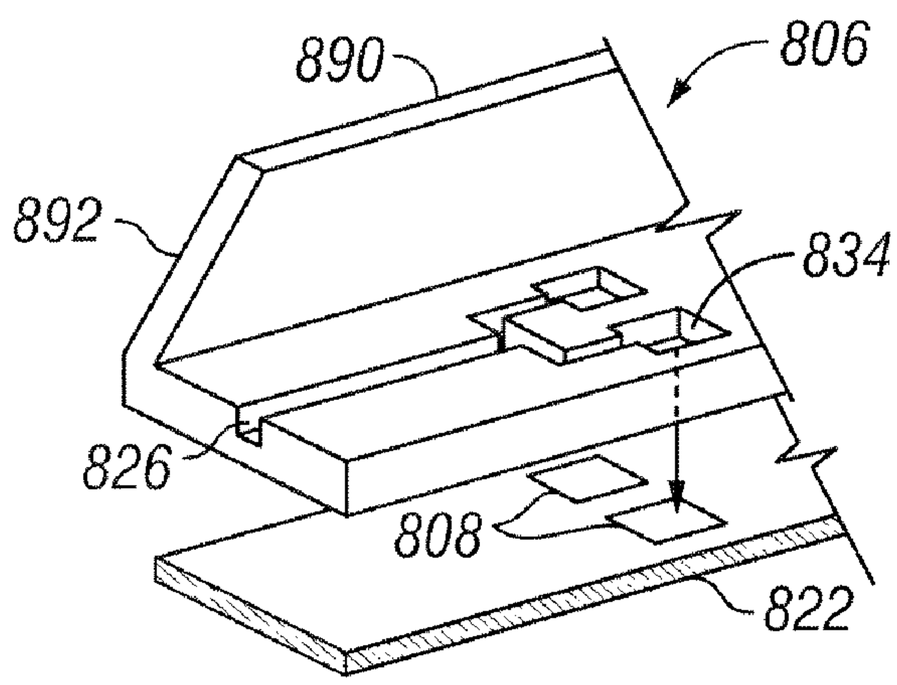

FIG. 76

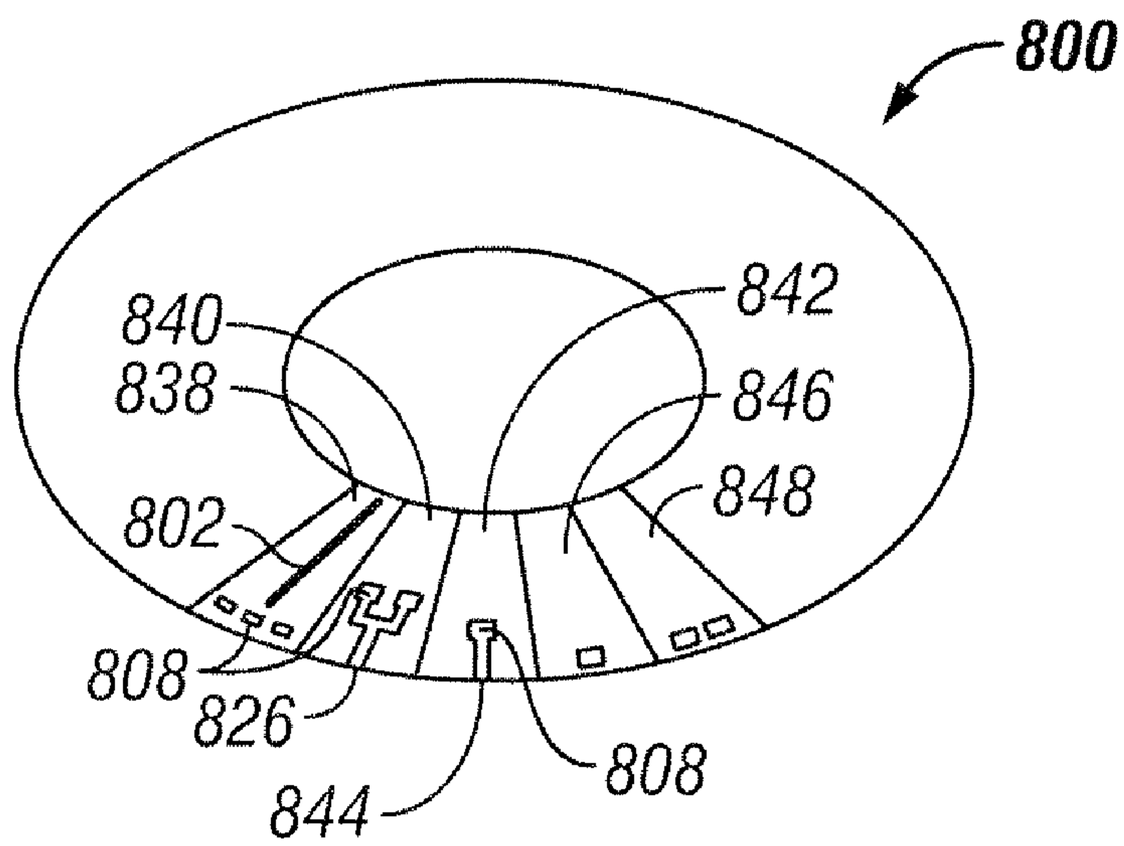

FIG. 77

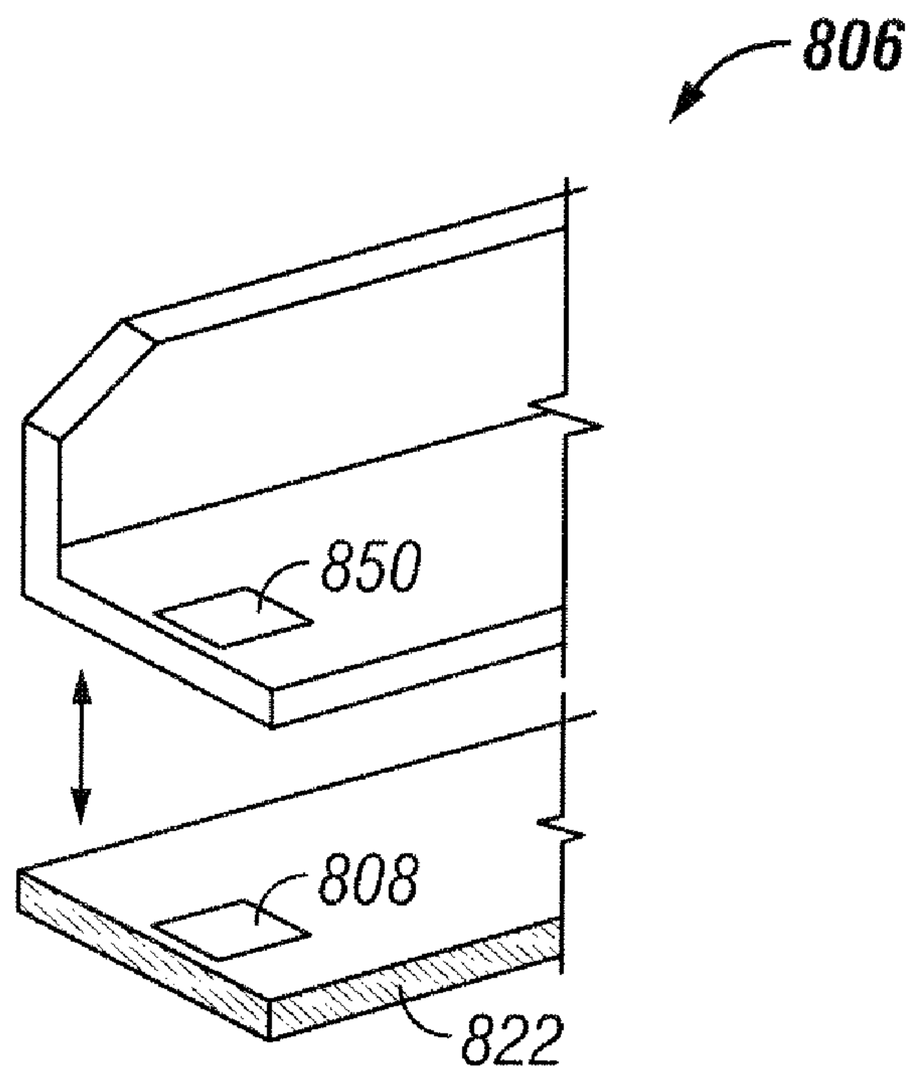

FIG. 78

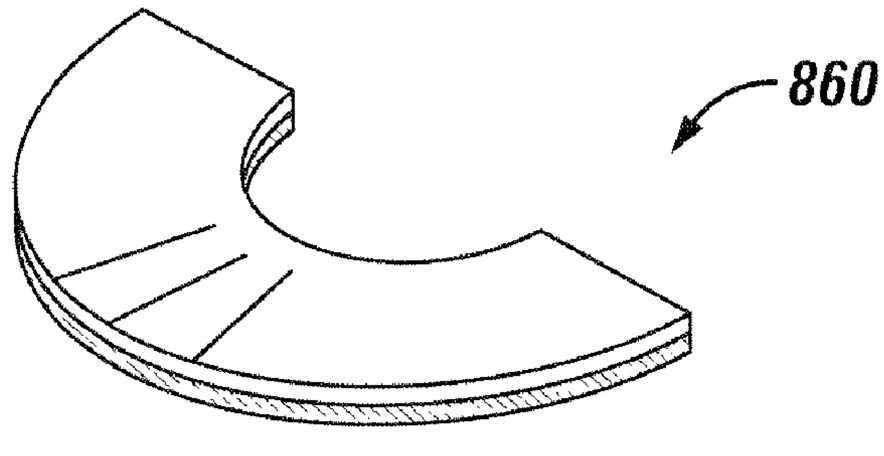

FIG. 79

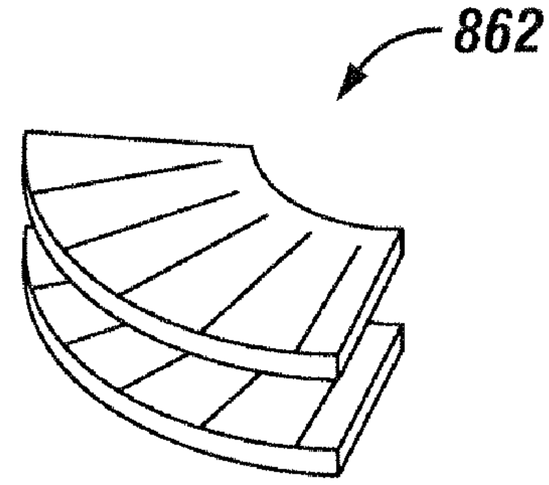

FIG. 80

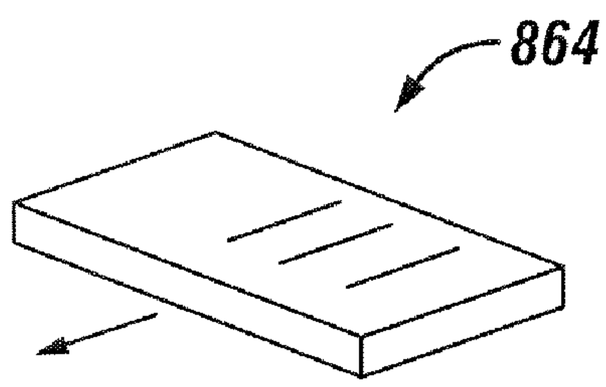

FIG. 81

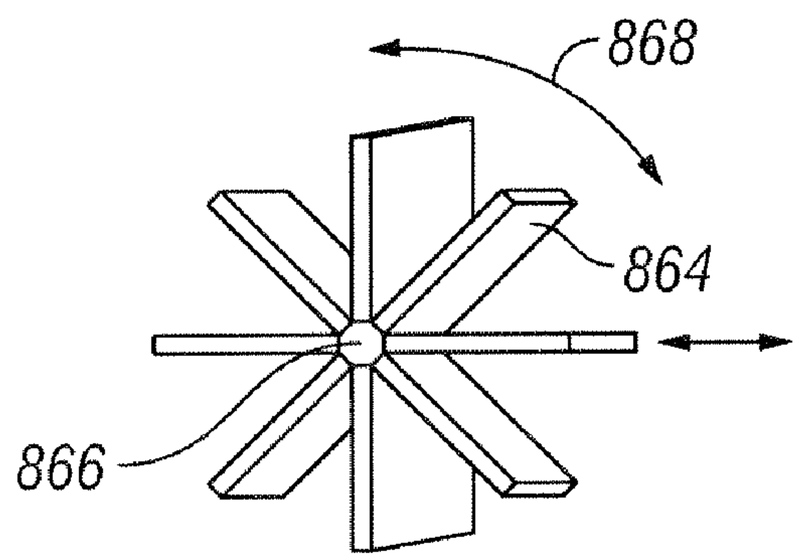

FIG. 82

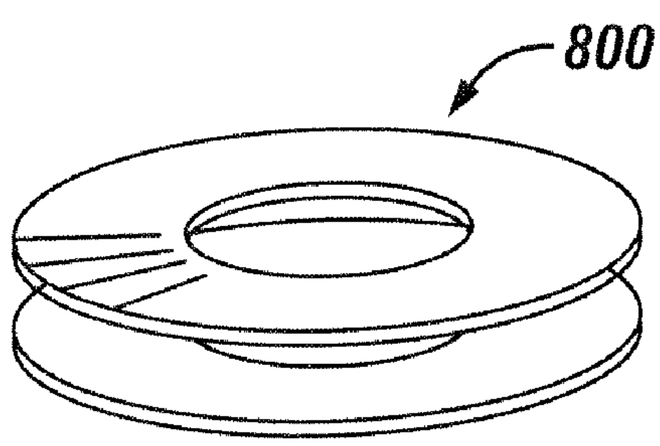

FIG. 83

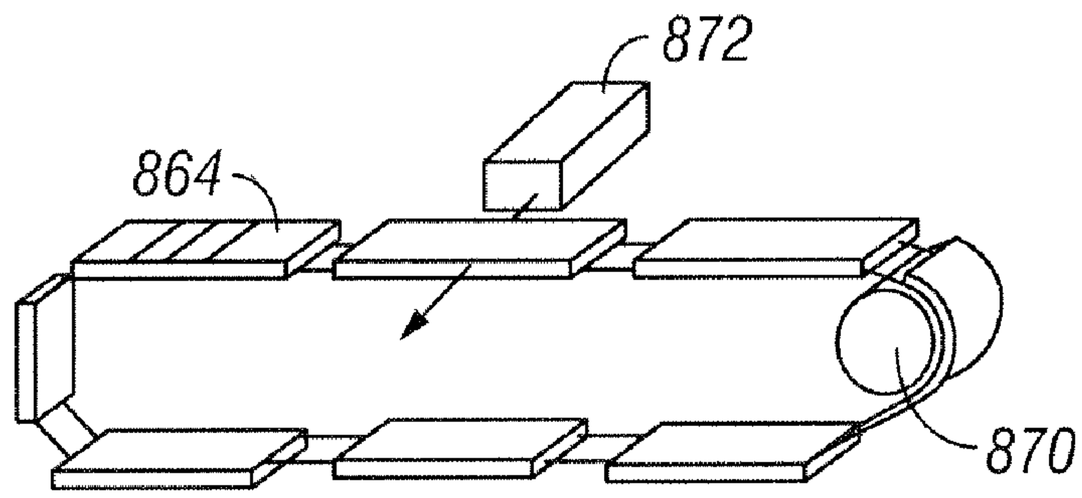

FIG. 84

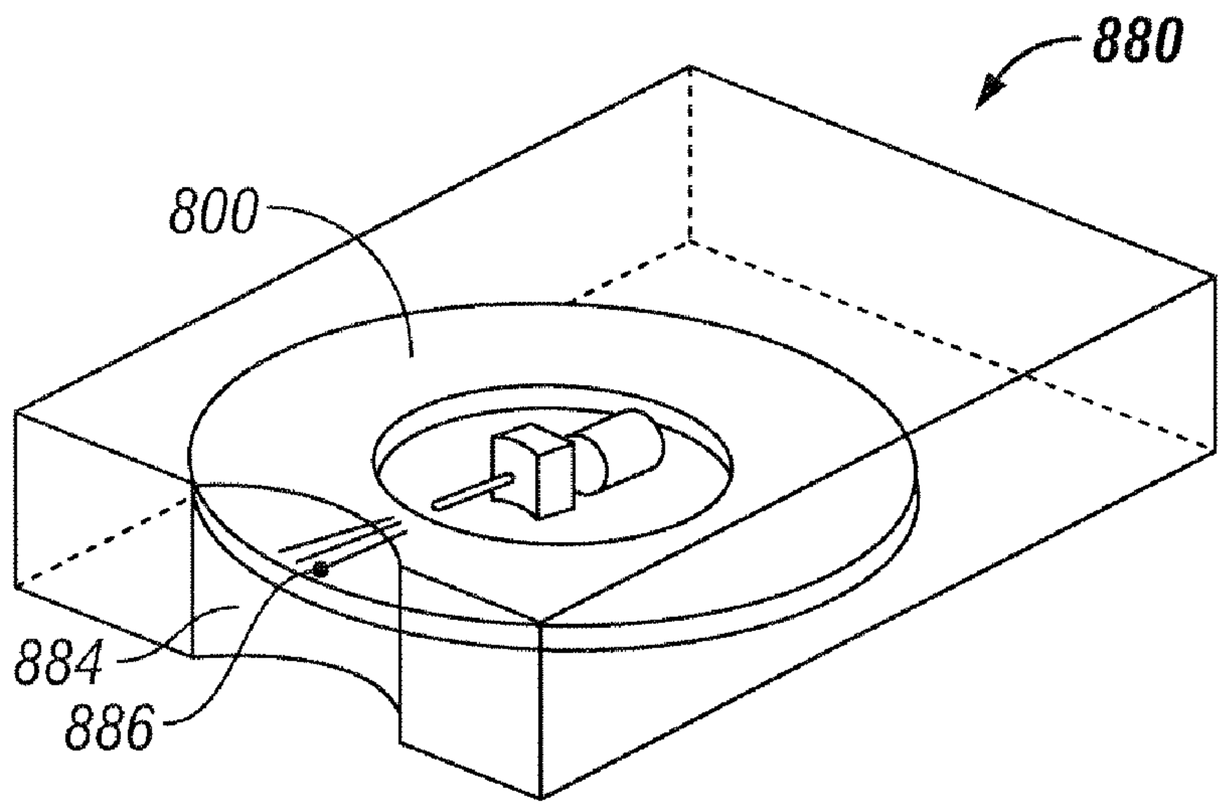

FIG. 85

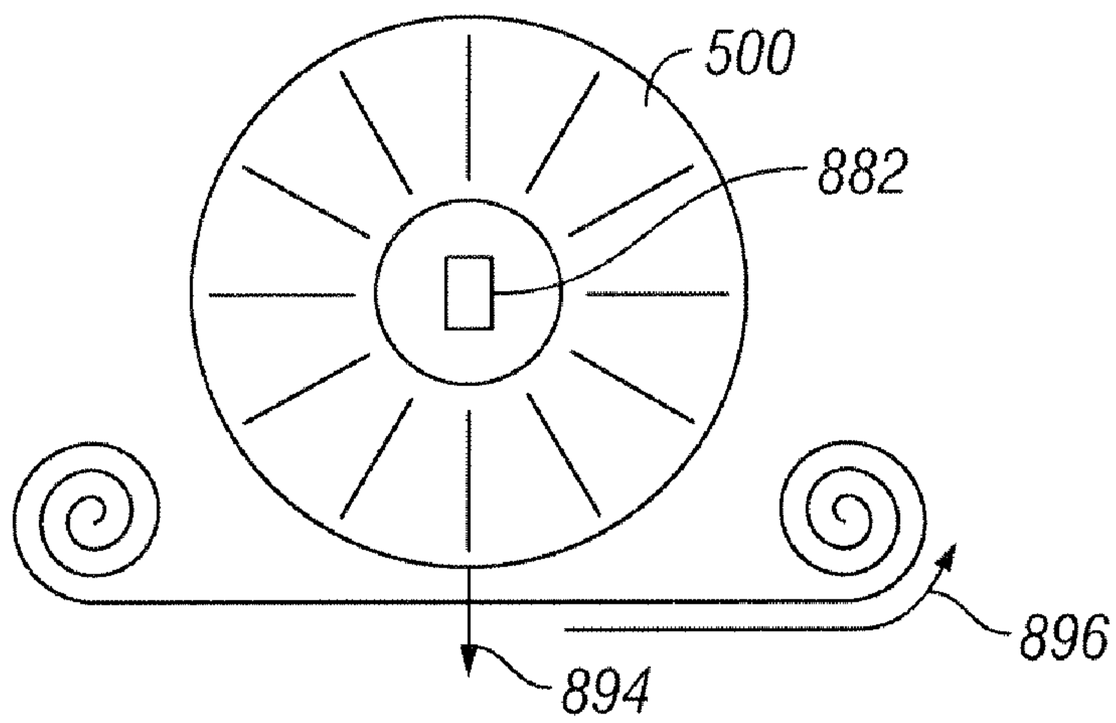

FIG. 86

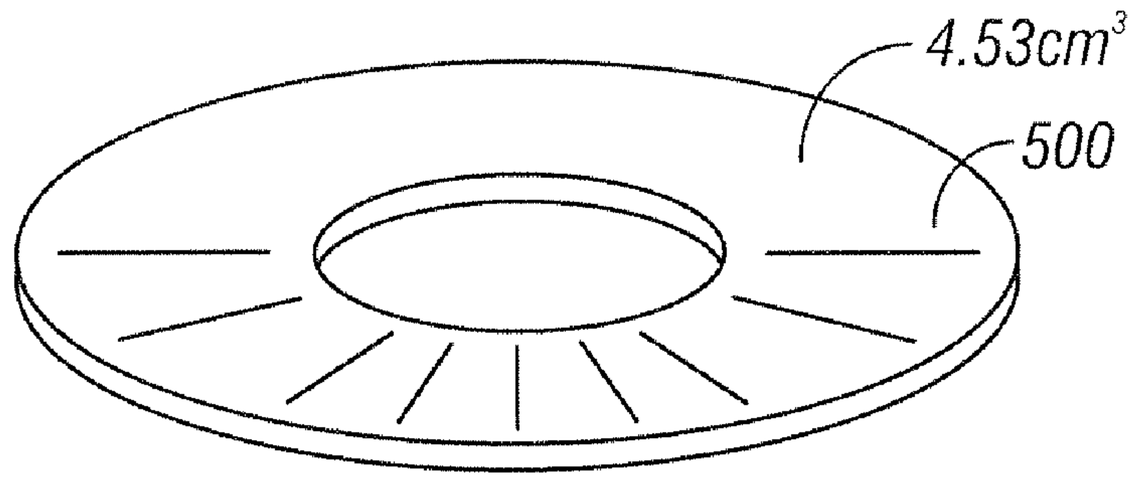

FIG. 87A

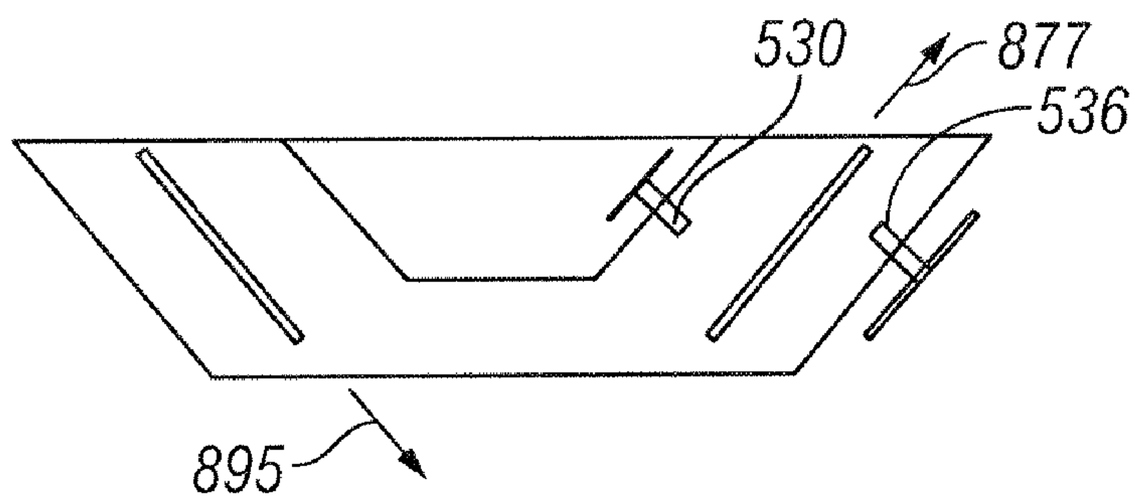

FIG. 87B

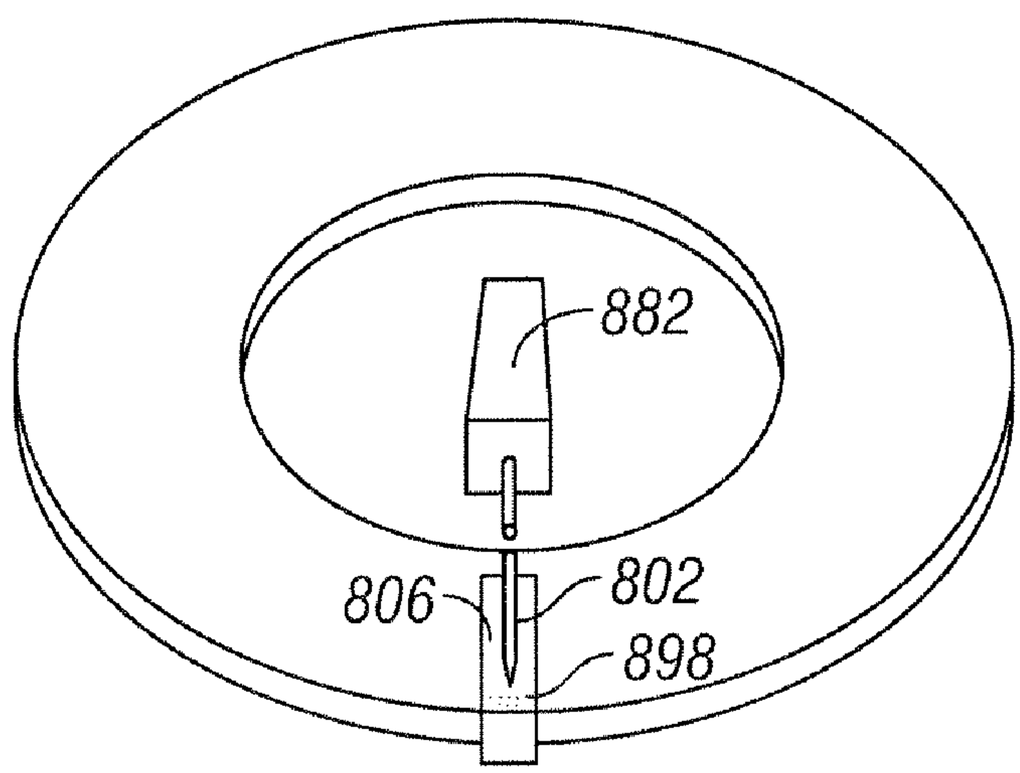

FIG. 88

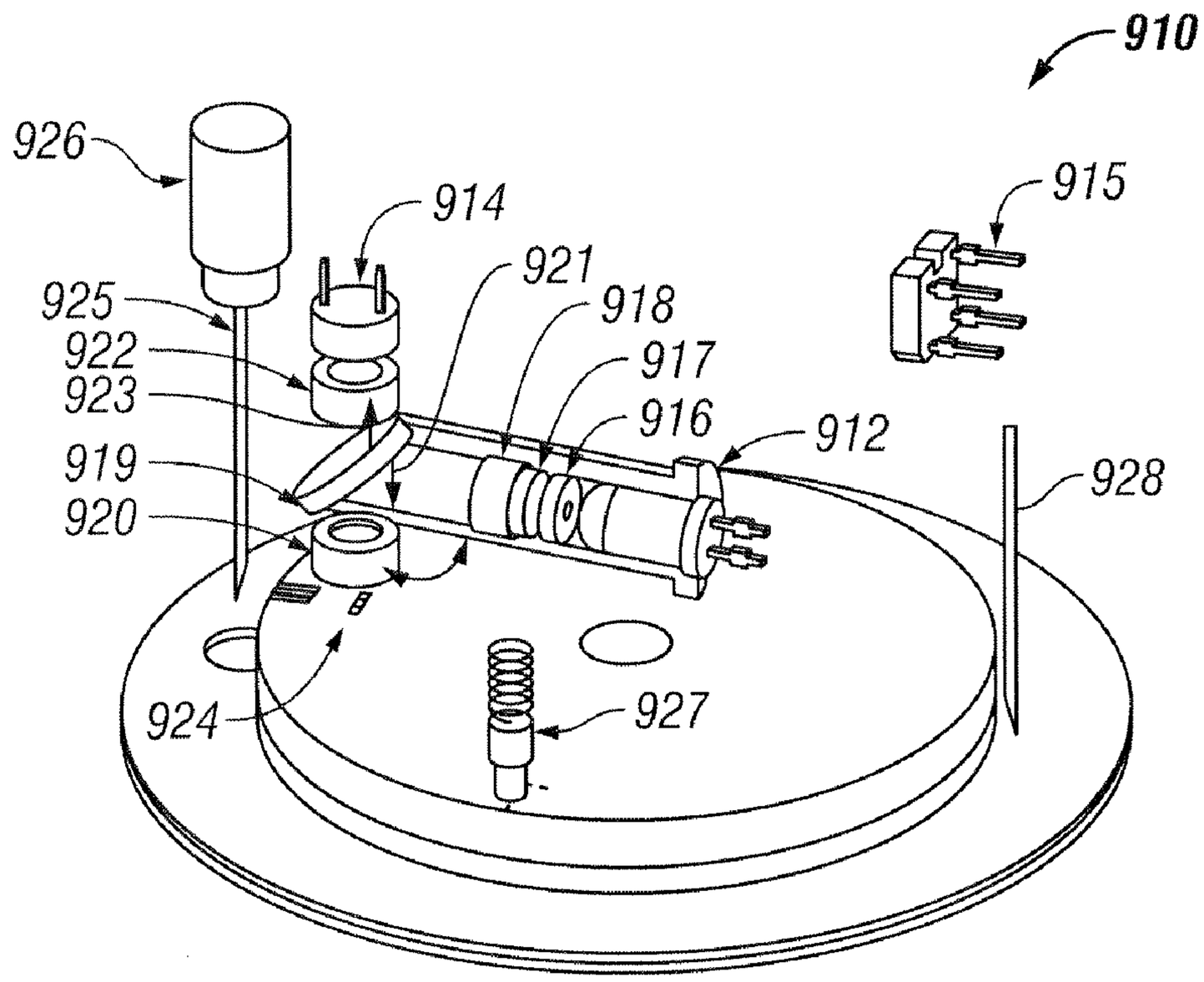
910
926
914
915
921
925
918
922
917
923
916
912
919
928
920
924
927

FIG. 89

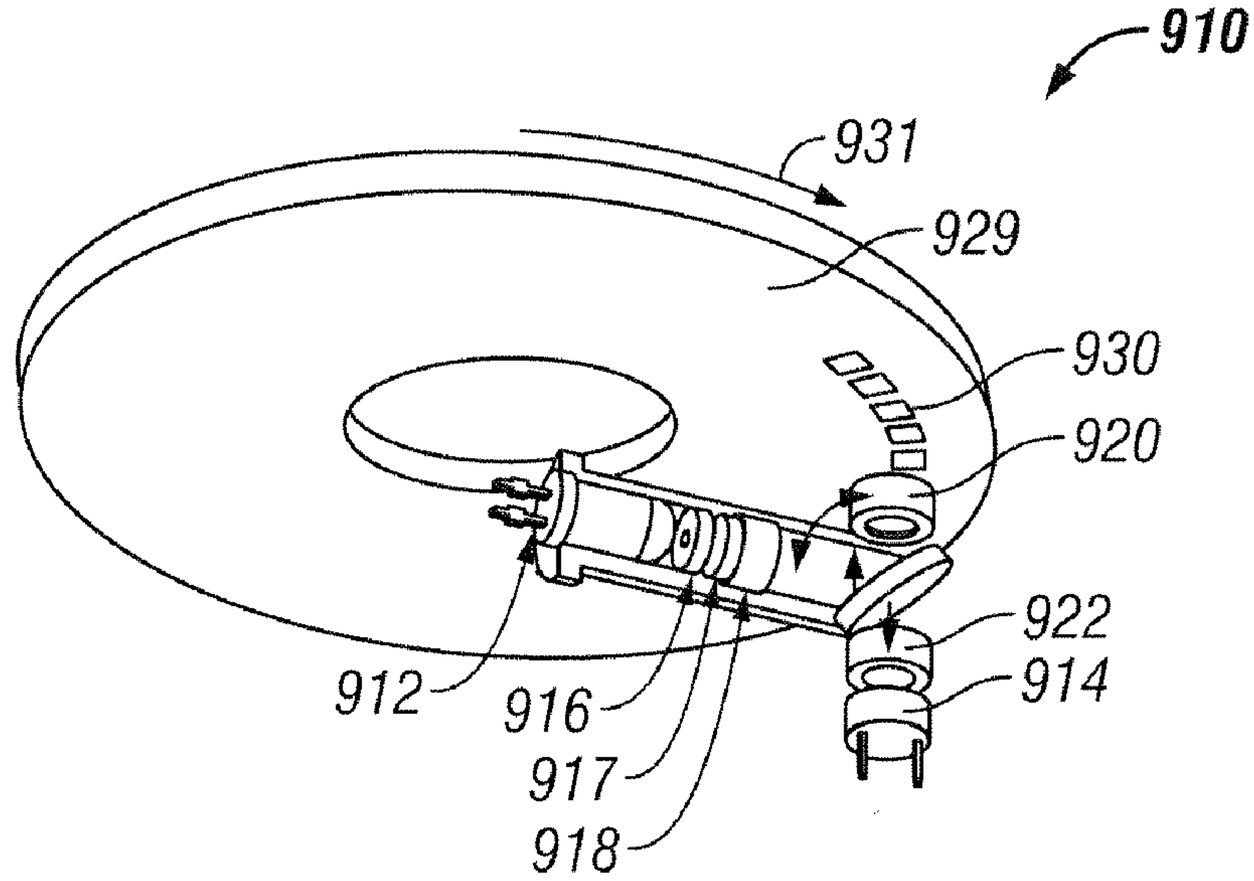
910
931
929
930
920
922
914
912
916
917
918

FIG. 90

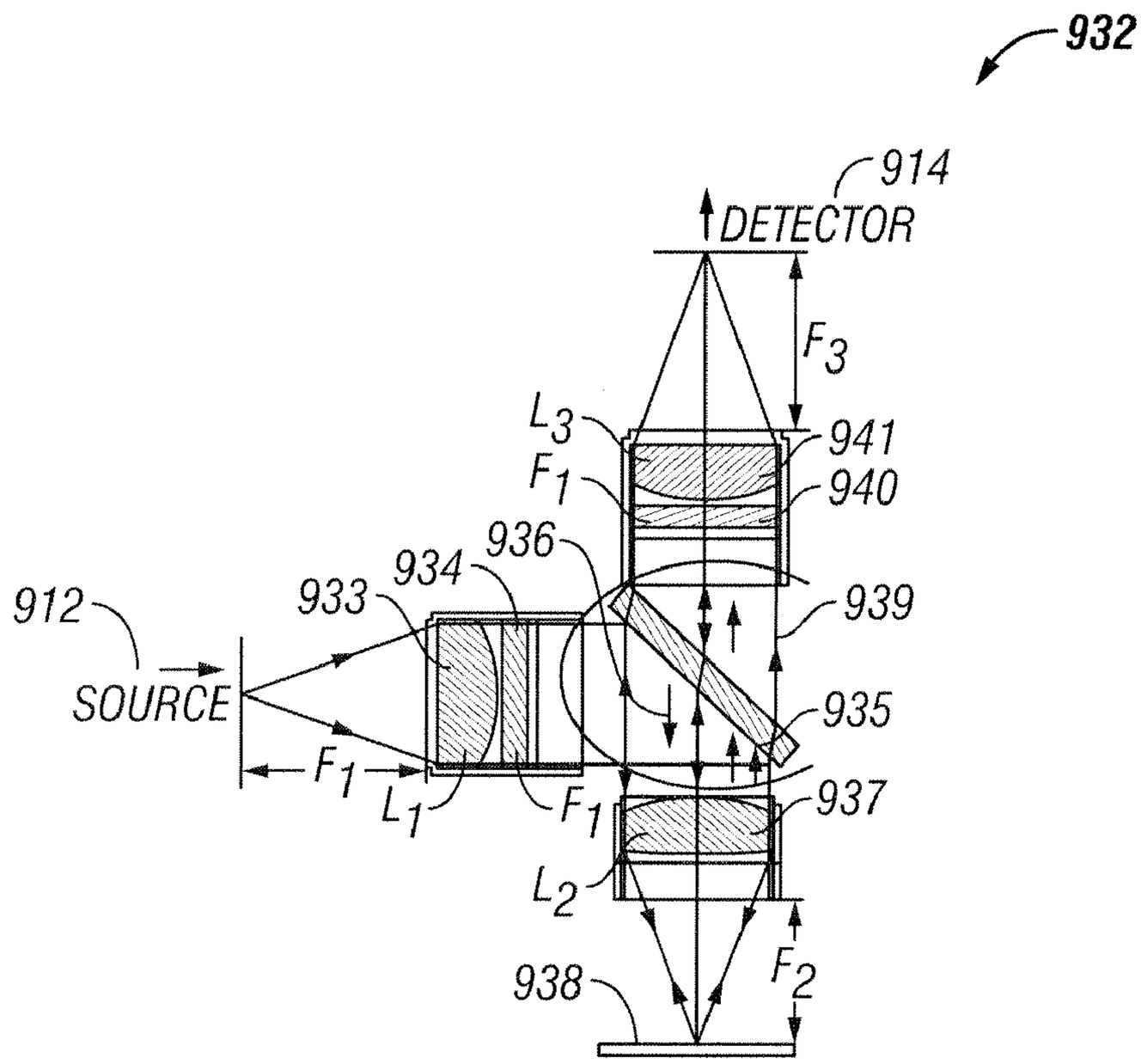
932
914
DETECTOR
F3
L3
941
F1
940
936
934
933
912
939
SOURCE
935
F1
L1
F1
937
L2
F2
938

FIG. 91

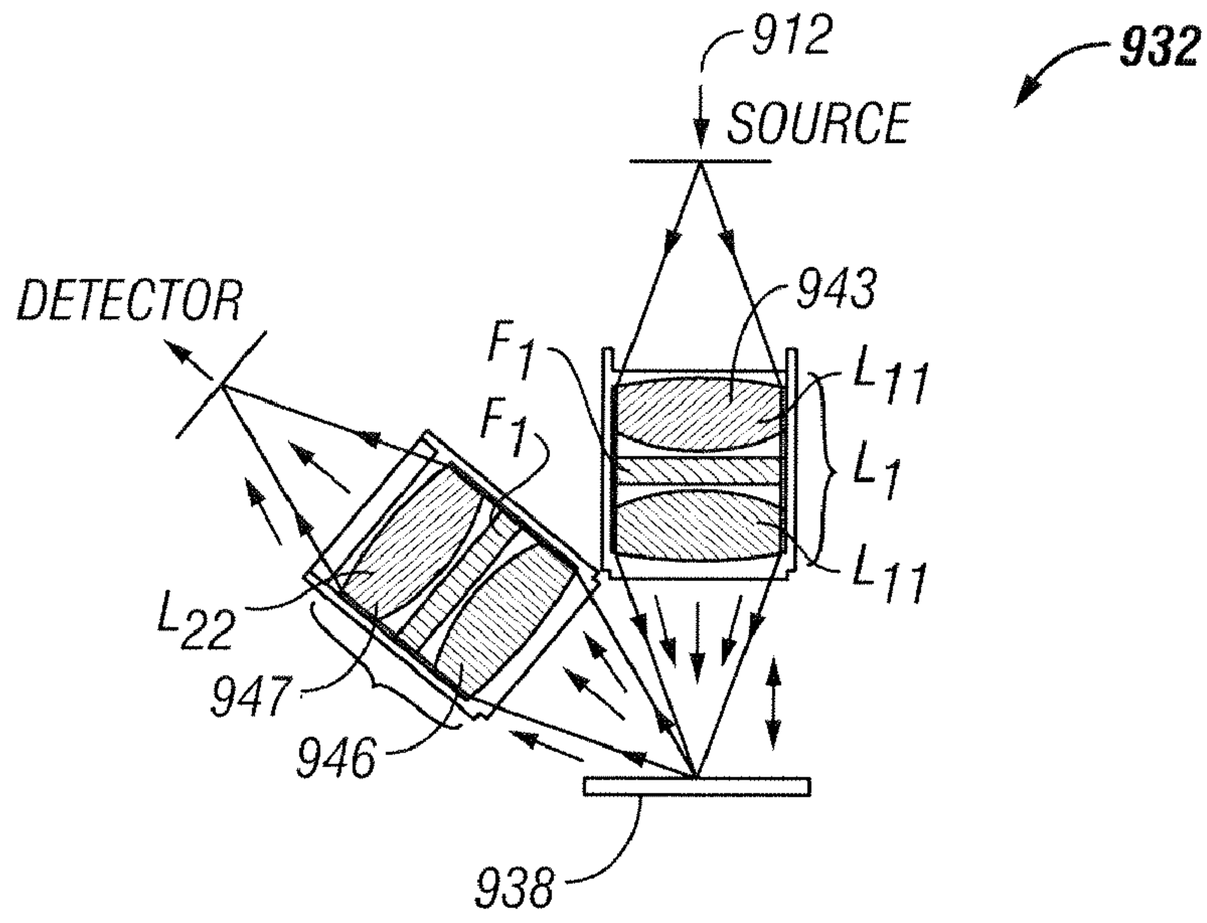
912
932
SOURCE
943
DETECTOR
F1
L11
F1
L1
L11
L22
947
946
938

FIG. 92

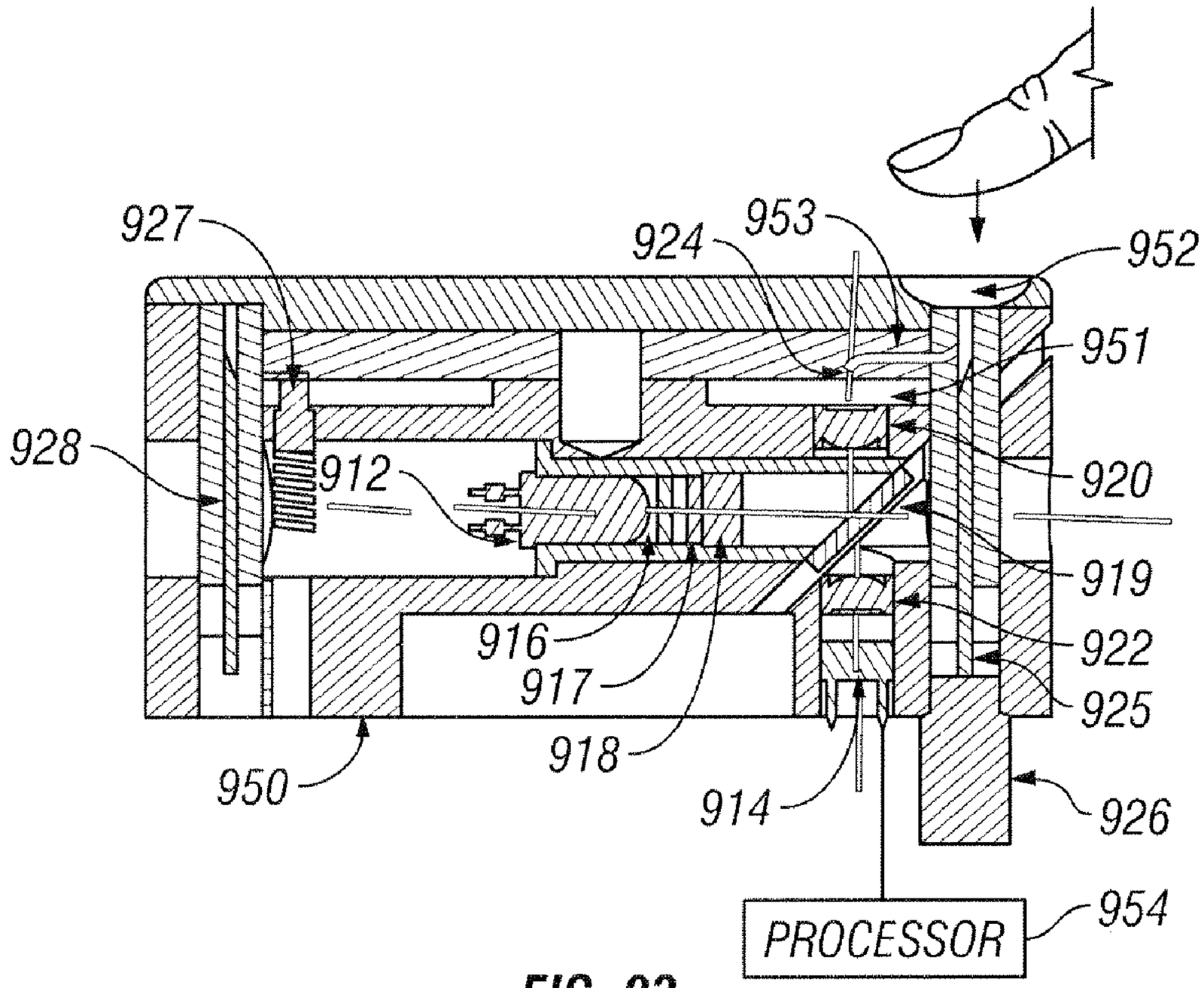
927
924
953
952
951
928
912
920
919
916
917
922
925
918
950
914
926
PROCESSOR
954

FIG. 93

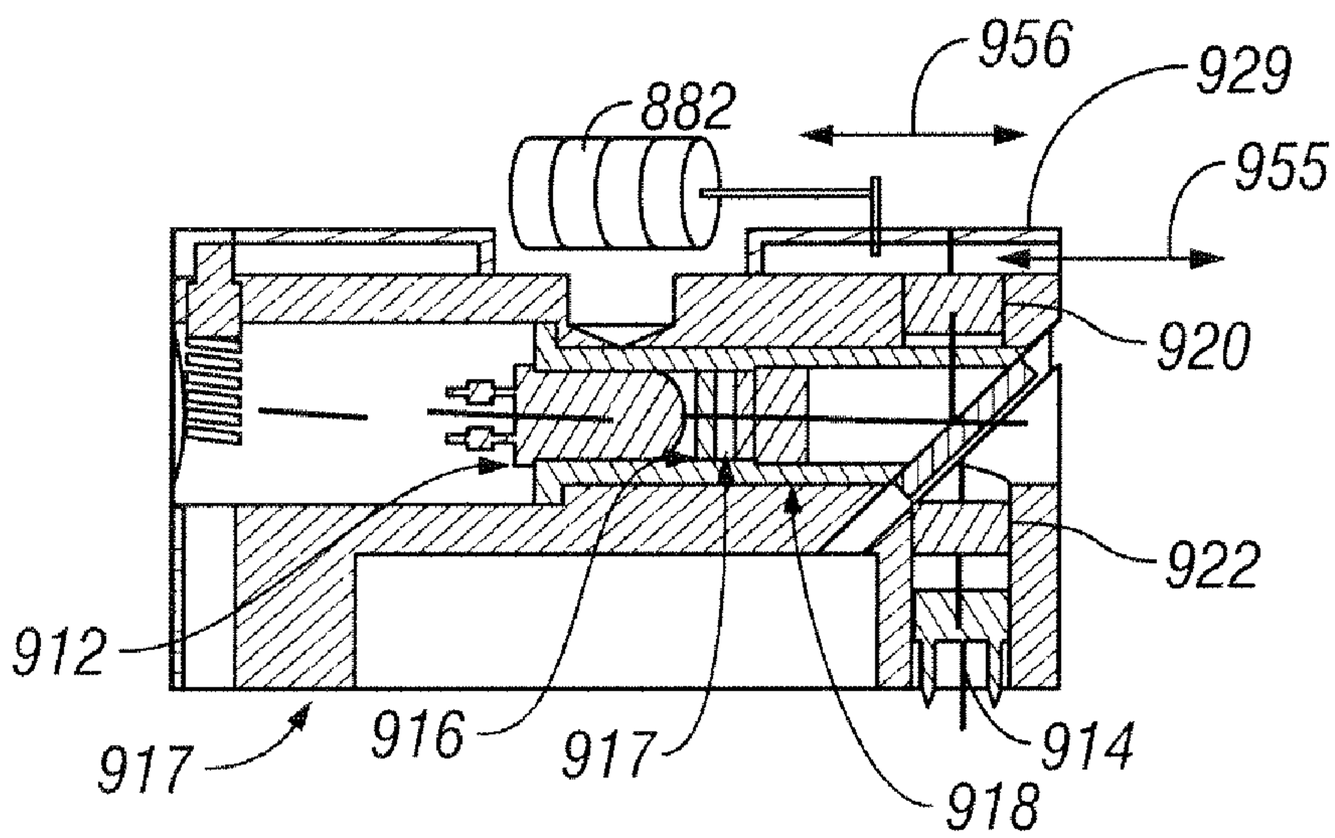
956
929
882
955
920
922
912
917
916
917
914
918

FIG. 94

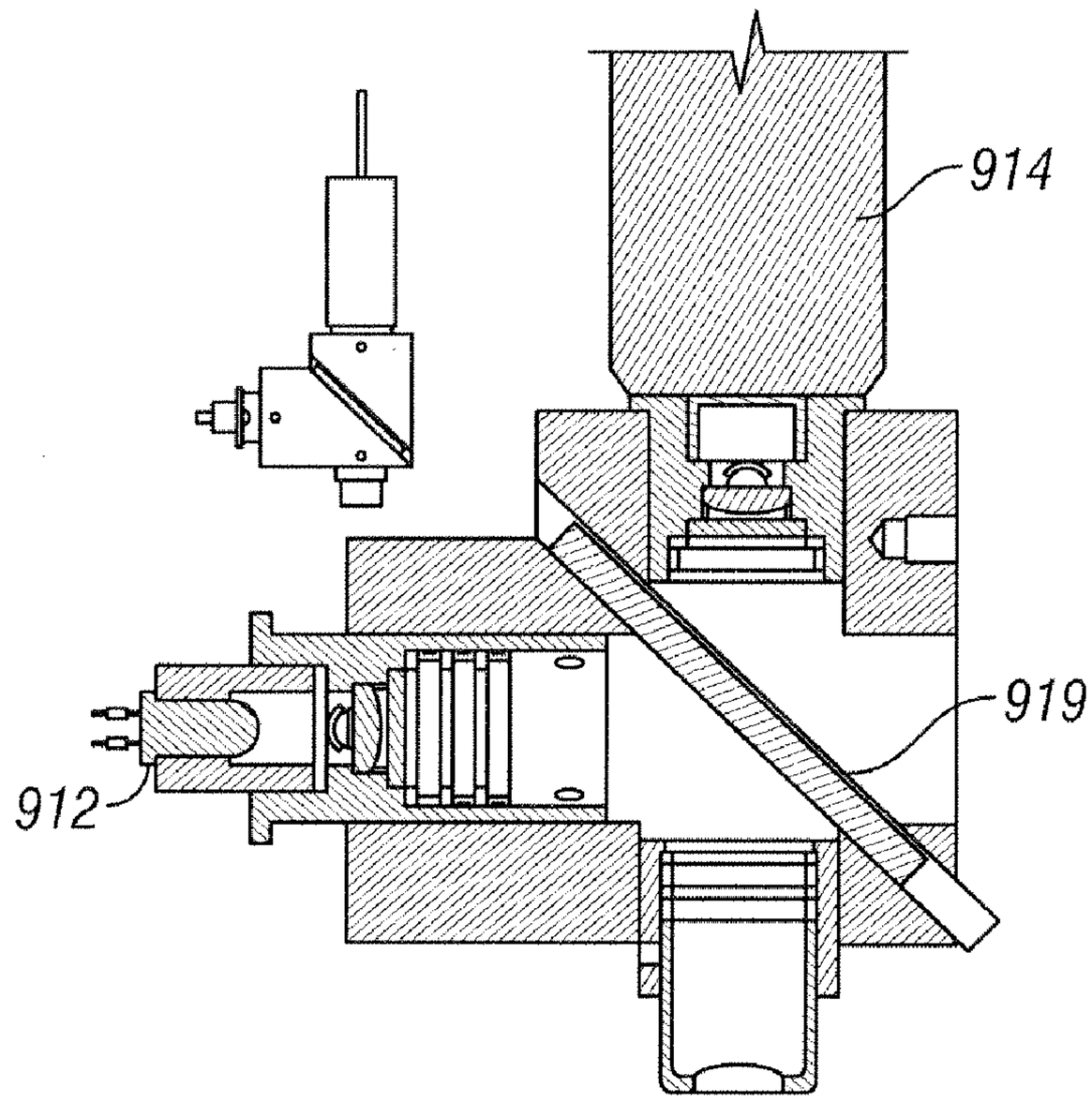

FIG. 95

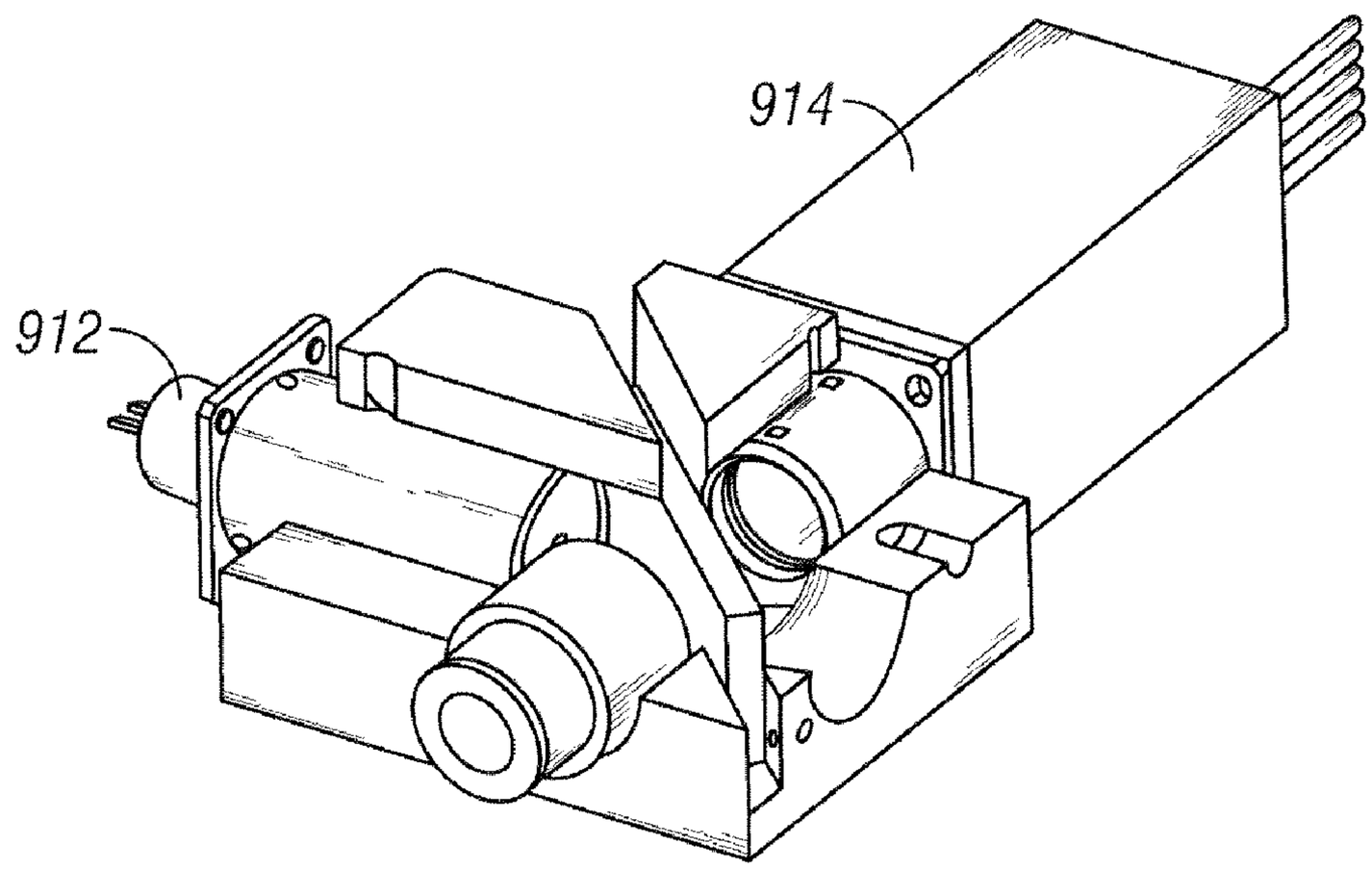

FIG. 96

METHOD AND APPARATUS FOR MULTI-USE BODY FLUID SAMPLING DEVICE WITH STERILITY BARRIER RELEASE

This application is a continuation of U.S. Ser. No. 11/627,252 filed Jan. 25, 2007, U.S. Pat. No. 7,875,047 which is a divisional of U.S. Ser. No. 10/323,623 filed Dec. 18, 2002 (now U.S. Pat. No. 7,226,461 issued Jun. 5, 2007 which is a continuation-in-part of U.S. Ser. No. 10/127,395, filed Apr. 19, 2002 (now U.S. Pat. No. 7,025,774 issued Apr. 11, 2006). Said U.S. Ser. No. 10/127,395 also claiming the benefit of U.S. Ser. No. 10/237,261, filed Sep. 5, 2002 (now U.S. Pat. No. 7,344,507 issued Mar. 18, 2008); U.S. Ser. No. 60/393,706, filed Jul. 1, 2002; U.S. Ser. No. 60/393,707, filed Jul. 1, 2002; U.S. Ser. No. 60/422,988, filed Nov. 1, 2002; and U.S. Ser. No. 60/424,429, filed Nov. 6, 2002. All applications listed above are incorporated herein by reference for all purposes.

BACKGROUND OF THE INVENTION

Lancing devices are known in the medical health-care products industry for piercing the skin to produce blood for analysis. Typically, a drop of blood for this type of analysis is obtained by making a small incision in the fingertip, creating a small wound, which generates a small blood droplet on the surface of the skin.

Early methods of lancing included piercing or slicing the skin with a needle or razor. Current methods utilize lancing devices that contain a multitude of spring, cam and mass actuators to drive the lancet. These include cantilever springs, diaphragms, coil springs, as well as gravity plumbs used to drive the lancet. The device may be held against the skin and mechanically triggered to ballistically launch the lancet. Unfortunately, the pain associated with each lancing event using known technology discourages patients from testing. In addition to vibratory stimulation of the skin as the driver impacts the end of a launcher stop, known spring based devices have the possibility of firing lancets that harmonically oscillate against the patient tissue, causing multiple strikes due to recoil. This recoil and multiple strikes of the lancet is one major impediment to patient compliance with a structured glucose monitoring regime.

Another impediment to patient compliance is the lack of spontaneous blood flow generated by known lancing technology. In addition to the pain as discussed above, a patient may need more than one lancing event to obtain a blood sample since spontaneous blood generation is unreliable using known lancing technology. Thus the pain is multiplied by the number of attempts required by a patient to successfully generate spontaneous blood flow. Different skin thickness may yield different results in terms of pain perception, blood yield and success rate of obtaining blood between different users of the lancing device. Known devices poorly account for these skin thickness variations.

A still further impediment to improved compliance with glucose monitoring are the many steps and inconvenience associated with each lancing event. Many diabetic patients that are insulin dependent may need to self-test for blood glucose levels five to six times daily. The large number of steps required in traditional methods of glucose testing, ranging from lancing, to milking of blood, applying blood to a test strip, and getting the measurements from the test strip, discourages many diabetic patients from testing their blood glucose levels as often as recommended. Older patients and those with deteriorating motor skills encounter difficulty loading lancets into launcher devices, transferring blood onto a test strip, or inserting thin test strips into slots on glucose measurement meters. Additionally, the wound channel left on the patient by known systems may also be of a size that discourages those who are active with their hands or who are worried about healing of those wound channels from testing their glucose levels.

SUMMARY OF THE INVENTION

The present invention provides solutions for at least some of the drawbacks discussed above. Specifically, some embodiments of the present invention provide a multiple lancet solution to measuring analyte levels in the body. The invention may use a high density design. At least some of these and other objectives described herein will be met by embodiments of the present invention.

These and other objects of the present invention are achieved in a device for use with a gripper. A cartridge is provided that defines a plurality of cavities. A plurality of penetrating members are at least partially contained in the cavities of the cartridge. The penetrating members are slidably movable to extend outward from the cartridge to penetrate tissue. Each cavity has a longitudinal opening that provides access to an elongate portion of the penetrating member. A sterility barrier is coupled to the cartridge. The sterility barrier covers a plurality of the longitudinal openings. The sterility barrier is configured to be moved so that the elongate portion is accessed by the gripper without touching the barrier.

In another embodiment of the present invention, a device for use in penetrating tissue to obtain a body fluid sample includes a cartridge and a plurality of penetrating members slidably coupled to the cartridge. Each penetrating member has a distal end sufficiently sharp to pierce tissue. Each penetrating member is moveable relative to the other ones so that the distal end of the respective penetrating member is movable to penetrate tissue. Each penetrating member is a bare lancet and does not penetrate an outer sterility barrier during actuation.

In another embodiment of the present invention, a device is provided with a cartridge that has a plurality of cavities. A plurality of penetrating members are at least partially contained in the cavities. The penetrating members are slidably movable to extend outward from lateral openings on the cartridge to penetrate tissue. A sterility barrier is coupled to the cartridge. The sterility barrier covers a plurality of the lateral openings and is configured to be moved so that a penetrating member exits the lateral opening without contacting the barrier.

In another embodiment of the present invention, a device is provided with means for housing a plurality of penetrating members in a radial configuration. The penetrating members are individually couplable to a driver.

In another embodiment of the present invention, a lancing system includes a cartridge that defines a plurality of cavities. A plurality of penetrating members are at least partially contained in the cavities. The penetrating members are slidably movable to extend outward from lateral openings on the cartridge to penetrate tissue. A sterility barrier is coupled to the cartridge. The sterility barrier covers at least one of the lateral openings and is configured to be moved so that a penetrating member exiting from the lateral opening during actuation will not contact the barrier. An electrically powered drive force generator is operatively coupled to an active one of the penetrating members to drive the active penetrating member into a tissue site.

In another embodiment of the present invention, a lancing system has a cartridge that defines a plurality of cavities. A plurality of penetrating members are at least partially contained in the cavities. The penetrating members are slidably movable to extend outward from lateral openings on the cartridge to penetrate tissue. A sterility barrier is coupled to the cartridge. The sterility barrier covers at least one of the lateral openings and is configured to be moved so that a penetrating member exiting the lateral opening during actuation will not contact the barrier. A feedback loop controls trajectory of each penetrating member extending outward from the cartridge during actuation.

In another embodiment of the present invention, a lancing system includes a single cartridge with a plurality of cavities. A plurality of penetrating members are at least partially contained in the cavities. The penetrating members are slidably movable to extend outward from the cartridge to penetrate tissue. Each cavity has a longitudinal opening that provides access to an elongate portion of the penetrating member. A sterility barrier is coupled to the cartridge and covers a plurality of the longitudinal openings. A punch is movable to penetrate the sterility barrier and release one of the penetrating members from a sterile environment created by the sterility barrier.

In another embodiment of the present invention, a lancing system has a single cartridge with a plurality of cavities. A plurality of penetrating members are at least partially contained in the cavities. The penetrating members are slidably movable to extend outward from lateral openings on the cartridge to penetrate tissue. A sterility barrier is coupled to the cartridge and covers a plurality of the lateral openings. A punch is movable to penetrate the sterility barrier, and pushes the sterility barrier into a position so that the penetrating member are actuated without contacting the sterility barrier.

In another embodiment of the present invention, a device includes a single cartridge. A plurality of penetrating members are coupled to the single cartridge and are couplable to a driver. A plurality of openings on the cartridge are configured to position the cartridge to align an unused penetrating member with the driver. An actuator is configured to engage the openings and actuate the cartridge to move the unused penetrating member into alignment with the driver.

In another embodiment of the present invention, a lancing system includes a driver. A cartridge has a plurality of bare lancets coupled to the cartridge. A lancet gripper is coupled to the driver. The gripper has a slot for receiving at least one of the bare lancets. The slot creates a frictional grip with the bare lancets.

In another embodiment of the present invention, a lancing system includes a lancet driver. A plurality of lancets are in a disc-shaped housing. A lancet gripper is included. A lancet release device is provided for releasing the lancet for a sterile environment prior to use. An actuator is configured to move the disc-shaped housing relative to the lancet gripper to bring one of the lancets into contact with the lancet gripper.

In another embodiment of the present invention, a lancing system includes a lancet driver. A cartridge housing is provided with the plurality of lancets. A lancet gripper is coupled to the lancet driver. A lancet release device releases one of the lancets from a sterile environment prior to use. The cartridge is movable relative to the lancet driver to engage and disengage one of the lancets from the lancet gripper.

In another embodiment of the present invention, a lancing system is provided for use with a driver and includes means for releasing a penetrating member from a sterile enclosure on a cartridge. The cartridge has a plurality of sterile enclosures and a plurality of penetrating members. Means are included for aligning and operatively coupling the penetrating member to the driver.

In another embodiment of the present invention, a method is provided for loading a cartridge that has a plurality of penetrating members into a housing of a lancing apparatus. Each penetrating member is released from a sterilized environment on the cartridge. The penetrating member is transported within the housing towards a launch position. The lancet is loaded to be operatively coupled to a penetrating member driver in the apparatus.

In another embodiment of the present invention, a method provides a cartridge that has a plurality of individually sealed cavities, each containing a penetrating member. A punch plate is lowered to release an unused penetrating member from one of the sealed cavities. The cartridge is rotated to align the unused penetrating member with a gripper. A frictional engagement is created with the penetrating member by inserting the penetrating member into a receiving slot on the gripper.

In another embodiment of the present invention, a method provides a cartridge that has a plurality of cavities, each containing a penetrating member. Each member is held by a coupling to the cartridge. A penetrating member is engaged with a gripper. A first force generator is used to move the gripper in a manner sufficient to release the penetrating member from the coupling to the cartridge. A second force generator is used to move the gripper in a manner sufficient to drive the penetrating member into tissue.

In another embodiment of the present invention, a method provides a cartridge that has a plurality of cavities, each containing a penetrating member. Each member is held by a coupling to the cartridge. A punch device and a penetrating member gripper are provided. Relative motion between the cartridge and the gripper is created and the cartridge is separated from the gripper. Relative motion between the cartridge and the gripper is created and the gripper is aligned over an unused penetrating member in the cartridge. Relative motion between the cartridge and the gripper is created and the gripper is engaged with the unused penetrating member.

In another embodiment of the present invention, a method provides a lancet driver. A visual display is installed on the lancet driver. The display is coupled to a processor, relays lancet information selected from, lancing performance or lancing setting.

In another embodiment of the present invention, a method provides a cartridge that has a plurality of cavities. A plurality of penetrating members are inserted and are at least partially contained in the cavities of the cartridge. The penetrating members are slidably movable to extend outward from lateral openings on the cartridge to penetrate tissue. A sterility barrier is added to the cartridge and covers a plurality of the lateral openings.

In another embodiment of the present invention, a manufacturing method provides a cartridge that has a plurality of cavities for holding penetrating members. The cartridge is sterilized while each of the cavities is in a sealed condition. The cartridge contains a plurality of penetrating members. A planar sheet of sterility barrier material is used to cover a plurality of the cavities to create a sterile environment inside each of the cavities.

In another embodiment of the present invention, a method provides a cartridge that has a plurality of bare lancets. At least a portion of a sterility barrier is moved such that an active one of the bare lancets exits the cartridge to penetrate tissue

without contacting the sterility barrier. The active one of the bare lancets is retracted back into the cartridge after penetrating tissue.

A further understanding of the nature and advantages of the invention will become apparent by reference to the remaining portions of the specification and drawings.

BRIEF DESCRIPTION OF THE DRAWINGS

FIG. **1** is a perspective view illustrating a system, according to an embodiment for use in piercing skin to obtain a blood sample;

FIG. **2** is a plan view of a portion of a replaceable penetrating member cartridge forming part of the system;

FIG. **3** is a cross-sectional end view on **3-3** in FIG. **2**;

FIG. **4** is a cross-sectional end view on **4-4** in FIG. **2**;

FIG. **5** is a perspective view of an apparatus forming part of the system and used for manipulating components of the cartridge, illustrating pivoting of a penetrating member accelerator in a downward direction;

FIG. **6**A is a view similar to FIG. **5**, illustrating how the cartridge is rotated or advanced;

FIG. **6**B is a cross-sectional side view illustrating how the penetrating member accelerator allows for the cartridge to be advanced;

FIGS. **7**A and **7**B are views similar to FIGS. **6**A and **6**B, respectively, illustrating pivoting of the penetrating member accelerator in an opposite direction to engage with a select one of the penetrating members in the cartridge;

FIGS. **8**A and **8**B are views similar to FIGS. **7**A and **7**B, respectively, illustrating how the penetrating member accelerator moves the selected penetrating member to pierce skin;

FIGS. **9**A and **9**B are views similar to FIGS. **8**A and **8**B, respectively, illustrating how the penetrating member accelerator returns the penetrating member to its original position;

FIG. **10** is a block diagram illustrating functional components of the apparatus; and

FIG. **11** is an end view illustrating a cartridge according to an optional embodiment that allows for better adhesion of sterilization barriers.

FIG. **12** is a cross-sectional view of an embodiment having features of the invention.

FIG. **13** is a cross-sectional view of an embodiment having features of the invention in operation.

FIG. **14** is a cross-sectional view illustrating a low-friction coating applied to one penetrating member contact surface.

FIG. **15** is a cross-sectional view illustrating a coating applied to one penetrating member contact surface which increases friction and improves the microscopic contact area between the penetrating member and the penetrating member contact surface.

FIG. **16** illustrates a portion of a penetrating member cartridge having an annular configuration with a plurality of radially oriented penetrating member slots and a distal edge of a drive member disposed in one of the penetrating member slots.

FIG. **17** is an elevational view in partial longitudinal section of a coated penetrating member in contact with a coated penetrating member contact surface.

FIG. **18** illustrates an embodiment of a lancing device having features of the invention.

FIG. **19** is a perspective view of a portion of a penetrating member cartridge base plate having a plurality of penetrating member slots and drive member guide slots disposed radially inward of and aligned with the penetrating member slots.

FIGS. **20-22** illustrate a penetrating member cartridge in section, a drive member, a penetrating member and the tip of a patient's finger during three sequential phases of a lancing cycle.

FIG. **23** illustrates an embodiment of a penetrating member cartridge having features of the invention.

FIG. **24** is an exploded view of a portion of the penetrating member cartridge of FIG. **12**.

FIGS. **25** and **26** illustrate a multiple layer sterility barrier disposed over a penetrating member slot being penetrated by the distal end of a penetrating member during a lancing cycle.

FIGS. **27** and **28** illustrate an embodiment of a drive member coupled to a driver wherein the drive member includes a cutting member having a sharpened edge which is configured to cut through a sterility barrier of a penetrating member slot during a lancing cycle in order for the drive member to make contact with the penetrating member.

FIGS. **29** and **30** illustrate an embodiment of a penetrating member slot in longitudinal section having a ramped portion disposed at a distal end of the penetrating member slot and a drive member with a cutting edge at a distal end thereof for cutting through a sterility barrier during a lancing cycle.

FIGS. **31-34** illustrate drive member slots in a penetrating member cartridge wherein at least a portion of the drive member slots have a tapered opening which is larger in transverse dimension at the top of the drive member slot than at the bottom of the drive member slot.

FIGS. **35-37** illustrate an embodiment of a penetrating member cartridge and penetrating member drive member wherein the penetrating member drive member has a contoured jaws configured to grip a penetrating member shaft.

FIGS. **38** and **39** show a portion of a lancing device having a lid that can be opened to expose a penetrating member cartridge cavity for removal of a used penetrating member cartridge and insertion of a new penetrating member cartridge.

FIGS. **40** and **41** illustrate a penetrating member cartridge that has penetrating member slots on both sides.

FIGS. **42-44** illustrate end and perspective views of a penetrating member cartridge having a plurality of penetrating member slots formed from a corrugated surface of the penetrating member cartridge.

FIGS. **45-48** illustrate embodiments of a penetrating member and drive member wherein the penetrating member has a slotted shaft and the drive member has a protuberance configured to mate with the slot in the penetrating member shaft.

FIG. **49** is a perspective view of a cartridge according to the present invention.

FIGS. **50** and **51** show close-ups of outer peripheries various cartridges.

FIG. **52** is a perspective view of an underside of a cartridge.

FIG. **53**A shows a top down view of a cartridge and the punch and pusher devices.

FIG. **53**B is a perspective view of one embodiment of a punch plate.

FIGS. **54**A-**54**G show a sequence of motion for the punch plate, the cartridge, and the cartridge pusher.

FIGS. **55**A-**55**B show cross-sections of the system according to the present invention.

FIG. **56**A shows a perspective view of the system according to the present invention.

FIGS. **56**B-**56**D are cut-away views showing mechanisms within the present invention.

FIGS. **57-65**B show optional embodiments according to the present invention.

FIG. **66-68** shows a still further embodiment of a cartridge according to the present invention.

FIGS. **69**A-**69**L show the sequence of motions associated with an optional embodiment of a cartridge according to the present invention.

FIG. **70**-**72** show views of a sample modules used with still further embodiments of a cartridge according to the present invention.

FIG. **73** shows a cartridge with a sterility barrier and a sensor layer.

FIG. **74**-**78** show still further embodiments of analyte sensors coupled to a cartridge.

FIGS. **79**-**84** show optional configurations for a cartridge for use with the present invention.

FIG. **85** shows a see-through view of one embodiment of a system according to the present invention.

FIG. **86** is a schematic of an optional embodiment of a system according to the present invention.

FIGS. **87**A-**87**B show still further embodiments of cartridges according to the present invention.

FIG. **88** shows a cartridge having an array of analyte sensors.

FIGS. **89**-**90** show embodiments of illumination systems for use with the present invention.

FIGS. **91**-**92** show a cross-section of further embodiments of the illumination system.

FIG. **93** shows a cross-section of a system similar to that of FIG. **89**.

FIG. **94** shows a cross-section of a system similar to that of FIG. **90**.

FIGS. **95**-**96** show further views of a system similar to that of FIG. **89**.

DESCRIPTION OF THE SPECIFIC EMBODIMENTS

The present invention provides a multiple sensor solution for body fluid sampling. Specifically, some embodiments of the present invention provides a multiple sensor and multiple lancet solution to measuring analyte levels in the body. The invention may use a high density design. It may use lancets of smaller size than known lancets. The device may be used for multiple lancing events without having to remove a disposable from the device. The invention may provide improved sensing capabilities. At least some of these and other objectives described herein will be met by embodiments of the present invention.

It is to be understood that both the foregoing general description and the following detailed description are exemplary and explanatory only and are not restrictive of the invention, as claimed. It must be noted that, as used in the specification and the appended claims, the singular forms "a", "an" and "the" include plural referents unless the context clearly dictates otherwise. Thus, for example, reference to "a material" may include mixtures of materials, reference to "a chamber" may include multiple chambers, and the like. References cited herein are hereby incorporated by reference in their entirety, except to the extent that they conflict with teachings explicitly set forth in this specification.

In this specification and in the claims which follow, reference will be made to a number of terms which shall be defined to have the following meanings:

"Optional" or "optionally" means that the subsequently described circumstance may or may not occur, so that the description includes instances where the circumstance occurs and instances where it does not. For example, if a device optionally contains a feature for analyzing a blood sample, this means that the analysis feature may or may not be present, and, thus, the description includes structures wherein a device possesses the analysis feature and structures wherein the analysis feature is not present.

"Analyte sensor" refers to any use, singly or in combination, of chemical test reagents and methods, electrical test circuits and methods, physical test components and methods, optical test components and methods, and biological test reagents and methods to yield information about a blood sample. Such methods are well known in the art and may be based on teachings of, e.g. Tietz Textbook of Clinical Chemistry, 3d Ed., Sec. V, pp. 776-78 (Burtis & Ashwood, Eds., W.B. Saunders Company, Philadelphia, 1999); U.S. Pat. No. 5,997,817 to Chrismore et al. (Dec. 7, 1999); U.S. Pat. No. 5,059,394 to Phillips et al. (Oct. 22, 1991); U.S. Pat. No. 5,001,054 to Wagner et al. (Mar. 19, 1991); and U.S. Pat. No. 4,392,933 to Nakamura et al. (Jul. 12, 1983), the teachings of which are hereby incorporated by reference, as well as others. Analyte sensor may include sensors in the sample test chamber that test electrochemical properties of the blood, or they may include optical means for sensing optical properties of the blood (e.g. oxygen saturation level), or they may include biochemical reagents (e.g. antibodies) to sense properties (e.g. presence of antigens) of the blood. Said analyte sensor may be present at, e.g., a "test site" or an "analytical site." The analyte sensor may comprise biosensing or reagent material that will react with an analyte in the blood (e.g. glucose) so that an appropriate signal correlating with the presence of the analyte is generated and can be read by the reader apparatus. Analyte sensor are "associated with" a chamber or other structure when the analyte sensor participates in the function of providing an appropriate signal about the blood sample to the reader device. Analyte sensor may also include nanowire sensors as described herein. Analyte sensor may use potentiometric, coulometric, or other method useful for detection of analyte levels.

FIGS. **1**-**11** of the accompanying drawings illustrates one embodiment of a system **10** for piercing skin to obtain a blood sample. The system **10** may include a replaceable cartridge **12** and an apparatus **14** for removably receiving the cartridge **12** and for manipulating components of the cartridge **12**.

Referring jointly to FIGS. **1** and **2**, the cartridge **12** may include a plurality of penetrating members **18**. The cartridge **12** may be in the form of a circular disc and has an outer circular surface **20** and an opening forming an inner circular surface **22**. A plurality of grooves **24** are formed in a planar surface **26** of the cartridge **12**. Each groove **24** is elongated and extends radially out from a center point of the cartridge **12**. Each groove **24** is formed through the outer circular surface **20**. Although not shown, it should be understood that the grooves **24** are formed over the entire circumference of the planar surface **26**. As shown in FIGS. **3** and **4**, each groove **24** is relatively narrow closer to the center point of the cartridge **12** and slightly wider further from the center point. These grooves **24** may be molded into the cartridge **12**, machined into the cartridge, or formed using other methods useful in the manufacture of medical devices.

In the present embodiment, each penetrating member **18** has an elongated body **26** and a sharpened distal end **27** having a sharp tip **30**. The penetrating member **18** may have a circular in cross-section with a diameter in this embodiment of about 0.315 mm. All outer surfaces of the penetrating member **18** may have the same coefficient of friction. The penetrating member may be, but is not necessarily, a bare lancet. The lancet is "bare", in the sense that no raised formations or molded parts are formed thereon that are complementarily engageable with another structure. Traditional lancets include large plastic molded parts that are used to facilitate engagement. Unfortunately, such attachments add

size and cost. In the most basic sense, a bare lancet or bare penetrating member is an elongate wire having sharpened end. If it is of sufficiently small diameter, the tip may be penetrating without having to be sharpened. A bare lancet may be bent and still be considered a bare lancet. The bare lancet in one embodiment may be made of one material.

In the present embodiment, each penetrating member **18** is located in a respective one of the grooves **24**. The penetrating members **18** have their sharpened distal ends **27** pointed radially out from the center point of the cartridge **12**. A proximal end of each penetrating member **15** may engage in an interference fit with opposing sides of a respective groove **24** as shown in FIG. **3**. Other embodiments of the cartridge **12** may not use such an interference fit. For example, they may use a fracturable adhesive to releasably secure the penetrating member **18** to the cartridge **12**. As shown in FIG. **4**, more distal portions of the penetrating member **18** are not engaged with the opposing sides of the groove **24** due to the larger spacing between the sides.

The cartridge **12** may further include a sterilization barrier **28** attached to the upper surface **26**. The sterilization barrier **28** is located over the penetrating members **18** and serves to insulate the penetrating members **18** from external contaminants. The sterilization barrier **28** is made of a material that can easily be broken when an edge of a device applies a force thereto. The sterilization barrier **28** alone or in combination with other barriers may be used to create a sterile environment about at least the tip of the penetrating member prior to lancing or actuation. The sterilization barrier **28** may be made of a variety of materials such as but not limited to metallic foil, aluminum foil, paper, polymeric material, or laminates combining any of the above. Other details of the sterilization barrier are detailed herein.

In the present embodiment, the apparatus **14** may include a housing **30**, an initiator button **32**, a penetrating member movement subassembly **34**, a cartridge advance subassembly **36**, batteries **38**, a capacitor **40**, a microprocessor controller **42**, and switches **44**. The housing **30** may have a lower portion **46** and a lid **48**. The lid **48** is secured to the lower portion **46** with a hinge **50**. The lower portion **46** may have a recess **52**. A circular opening **54** in the lower portion **46** defines an outer boundary of the recess **52** and a level platform **56** of the lower portion **46** defines a base of the recess **52**.

In use, the lid **48** of the present embodiment is pivoted into a position as shown in FIG. **1**. The cartridge **12** is flipped over and positioned in the recess **52**. The planar surface **26** rests against the level platform **56** and the circular opening **54** contacts the outer circular surface **20** to prevent movement of the cartridge **12** in a plane thereof. The lid **48** is then pivoted in a direction **60** and closes the cartridge **12**.

Referring to the embodiment shown in FIG. **5**, the penetrating member movement subassembly **34** includes a lever **62**, a penetrating member accelerator **64**, a linear actuator **66**, and a spring **68**. Other suitable actuators including but not limited to rotary actuators are described in commonly assigned, copending U.S. patent application Ser. No. 10/127,395 filed Apr. 19, 2002. The lever **62** may be pivotably secured to the lower portion **46**. The button **32** is located in an accessible position external of the lower portion **46** and is connected by a shaft **70** through the lower portion **46** to one end of the lever **62**. The penetrating member accelerator **64** is mounted to an opposing end of the lever **62**. A user depresses the button **32** in an upward direction **66** so that the shaft **70** pivots the end of the lever **62** to which it is connected in an upward direction. The opposing end of the lever pivots in a downward direction **66**. The spring **46** is positioned between the button **32** and the base **40** and compresses when the button **32** is depressed to create a force that tends to move the button **32** down and pivot the penetrating member accelerator upward in a direction opposite to the direction **64**.

Referring to FIGS. **6**A and **6**B in this particular embodiment, the movement of the button into the position shown in FIG. **5** also causes contact between a terminal **74** on the shaft **20** with a terminal **70** secured to the lower portion **46**. Contact between the terminals **74** and **76** indicates that the button **32** has been fully depressed. With the button **32** depressed, the cartridge **12** can be rotated without interference by the penetrating member actuator **64**. To this effect, the cartridge advancer subsystem **36** includes a pinion gear **80** and a stepper motor **82**. The stepper motor **82** is secured to the lower portion **46**. The pinion gear **80** is secured to the stepper motor **82** and is rotated by the stepper motor **82**. Teeth on the pinion gear **80** engage with teeth on the inner circular surface **22** of the cartridge **12**. Rotation of the pinion gear **80** causes rotation of the cartridge **12** about the center point thereof. Each time that the terminals **74** and **76** make contact, the stepper motor **82** is operated to rotate the cartridge **12** through a discrete angle equal to an angular spacing from a centerline of one of the penetrating members **18** to a centerline of an adjacent penetrating member. A select penetrating member **18** is so moved over the penetrating member accelerator **64**, as shown in FIG. **6**B. Subsequent depressions of the button **32** will cause rotation of subsequent adjacent penetrating members **18** into a position over the penetrating member accelerator **64**.

The user then releases pressure from the button, as shown in FIG. **7**A. The force created by the spring **68** or other resilient member moves the button **32** in a downward direction **76**. The shaft **70** is pivotably secured to the lever **62** so that the shaft **70** moves the end of the lever **62** to which it is connected down. The opposite end of the lever **62** pivots the penetrating member accelerator **64** upward in a direction **80**. As shown in FIG. **7**B, an edge **82** of the penetrating member accelerator **64** breaks through a portion of the sterilization barrier **28** and comes in to physical contact with a lower side surface of the penetrating member **18**.

Referring to FIG. **8**A, the linear actuator **66** includes separate advancing coils **86**A and retracting coils **86**B, and a magnetizable slug **90** within the coils **86**A and **86**B. The coils **86**A and **86**B are secured to the lower portion of **46**, and the slug **90** can move within the coils **86**A and **88**B. Once the penetrating member accelerator **64** is located in the position shown in FIGS. **7**A and **7**B, electric current is provided to the advancing coils **86** only. The current in the advancing coils **86** creates a force in a direction **88** on the slug **90** according to conventional principles relating to electromagnetics.

A bearing **91** is secured to the lever and the penetrating member accelerator **64** has a slot **92** over the bearing **91**. The slot **92** allows for the movement of the penetrating member accelerator **64** in the direction **88** relative to the lever **62**, so that the force created on the slug moves the penetrating member accelerator **64** in the direction **88**.

The spring **68** is not entirely relaxed, so that the spring **68**, through the lever **62**, biases the penetrating member accelerator **64** against the lower side surface of the penetrating member **18** with a force F**1**. The penetrating member **18** rests against a base **88** of the cartridge **12**. An equal and opposing force F**2** is created by the base **88** on an upper side surface of the penetrating member **18**.

The edge **82** of the penetrating member accelerator **64** has a much higher coefficient of friction than the base **88** of the cartridge **12**. The higher coefficient of friction of the edge contributes to a relatively high friction force F**3** on the lower side surface of the penetrating member **18**. The relatively low

coefficient of friction of the base **88** creates a relatively small friction force F**4** on the upper side surface of the penetrating member **18**. A difference between the force F**3** and F**4** is a resultant force that accelerates the penetrating member in the direction **88** relative to the cartridge **12**. The penetrating member is moved out of the interference fit illustrated in FIG. **3**. The bare penetrating member **18** is moved without the need for any engagement formations on the penetrating member. Current devices, in contrast, often make use a plastic body molded onto each penetrating member to aid in manipulating the penetrating members. Movement of the penetrating member **18** moves the sharpened end thereof through an opening **90** in a side of the lower portion **46**. The sharp end **30** of the penetrating member **18** is thereby moved from a retracted and safe position within the lower portion **46** into a position wherein it extends out of the opening **90**. Accelerated, high-speed movement of the penetrating member is used so that the sharp tip **30** penetrates skin of a person. A blood sample can then be taken from the person, typically for diabetic analysis.

Reference is now made to FIGS. **9**A and **9**B. After the penetrating member is accelerated (for example, but not limitation, less than 0.25 seconds thereafter), the current to the accelerating coils **86**A is turned off and the current is provided to the retracting coils **86**B. The slug **90** moves in an opposite direction **92** together with the penetrating member accelerator **64**. The penetrating member accelerator **64** then returns the used penetrating member into its original position, i.e., the same as shown in FIG. **7**B.

Subsequent depression of the button as shown in FIG. **5** will then cause one repetition of the process described, but with an adjacent sterile penetrating member. Subsequent sterile penetrating members can so be used until all the penetrating members have been used, i.e., after one complete revolution of the cartridge **12**. In this embodiment, a second revolution of the cartridge **12** is disallowed to prevent the use of penetrating members that have been used in a previous revolution and have become contaminated. The only way in which the user can continue to use the apparatus **14** is by opening the lid **48** as shown in FIG. **1**, removing the used cartridge **12**, and replacing the used cartridge with another cartridge. A sensor (not shown) detects whenever a cartridge is removed and replaced with another cartridge. Such a sensor may be but is not limited to an optical sensor, an electrical contact sensor, a bar code reader, or the like.

FIG. **10** illustrates the manner in which the electrical components may be functionally interconnected for the present embodiment. The battery **38** provides power to the capacitor **40** and the controller **42**. The terminal **76** is connected to the controller **42** so that the controller recognizes when the button **32** is depressed. The capacitor to provide power (electric potential and current) individually through the switches (such as field-effect transistors) to the advancing coils **86**A, retracting coils **86**B and the stepper motor **82**. The switches **44**A, B, and C are all under the control of the controller **42**. A memory **100** is connected to the controller. A set of instructions is stored in the memory **100** and is readable by the controller **42**. Further functioning of the controller **42** in combination with the terminal **76** and the switches **44**A, B, and C should be evident from the foregoing description.

FIG. **11** illustrates a configuration for another embodiment of a cartridge having penetrating members. The cartridge **112** has a corrugated configuration and a plurality of penetrating members **118** in grooves **124** formed in opposing sides of the cartridge **112**. Sterilization barriers **126** and **128** are attached over the penetrating members **118** at the top and the penetrating members **118** at the bottom, respectively. Such an arrangement provides large surfaces for attachment of the sterilization barriers **126** and **128**. All the penetrating members **118** on the one side are used first, whereafter the cartridge **112** is turned over and the penetrating members **118** on the other side are used. Additional aspects of such a cartridge are also discussed in FIGS. **42-44**.

Referring now to FIGS. **12-13**, a friction based method of coupling with and driving bare lancets or bare penetrating members will be described in further detail. Any embodiment of the present invention disclosed herein may be adapted to use these methods. As seen in FIG. **12**, surface **201** is physically in contact with penetrating member **202**. Surface **203** is also physically in contact with penetrating member **202**. In the present embodiment of the invention, surface **201** is stainless steel, penetrating member **202** is stainless steel, and surface **203** is polytetrafluoroethylene-coated stainless steel.

FIG. **13** illustrates one embodiment of the friction based coupling in use. Normal force **206** may be applied vertically to surface **201**, pressing it against penetrating member **202**. Penetrating member **202** is thereby pressed against surface **203**. Normal force **206** is transmitted through surface **201** and penetrating member **202** to also act between penetrating member **202** and surface **203**. Surface **203** is held rigid or stationary with respect to a target of the lancet. Using the classical static friction model, the maximum frictional force between surface **201** and penetrating member **202** is equal to the friction coefficient between surface **201** and penetrating member **202** multiplied by the normal force between surface **201** and penetrating member **202**. In this embodiment, the maximum frictional force between surface **203** and penetrating member **202** is equal to the coefficient of friction between the surface **203** and the penetrating member **202** multiplied by the normal force between the surface **203** and the penetrating member **202**. Because friction coefficient between surface **203** and penetrating member **202** is less than friction coefficient between surface **201** and penetrating member **202**, the interface between surface **201** and penetrating member **202** can develop a higher maximum static friction force than can the interface between surface **203** and penetrating member **202**.

Driving force as indicated by arrow **207** is applied to surface **201** perpendicular to normal force **206**. The sum of the forces acting horizontally on surface **201** is the sum of driving force **207** and the friction force developed at the interface of surface **201** and penetrating member **202**, which acts in opposition to driving force **207**. Since the coefficient of friction between surface **203** and penetrating member **202** is less than the coefficient of friction between surface **201** and penetrating member **202**, penetrating member **202** and surface **201** will remain stationary with respect to each other and can be considered to behave as one piece when driving force **207** just exceeds the maximum frictional force that can be supported by the interface between surface **203** and penetrating member **202**. Surface **201** and penetrating member **202** can be considered one piece because the coefficient of friction between surface **201** and penetrating member **202** is high enough to prevent relative motion between the two.

In one embodiment, the coefficient of friction between surface **201** and penetrating member **202** is approximately 0.8 corresponding to the coefficient of friction between two surfaces of stainless steel, while the coefficient of friction between surface **203** and penetrating member **202** is approximately 0.04, corresponding to the coefficient of friction between a surface of stainless steel and one of polytetrafluoroethylene. Normal force **206** has a value of 202 Newtons. Using these values, the maximum frictional force that the interface between surface **201** and penetrating member **202** can support is 1.6 Newtons, while the maximum frictional

force that the interface between surface **203** and penetrating member **202** can support is 0.08 Newtons. If driving force **207** exceeds 0.08 Newtons, surface **201** and penetrating member **202** will begin to accelerate together with respect to surface **203**. Likewise, if driving force **207** exceeds 1.6 Newtons and penetrating member **202** encounters a rigid barrier, surface **201** would move relative to penetrating member **202**.

Another condition, for example, for surface **201** to move relative to penetrating member **202** would be in the case of extreme acceleration. In an embodiment, penetrating member **202** has a mass of 8.24×10−6 kg. An acceleration of 194,174 m/s2 of penetrating member **202** would therefore be required to exceed the frictional force between penetrating member **202** and surface **201**, corresponding to approximately 19,800 g's. Without being bound to any particular embodiment or theory of operation, other methods of applying friction base coupling may also be used. For example, the penetrating member **202** may be engaged by a coupler using a interference fit to create the frictional engagement with the member.

FIG. **14** illustrates a polytetrafluoroethylene coating on stainless steel surface **203** in detail. It should be understood that the surface **203** may be coated with other materials such as but not limited to Telfon®, silicon, polymer or glass. The coating may cover all of the penetrating member, only the proximal portions, only the distal portions, only the tip, only some other portion, or some combination of some or all of the above. FIG. **15** illustrates a doping of lead applied to surface **201**, which conforms to penetrating member **202** microscopically when pressed against it. Both of these embodiments and other coated embodiments of a penetrating member may be used with the actuation methods described herein.

The shapes and configurations of surface **201** and surface **102** could be some form other than shown in FIGS. **12-15**. For example, surface **201** could be the surface of a wheel, which when rotated causes penetrating member **202** to advance or retract relative to surface **203**. Surface **201** could be coated with another conformable material besides lead, such as a plastic. It could also be coated with particles, such as diamond dust, or given a surface texture to enhance the friction coefficient of surface **201** with penetrating member **202**. Surface **202** could be made of or coated with diamond, fluorinated ethylene propylene, perfluoroalkoxy, a copolymer of ethylene and tetrafluoroethylene, a copolymer of ethylene and chlorotrifluoroethylene, or any other material with a coefficient of friction with penetrating member **202** lower than that of the material used for surface **201**.

Referring to FIG. **16**, a portion of a base plate **210** of an embodiment of a penetrating member cartridge is shown with a plurality of penetrating member slots **212** disposed in a radial direction cut into a top surface **214** of the base plate. A drive member **216** is shown with a distal edge **218** disposed within one of the penetrating member slots **212** of the base plate **210**. The distal edge **218** of the drive member **216** is configured to slide within the penetrating member slots **212** with a minimum of friction but with a close fit to minimize lateral movement during a lancing cycle.

FIG. **17** shows a distal portion **220** of a coated penetrating member **222** in partial longitudinal section. The coated penetrating member **222** has a core portion **224**, a coating **226** and a tapered distal end portion **228**. A portion of a coated drive member **230** is shown having a coating **234** with penetrating member contact surface **236**. The penetrating member contact surface **236** forms an interface **238** with an outer surface **240** of the coated penetrating member **222**. The interface **238** has a characteristic friction coefficient that will depend in part on the choice of materials for the penetrating member coating **226** and the drive member coating **234**. If silver is used as the penetrating member and drive member coating **226** and **236**, this yields a friction coefficient of about 1.3 to about 1.5. Other materials can be used for coatings **226** and **236** to achieve the desired friction coefficient. For example, gold, platinum, stainless steel and other materials may be used for coatings **226** and **236**. It may be desirable to use combinations of different materials for coatings **226** and **236**. For example, an embodiment may include silver for a penetrating member coating **226** and gold for a drive member coating. Some embodiments of the interface **238** can have friction coefficients of about 1.15 to about 5.0, specifically, about 1.3 to about 2.0.

Embodiments of the penetrating member **222** can have an outer transverse dimension or diameter of about 200 to about 400 microns, specifically, about 275 to about 325 microns. Embodiments of penetrating member **222** can have a length of about 10 to about 30 millimeters, specifically, about 15 to about 25 millimeters. Penetrating member **222** can be made from any suitable high strength alloy such as stainless steel or the like.

FIG. **18** is a perspective view of a lancing device **242** having features of the invention. A penetrating member cartridge **244** is disposed about a driver **246** that is coupled to a drive member **248** by a coupler rod **250**. The penetrating member cartridge **244** has a plurality of penetrating member slots **252** disposed in a radial configuration in a top surface **254** a base plate **256** of the penetrating member cartridge **244**. The distal ends **253** of the penetrating member slots **252** are disposed at an outer surface **260** of the base plate **256**. A fracturable sterility barrier **258**, shown partially cut away, is disposed on the top surface **254** of base plate **256** over the plurality of penetrating member slots **252**. The sterility barrier **258** is also disposed over the outer surface **260** of the base plate **256** in order to seal the penetrating member slots from contamination prior to a lancing cycle. A distal portion of a penetrating member **262** is shown extending radially from the penetrating member cartridge **244** in the direction of a patient's finger **264**.

FIG. **19** illustrates a portion of the base plate **256** used with the lancing device **242** in more detail and without sterility barrier **258** in place (for ease of illustration). The base plate **256** includes a plurality of penetrating member slots **252** which are in radial alignment with corresponding drive member slots **266**. The drive member slots **266** have an optional tapered input configuration that may facilitate alignment of the drive member **248** during downward movement into the drive member slot **266** and penetrating member slot **252**. Penetrating member slots **252** are sized and configured to accept a penetrating member **262** disposed therein and allow axial movement of the penetrating member **262** within the penetrating member slots **252** without substantial lateral movement.

Referring again to FIG. **18**, in use, the present embodiment of penetrating member cartridge **242** is placed in an operational configuration with the driver **246**. A lancing cycle is initiated and the drive member **248** is brought down through the sterility barrier **258** and into a penetrating member slot **252**. A penetrating member contact surface of the drive member then makes contact with an outside surface of the penetrating member **262** and is driven distally toward the patient's finger **264** as described above with regard to the embodiment discussed in FIG. **20**. The friction coefficient between the penetrating member contact surface of the drive member **248** and the penetrating member **262** is greater than the friction coefficient between the penetrating member **262** and an interior surface of the penetrating member slots **252**. As such, the drive member **248** is able to drive the penetrating

member **262** distally through the sterility barrier **258** and into the patient's finger **264** without any relative movement or substantial relative movement between the drive member **248** and the penetrating member **262**.

Referring to FIGS. **20-22**, a lancing cycle sequence is shown for a lancing device **242** with another embodiment of a penetrating member cartridge **244** as shown in FIGS. **23** and **24**. The base plate **256** of the penetrating member cartridge **242** shown in FIGS. **23** and **24** has a plurality of penetrating member slots **252** with top openings **268** that do not extend radially to the outer surface **260** of the base plate **256**. In this way, the penetrating member slots **252** can be sealed with a first sterility barrier **270** disposed on the top surface **254** of the base plate **256** and a second sterility barrier **272** disposed on the outer surface **260** of the base plate **256**. Penetrating member outlet ports **274** are disposed at the distal ends of the penetrating member slots **252**.

Referring again to FIG. **20**, the penetrating member **262** is shown in the proximally retracted starting position within the penetrating member slot **252**. The outer surface of the penetrating member **276** is in contact with the penetrating member contact surface **278** of the drive member **248**. The friction coefficient between the penetrating member contact surface **278** of the drive member **248** and the outer surface **276** of the penetrating member **262** is greater than the friction coefficient between the penetrating member **262** and an interior surface **280** of the penetrating member slots **252**. A distal drive force as indicated by arrow **282** in FIG. **10** is then applied via the drive coupler **250** to the drive member **248** and the penetrating member is driven out of the penetrating member outlet port **274** and into the patient's finger **264**. A proximal retraction force, as indicated by arrow **284** in FIG. **22**, is then applied to the drive member **248** and the penetrating member **262** is withdrawn from the patient's finger **264** and back into the penetrating member slot **252**.

FIGS. **25** and **26** illustrate an embodiment of a multiple layer sterility barrier **258** in the process of being penetrated by a penetrating member **62**. It should be understood that this barrier **258** may be adapted for use with any embodiment of the present invention. The sterility barrier **258** shown in FIGS. **25** and **26** is a two layer sterility barrier **258** that facilitates maintaining sterility of the penetrating member **262** as it passes through and exits the sterility barrier **258**. In FIG. **25**, the distal end **286** of the penetrating member **262** is applying an axial force in a distal direction against an inside surface **288** of a first layer **290** of the sterility barrier **258**, so as to deform the first layer **290** of the sterility barrier **258**. The deformation **291** of the first layer **290** in turn applies a distorting force to the second layer **292** of the sterility barrier **258**. The second layer of the sterility barrier is configured to have a lower tensile strength that the first layer **290**. As such, the second layer **292** fails prior to the first layer **290** due to the strain imposed on the first layer **290** by the distal end **286** of the penetrating member **262**, as shown in FIG. **26**. After the second layer **292** fails, it then retracts from the deformed portion **291** of the first layer **290** as shown by arrows **294** in FIG. **26**. As long as the inside surface **288** and outside surface **296** of the first layer **290** are sterile prior to failure of the second layer **292**, the penetrating member **262** will remain sterile as it passes through the first layer **290** once the first layer eventually fails. Such a multiple layer sterility barrier **258** can be used for any of the embodiments discussed herein. The multiple layer sterility barrier **258** can also include three or more layers.

Referring to FIGS. **27** and **28**, an embodiment of a drive member **300** coupled to a driver **302** wherein the drive member **300** includes a cutting member **304** having a sharpened edge **306** which is configured to cut through a sterility barrier **258** of a penetrating member slot **252** during a lancing cycle in order for the drive member **300** to make contact with a penetrating member. An optional lock pin **308** on the cutting member **304** can be configured to engage the top surface **310** of the base plate **312** in order to prevent distal movement of the cutting member **304** with the drive member **300** during a lancing cycle.

FIGS. **29** and **30** illustrate an embodiment of a penetrating member slot **316** in longitudinal section having a ramped portion **318** disposed at a distal end **320** of the penetrating member slot. A drive member **322** is shown partially disposed within the penetrating member slot **316**. The drive member **322** has a cutting edge **324** at a distal end **326** thereof for cutting through a sterility barrier **328** during a lancing cycle. FIG. **30** illustrates the cutting edge **324** cutting through the sterility barrier **328** during a lancing cycle with the cut sterility barrier **328** peeling away from the cutting edge **324**.

FIGS. **31-34** illustrate drive member slots in a base plate **330** of a penetrating member cartridge wherein at least a portion of the drive member slots have a tapered opening which is larger in transverse dimension at a top surface of the base plate than at the bottom of the drive member slot. FIG. **31** illustrates a base plate **330** with a penetrating member slot **332** that is tapered at the input **334** at the top surface **336** of the base plate **330** along the entire length of the penetrating member slot **332**. In such a configuration, the penetrating member slot and drive member slot (not shown) would be in communication and continuous along the entire length of the slot **332**. As an optional alternative, a base plate **338** as shown in FIGS. **32** and **33** can have a drive member slot **340** that is axially separated from the corresponding penetrating member slot **342**. With this configuration, the drive member slot **340** can have a tapered configuration and the penetrating member slot **342** can have a straight walled configuration. In addition, this configuration can be used for corrugated embodiments of base plates **346** as shown in FIG. **34**. In FIG. **34**, a drive member **348** is disposed within a drive member slot **350**. A penetrating member contact surface **352** is disposed on the drive member **348**. The contact surface **352** has a tapered configuration that will facilitate lateral alignment of the drive member **348** with the drive member slot **350**.

FIGS. **35-37** illustrate an embodiment of a penetrating member cartridge **360** and drive member **362** wherein the drive member **362** has contoured jaws **364** configured to grip a penetrating member shaft **366**. In FIG. **35**, the drive member **362** and penetrating member shaft **366** are shown in transverse cross section with the contoured jaws **364** disposed about the penetrating member shaft **366**. A pivot point **368** is disposed between the contoured jaws **364** and a tapered compression slot **370** in the drive member **362**. A compression wedge **372** is shown disposed within the tapered compression slot **370**. Insertion of the compression wedge **372** into the compression slot **370** as indicated by arrow **374**, forces the contoured jaws **364** to close about and grip the penetrating member shaft **366** as indicated by arrows **376**.

FIG. **36** shows the drive member **362** in position about a penetrating member shaft **366** in a penetrating member slot **378** in the penetrating member cartridge **360**. The drive member can be actuated by the methods discussed above with regard to other drive member and driver embodiments. FIG. **37** is an elevational view in longitudinal section of the penetrating member shaft **166** disposed within the penetrating member slot **378**. The arrows **380** and **382** indicate in a general way, the path followed by the drive member **362** during a lancing cycle. During a lancing cycle, the drive member comes down into the penetrating member slot **378** as

indicated by arrow **380** through an optional sterility barrier (not shown). The contoured jaws of the drive member then clamp about the penetrating member shaft **366** and move forward in a distal direction so as to drive the penetrating member into the skin of a patient as indicated by arrow **382**.

FIGS. **38** and **39** show a portion of a lancing device **390** having a lid **392** that can be opened to expose a penetrating member cartridge cavity **394** for removal of a used penetrating member cartridge **396** and insertion of a new penetrating member cartridge **398**. Depression of button **400** in the direction indicated by arrow **402** raises the drive member **404** from the surface of the penetrating member cartridge **396** by virtue of lever action about pivot point **406**. Raising the lid **392** actuates the lever arm **408** in the direction indicated by arrow **410** which in turn applies a tensile force to cable **412** in the direction indicated by arrow **414**. This action pulls the drive member back away from the penetrating member cartridge **396** so that the penetrating member cartridge **396** can be removed from the lancing device **390**. A new penetrating member cartridge **398** can then be inserted into the lancing device **390** and the steps above reversed in order to position the drive member **404** above the penetrating member cartridge **398** in an operational position.

FIGS. **40** and **41** illustrate a penetrating member cartridge **420** that has penetrating member slots **422** on a top side **424** and a bottom side **426** of the penetrating member cartridge **420**. This allows for a penetrating member cartridge **420** of a diameter D to store for use twice the number of penetrating members as a one sided penetrating member cartridge of the same diameter D.

FIGS. **42-44** illustrate end and perspective views of a penetrating member cartridge **430** having a plurality of penetrating member slots **432** formed from a corrugated surface **434** of the penetrating member cartridge **430**. Penetrating members **436** are disposed on both sides of the penetrating member cartridge **430**. A sterility barrier **438** is shown disposed over the penetrating member slots **432** in FIG. **44**.

FIGS. **45-48** illustrate embodiments of a penetrating member **440** and drive member **442** wherein the penetrating member **440** has a transverse slot **444** in the penetrating member shaft **446** and the drive member **442** has a protuberance **448** configured to mate with the transverse slot **444** in the penetrating member shaft **446**. FIG. **45** shows a protuberance **448** having a tapered configuration that matches a tapered configuration of the transverse slot **444** in the penetrating member shaft **446**. FIG. **46** illustrates an optional alternative embodiment wherein the protuberance **448** has straight walled sides that are configured to match the straight walled sides of the transverse slot **444** shown in FIG. **46**. FIG. **47** shows a tapered protuberance **448** that is configured to leave an end gap **450** between an end of the protuberance **448** and a bottom of the transverse slot in the penetrating member shaft **446**.

FIG. **48** illustrates a mechanism **452** to lock the drive member **442** to the penetrating member shaft **446** that has a lever arm **454** with an optional bearing **456** on the first end **458** thereof disposed within a guide slot **459** of the drive member **442**. The lever arm **454** has a pivot point **460** disposed between the first end **458** of the lever arm **454** and the second end **462** of the lever arm **454**. A biasing force is disposed on the second end **462** of the lever arm **454** by a spring member **464** that is disposed between the second end **462** of the lever arm **454** and a base plate **466**. The biasing force in the direction indicated by arrow **468** forces the penetrating member contact surface **470** of the drive member **442** against the outside surface of the penetrating member **446** and, in addition, forces the protuberance **448** of the drive member **442** into the transverse slot **444** of the penetrating member shaft **446**.

Referring now to FIG. **49**, another embodiment of a replaceable cartridge **500** suitable for housing a plurality of individually moveable penetrating members (not shown) will be described in further detail. Although cartridge **500** is shown with a chamfered outer periphery, it should also be understood that less chamfered and unchamfered embodiments of the cartridge **500** may also be adapted for use with any embodiment of the present invention disclosed herein. The penetrating members slidably coupled to the cartridge may be a bare lancet or bare elongate member without outer molded part or body pieces as seen in conventional lancet. The bare design reduces cost and simplifies manufacturing of penetrating members for use with the present invention. The penetrating members may be retractable and held within the cartridge so that they are not able to be used again. The cartridge is replaceable with a new cartridge once all the piercing members have been used. The lancets or penetrating members may be fully contained in the used cartridge so at to minimize the chance of patient contact with such waste.

As can be seen in FIG. **49**, the cartridge **500** may include a plurality of cavities **501** for housing a penetrating member. In this embodiment, the cavity **501** may have a longitudinal opening **502** associated with the cavity. The cavity **501** may also have a lateral opening **503** allowing the penetrating member to exit radially outward from the cartridge. As seen in FIG. **49**, the outer radial portion of the cavity may be narrowed. The upper portion of this narrowed area may also be sealed or swaged to close the top portion **505** and define an enclosed opening **506** as shown in FIG. **50**. Optionally, the narrowed area **504** may retain an open top configuration, though in some embodiments, the foil over the gap is unbroken, preventing the penetrating member from lifting up or extending upward out of the cartridge. The narrowed portion **504** may act as a bearing and/or guide for the penetrating member. FIG. **51** shows that the opening **506** may have a variety of shapes such as but not limited to, circular, rectangular, triangular, hexagonal, square, or combinations of any or all of the previous shapes. Openings **507** (shown in phantom) for other microfluidics, capillary tubes, or the like may also be incorporated in the immediate vicinity of the opening **506**. In some optional embodiments, such openings **507** may be configured to surround the opening **506** in a concentric or other manner.

Referring now to FIG. **52**, the underside of a cartridge **500** will be described in further detail. This figures shows many features on one cartridge **500**. It should be understood that a cartridge may include some, none, or all of these features, but they are shown in FIG. **52** for ease of illustration. The underside may include indentations or holes **510** close to the inner periphery for purpose of properly positioning the cartridge to engage a penetrating member gripper and/or to allow an advancing device (shown in FIGS. **56**B and **56**C) to rotate the cartridge **500**. Indentations or holes **511** may be formed along various locations on the underside of cartridge **500** and may assume various shapes such as but not limited to, circular, rectangular, triangular, hexagonal, square, or combinations of any or all of the previous shapes. Notches **512** may also be formed along the inner surface of the cartridge **500** to assist in alignment and/or rotation of the cartridge. It should be understood of course that some of these features may also be placed on the topside of the cartridge in areas not occupied by cavities **501** that house the penetrating members. Notches **513** may also be incorporated along the outer periphery of the cartridge. These notches **513** may be used to gather excess

material from the sterility barrier **28** (not shown) that may be used to cover the angled portion **514** of the cartridge. In the present embodiment, the cartridge has a flat top surface and an angled surface around the outside. Welding a foil type sterility barrier over that angled surface, the foil folds because of the change in the surfaces which is now at 45 degrees. This creates excess material. The grooves or notches **513** are there as a location for that excess material. Placing the foil down into those grooves **513** which may tightly stretch the material across the 45 degree angled surface. Although in this embodiment the surface is shown to be at 45 degrees, it should be understood that other angles may also be used. For example, the surface may be at any angle between about 3 degrees to 90 degrees, relative to horizontal. The surface may be squared off. The surface may be unchamfered. The surface may also be a curved surface or it may be combinations of a variety of angled surfaces, curved and straights surfaces, or any combination of some or all of the above.

Referring now to FIGS. **53-54**, the sequence in which the cartridge **500** is indexed and penetrating members are actuated will now be described. It should be understood that some steps described herein may be combined or taken out of order without departing from the spirit of the invention. These sequence of steps provides vertical and horizontal movement used with the present embodiment to load a penetrating member onto the driver.

As previously discussed, each cavity on the cartridge may be individually sealed with a foil cover or other sterile enclosure material to maintain sterility until or just before the time of use. In the present embodiment, penetrating members are released from their sterile environments just prior to actuation and are loaded onto a launcher mechanism for use. Releasing the penetrating member from the sterile environment prior to launch allows the penetrating member in the present embodiment to be actuated without having to pierce any sterile enclosure material which may dull the tip of the penetrating member or place contaminants on the member as it travels towards a target tissue. A variety of methods may be used accomplish this goal.

FIG. **53**A shows one embodiment of penetrating member release device, which in this embodiment is a punch plate **520** that is shown in a see-through depiction for ease of illustration. The punch plate **520** may include a first portion **521** for piercing sterile material covering the longitudinal opening **502** and a second portion **522** for piercing material covering the lateral opening **503**. A slot **523** allows the penetrating member gripper to pass through the punch plate **520** and engage a penetrating member housed in the cartridge **500**. The second portion **522** of the punch plate down to engage sterility barrier angled at about a 45 degree slope. Of course, the slope of the barrier may be varied. The punch portion **522** first contacts the rear of the front pocket sterility barrier and as it goes down, the cracks runs down each side and the barrier is pressed down to the bottom of the front cavity. The rear edge of the barrier first contacted by the punch portion **522** is broken off and the barrier is pressed down, substantially cleared out of the way. These features may be more clearly seen in FIG. **53**B. The punch portion **521** may include a blade portion down the centerline. As the punch comes down, that blade may be aligned with the center of the cavity, cutting the sterility barrier into two pieces. The wider part of the punch **521** then pushes down on the barrier so the they align parallel to the sides of the cavity. This creates a complete and clear path for the gripper throughout the longitudinal opening of the cavity. Additionally, as seen in FIGS. **53**B and **54**A, a plurality of protrusion **524** are positioned to engage a cam (FIG. **55**A) which sequences the punching and other vertical movement of punch plate **520** and cartridge pusher **525**. The drive shaft **526** from a force generator (not shown) which is used to actuate the penetrating member **527**.

Referring now to FIGS. **54**A-F, the release and loading of the penetrating members are achieved in the following sequence. FIG. **54**A shows the release and loading mechanism in rest state with a dirty bare penetrating member **527** held in a penetrating member gripper **530**. This is the condition of the device between lancing events. When the time comes for the patient to initiate another lancing event, the used penetrating member is cleared and a new penetrating member is loaded, just prior to the actual lancing event. The patient begins the loading of a new penetrating member by operating a setting lever to initiate the process. The setting lever may operate mechanically to rotate a cam (see FIG. **55**A) that moves the punch plate **520** and cartridge pusher **525**. In other embodiments, a stepper motor or other mover such as but not limited to, a pneumatic actuator, hydraulic actuator, or the like are used to drive the loading sequence.

FIG. **54**B shows one embodiment of penetrating member gripper **530** in more detail. The penetrating member gripper **530** may be in the form of a tuning fork with sharp edges along the inside of the legs contacting the penetrating member. In some embodiments, the penetrating member may be notched, recessed, or otherwise shaped to receive the penetrating member gripper. As the gripper **530** is pushed down on the penetrating member, the legs are spread open elastically to create a frictional grip with the penetrating member such as but not limited to bare elongate wires without attachments molded or otherwise attached thereon. In some embodiments, the penetrating member is made of a homogenous material without any additional attachments that are molded, adhered, glued or otherwise added onto the penetrating member.

In some embodiments, the gripper **530** may cut into the sides of the penetrating member. The penetrating member in one embodiment may be about 300 microns wide. The grooves that form in the side of the penetrating member by the knife edges are on the order of about 5-10 microns deep and are quite small. In this particular embodiment, the knife edges allow the apparatus to use a small insertion force to get the gripper onto the penetrating member, compared to the force to remove the penetrating member from the gripper the longitudinal axis of an elongate penetrating member. Thus, the risk of a penetrating member being detached during actuation are reduced. The gripper **530** may be made of a variety of materials such as, but not limited to high strength carbon steel that is heat treated to increased hardness, ceramic, substrates with diamond coating, composite reinforced plastic, elastomer, polymer, and sintered metals. Additionally, the steel may be surface treated. The gripper **130** may have high gripping force with low friction drag on solenoid or other driver.

As seen in FIG. **54**C, the sequence begins with punch plate **520** being pushed down. This results in the opening of the next sterile cavity **532**. In some embodiment, this movement of punch plate **520** may also result in the crimping of the dirty penetrating member to prevent it from being used again. This crimping may result from a protrusion on the punch plate bending the penetrating member or pushing the penetrating member into a groove in the cartridge that hold the penetrating member in place through an interference fit. As seen in FIGS. **53**B and **54**C, the punch plate **520** has a protrusion or punch shaped to penetrate a longitudinal opening **502** and a lateral opening **503** on the cartridge. The first portion **521** of the punch that opens cavity **532** is shaped to first pierce the sterility barrier and then push, compresses, or otherwise moves sterile enclosure material towards the sides of the longitudinal opening **502**. The second portion **522** of the

punch pushes down the sterility barrier at lateral opening or penetrating member exit **503** such that the penetrating member does not pierce any materials when it is actuated toward a tissue site.

Referring now to FIG. **54**D, the cartridge pusher **525** is engaged by the cam **550** (not shown) and begins to push down on the cartridge **500**. The punch plate **520** also travels downward with the cartridge **500** until it is pushed down to it maximum downward position, while the penetrating member gripper **530** remains vertically stationary. This joint downward motion away from the penetrating member gripper **530** will remove the penetrating member from the gripper. The punch plate **520** essentially pushes against the penetrating member with protrusion **534** (FIG. **55**A), holding the penetrating member with the cartridge, while the cartridge **500** and the punch plate **520** is lowered away from the penetrating member gripper **530** which in this embodiment remains vertically stationary. This causes the stripping of the used penetrating member from the gripper **530** (FIG. **45**D) as the cartridge moves relative to the gripper.

At this point as seen in FIG. **54**E, the punch plate **520** retracts upward and the cartridge **500** is pushed fully down, clear of the gripper **530**. Now cleared of obstructions and in a rotatable position, the cartridge **500** increments one pocket or cavity in the direction that brings the newly released, sterile penetrating member in cavity **532** into alignment with the penetrating member gripper **530**, as see in FIG. **54**F. The rotation of the cartridge occurs due to fingers engaging the holes or indentations **533** on the cartridge, as seen in FIG. **54**A. In some embodiments, these indentations **533** do not pass completely through cartridge **500**. In other embodiments, these indentations are holes passing completely through. The cartridge has a plurality of little indentations **533** on the top surface near the center of the cartridge, along the inside diameter. In the one embodiment, the sterility barrier is cut short so as not to cover these plurality of indentations **533**. It should be understood of course that these holes may be located on bottom, side or other accessible surface. These indentations **533** have two purposes. The apparatus may have one or a plurality of locator pins, static pins, or other keying feature that dos not move. In this embodiment, the cartridge will only set down into positions where the gripper **530** is gripping the penetrating member. To index the cassette, the cartridge is lifted off those pins or other keyed feature, rotated around, and dropped onto those pins for the next position. The rotating device is through the use of two fingers: one is a static pawl and the other one is a sliding finger. They engage with the holes **533**. The fingers are driven by a slider that may be automatically actuated or actuated by the user. This maybe occur mechanically or through electric or other powered devices. Halfway through the stroke, a finger may engage and rotate around the cartridge. A more complete description can be found with text associated with FIGS. **56**B-**56**C.

Referring now to FIG. **54**G, with the sterile penetrating member in alignment, the cartridge **500** is released as indicated by arrows **540** and brought back into contact with the penetrating member gripper **530**. The new penetrating member **541** is inserted into the gripper **530**, and the apparatus is ready to fire once again. After launch and in between lancing events for the present embodiment, the bare lancet or penetrating member **541** is held in place by gripper **530**, preventing the penetrating member from accidentally protruding or sliding out of the cartridge **500**.

It should be understood of course, that variations can be added to the above embodiment without departing from the spirit of the invention. For example, the penetrating member **541** may be placed in a parked position in the cartridge **500** prior to launch. As seen in FIG. **55**A, the penetrating member is held by a narrowed portion **542** of the cartridge, creating an interference fit which pinches the proximal end of the penetrating member. Friction from the molding or cartridge holds the penetrating member during rest, preventing the penetrating member from sliding back and forth. Of course, other methods of holding the penetrating member may also be used. As seen in FIG. **55**B prior to launch, the penetrating member gripper **530** may pull the penetrating member **541** out of the portion **542**. The penetrating member **541** may remain in this portion until actuated by the solenoid or other force generator coupled to the penetrating member gripper. A cam surface **544** may be used to pull the penetrating member out of the portion **542**. This mechanical cam surface may be coupled to the mechanical slider driven by the patient, which may be considered a separate force generator. Thus, energy from the patient extracts the penetrating member and this reduces the drain on the device's battery if the solenoid or electric driver were to pull out the penetrating member. The penetrating member may be moved forward a small distance (on the order of about 1 mm or less) from its parked position to pull the penetrating member from the rest position gripper. After penetrating tissue, the penetrating member may be returned to the cartridge and eventually placed into the parked position. This may also occur, though not necessarily, through force provided by the patient. In one embodiment, the placing of the lancet into the parked position does not occur until the process for loading a new penetrating member is initiated by the patient. In other embodiments, the pulling out of the parked position occurs in the same motion as the penetrating member actuation. The return into the parked position may also be considered a continuous motion.

FIG. **55**A also shows one embodiment of the cam and other surfaces used to coordinate the motion of the punch plate **520**. For example, cam **550** in this embodiment is circular and engages the protrusions **524** on the punch plate **520** and the cartridge pusher **525**. FIG. **55**A also more clearly shows protrusion **534** which helps to hold the penetrating member in the cartridge **500** while the penetrating member gripper **530** pulls away from the member, relatively speaking. A ratchet surface **552** that rotates with the cam **550** may be used to prevent the cam from rotating backwards. The raising and lower of cartridge **500** and punch plate **50** used to load/unload penetrating members may be mechanically actuated by a variety of cam surfaces, springs, or the like as may be determined by one skilled in the art. Some embodiments may also use electrical or magnetic device to perform the loading, unloading, and release of bare penetrating members. Although the punch plate **520** is shown to be punching downward to displace, remove, or move the foil or other sterile environment enclosure, it should be understood that other methods such as stripping, pulling, tearing, or some combination of one or more of these methods may be used to remove the foil or sterile enclosure. For example, in other embodiments, the punch plate **520** may be located on an underside of the cartridge and punch upward. In other embodiments, the cartridge may remain vertically stationary while other parts such as the penetrating member gripper and punch plate move to load a sterile penetrating member on to the penetrating member gripper.

FIG. **55**B also shows other features that may be included in the present apparatus. A fire button **560** may be included for the user to actuate the penetrating member. A front end interface **561** may be included to allow a patient to seat their finger or other target tissue for lancing. The interface **561** may be removable to be cleaned or replaced. A visual display **562**

may be included to show device status, lancing performance, error reports, or the like to the patient.

Referring now to FIG. **56**A, a mechanical slider **564** used by the patient to load new penetrating member may also be incorporated on the housing. The slider **564** may also be coupled to activate an LCD or visual display on the lancing apparatus. In addition to providing a source of energy to index the cartridge, the slider **564** may also switch the electronics to start the display. The user may use the display to select the depth of lancing or other feature. The display may go back to sleep again until it is activated again by motion of the slider **564**. The underside the housing **566** may also be hinged or otherwise removable to allow the insertion of cartridge **500** into the device. The cartridge **500** may be inserted using technology current used for insertion of a compact disc or other disc into a compact disc player. In one embodiment, there may be a tray which is deployed outward to receive or to remove a cartridge. The tray may be withdrawn into the apparatus where it may be elevated, lowered, or otherwise transported into position for use with the penetrating member driver. In other embodiments, the apparatus may have a slot into which the cartridge is partially inserted at which point a mechanical apparatus will assist in completing insertion of the cartridge and load the cartridge into proper position inside the apparatus. Such device is akin to the type of compact disc player found on automobiles. The insertions/ejection and loading apparatus of these compact disc players uses gears, pulleys, cables, trays, and/or other parts that may be adapted for use with the present invention.

Referring now to FIG. **56**B, a more detailed view of one embodiment of the slider **564** is provided. In this embodiment, the slider **564** will move initially as indicated by arrow **567**. To complete the cycle, the patient will return the slider to its home position or original starting position as indicated by arrow **568**. The slider **564** has an arm **569** which moves with the slider to rotate the cam **550** and engage portions **522**. The motion of the slider **564** is also mechanically coupled to a finger **570** which engage the indentations **571** on cartridge **500**. The finger **570** is synchronized to rotate the cartridge **500** by pulling as indicated by arrow **572** in the same plane as the cartridge. It should be understood that in some embodiments, the finger **570** pushes instead of pulls to rotate the cartridge in the correct direction. The finger **570** may also be adapted to engage ratchet surfaces **706** as seen in FIG. **66** to rotate a cartridge. The finger **570** may also incorporate vertical motion to coordinate with the rising and lowering of the cartridge **500**. The motion of finger **570** may also be powered by electric actuators such as a stepper motor or other device useful for achieving motion. FIG. **56**B also shows a portion of the encoder **573** used in position sensing.

Referring now to FIG. **56**C, a still further view of the slider **564** and arm **569** is shown. The arm **569** moves to engage portion **522** as indicated by arrow **575** and this causes the cam **550** to rotate as indicated by arrow **577**. In this particular embodiment, the cam **550** rotates about ⅛ of an rotation with each pull of the slider **564**. When the slider **564** is return to its home or start position, the arm **569** rides over the portion **522**. The movement of the slider also allows the cam surface **544** to rotate about pivot point **579**. A resilient member **580** may be coupled to the cam surface **544** to cause it to rotate counter-clockwise when the arm **569** moves in the direction of arrow **567**. The pin **580** will remain in contact with the arm **569**. As the cam surface **544** rotates a first surface **582** will contact the pin **583** on the gripper block **584** and pull the pin **583** back to park a penetrating member into a coupling or narrowed portion **542** of the cartridge **500** as seen in FIG. **55**A. As the arm **569** is brought back to the home position, the cam surface **544** rotates back and a second surface **586** that rotates clockwise and pushes the penetrating member forward to be released from the narrowed portion **542** resulting in a position as seen in FIG. **55**B. It should be understood that in some embodiments, the release and/or parking of lancet from portion **542** may be powered by the driver **588** without using the mechanical assistance from cam surface **544**.

In another embodiment of the cartridge device, a mechanical feature may be included on the cartridge so that there is only one way to load it into the apparatus. For example, in one embodiment holding 50 penetrating members, the cartridge may have 51 pockets or cavities. The 51st pocket will go into the firing position when the device is loaded, thus providing a location for the gripper to rest in the cartridge without releasing a penetrating member from a sterile environment. The gripper **530** in that zeroth position is inside the pocket or cavity and that is the reason why one of the pockets may be empty. Of course, some embodiments may have the gripper **530** positioned to grip a penetrating member as the cartridge **500** is loaded into the device, with the patient lancing themselves soon afterwards so that the penetrating member is not contaminated due to prolonged exposure outside the sterile enclosure. That zeroth position may be the start and finish position. The cartridge may also be notched to engaged a protrusion on the apparatus, thus also providing a method for allowing the penetrating member to loaded or unloaded only in one orientation. Essentially, the cartridge **500** may be keyed or slotted in association with the apparatus so that the cartridge **500** can only be inserted or removed at one orientation. For example as seen in FIG. **56**D, the cartridge **592** may have a keyed slot **593** that matches the outline of a protrusion **594** such that the cartridge **592** may only be removed upon alignment of the slot **593** and protrusion **594** upon at the start or end positions. It should be understood that other keyed technology may be used and the slot or key may be located on an outer periphery or other location on the cartridge **592** in manner useful for allowing insertion or removal of the cartridge from only one or a select number of orientations.

Referring now to FIG. **57**, a cross-section of another embodiment of a cavity **600** housing a penetrating member is shown. The cavity **600** may include a depression **602** for allowing the gripper **530** to penetrate sufficiently deeply into the cavity to frictionally engage the penetrating member **541**. The penetrating member may also be housed in a groove **604** that holds the penetrating member in place prior to and after actuation. The penetrating member **541** is lifted upward to clear the groove **604** during actuation and exits through opening **506**.

Referring now to FIG. **58**, another variation on the system according to the present invention will now be described. FIG. **58** shows a lancing system **610** wherein the penetrating members have their sharpened tip pointed radially inward. The finger or other tissue of the patient is inserted through the center hole **611** to be pierced by the member **612**. The penetrating member gripper **530** coupled to drive force generator **613** operate in substantially the same manner as described in FIGS. **54**A-G. The punch portions **521** and **522** operate in substantially the same manner to release the penetrating members from the sterile enclosures. The punch portion **522** may be placed on the inner periphery of the device, where the penetrating member exit is now located, so that sterile enclosure material is cleared out of the path of the penetrating member exit.

Referring now to FIG. **59**, a still further variation on the lancing system according to the present invention will now be described. In the embodiments shown in FIGS. **53**-**54**, the

penetrating member gripper **530** approaches the penetrating member from above and at least a portion of the drive system is located in a different plane from that of the cartridge **500**. FIG. **59** shows an embodiment where the penetrating member driver **620** is in substantially the same plane as the penetrating member **622**. The coupler **624** engages a bent or L shaped portion **626** of the member **622**. The cartridge **628** can rotate to engage a new penetrating member with the coupler **624** without having to move the cartridge or coupler vertically. The next penetrating member rotates into position in the slot provided by the coupler **624**. A narrowed portion of the cartridge acts as a penetrating member guide **630** near the distal end of the penetrating member to align the penetrating member as it exits the cartridge.

The coupler **624** may come in a variety of configurations. For example, FIG. **60**A shows a coupler **632** which can engage a penetrating member **633** that does not have a bent or L-shaped portion. A radial cartridge carrying such a penetrating member **633** may rotate to slide penetrating member into the groove **634** of the coupler **632**. FIG. **60**B is a front view showing that the coupler **632** may include a tapered portion **636** to guide the penetrating member **633** into the slot **634**. FIG. **60**C shows an embodiment of the driver **620** using a coupler **637** having a slot **638** for receiving a T-shaped penetrating member. The coupler **637** may further include a protrusion **639** that may be guided in an overhead slot to maintain alignment of the drive shaft during actuation.

Referring now to FIG. **61**, a cartridge **640** for use with an in-plane driver **620** is shown. The cartridge **640** includes an empty slot **642** that allows the cartridge to be placed in position with the driver **620**. In this embodiment, the empty slot **642** allows the coupler **644** to be positioned to engage an unused penetrating member **645** that may be rotated into position as shown by arrow **646**. As seen in FIG. **61**, the cartridge **640** may also be designed so that only the portion of the penetrating member that needs to remain sterile (i.e. the portions that may actually be penetrating into tissue) are enclosed. As seen in FIG. **61**, a proximal portion **647** of the penetrating member is exposed. This exposed proximal portion may be about 70% of the penetrating member. In other embodiments it may be between about 69% to about 5% of the penetrating member. The cartridge **640** may further include, but not necessarily, sealing protrusions **648**. These protrusions **648** are releasably coupled to the cartridge **640** and are removed from the cartridge **640** by remover **649** as the cartridge rotates to place penetrating member **645** into the position of the active penetrating member. The sterile environment is broken prior to actuation of the member **645** and the member does not penetrate sterile enclosure material that may dull the tip of the penetrating member during actuation. A fracturable seal material **650** may be applied to the member to seal against an inner peripheral portion of the cartridge.

Referring now to FIG. **62**, a still further embodiment of a cartridge for use with the present invention will be described. This cartridge **652** includes a tapered portion **654** for allowing the coupler **655** to enter the cavity **656**. A narrowed portion **657** guides the penetrating member **658**. The coupler **655** may have, but does not necessarily have, movable jaws **659** that engage to grip the penetrating member **658**. Allowing the coupler to enter the cavity **656** allows the alignment of the penetrating member to be better maintained during actuation. This tapered portion **654** may be adapted for use with any embodiment of the cartridge disclosed herein.

Referring now to FIG. **63**, a linear cartridge **660** for use with the present invention will be described. Although the present invention has been shown in use with radial cartridges, the lancing system may be adapted for use with cartridges of other shapes. FIGS. **79-83** show other cartridges of varying shapes adaptable for use with the present invention. FIG. **63** illustrates a cartridge **660** with only a portion **662** providing sterile protection for the penetrating members. The cartridge **660**, however, provides a base **664** on which a penetrating member **665** can rest. This provides a level of protection of the penetrating member during handling. The base **664** may also be shaped to provide slots **666** in which a penetrating member **667** may be held. The slot **666** may also be adapted to have a tapered portion **668**. These configurations may be adapted for use with any of the embodiments disclosed herein, such as the cartridge **652**.

Referring now to FIGS. **64**A-**64**C, a variety of different devices are shown for releasing the sterility seal covering a lateral opening **503** on the cartridge **500**. FIG. **64**A shows a rotating punch device **670** that has protrusions **672** that punch out the sterility barrier creating openings **674** from which a penetrating member can exit without touching the sterility barrier material. FIG. **64**B shows a vertically rotating device **676** with shaped protrusions **678** that punch down the sterility barrier **679** as it is rotated to be in the active, firing position. FIG. **64**C shows a punch **680** which is positioned to punch out barrier **682** when the cartridge is lowered onto the punch. The cartridge is rotated and the punch **680** rotates with the cartridge. After the cartridge is rotated to the proper position and lifted up, the punch **680** is spring loaded or otherwise configured to return to the position to engage the sterility barrier covering the next unused penetrating member.

Referring now to FIG. **65**A-**65**B, another type of punch mechanism for use with a punch plate **520** will now be described. The device shown in FIGS. **53-54** shows a mechanism that first punches and then rotates or indexes the released penetrating member into position. In this present embodiment, the cartridge is rotated first and then the gripper and punch may move down simultaneously. FIG. **65**A shows a punch **685** having a first portion **686** and a second portion **687**. As seen in cross-sectional view of FIG. **65**B, the penetrating member gripper **690** is located inside the punch **685**. Thus the penetrating of the sterility barrier is integrated into the step of engaging the penetrating member with the gripper **690**. The punch **685** may include a slot **692** allowing a portion **694** of the gripper **690** to extend upward. A lateral opening **695** is provided from which a penetrating member may exit. In some embodiments, the punch portion **687** is not included with punch **686**, instead relying on some other mechanism such as those shown in FIGS. **64**A-**64**C to press down on barrier material covering a lateral opening **503**.

Referring now to FIG. **66**, a still further embodiment of a cartridge according to the present invention will be described. FIG. **66** shows a cartridge **700** with a plurality of cavities **702** and individual deflectable portions or fingers **704**. The ends of the protective cavities **702** may be divided into individual fingers (such as one for each cavity) on the outer periphery of the disc. Each finger **704** may be individually sealed with a foil cover (not shown for ease of illustration) to maintain sterility until the time of use. Along the inner periphery of the cartridge **700** are raised step portions **706** to create a ratchet type mechanism. As seen in FIG. **67**, a penetrating member **708** may be housed in each cavity. The penetrating member may rest on a raised portion **710**. A narrowed portion **712** pinches the proximal portions of the penetration member **708**. Each cavity may include a wall portion **714** into which the penetrating member **708** may be driven after the penetrating member has been used. FIG. **68** shows the penetrating member gripper **716** lowered to engage a penetrating member **708**. For ease of illustration, a sterility barrier covering each of the cavities is not shown.

Referring now to FIGS. **69**A-**69**L, the sequence of steps for actuating a penetrating member in a cartridge **700** will be described. It should be understood that in other embodiments, steps may be combined or reduced without departing from the spirit of the present invention. The last penetrating member to be used may be left in a retracted position, captured by a gripper **716**. The end of the protective cavity **704** may be deflected downward by the previous actuation. The user may operate a mechanism such as but not limited to a thumbwheel, lever, crank, slider, etc. . . . that advances a new penetrating member **720** into launch position as seen in FIG. **69**A. The mechanism lifts a bar that allows the protective cavity to return to its original position in the plane of the disc.

In this embodiment as shown in FIG. **69**B, the penetrating member guide **722** presses through foil in rear of pocket to "home" penetrating member and control vertical clearance. For ease of illustration, actuation devices for moving the penetrating member guide **722** and other mechanisms are not shown. They may be springs, cams, or other devices that can lower and move the components shown in these figures. In some embodiments, the cartridge **700** may be raised or lowered to engage the penetrating member guide **722** and other devices.

As seen in FIG. **69**C, the plough or sterile enclosure release device **724** is lowered to engage the cartridge **700**. In some embodiments, the disc or cartridge **700** may raised part way upward until a plough or plow blade **724** pierces the sterility barrier **726** which may be a foil covering.

Referring now to FIG. **69**D, the plough **724** clears foil from front of pocket and leaves it attached to cartridge **700**. The plough **724** is driven radially inward, cutting open the sterility barrier and rolling the scrap into a coil ahead of the plough. Foil naturally curls over and forms tight coil when plough lead angle is around 55 degs to horizontal. If angle of the plough may be between about 60-40 degs, preferably closer to 55 degs. In some embodiments, the foil may be removed in such a manner that the penetrating member does not need to pierce any sterile enclosure materials during launch.

Referring now to FIG. **69**E, the gripper **716** may be lowered to engage the bare penetrating member or piercing member **720**. Optionally, the disc or cartridge **8000** may be raised until the penetrating member **720** is pressed firmly into the gripper **716**. Although not shown in the present figure, the penetrating member driver or actuator of the present embodiment may remain in the same horizontal plane as the penetrating member.

As seen in FIG. **69**F, a bar **730** may be pressed downward on the outer end **732** of the protective cavity to deflect it so it is clear of the path of the penetrating member. In the present embodiment, the bar **730** is shaped to allow the bare penetrating member **720** to pass through. It should be understood that other shapes and orientations of the bar (such as contacting only one side or part of end **732**) may be used to engage the end **732**.

Referring now to FIG. **69**G, an electrical solenoid or other electronic or feed-back controllable drive may actuate the gripper **716** radially outward, carrying the bare penetrating member **720** with it. The bare penetrating member projects from the protective case and into the skin of a finger or other tissue site that has been placed over the aperture of the actuator assembly. Suitable penetrating member drivers are described in commonly assigned, copending U.S. patent application Ser. No. 10/127,395 filed Apr. 19, 2002.

Referring now to FIG. **69**H, the solenoid or other suitable penetrating member driver retracts the bare penetrating member **720** into a retracted position where it parks until the beginning of the next lancing cycle.

Referring now to FIG. **69**I, bar **730** may be released so that the end **150** returns to an in-plane configuration with the cartridge **800**.

As seen in FIG. **69**J, the gripper **716** may drive a used bare penetrating member radially outward until the sharpened tip is embedded into a plastic wall **714** at or near the outward end **732** of the cavity thus immobilizing the contaminated penetrating member.

As seen in FIGS. **69**K and **69**L, the plough **724**, the gripper **716**, and penetrating member guide **722** may all be disengaged from the bare penetrating member **720**. Optionally, it should be understood that the advance mechanism may lower the cartridge **700** from the gripper **716**. The used penetrating member, restrained by the tip embedded in plastic, and by the cover foil at the opposite end, is stripped from the gripper. The disc or cartridge **700** may be rotated until a new, sealed; sterile penetrating member is in position under the launch mechanism.

Referring now to FIGS. **70** and **71**, one object for some embodiments of the invention is to include blood sampling and sensing on this penetrating member actuation device. In the present embodiment, the drive mechanism (gripper **738** and solenoid drive coil **739**) may be used to drive a penetrating member into the skin and couple this lancing event to acquire the blood sample as it forms at the surface of the finger. In a first embodiment shown in FIG. **70**, microfluidic module **740** bearing the analyte sensor chemistry and detection device **742** (FIG. **71**) is couple on to the shaft of the penetrating member **720**. The drive cycle described above may also actuate the module **740** so that it rests at the surface of the finger to acquire blood once the penetrating member retracts from the wound. The module **740** is allowed to remain on the surface of the finger or other tissue site until the gripper **738** has reached the back end **744** of the microfluidics module **740**, at which point the module is also retracted into the casing. The amount of time the module **740** remains on the finger, in this embodiment, may be varied based on the distance the end **744** is located and the amount of time it takes the gripper to engage it on the withdrawal stroke. The blood filled module **740**, filled while the module remains on pierced tissue site, may then undergo analyte detection by means such as optical or electrochemical sensing.

The blood may be filled in the lumen that the penetrating member was in or the module may have separately defined sample chambers to the side of the penetrating member lumen. The sensor may also be placed right at the immediate vicinity or slightly setback from the module opening receiving blood so that low blood volumes will still reach the sensor. In some embodiments, the analyte sensing device and a visual display or other interface may be on board the apparatus and thus provide a readout of analyte levels without need to plug apparatus or a test strip into a separate reader device. As seen in FIG. **71**, the cover **746** may also be clear to allow for light to pass through for optical sensing. The sensor may be used with low volumes such as less than about 1 microliter of sample, preferably less than about 0.6 microliter, more preferably less than about 0.3 microliter, and most preferably less than about 0.1 microliter of sample.

In another embodiment as seen in FIG. **72**, sensing elements **760** may be directly printed or formed on the top of bottom of the penetrating member cartridge **700**, depending on orientation. The bare penetrating member **720** is then actuated through a hole **762** in the plastic facing, withdrawn into the radial cavity followed by the blood sample. Electrochemical or optical detection for analyte sensing may then be carried out (FIG. **72**). Again the cavity **766** may have a clear portion to allow light to pass for optical sensing. In one

embodiment, a multiplicity of miniaturized sensor fields may be placed on the floor of the radial cavity as shown in FIG. **72** or on the microfluidic module shown in FIG. **71** to allow many tests on a single analyte form a single drop of blood to improve accuracy and precision of measurement. Although not limited in this manner, additional sensor fields or regions may also be included for calibration or other purposes.

Referring now to FIG. **73**, a still further embodiment of a cartridge according to the present invention will be described. FIG. **73** shows one embodiment of a cartridge **800** which may be removably inserted into an apparatus for driving penetrating members to pierce skin or other tissue. The cartridge **800** has a plurality of penetrating members **802** that may be individually or otherwise selectively actuated so that the penetrating members **802** may extend outward from the cartridge, as indicated by arrow **804**, to penetrate tissue. In the present embodiment, the cartridge **800** may be based on a flat disc with a number of penetrating members such as, but in no way limited to, (25, 50, 75, 100, . . .) arranged radially on the disc or cartridge **800**. It should be understood that although the cartridge **800** is shown as a disc or a disc-shaped housing, other shapes or configurations of the cartridge may also work without departing from the spirit of the present invention of placing a plurality of penetrating members to be engaged by a penetrating member driver.

Each penetrating member **802** may be contained in a molded cavity **806** in the cartridge **800** with the penetrating member's sharpened end facing radially outward and may be in the same plane as that of the cartridge. Although not limited in this manner, the ends of the protective cavities **806** may be divided into individual fingers (such as one for each cavity) on the outer periphery of the disc. The particular shape of each cavity **806** may be designed to suit the size or shape of the penetrating member therein or the amount of space desired for placement of the analyte sensors **808**. For example and not limitation, the cavity **806** may have a V-shaped cross-section, a U-shaped cross-section, C-shaped cross-section, a multi-level cross section or the other cross-sections. The opening **810** through which a penetrating member **802** may exit to penetrate tissue may also have a variety of shapes, such as but not limited to, a circular opening, a square or rectangular opening, a U-shaped opening, a narrow opening that only allows the penetrating member to pass, an opening with more clearance on the sides, a slit, a configuration as shown in FIG. **75**, or the other shapes.

After actuation, the penetrating member **802** is returned into the cartridge and may be held within the cartridge **800** in a manner so that it is not able to be used again. By way of example and not limitation, a used penetrating member may be returned into the cartridge and held by the launcher in position until the next lancing event. At the time of the next lancing, the launcher may disengage the used penetrating member with the cartridge **800** turned or indexed to the next clean penetrating member such that the cavity holding the used penetrating member is position so that it is not accessible to the user (i.e. turn away from a penetrating member exit opening). In some embodiments, the tip of a used penetrating member may be driven into a protective stop that hold the penetrating member in place after use. The cartridge **800** is replaceable with a new cartridge **800** once all the penetrating members have been used or at such other time or condition as deemed desirable by the user.

Referring still to FIG. **73**, the cartridge **800** may provide sterile environments for penetrating members via seals, foils, covers, polymeric, or similar materials used to seal the cavities and provide enclosed areas for the penetrating members to rest in. In the present embodiment, a foil or seal layer **820** is applied to one surface of the cartridge **800**. The seal layer **820** may be made of a variety of materials such as a metallic foil or other seal materials and may be of a tensile strength and other quality that may provide a sealed, sterile environment until the seal layer **820** is penetrate by a suitable or penetrating device providing a preselected or selected amount of force to open the sealed, sterile environment. Each cavity **806** may be individually sealed with a layer **820** in a manner such that the opening of one cavity does not interfere with the sterility in an adjacent or other cavity in the cartridge **800**. As seen in the embodiment of FIG. **73**, the seal layer **820** may be a planar material that is adhered to a top surface of the cartridge **800**.

Depending on the orientation of the cartridge **800** in the penetrating member driver apparatus, the seal layer **820** may be on the top surface, side surface, bottom surface, or other positioned surface. For ease of illustration and discussion of the embodiment of FIG. **73**, the layer **820** is placed on a top surface of the cartridge **800**. The cavities **806** holding the penetrating members **802** are sealed on by the foil layer **820** and thus create the sterile environments for the penetrating members. The foil layer **820** may seal a plurality of cavities **806** or only a select number of cavities as desired.

In a still further feature of FIG. **73**, the cartridge **800** may optionally include a plurality of analyte sensors **808** on a substrate **822** which may be attached to a bottom surface of the cartridge **800**. The substrate may be made of a material such as, but not limited to, a polymer, a foil, or other material suitable for attaching to a cartridge and holding the sensors **808**. As seen in FIG. **73**, the substrate **822** may hold a plurality of sensors, such as but not limited to, about 10-50, 50-100, or other combinations of sensors. This facilitates the assembly and integration of sensors **808** with cartridge **800**. These sensors **808** may enable an integrated body fluid sampling system where the penetrating members **802** create a wound tract in a target tissue, which expresses body fluid that flows into the cartridge for analyte detection by at least one of the sensors **808**. The substrate **822** may contain any number of analyte sensors **808** suitable for detecting analytes in cartridge having a plurality of cavities **806**. In one embodiment, many analyte sensors **808** may be printed onto a single substrate **822** which is then adhered to the cartridge to facilitate manufacturing and simplify assembly. The sensors **808** may be electrochemical in nature. The sensors **808** may further contain enzymes, dyes, or other detectors which react when exposed to the desired analyte. Additionally, the sensors **808** may comprise of clear optical windows that allow light to pass into the body fluid for analyte analysis. The number, location, and type of sensor **808** may be varied as desired, based in part on the design of the cartridge, number of analytes to be measured, the need for sensor calibration, and the sensitivity of the sensors. If the cartridge **800** uses a sensor arrangement where the sensors are on a substrate attached to the bottom of the cartridge, there may be through holes (as shown in FIG. **76**), wicking elements, capillary tube or other devices on the cartridge **800** to allow body fluid to flow from the cartridge to the sensors **808** for analysis. In other configurations, the sensors **808** may be printed, formed, or otherwise located directly in the cavities housing the penetrating members **802** or areas on the cartridge surface that receive blood after lancing.

The use of the seal layer **820** and substrate or sensor layer **822** may facilitate the manufacture of these cartridges **10**. For example, a single seal layer **820** may be adhered, attached, or otherwise coupled to the cartridge **800** as indicated by arrows **824** to seal many of the cavities **806** at one time. A sheet **822** of sensors may also be adhered, attached, or otherwise coupled to the cartridge **800** as indicated by arrows **825** to

provide many sensors on the cartridge at one time. During manufacturing of one embodiment of the present invention, the cartridge **800** may be loaded with penetrating members **802**, sealed with layer **820** and a temporary layer (not shown) on the bottom where substrate **822** would later go, to provide a sealed environment for the penetrating members. This assembly with the temporary bottom layer is then taken to be sterilized. After sterilization, the assembly is taken to a clean room where the temporary bottom layer is removed and the substrate **822** with sensors is coupled to the cartridge as shown in FIG. **73**. This process allows for the sterile assembly of the cartridge with the penetrating members **802** using processes and/or temperatures that may degrade the accuracy or functionality of the sensors on substrate **822**.

In some embodiments, more than one seal layer **820** may be used to seal the cavities **806**. As examples of some embodiments, multiple layers may be placed over each cavity **806**, half or some selected portion of the cavities may be sealed with one layer with the other half or selected portion of the cavities sealed with another sheet or layer, different shaped cavities may use different seal layer, or the like. The seal layer **820** may have different physical properties, such as those covering the penetrating members **802** near the end of the cartridge may have a different color such as red to indicate to the user (if visually inspectable) that the user is down to say 10, 5, or other number of penetrating members before the cartridge should be changed out.

Referring now to FIGS. **74** and **75**, one embodiment of the microfluidics used with the sensors **808** in cartridge **800** will now be described. For ease of illustration, the shape of cavity **806** has been simplified into a simple wedge shape. It should be understood that more sophisticated configurations such as that shown in FIG. **73** may be used. FIG. **74** shows a channel **826** that assists in drawing body fluid towards the sensors **808**. In the present embodiment, two sensors **808** are shown in the cavity **806**. This is purely for illustrative purposes as the cavity **806** may have only one sensor or any other number of sensors as desired. Body fluid entering cavity **806**, while filling part of the cavity, will also be drawn by capillary action through the groove **826** towards the sensors **808**.

FIG. **75** shows a perspective view of a cutout of the cavity **806**. The penetrating member **802** (shown in phantom) is housed in the cavity **806** and may extend outward through a penetrating member exit opening **830** as indicated by arrow **832**. The position of the tip of penetrating member **802** may vary, such as being near the penetrating member exit port or spaced apart from the exit. The location of the tip relative to the sensor **808** may also be varied, such as being spaced apart or away from the sensor or collocated or in the immediate vicinity of the sensor. Fluid may then enter the cavity **806** and directed by channel **826**. The channel **826** as shown in FIG. **75** is a groove that is open on top. The channel **826** may be entirely a groove with an open top or it may have a portion that is has a sealed top forming a lumen, or still further, the groove may be closed except for an opening near the penetrating member exit opening **830**. It should be understood that capillary action can be achieved using a groove having one surface uncovered. In some embodiments, the sensor **808** is positioned close to the penetrating member exit opening **830** so that the sensor **808** may not need a capillary groove or channel to draw body fluid, such as in FIG. **78**.

As seen in FIGS. **75** and **76**, the cavity **806** may include the substrate **822** coupled to its bottom surface containing the sensors **808**. With the sensors **808** located on the underside of the cartridge **800** as seen in FIG. **76**, the cartridge **800** may include at least one through hole **834** to provide a passage for body fluid to pass from the cavity **806** to the sensor **808**. The size, location, shape, and other features of the through hole **834** may be varied based on the cavity **806** and number of sensors **808** to be provided. In other embodiments, wicking elements or the like may be used to draw body fluid from the groove **826** to down to the sensor **808** via the through hole or holes **834**.

Referring now to FIG. **77**, a variety of groove and sensor configurations are shown on a single cartridge. These configurations are shown only for illustrative purposes and a single cartridge may not incorporate each of these configurations. It should be understood, however, that sensor configuration could be customized for each cavity, such as but not limited to, using a different number and location of sensors depending lancing variables associated with that cavity, such as the time of day of the lancing event, the type of analyte to be measured, the test site to be lanced, or other lancing parameter.

FIG. **77** shows a penetrating member **802** in a cavity **838** with three sensors **808** in the cavity. For ease of illustration, the penetrating member **802** is omitted from the remaining cavities so that the sensor configurations can be more easily seen. Cavity **840** has a channel **826** with two sensors **808**. Cavity **842** has a channel **844** coupled to a single sensor **808**. Cavities **846** and **848** have one and two sensors **808**, respectively. The sensors **808** in those cavities may be located directly at the penetrating member exit from the cartridge or substantially at the penetrating member exit. Other sensor configurations are also possible, such as but not limited to, placing one or more sensors on a side wall of the cavity, placing the sensors in particular arrays (for example, a linear array, triangular array, square array, etc. . . .) on the side wall or bottom surface, using mixed types of sensors (for example, electrochemical and optical, or some other combination), or mixed positioning of sensors (for example, at least one sensor on the substrate below the cartridge and at least one sensor in the cavity).

FIG. **78** shows an embodiment of cartridge **800** where the sensor **850** is located near the distal end of cavity **806**. The sensor **850** may be formed, deposited, or otherwise attached there to the cartridge **800**. In another embodiment, the sensor **850** may be a well or indentation having a bottom with sufficient transparency to allow an optical sensor to detect analytes in fluid deposited in the well or indentation. The well or indentation may also include some analyte reagent that reacts (fluoresces, changes colors, or presents other detectable qualities) when body fluid is placed in the well. In a still further embodiment, sensor **850** may be replaced with a through hole that allow fluid to pass there through. A sensor **808** on a substrate **822** may be attached to the underside of the cartridge **800**, accessing fluid passing from the cavity **806** down to the sensor **808**.

As mentioned above, the sensors **808** may also be placed right at the immediate vicinity or slightly setback from the module opening receiving blood so that low blood volumes will still reach the sensor. The sensors **808** may be used with low volumes such as less than about 1 microliter of sample, preferably less than about 0.6 microliter, more preferably less than about 0.3 microliter, and most preferably less than about 0.1 microliter of sample. Sensors **808** may also be directly printed or formed on the bottom of the penetrating member cartridge **800**. In one embodiment, a multiplicity of miniaturized sensor fields may be placed on the floor of the radial cavity or on the microfluidic module to allow many tests on a single analyte form a single drop of blood to improve accuracy and precision of measurement. Although not limited in this manner, additional sensor fields or regions may also be included for calibration or other purposes.

Referring now to FIGS. **79-84**, further embodiments of the cartridge **800** will now be described. FIG. **79** shows a cartridge **860** having a half-circular shape. FIG. **80** shows a cartridge **862** in the shape of a partial curve. FIG. **80** also shows that the cartridges **862** may be stacked in various configurations such as vertically, horizontally, or in other orientations. FIG. **81** shows a cartridge **864** having a substantially straight, linear configuration. FIG. **82** shows a plurality of cartridges **864** arranged to extend radially outward from a center **866**. Each cartridge may be on a slide (not shown for simplicity) that allows the cartridge **864** to slide radially outward to be aligned with a penetrating member launcher. After use, the cartridge **864** is slide back towards the center **866** and the entire assembly is rotated as indicated by arrow **868** to bring a new cartridge **864** into position for use with a penetrating member driver. FIG. **83** shows a still further embodiment where a plurality of cartridges **800** may be stacked for use with a penetrating member driver (see FIG. **85**). The driver may be moved to align itself with each cartridge **800** or the cartridges may be moved to alight themselves with the driver. FIG. **84** shows a still further embodiment where a plurality of cartridge **864** are coupled together with a flexible support to define an array. A roller **870** may be used to move the cartridges **864** into position to be actuated by the penetrating member driver **872**.

Referring now to FIG. **85**, one embodiment of an apparatus **880** using a radial cartridge **800** with a penetrating member driver **882** is shown. A contoured surface **884** is located near a penetrating member exit port **886**, allowing for a patient to place their finger in position for lancing. Although not shown, the apparatus **880** may include a human readable or other type of visual display to relay status to the user. The display may also show measured analyte levels or other measurement or feedback to the user without the need to plug apparatus **880** or a separate test strip into a separate analyte reader device. The apparatus **880** may include a processor or other logic for actuating the penetrating member or for measuring the analyte levels. The cartridge **800** may be loaded into the apparatus **880** by opening a top housing of the apparatus which may be hinged or removably coupled to a bottom housing. The cartridge **800** may also drawn into the apparatus **880** using a loading mechanism similar in spirit to that found on a compact disc player or the like. In such an embodiment, the apparatus may have a slot (similar to a CD player in an automobile) that allows for the insertion of the cartridge **800** into the apparatus **880** which is then automatically loaded into position or otherwise seated in the apparatus for operation therein. The loading mechanism may be mechanically powered or electrically powered. In some embodiments, the loading mechanism may use a loading tray in addition to the slot. The slot may be placed higher on the housing so that the cartridge **800** will have enough clearance to be loaded into the device and then dropped down over the penetrating member driver **882**. The cartridge **800** may have an indicator mark or indexing device that allows the cartridge to be properly aligned by the loading mechanism or an aligning mechanism once the cartridge **800** is placed into the apparatus **880**. The cartridge **800** may rest on a radial platform that rotates about the penetrating member driver **882**, thus providing a method for advancing the cartridge to bring unused penetrating members to engagement with the penetrating member driver. The cartridge **800** on its underside or other surface, may shaped or contoured such as with notches, grooves, tractor holes, optical markers, or the like to facilitate handling and/or indexing of the cartridge. These shapes or surfaces may also be varied so as to indicate that the cartridge is almost out of unused penetrating members, that there are only five penetrating members left, or some other cartridge status indicator as desired.

A suitable method and apparatus for loading penetrating members has been described previously in commonly assigned, copending U.S. patent applications 60/383,706 and 60/393,707, and are included here by reference for all purposes. Suitable devices for engaging the penetrating members and for removing protective materials associated with the penetrating member cavity are described in commonly assigned, copending U.S. patent applications 60/422,988 and 60/424,429, and are included here by reference for all purposes. For example in the embodiment of FIG. **78**, the foil or seal layer **820** may cover the cavity by extending across the cavity along a top surface **890** and down along the angled surface **892** to provide a sealed, sterile environment for the penetrating member and sensors therein. A piercing element described in U.S. patent application 60/424,429 has a piercing element and then a shaped portion behind the element which pushes the foil to the sides of the cavity or other position so that the penetrating member **802** may be actuated and body fluid may flow into the cavity.

Referring now to FIG. **86**, a still further embodiment of a lancing system according to the present invention will be described. A radial cartridge **500** may be incorporated for use with a penetrating member driver **882**. A penetrating member may be driven outward as indicated by arrow **894**. A plurality of analyte sensors are presented on a roll **895** that is laid out near a penetrating member exit. The roll **895** may be advanced as indicated by arrow **896** so that used analyte sensors are moved away from the active site. The roll **895** may also be replaced by a disc holding a plurality of sensors, wherein the sensor disc (not shown) is oriented in a plane substantially orthogonal to the plane of cartridge **500**. The sensor disc may also be at other angles not parallel to the plane of cartridge **500** so as to be able to rotate and present new, unused sensor in sequence with new unused penetrating members of cartridge **500**.

Referring now to FIG. **87**A, the cartridge **500** provides a high density packaging system for a lancing system. This form factor allows a patient to load a large number penetrating members through a single cartridge while maintaining a substantially handheld device. Of course such a cartridge **500** may also be used in non-handheld devices. The present cartridge **500** provide a high test density per volume of the disposable. For embodiments of a cartridge that includes sensors in addition to penetrating members such as cartridge **800**, the density may also be measured in terms of density of sensors and penetrating members in a disposable. In other embodiments, the density may also be expressed in terms of sensors per disposable. For example, by taking the physical volume of one embodiment or the total envelope, this number can be divided by the number of penetrating members or number of tests. This result is the volume per penetrating member or per test in a cassetted fashion. For example, in one embodiment of the present invention, the total volume of the cartridge **500** is determined to be 4.53 cubic centimeters. In this one embodiment, the cartridge **500** holds 50 penetrating members. Dividing the volume by 50, the volume per test is arrived at 0.090 cubic centimeters. Conventional test devices such as drum is in the range of 0.720 or 0.670 cubic centimeters and that is simply the volume to hold a plurality of test strips. This does not include penetrating members as does the present embodiment **800**. Thus, the present embodiment is at a substantially higher density. Even a slightly lower density device having penetrating members and sensors in the 0.500 cubic centimeter range would be a vast improvement over

known devices since the numbers listed above for known devices does not include penetrating members, only packaging per test strip.

Referring now to FIG. **87**B, a still further embodiment of a cartridge according to the present invention will now be described. FIG. **87**B shows a cross-section of a conical shaped cartridge with the penetrating member being oriented in one embodiment to move radially outward as indicated by arrow **897**. In another embodiment, the penetrating member may be oriented to move radially inward as indicated by arrow **895**. The gripper may be positioned to engage the penetrating member from an inner surface or an outer surface of the cartridge.

Referring now to FIG. **88**, nanowires may also be used to create low volume sensors used with the cartridge **800**. Further details of a nanowire device is described in commonly assigned, copending U.S. Provisional patent application Ser. No. 60/433,286 filed Dec. 13, 2002, fully incorporated herein by reference for all purposes. These nanowire sensors **898** may be incorporated into the cavity **806** housing the penetrating member **802**. They may be placed on the floor or bottom surface of the cavity **806**, on the wall, on the top surface, or any combinations of some or all of these possibilities. The sensors **898** may be designed to have different sensitivity ranges so as to enhance the overall sensitivity of an array of such sensors. Methods to achieve this may include, but are not limited to, using nanowires of varying sizes, varying the number of nanowires, or varying the amount of glucose oxidase or other glucose detection material on the nanowires. These nanowire sensors may be designed to use low volumes of body fluid for each sample, due to their size. In some embodiments, each of the sensors are accurate using volumes of body fluid sample less than about 500 nanoliters. In some embodiments, each of the sensors are accurate using volumes of body fluid sample less than about 300 nanoliters. In still other embodiments, each sensor is accurate with less than about 50 nanoliters, less than about 30 nanoliters, less than about 10 nanoliters, less than about 5 nanoliters, and less than about 1 nanoliters of body fluid sample. In some embodiments, the combined array of sensors uses less than 300 nanoliters of body fluid to arrive at an analyte measurement.

Referring now to FIG. **89**, a still further embodiment of the present invention will be described. FIG. **89** shows one embodiment of an optical illumination system **910** for use with optical analyte sensors (FIG. **91**) that may be in contact with a body fluid sample. The overall system may include a plurality of analyte sensors which provide some optical indicator, a light source **912** for providing light to shine on the sensors, at least one light detector **914**, and a processor (not shown). The sensor or sensors are exposed to a sample of the fluid of unknown composition. A plurality of sensors may be arranged into an array of sensors exposed to one fluid sample, each group targeting a specific analyte and may contain an analyte-specific chemical that interacts more specifically with one analyte than with some other analytes to be analyzed. Each sensor may also have different sensitivity ranges so as to maximize overall sensitivity of an array of such sensors. The light source **912** shines light on at least one sensor to cause light interaction. The differences in the sensors may lead to differences in the light interaction. The light detector detects the light interaction by the sensors. The processor analyzes the light interaction by the sensors to take into account interference in light interaction among the analytes, thereby determining the concentration of the desired analyte in the fluid.

Referring still to the embodiment of FIG. **89**, the light source **912** may be but is not limited to an LED. An alternative LED **915** may also be used with the present invention. Light, illumination, or excitation energy from LED **912** travels along a path through a pinhole **916**, a filter **917**, and a lens **918**. The light then comes into contact with a beamsplitter **919** such as a dichroic mirror or other device useful for beamsplitting. The light is then directed towards lens **920** as indicated by arrow **921**. The lens **920** focuses light onto the sensor (FIG. **91**). This excitation energy may cause a detectable optical indicator from the sensor. By way of example and not limitation, fluorescence energy may be reflected bay up the lens **920**. This energy passes through the beamsplitter **919** and to lens **922** which is then received by detector **914** as indicated by arrow **923**. The detector **914** measures the energy and this information is passed on to the processor (not shown) to determine analyte levels. The illumination system **910** may also include cells **924** on the disc surface. In this specific embodiment, a penetrating member **925** drive by a force generator **926** such as but not limited to a solenoid may be used to obtain the fluid sample. A detent **927** may also be included with the device along with other bare lancets or penetrating members **928**.

Referring now to FIG. **90**, another embodiment of the illumination system **910** is shown for use with a cartridge **929**. Cartridge **929** is similar to cartridge **800**. Cartridge **929** is a single cartridge having a plurality of penetrating members and a plurality of optical sensors (not shown). The cartridge **929** further includes a plurality of optically transparent portions **930** which may be but is not limited to windows or the like for the light from LED **912** to shine into a cavity of the cartridge **929**. In one embodiment, each cavity of the cartridge **929** may include at least one transparent portion **930**. This allows the light to generate energy that may be read by sensor **914**. The cartridge **929** may be used a driver **882** to actuate penetrating members and the cartridge **929** may rotate as indicated by arrow **931**.

Referring now to FIG. **91**, a cross-section of a similar embodiment of the illumination system is shown. This system **932** has source **912** with a lens **933** having an excitation filter **934**. This excitation filter **934**, in one embodiment, only allows excitation energy to pass. This filter **934** allows the excitation energy to pass to dichroic mirror **935**, but does not let it return to source **912**. Excitation energy is reflected down as indicated by arrow **936**. Lens **937** focuses the energy to optical analyte sensor **938**. Fluorescence energy **939** passes through the dichroic mirror **935** and towards a fluorescent filter **940**. In one embodiment, the fluorescent filter **940** only allows fluorescent energy to pass through to lens **941**. Thus, the detector **914** only receives fluorescent energy from the sensor **938**. It should be understood of course, that the filter may be changed to allow the type of energy being generated by sensor **938** to pass. In some embodiments, no filter may be used. The dichroic mirror **935** may be a Bk7 substrate, 63×40×8 mm. The filters may also be a Bk7 substrate about 40 mm in diameter and about 6 mm thick. The lens **933**, **937**, and **941** may be achormat:bfl=53.6, working aperture 38 mm.

Referring now to FIG. **92**, a still further embodiment of an illumination system **942** will be described. This system does not use a beamsplitter or dichroic mirror. Instead, both the source or LED **912** and detector **914** have direct line of sight to the optical analyte sensor **938**. In this embodiment, multiple elements are combined into a single housing. For example, lens **943**, lens **944**, and filter **945** are combined while lens **946**, lens **947**, and filter **948** are also combined.

Referring now to FIG. **93**, a cross-section of a system similar to that of FIG. **89** is shown in a housing **950**. LED **912** sends light to mirror **919** to a light path **951** to cells **924** on a surface of the disc. A finger access **952** allows a sample to be obtained and flow along a fluid pathway **953** to be analyzed. A processor **954** may be coupled to detector **914** to analyze the results.

Referring now to FIG. **94**, a cross-section of a system similar to that of FIG. **90** will be further described. This shows a cartridge **929** used with a driver **882**. This allows for a radial design where the penetrating members extend radially outward as indicated by arrow **955**. The driver **882** may have a coupler portion that reciprocates as indicated by arrow **956**. FIGS. **95** and **96** provide further views of a system similar to that of FIG. **89**. The embodiment of FIGS. **95** and **96** may include additional lenses or filters as may be useful to refine energy detection.

While the invention has been described and illustrated with reference to certain particular embodiments thereof, those skilled in the art will appreciate that various adaptations, changes, modifications, substitutions, deletions, or additions of procedures and protocols may be made without departing from the spirit and scope of the invention. For example, with any of the above embodiments, the location of the penetrating member drive device may be varied, relative to the penetrating members or the cartridge. With any of the above embodiments, the penetrating member tips may be uncovered during actuation (i.e. penetrating members do not pierce the penetrating member enclosure or protective foil during launch). With any of the above embodiments, the penetrating members may be a bare penetrating member during launch. With any of the above embodiments, the penetrating members may be bare penetrating members prior to launch as this may allow for significantly tighter densities of penetrating members. In some embodiments, the penetrating members may be bent, curved, textured, shaped, or otherwise treated at a proximal end or area to facilitate handling by an actuator. The penetrating member may be configured to have a notch or groove to facilitate coupling to a gripper. The notch or groove may be formed along an elongate portion of the penetrating member. With any of the above embodiments, the cavity may be on the bottom or the top of the cartridge, with the gripper on the other side. In some embodiments, sensors may be printed on the top, bottom, or side of the cavities. The front end of the cartridge maybe in contact with a user during lancing. The same driver may be used for advancing and retraction of the penetrating member. The penetrating member may have a diameters and length suitable for obtaining the blood volumes described herein. The penetrating member driver may also be in substantially the same plane as the cartridge. The driver may use a through hole or other opening to engage a proximal end of a penetrating member to actuate the penetrating member along a path into and out of the tissue.

Any of the features described in this application or any reference disclosed herein may be adapted for use with any embodiment of the present invention. For example, the devices of the present invention may also be combined for use with injection penetrating members or needles as described in commonly assigned, copending U.S. patent application Ser. No. 10/127,395 filed Apr. 19, 2002. A sensor to detect the presence of foil may also be included in the lancing apparatus. For example, if a cavity has been used before, the foil or sterility barrier will be punched. The sensor can detect if the cavity is fresh or not based on the status of the barrier. It should be understood that in optional embodiments, the sterility barrier may be designed to pierce a sterility barrier of thickness that does not dull a tip of the penetrating member. The lancing apparatus may also use improved drive mechanisms. For example, a solenoid force generator may be improved to try to increase the amount of force the solenoid can generate for a given current. A solenoid for use with the present invention may have five coils and in the present embodiment the slug is roughly the size of two coils. One change is to increase the thickness of the outer metal shell or windings surround the coils. By increasing the thickness, the flux will also be increased. The slug may be split; two smaller slugs may also be used and offset by ½ of a coil pitch. This allows more slugs to be approaching a coil where it could be accelerated. This creates more events where a slug is approaching a coil, creating a more efficient system.

In another optional alternative embodiment, a gripper in the inner end of the protective cavity may hold the penetrating member during shipment and after use, eliminating the feature of using the foil, protective end, or other part to retain the used penetrating member. Some other advantages of the disclosed embodiments and features of additional embodiments include: same mechanism for transferring the used penetrating members to a storage area; a high number of penetrating members such as 25, 50, 75, 100, 500, or more penetrating members may be put on a disk or cartridge; molded body about a lancet becomes unnecessary; manufacturing of multiple penetrating member devices is simplified through the use of cartridges; handling is possible of bare rods metal wires, without any additional structural features, to actuate them into tissue; maintaining extreme (better than 50 micron-lateral- and better than 20 micron vertical) precision in guiding; and storage system for new and used penetrating members, with individual cavities/slots is provided. The housing of the lancing device may also be sized to be ergonomically pleasing. In one embodiment, the device has a width of about 56 mm, a length of about 105 mm and a thickness of about 15 mm. Additionally, some embodiments of the present invention may be used with non-electrical force generators or drive mechanism. For example, the punch device and methods for releasing the penetrating members from sterile enclosures could be adapted for use with spring based launchers. The gripper using a frictional coupling may also be adapted for use with other drive technologies.

Still further optional features may be included with the present invention. For example, with any of the above embodiments, the location of the penetrating member drive device may be varied, relative to the penetrating members or the cartridge. With any of the above embodiments, the penetrating member tips may be uncovered during actuation (i.e. penetrating members do not pierce the penetrating member enclosure or protective foil during launch). The penetrating members may be a bare penetrating member during launch. The same driver may be used for advancing and retraction of the penetrating member. Different sensors detecting different ranges of glucose concentration, different analytes, or the like may be combined for use with each penetrating member. Non-potentiometric measurement techniques may also be used for analyte detection. For example, direct electron transfer of glucose oxidase molecules adsorbed onto carbon nanotube powder microelectrode may be used to measure glucose levels. In all methods, nanoscopic wire growth can be carried out via chemical vapor deposition (CVD). In all of the embodiments of the invention, preferred nanoscopic wires may be nanotubes. Any method useful for depositing a glucose oxidase or other analyte detection material on a nanowire or nanotube may be used with the present invention. This application cross-references commonly assigned copending U.S. patent application Ser. No. 10/323,623 filed Dec. 18, 2002; commonly assigned copending U.S. patent application

Ser. No. 10/323,624 filed Dec. 18, 2002; and commonly assigned copending U.S. patent application Ser. No. 10/324,053 filed Dec. 18, 2002. All applications listed above are fully incorporated herein by reference for all purposes. Expected variations or differences in the results are contemplated in accordance with the objects and practices of the present invention. It is intended, therefore, that the invention be defined by the scope of the claims which follow and that such claims be interpreted as broadly as is reasonable.

What is claimed is:

1. A multi-lancet cartridge, comprising:

a radial cartridge housing;

a driver is configured to be coupled penetrating members in the cartridge housing;

a carrier rotationally received in the cartridge housing;

a plurality of penetrating members carried by the carrier, each of said penetrating members having a penetrating member body and a penetrating member tip extending from the body, each of the penetrating members being configured to be coupled to a sample chamber,

an advancement device configured to move the carrier in a rotational movement in preparation of placing a respective one of said penetrating members in an active position for being launched to a tissue site;

at least one penetrating member sterility barrier that provides a sterile environment for a tip of a respective one of said penetrating members;

a device that causes a breach of at least a portion of the sterility barrier to be out of a path of travel from the respective penetrating member upon launch of the penetrating member while at an active position to allow the tip of the penetrating member to exit without piercing the sterility barrier; Wherein the cartridge housing has a single penetrating member opening that defines the active penetrating member position, wherein the tip of the active positioned penetrating member extends through the single penetrating member opening during its launch stroke; wherein the penetrating members are radially arranged in the cartridge that includes indexing; and wherein the cartridge housing has a penetrating member launch channel that receives and guides the active positioned penetrating member in its launch stroke, wherein the launch channel and the single penetrating member opening are aligned and cooperatively define the active penetrating member position.

2. The cartridge of claim **1**, wherein the penetrating members are radially arranged on the carrier.

3. The cartridge of claim **1**, wherein the cartridge housing has a launch channel that receives and guides the active-positioned penetrating member in its launch stroke, wherein the launch channel defines the active penetrating member position.

4. The cartridge of claim **1**, wherein the penetrating members and the carrier have cooperating engagement surfaces that prevent the penetrating members from moving radially except when in the active penetrating member position.

5. The cartridge of claim **1** wherein the cartridge housing has the penetrating member launch channel that receives and guides the active-positioned penetrating member in its launch stroke, wherein the penetrating member launch channel defines the active penetrating member position, and wherein the penetrating member launch channel extends through the circular foot channel to permit the active- positioned penetrating member to move radially in its launch stroke.

6. The cartridge of claim **1**, wherein the carrier has an array of radial guide channels that receive and guide the penetrating members in their launch strokes when the penetrating members are sequentially advanced into the active position.

* * * * *